THIS IS SCHEDULE PART 15 REFERRED TO IN THE FOREGOING AGREEMENT BETWEEN TIE AND THE INFRACO

USB00000079_0001

SCHEDULE PART 15

PROGRAMME

The Programme consists of the following documents:

- Infraco Construction Programme
- The Programming Assumptions
- Relaxations to the CoCP constraints assumed by BBS in their construction programme as annotated and agreed with **tie**
- On Street Construction Works Methodology
- SDS Design Delivery Programme V26
- SDS Consents Programme (derived from the SDS Design Delivery Programme V26)

The On Street Construction Works Methodology provides details of how Infraco will deliver its works in the city centre sections of the route, including proposed traffic diversions, and has been agreed between the Parties and CEC. The Infraco Construction Programme is based on the On Street Construction Works Methodology and it is one of the programming assumptions.

The Infraco Construction Programme dated 29/04/08 is based on V26 of the SDS design programme. Since this programme was produced, SDS has provided an update to the design programme.

It was agreed that any variation between the SDS Design Delivery Programme and the Infraco Construction Programme would be dealt with as a Notified Departure to the extent that such variation adversely affects the achievement of the Infraco Construction Programme.

Explanatory Note:-.

Rather than to fully align the BBS Construction Programme with the SDS Design Delivery Programme prior to Contract award, both parties agreed that the contract would be based on V26 of the SDS design programme, along with a mitigation plan to deal with movement to the SDS design programme which had potential to impact on the BBS construction programme.

INFRACO CONTRACT PROGRAMME

EDINBURGH TRAM NETWORK

BILFINGER BERGER Civil

SIEMENS

Activity ID	Activity Name	Original Duration	Start	Finish	Total Float
Edinburgh Tram Contract Programme 29 April 2008		933	28-Sep-07	16-Jul-11	0
Design Stage Consents		121	28-Sep-07	31-Mar-08	235
A17260	Forth Ports	100	28-Sep-07	28-Feb-08	20
A17270	Network Rail	100	28-Sep-07	28-Feb-08	7
A17300	British Airports Authority	75	28-Sep-07	24-Jan-08	70
A17310	Stakis Hotels	100	28-Sep-07	28-Feb-08	256
A17320	Other 3rd Parties	100	28-Sep-07	28-Feb-08	174
A17330	Network Rail APA	0		31-Mar-08*	0
TIE Consents		100	28-Sep-07	28-Feb-08	669
A17280	Obtain TTRO's	100	28-Sep-07	28-Feb-08	126
A17290	Obtain TRO's	100	28-Sep-07	28-Feb-08	669
Advanced Works Contract		149	01-Oct-07	12-May-08	783
161	Award Advanced Works/Mobilisation Contract	0	01-Oct-0		32
Finalise Contract in Accordance with Draft Deal		120	01-Oct-07	31-Mar-08	9
A1000	Staff And Office Running Costs	116	01-Oct-07	11-Mar-08	24
A1010	Instruct Legal Advise	75	05-Nov-(	29-Feb-08	29
A1020	Instruct Remeasurement of Quantities for Fixed Pric	75	05-Nov-(	29-Feb-08	29
A1030	Integration of the Execution Schedules of SDS, TRA	55	03-Dec-(	29-Feb-08	29
A1040	Method Statement	65	17-Dec-(	31-Mar-08	9
A1050	Insurance Certificate	5	17-Dec-(	21-Dec-07	69
A1060	Advance Works Programme	6	04-Feb-(	11-Feb-08	43
Mobilise Personnel / Project Management		95	05-Nov-07	31-Mar-08	9
A1070	Project Staff Salaries and Expenses	106	05-Nov-(	31-Mar-08	9
A1080	Recruitment Fees	80	26-Nov-(	31-Mar-08	9
A1120	Develope Quality Assurance Manual	60	07-Jan-0	31-Mar-08	9
A17220	Develop Project Manual (E&M Part)	60	07-Jan-0	31-Mar-08	9
A17230	Develop Manual for E & M Project Management an	60	07-Jan-0	31-Mar-08	9
A17240	Develop Manual for Documentation Management	60	07-Jan-0	31-Mar-08	9
Review of SDS Design by BBS		75	05-Nov-07	29-Feb-08	29
A1240	Benaim (Value Engineering)	20	05-Nov-(	30-Nov-07	84
A1250	Review of Operation Concept	75	05-Nov-(	29-Feb-08	29
A1260	Review of Overall System Design Concepts	75	05-Nov-(	29-Feb-08	29
A1265	Review of Commissioning Procedures	75	05-Nov-(	29-Feb-08	29
A1270	Review of System Design for E & M LOTS	75	05-Nov-(	29-Feb-08	29
A1290	Finalisation of RST Parameters	75	05-Nov-(	29-Feb-08	29
Undertake Procurement Activities		15	11-Feb-08	29-Feb-08	29
A1130	Place Order for Main Project Office Units	5	11-Feb-(	15-Feb-08	39
A1140	Place Order for BT Office Connection	5	11-Feb-(	15-Feb-08	39
A1150	Place Order for SP Office Power Connection	5	11-Feb-(	15-Feb-08	39
A1160	Place Advance Works Order with BARR Constructi	5	18-Feb-(	22-Feb-08	34
A1170	Place Advacne Works Order with RJ MCLEOD	5	18-Feb-(	22-Feb-08	34
A1180	Place Advance Works Order with FARRANS	5	18-Feb-(	22-Feb-08	34
A1190	Place Advance Works Order with GRAHAMS	5	18-Feb-(	22-Feb-08	34
A1200	Place Advance Works order with AN Other	5	25-Feb-(	29-Feb-08	29

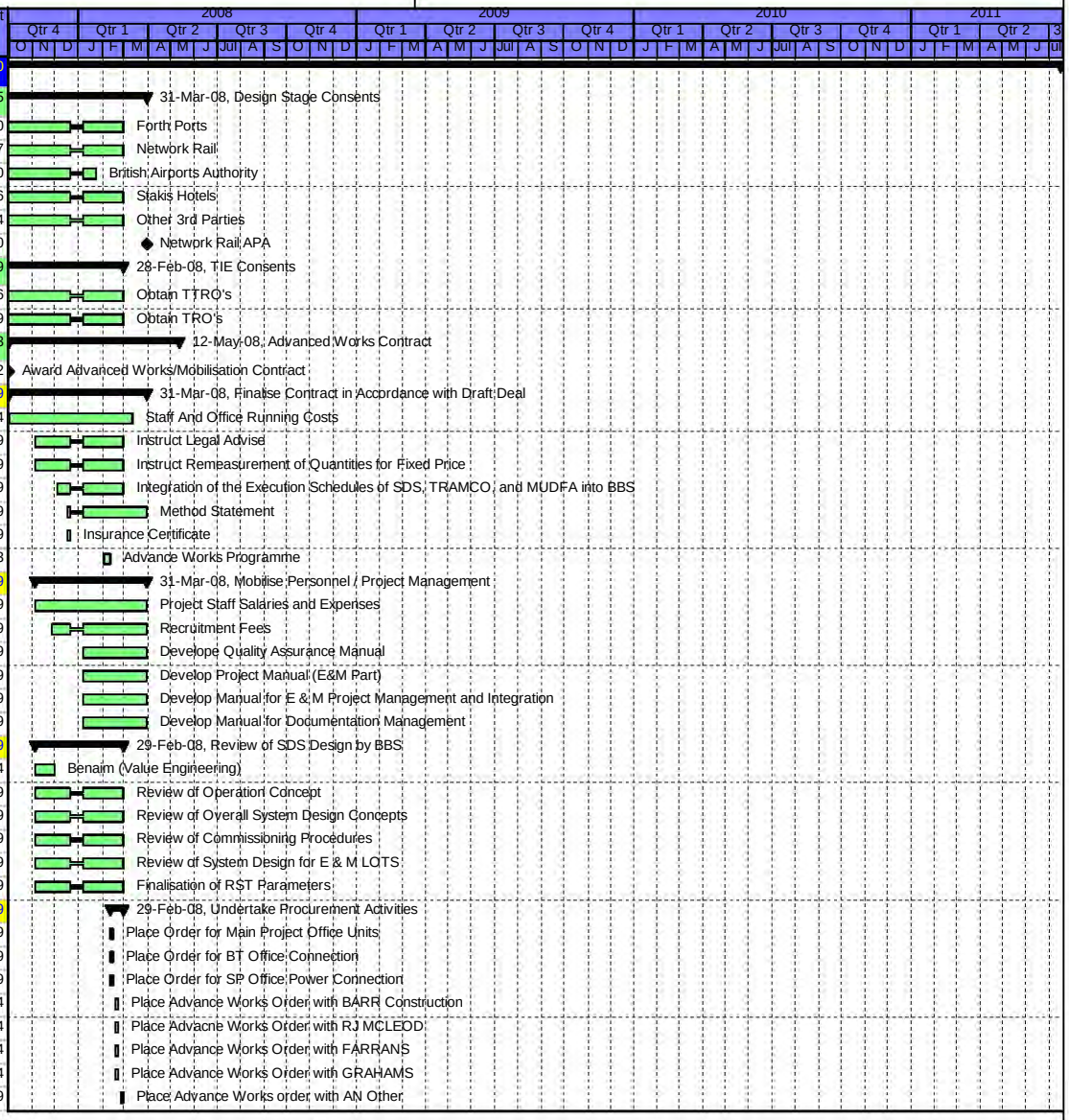

Date	Revision	Checked	Approved
29-Apr-08	Contract Programme 29 April 2008	SCS	

USB00000080_0001

Activity ID	Activity Name	Original Duration	Start	Finish	Total Float
A1210	Place Advance Works Order with AN Other	5	25-Feb-(	29-Feb-08	29
A1220	Place Order for Temporary Generator and Fuel Ta	5	18-Feb-(	22-Feb-08	34
A1230	Place Order for IT Hardware and Software	5	18-Feb-(	22-Feb-08	34
Establish Site Offices		10	24-Mar-08	04-Apr-08	5
A1370	Build Offices	5	24-Mar-(	28-Mar-08	10
A1380	Fit Out Offices	10	24-Mar-(	04-Apr-08	5
Set Up Site		19	17-Mar-08	11-Apr-08	0
A1300	Commence Sewer Connection	10	24-Mar-(	04-Apr-08	5
A1310	Security Fence and Light	10	24-Mar-(	04-Apr-08	5
A1320	Car Park and Access	15	17-Mar-(	07-Apr-08	4
A1340	Plinth for Generator	5	17-Mar-(	24-Mar-08	14
A1350	Temporary Generator and Fuel Bowser	5	24-Mar-(	28-Mar-08	10
A1360	Install Foundations for Office Units	20	17-Mar-(	11-Apr-08	0
Interface Allocation and Clarification between BBS, SDS, TRAMCO		75	05-Nov-07	29-Feb-08	29
A1580	Interface Allocation and Clarification between BBS, !	75	05-Nov-(	29-Feb-08	29
Advance Construction Works		49	03-Mar-08	12-May-08	66
A1520	Site Clearance Area 7 (trees and bushes)	10	03-Mar-(	14-Mar-08	19
A1525	Site Clearance Area 5 (trees and bushes)	10	03-Mar-(	14-Mar-08	19
A1530	Temporary Fencing Area 7	20	03-Mar-(	31-Mar-08	9
A1540	Plant Crossing (Castle Gogar Road)	5	03-Mar-(	07-Mar-08	24
A1550	Soil Strip	5	03-Mar-(	07-Mar-08	24
A1560	Excavate (at Depot)	20	03-Mar-(	31-Mar-08	9
A1570	Divert Cycleway at Gogarburn and erect hoarding (	15	03-Mar-(	24-Mar-08	14
A17250	Place Surcharged Embankment (at Gogar East)	15	21-Apr-0	12-May-08	66
Planning and Logistical Activities		95	05-Nov-07	31-Mar-08	812
A1440	SDS	95	05-Nov-(	31-Mar-08	9
A1450	TRAMCO	95	05-Nov-(	31-Mar-08	812
A1460	Network Rail	85	19-Nov-(	31-Mar-08	9
A1470	Carry out Additional GI and Testing	85	19-Nov-(	31-Mar-08	9
A1480	Prepare Management Plans	65	17-Dec-(	31-Mar-08	9
A1490	Prepare INFRACO Contract Programme	45	17-Dec-(	29-Feb-08	29
A1500	Prepare INFRACO Method Statements	65	17-Dec-(	31-Mar-08	9
A1510	Design Temporary Works including TM	65	17-Dec-(	31-Mar-08	9
Key Dates		803	14-Apr-08	16-Jul-11	0
170	AWARD CONTRACT	0	14-Apr-0		0
270	Mobilisation	20	14-Apr-08	12-May-08	16
280	Commence Phase 1a	0	14-Apr-08		1189
281	Construction Completion Phase 1a Edinburgh Airpo	0		09-Nov-10	0
310	Commencement of Revenue Service Phase 1a Edi	0		09-May-11	0
311	Construction Completion Phase 1a Haymarket to N	0		17-Jan-11	0
312.8	Commencement of Revenue Service Phase 1a Hay	0		16-Jul-11	0
313	Section Completion A	0		25-Mar-10	0
314	Section Completion B	0		23-Apr-10	449
315	Section Completion C	0		17-Jan-11	180
325	Section Completion D	0		16-Jul-11	0
Commissioning Phase 1a Edinburgh Airport to Haymark		158	11-Sep-10	09-May-11	48
295	Latest date for first tram on site available for commi	0		11-Sep-10	309
300	System Integration Test; Phase 1a Edinburgh Airpo	30	10-Nov-10	09-Dec-10	0
301	Test Running and Driver Familiarisation; Phase 1a I	30	10-Dec-10	09-Jan-11	0
302	T1 Post Commissioning Test completed; Phase 1a E	0		09-Jan-11	188
302.1	Test Running and Driver familiarisation performanc	30	10-Jan-11	08-Feb-11	0

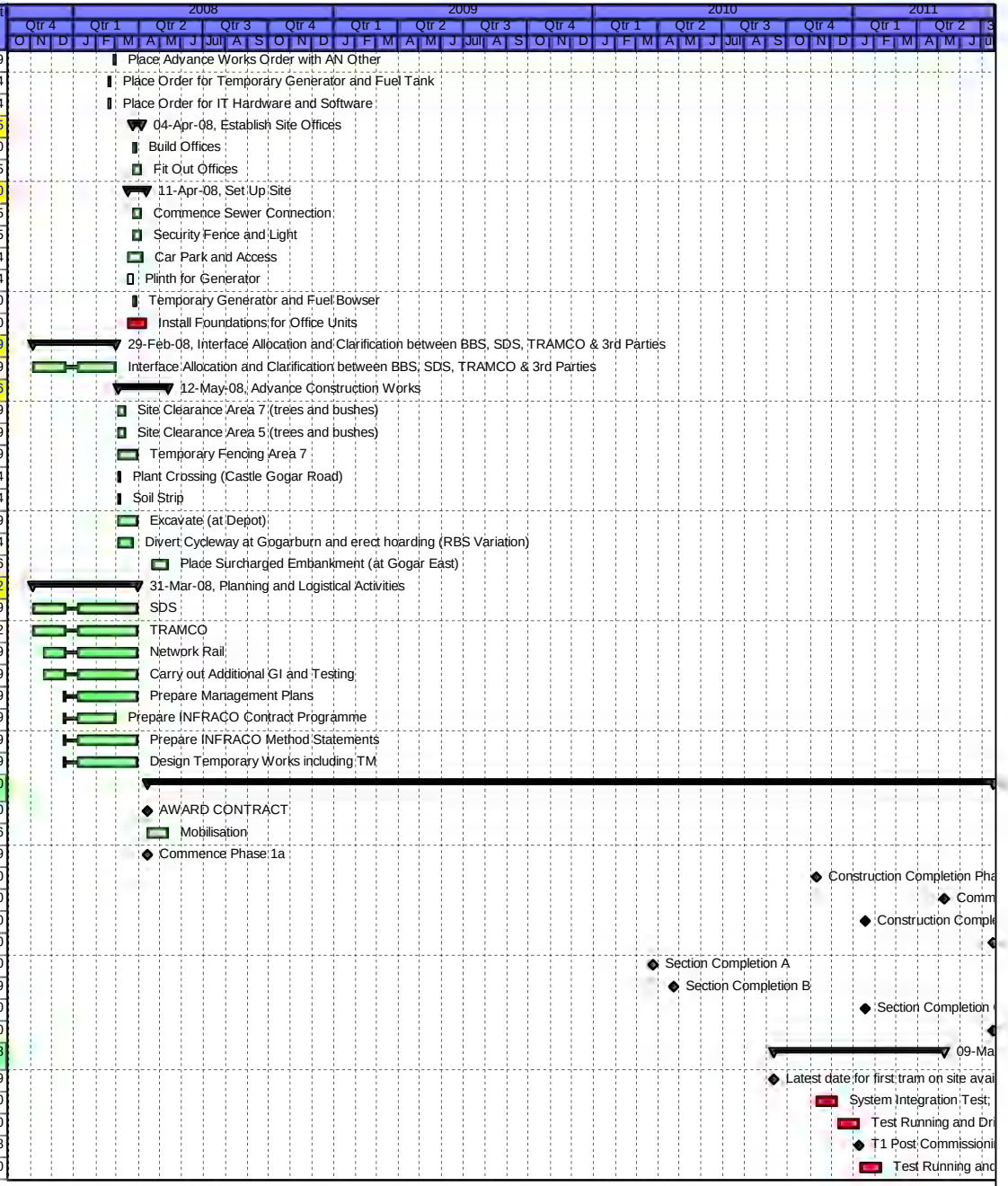

Date	Revision	Checked	Approved
29-Apr-08	Contract Programme 29 April 2008	SCS	

USB00000080_0002

Activity ID	Activity Name	Original Duration	Start	Finish	Total Float
302.2	T2 Performance Test completed; Phase 1a Edinbur	0		08-Feb-11	158
302.3	Approval of HMRI; Phase 1a Edinburgh Airport to H	0		08-Feb-11	158
302.4	Shadow running: Phase 1a Edinburgh Airport to Ha	90	09-Feb-11	09-May-11	0
302.5	T3 Pre-Operations Test Completed; Phase 1a Edin	0		09-May-11	0
Commissioning Phase 1a Haymarket to Newhaven		126	18-Jan-11	16-Jul-11	0
312	System Integration Test; Phase 1a Haymarket to Ne	30	18-Jan-11	16-Feb-11	0
312.1	Test Running and Driver Familiarisation; Phase 1a I	30	17-Feb-11	18-Mar-11	0
312.2	T1 Post Commissioning Test completed; Phase 1a I	0		18-Mar-11	0
312.3	Test Running and Driver familiarisation performanc	30	19-Mar-11	17-Apr-11	0
312.4	T2 Performance Test completed; Phase 1a Haymar	0		17-Apr-11	0
312.5	Approval of HMRI; Phase 1a Haymarket to Newhav	0		17-Apr-11	0
312.6	Shadow running: Phase 1a Haymarket to Newhave	90	18-Apr-11	16-Jul-11	0
312.7	T3 Pre-Operations Test Completed; Phase 1a Hayr	0		16-Jul-11	0
M & E Design		390	29-Feb-08	24-Sep-09	442
740	M & E Requirement Definition Phase Complete	0		01-May-08*	0
750	M & E Preliminary Design Phase	60	01-May-(	30-Jun-08	962
760	M & E Review of Preliminary Design	30	30-Jun-08	30-Jul-08	962
770	M & E Detail Design Phase	90	30-Jul-08	28-Oct-08	962
780	M & E Review of Detailed Design	30	28-Oct-08	27-Nov-08	962
790	M & E Design Freeze	0		27-Nov-08	962
Railway Electrification		390	29-Feb-08	24-Sep-09	56
A17080	SDS Issue Track Alignment Drawings	0		29-Feb-08*	0
A17090	Basic Design TPS	100	17-Mar-08	07-Aug-08	56
A17100	Detail Design TPS	100	14-May-(	02-Oct-08	56
A17110	Basic Design OCS	100	17-Mar-08	07-Aug-08	56
A17120	Detail Design OCS	100	14-May-(	02-Oct-08	56
A17130	Procurement	100	12-Jun-08	30-Oct-08	56
A17140	Manufacturing	260	10-Jul-08	29-Jul-09	56
A17150	Dispatch	240	03-Oct-08	24-Sep-09	56
A17160	SDS Design OLE Foundations	100	26-Jun-08	13-Nov-08	56
MUDFA & UTILITIES		279	05-Nov-07	19-Dec-08	628
180	MUDFA & Utilities work area 1 completion	0	31-Oct-0		3
190	MUDFA & Utilities work area 2 completion	0	01-Aug-(		18
200	MUDFA & Utilities work for sub section 1C	0	31-Oct-0		84
210	MUDFA & Utilities work for sub section 1D	0	19-Dec-(		21
220	MUDFA & Utilities work area 5	0	05-Nov-(		1350
230	MUDFA & Utilities work for sub section 5B	0	11-Apr-0		67
240	MUDFA & Utilitieswork for sub section 5C	0	16-May-(		94
245	Depot SGN Diversion	0		18-Apr-08*	0
255	Depot Watermain Diversion	0		30-May-08*	0
260	MUDFA & Utilities work area 9 completion	0	16-May-(		91
Third Party Notice Periods		395	10-Dec-07	23-Jul-09	487
A14170	ADM Milling	28	06-Oct-08	03-Nov-08	979
A14180	CGM Edinburgh Ltd.	28	23-Jun-08	22-Jul-08	1083
A14190	Forth Ports	28	08-Oct-08	05-Nov-08	977
A14200	ICAS	184	19-Jan-08	22-Jul-08	1083
A14210	Kenmore Capital	28	23-Jun-08	22-Jul-08	1083
A14220	Land Securities Trillium	28	06-Dec-08	05-Jan-09	918
A14230	NULAP	62	20-May-(	22-Jul-08	1083
A14240	Ocean Terminal	28	24-Jun-09	23-Jul-09	720
A14250	Royal Yacht Britannia	28	24-Jun-09	23-Jul-09	720

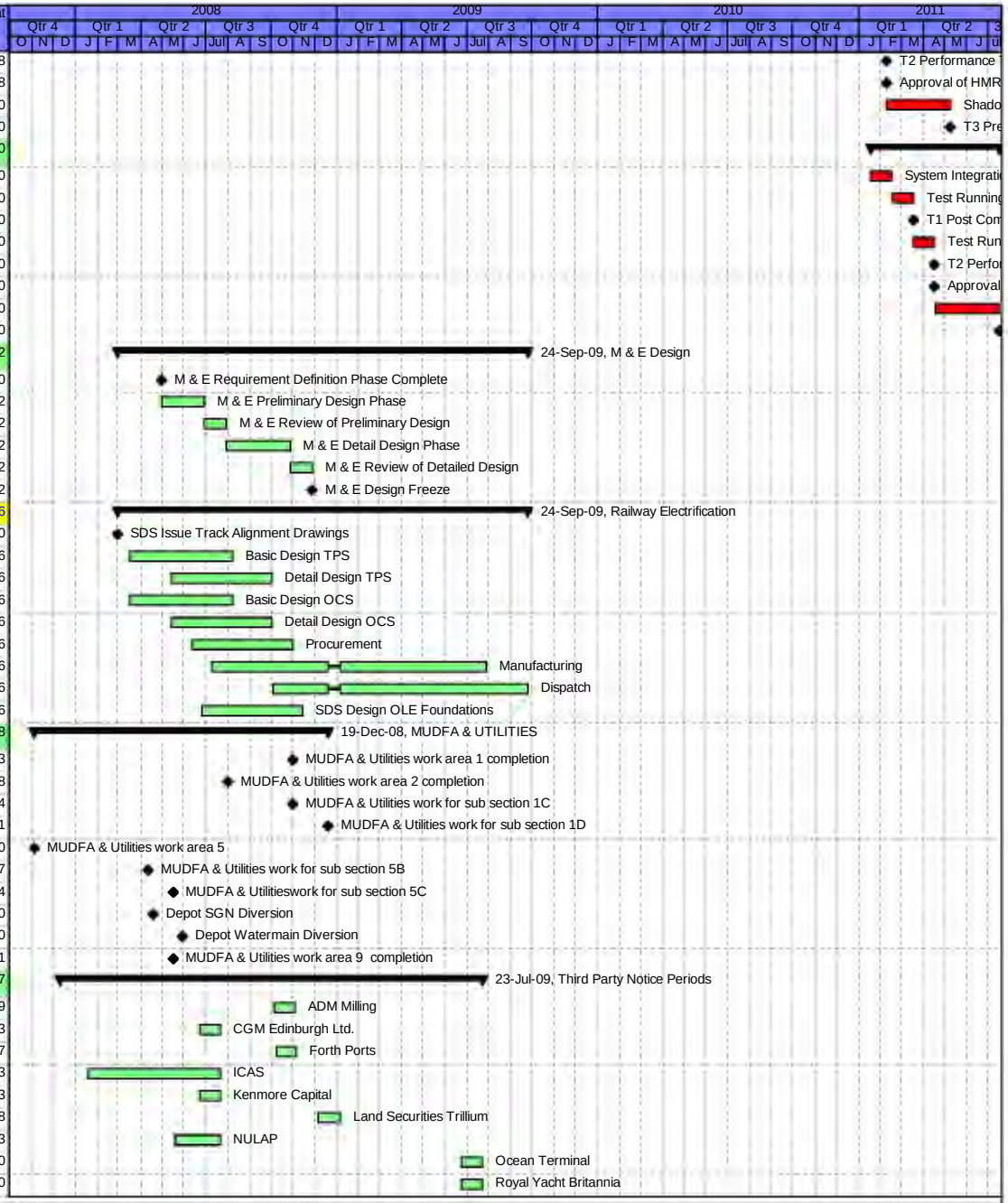

Date	Revision	Checked	Approved
29-Apr-08	Contract Programme 29 April 2008	SCS	

Activity ID	Activity Name	Original Duration	Start	Finish	Total Float
A14260	Trustees of City Point	28	23-Jun-08	22-Jul-08	1083
A14270	Verity Trustees	28	23-Jun-08	22-Jul-08	1083
A14280	CGM Edinburgh Ltd	28	23-Jun-08	22-Jul-08	1083
A14350	BAA	28	15-Apr-08	13-May-08	1152
A14360	Clerical Medical Investment Group	28	26-Jun-08	25-Jul-08	1080
A14370	Jenners (JPSE)	28	19-Jan-09	16-Feb-09	876
A14380	Murrayfield Indoor Sports Centre	28	05-May-(	02-Jun-08	1132
A14390	NEL & EPML	28	09-Jun-08	08-Jul-08	1097
A14400	Royal Mail	28	17-Apr-08	15-May-08	1150
A14410	Safeway - Morrisons	28	06-Aug-08	02-Sep-08	1040
A14420	SRU	28	05-May-(	02-Jun-08	1132
A14430	UGC Properties	28	16-May-(	13-Jun-08	1121
A14440	Universities Superannuation Scheme	28	09-Jun-08	08-Jul-08	1097
A14450	West Craigs Ltd	28	15-Apr-08	13-May-08	1152
A14470	NIL	28	28-Oct-08	25-Nov-08	957
A14500	Adshel	31	14-Apr-08	14-May-08	1150
A14510	BT	28	14-Apr-08	11-May-08	1153
A14520	Cable & Wireless	28	14-Apr-08	11-May-08	1153
A14530	Easynet Telecomms Ltd.	28	14-Apr-08	11-May-08	1153
A14540	Historic Scotland	28	14-Apr-08	11-May-08	1153
A14550	Network rail	28	01-Aug-08	28-Aug-08	1045
A14560	NTL	28	14-Apr-08	11-May-08	1153
A14570	Royal Mail	90	15-Jan-08	14-Apr-08	1181
A14580	Scotrail	28	10-Apr-08	08-May-08	1157
A14590	Scotish Water	28	14-Apr-08	11-May-08	1153
A14600	Thus	28	14-Apr-08	11-May-08	1153
A14610	Transco	28	14-Apr-08	11-May-08	1153
A14620	Roseburn Garage	184	10-Dec-07	13-Jun-08	1121
SECTION 01 NEWHAVEN ROAD TO HAYMARKET		735	14-Mar-08	11-Mar-11	87
Opening Sequence B (Haymarket to Newhaven Road)		735	14-Mar-08	11-Mar-11	87
01A Newhaven Road (inc.) to Foot of the Walk (exc.)		687	28-Mar-08	17-Jan-11	126
E & M Installations		179	21-Apr-10	17-Jan-11	126
Newhaven to Ocean Terminal		51	21-Apr-10	05-Jul-10	254
A16990	Access for visual inspection for E&M wayside installa	0	21-Apr-10		305
A17000	Access for E&M wayside installation (01A)	0	24-May-:		138
A17010	Installation of poles and building fixings	9	24-May-:	04-Jun-10	8
A17020	Overhead Catenary Line	21	07-Jun-10	05-Jul-10	8
A17030	Access for visual inspection to cable pits for cable la	0	21-Apr-10		305
A17040	Access to cable pits for cable laying (01A)	0	24-May-:		284
A17050	Install Electrical Cables	10	24-May-:	07-Jun-10	138
A17060	Install Fibre Optic Cables	10	21-Jun-10	02-Jul-10	129
A17070	Install Signalling Wayside Equipment	10	08-Jun-10	21-Jun-10	138
Ocean Terminal to Foot of the Walk		66	30-Sep-10	17-Jan-11	126
A3883	Access for visual inspection for E&M wayside installa	0	30-Sep-10		192
A3884	Access for E&M wayside installation (01A)	0	01-Nov-10		10
A3885	Installation of poles and building fixings	13	01-Nov-10	17-Nov-10	0
A3890	Overhead Catenary Line	32	18-Nov-10	17-Jan-11	0
A3898	Access for visual inspection to cable pits for cable la	0	30-Sep-10		192
A3899	Access to cable pits for cable laying (01A)	0	01-Nov-10		171
A3900	Install Electrical Cables	15	01-Nov-10	19-Nov-10	10
A3910	Install Fibre Optic Cables	15	03-Dec-10	23-Dec-10	7

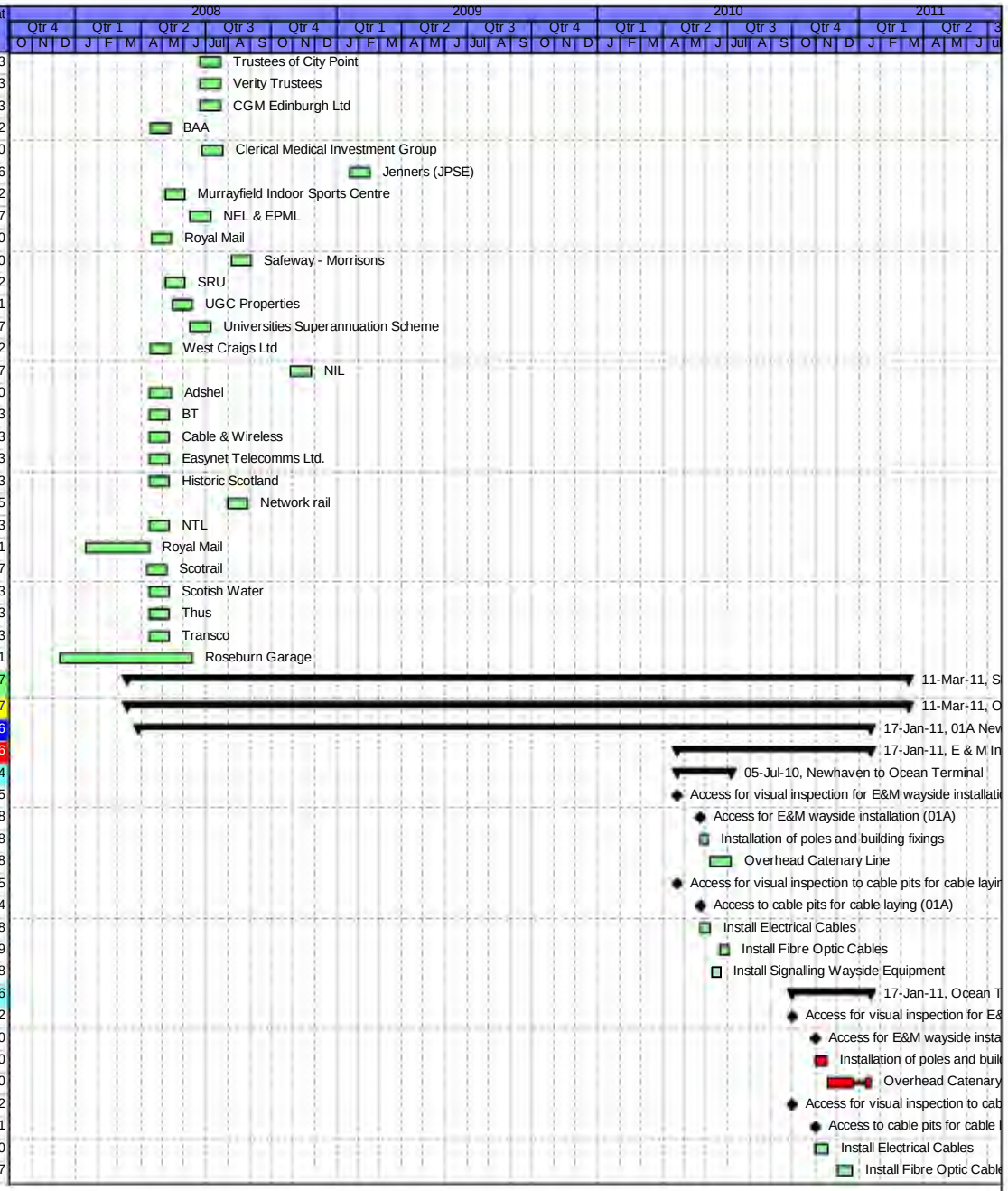

Date	Revision	Checked	Approved
29-Apr-08	Contract Programme 29 April 2008	SCS	

Activity ID	Activity Name	Original Duration	Start	Finish	Total Float
A3920	Install Signalling Wayside Equipment	15	22-Nov-10	13-Dec-10	10
Newhaven Road (inc.) to Ocean Terminal (exc.)		535	23-Jul-08	24-Sep-10	197
Lindsay Road Retaining Walls (W1)		223	23-Jul-08	22-Jun-09	180
11999	SDS Design Complete	0		23-Jul-08*	0
12000	Issue Construction Drawings	0		07-Oct-08*	0
5	Wall B Contiguous Bored Piles	100	05-Nov-08	08-Apr-09	180
A1710	Wall A Reinforced Earth	50	09-Apr-09	22-Jun-09	180
Roadworks		390	03-Oct-08	12-May-10	165
11970	Issue Construction Drawings	0		03-Oct-08*	0
A1090	CH 0000 to 0300	50	02-Mar-10	12-May-10	165
A1100	CH 0300 to 0700	50	03-Sep-09	11-Nov-09	282
A1110	CH 0700 to 0850	203	03-Nov-08	02-Sep-09	156
Trackwork		360	03-Oct-08	29-Mar-10	53
11980	Issue Construction Drawings	0		03-Oct-08*	0
Ch 0-265		77	29-Oct-09	01-Mar-10	73
A15970	Establish Traffic Management & Temp. Fencing	2	29-Oct-09	02-Nov-09	89
A15980	Excavate box	11	02-Nov-09	17-Nov-09	89
A15990	Excavate, lay and concrete ducts	16	17-Nov-09	10-Dec-09	89
A16000	Excavate and construct OLE bases	16	17-Nov-09	10-Dec-09	89
A16010	Set Track (265m)	25	12-Jan-10	15-Feb-10	0
A16020	Place upper concrete and cure	25	15-Jan-10	18-Feb-10	73
A16030	Street Surface finishes	6	19-Feb-10	26-Feb-10	73
A16040	Remove fencing and Traffic Management	1	01-Mar-10	01-Mar-10	73
Ch 265-425		53	19-Jun-09	02-Sep-09	129
A15890	Establish Traffic Management & Temp. Fencing	2	19-Jun-09	23-Jun-09	147
A15900	Excavate box	6	23-Jun-09	01-Jul-09	147
A15910	Excavate, lay and concrete ducts	9	01-Jul-09	14-Jul-09	147
A15920	Excavate and construct OLE bases	9	01-Jul-09	14-Jul-09	147
A15930	Set Track (160m)	11	05-Aug-09	19-Aug-09	4
A15940	Place upper concrete and cure	11	10-Aug-09	24-Aug-09	129
A15950	Street Surface finishes	6	25-Aug-09	01-Sep-09	129
A15960	Remove fencing and Traffic Management	1	02-Sep-09	02-Sep-09	129
Ch 425-475		28	26-Feb-09	06-Apr-09	197
A15810	Establish Traffic Management & Temp. Fencing	2	26-Feb-09	27-Feb-09	12
A15820	Excavate box	2	02-Mar-09	03-Mar-09	12
A15830	Excavate, lay and concrete ducts	3	04-Mar-09	06-Mar-09	12
A15840	Excavate and construct OLE bases	3	04-Mar-09	06-Mar-09	12
A15850	Set Track (50m)	5	20-Mar-09	26-Mar-09	3
A15860	Place upper concrete and cure	5	25-Mar-09	31-Mar-09	197
A15870	Street Surface finishes	3	01-Apr-09	03-Apr-09	197
A15880	Remove fencing and Traffic Management	1	06-Apr-09	06-Apr-09	197
Ch 475-600		42	16-Dec-08	25-Feb-09	12
A15730	Establish Traffic Management & Temp. Fencing	2	16-Dec-08	17-Dec-08	11
A15740	Excavate box	5	18-Dec-08	07-Jan-09	11
A15750	Excavate, lay and concrete ducts	8	08-Jan-09	19-Jan-09	11
A15760	Excavate and construct OLE bases	8	08-Jan-09	19-Jan-09	11
A15770	Set Track (125m)	10	29-Jan-09	11-Feb-09	4
A15780	Place upper concrete and cure	10	03-Feb-09	16-Feb-09	12
A15790	Street Surface finishes	6	17-Feb-09	24-Feb-09	12
A15800	Remove fencing and Traffic Management	1	25-Feb-09	25-Feb-09	12
Ch 600-700		30	03-Nov-08	15-Dec-08	11
A15650	Establish Traffic Management & Temp. Fencing	2	03-Nov-08	04-Nov-08	0

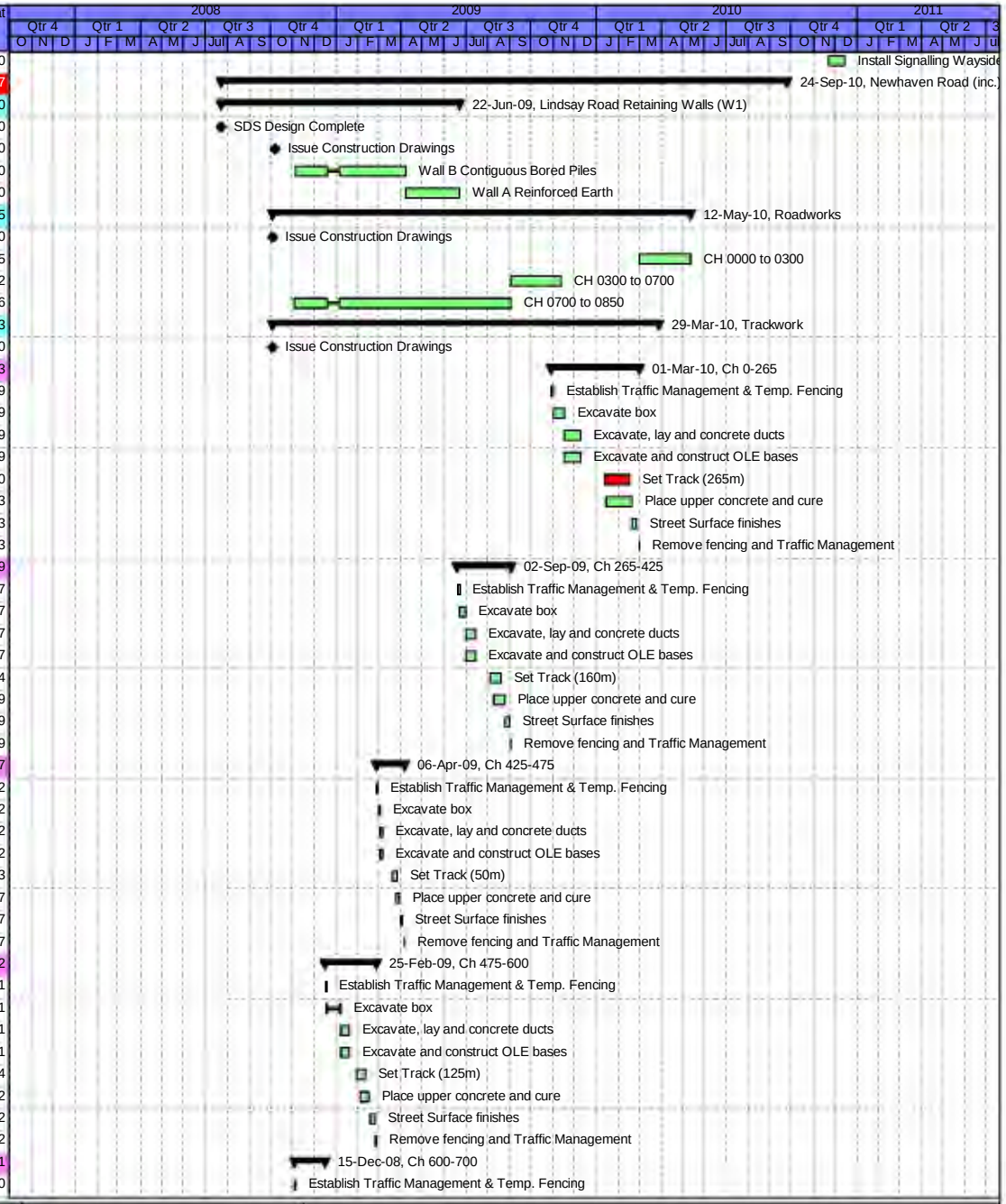

Date	Revision	Checked	Approved
29-Apr-08	Contract Programme 29 April 2008	SCS	

Activity ID	Activity Name	Original Duration	Start	Finish	Total Float
A15660	Excavate box	4	05-Nov-08	10-Nov-08	0
A15670	Excavate, lay and concrete ducts	6	11-Nov-08	18-Nov-08	0
A15680	Excavate and construct OLE bases	6	11-Nov-08	18-Nov-08	0
A15690	Set Track (100m)	8	19-Nov-08	28-Nov-08	0
A15700	Place upper concrete and cure	8	24-Nov-08	04-Dec-08	11
A15710	Street Surface finishes	6	05-Dec-08	12-Dec-08	11
A15720	Remove fencing and Traffic Management	1	15-Dec-08	15-Dec-08	11
Ch 700-850		52	15-Jan-10	29-Mar-10	53
A15570	Establish Traffic Management & Temp. Fencing	2	15-Jan-10	19-Jan-10	71
A15580	Excavate box	6	19-Jan-10	27-Jan-10	71
A15590	Excavate, lay and concrete ducts	9	27-Jan-10	09-Feb-10	71
A15600	Excavate and construct OLE bases	9	27-Jan-10	09-Feb-10	71
A15610	Set Track (150m)	10	02-Mar-10	15-Mar-10	4
A15620	Place upper concrete and cure	10	05-Mar-10	18-Mar-10	53
A15630	Street Surface finishes	6	19-Mar-10	26-Mar-10	53
A15640	Remove fencing and Traffic Management	1	29-Mar-10	29-Mar-10	53
Newhaven Road Tramstop		512	14-Aug-08	14-Sep-10	205
11990	Issue Construction Drawings	0		14-Aug-08*	0
8	Civil and Building Works	65	02-Mar-10	03-Jun-10	110
98	Order REC Supply	0	29-Apr-10		300
A1680	Deliver and Install Shelter	10	14-Jun-10	28-Jun-10	79
A4288	Access for visual inspection for E&M Tram Stop inst	0	26-May-:		281
A4289	Access for E&M Tram Stop installation (01A Newha	0	28-Jun-10		79
A4290	Install LV Power Supply and LV Power Equipment	25	28-Jun-10	03-Aug-10	79
A4300	Install Telecon Equipment	20	03-Aug-10	31-Aug-10	89
A4310	Install Station Control Equipment + AFC Equipment	25	03-Aug-10	07-Sep-10	79
A4315	Package Test Tramstop	5	07-Sep-10	14-Sep-10	79
Leith Sands Sub Station		159	09-Feb-10	24-Sep-10	197
36	Order REC supply from Scottish Power	0	09-Feb-10		135
6	Civil Engineering and Building Works	65	02-Mar-10	03-Jun-10	135
A5480	Power Infeed from Public Net available inc HV cable	0	04-Jun-10		135
A5483	Access for visual inspection for E&M Substation insta	0	04-May-:		297
A5484	Access for E&M Substation installation (01A Leith Sa	0	04-Jun-10		135
A5490	Install LV Power Supply and LV Power Equipment	15	09-Jul-10	30-Jul-10	110
A5500	Installation of TPS Equipment	30	23-Jul-10	06-Sep-10	71
A5510	Install Telecom and Scada	15	16-Aug-10	06-Sep-10	71
A5520	Testing and Commissioning	14	06-Sep-10	24-Sep-10	71
Ocean Terminal (inc.) to Port of Leith (exc.)		677	28-Mar-08	20-Dec-10	136
Roadworks		453	03-Oct-08	11-Aug-10	64
12010	Issue Construction Drawings	0		03-Oct-08*	0
Ocean Terminal Ch 850-1080		47	27-Jul-09	30-Sep-09	169
A15510	Excavate for new channel and kerb line / remove ex	12	27-Jul-09	12-Aug-09	169
A15520	Construct Kerb lines	14	30-Jul-09	19-Aug-09	169
A15530	Reset Gullies	28	14-Aug-09	22-Sep-09	169
A15540	Surface new channel	6	23-Sep-09	30-Sep-09	169
A15550	Pavement Works	28	20-Aug-09	28-Sep-09	171
A15560	Street Lighting / Traffic Signals / Road Signs	7	20-Aug-09	28-Aug-09	192
Ocean Terminal to Rennies Isle Ch 1080-1410		53	27-May-:	11-Aug-10	64
A15450	Excavate for new channel and kerb line / remove ex	14	27-May-:	16-Jun-10	64
A15460	Construct Kerb lines	17	02-Jun-10	24-Jun-10	64
A15470	Reset Gullies	34	16-Jun-10	03-Aug-10	64
A15480	Surface new channel	6	04-Aug-10	11-Aug-10	64

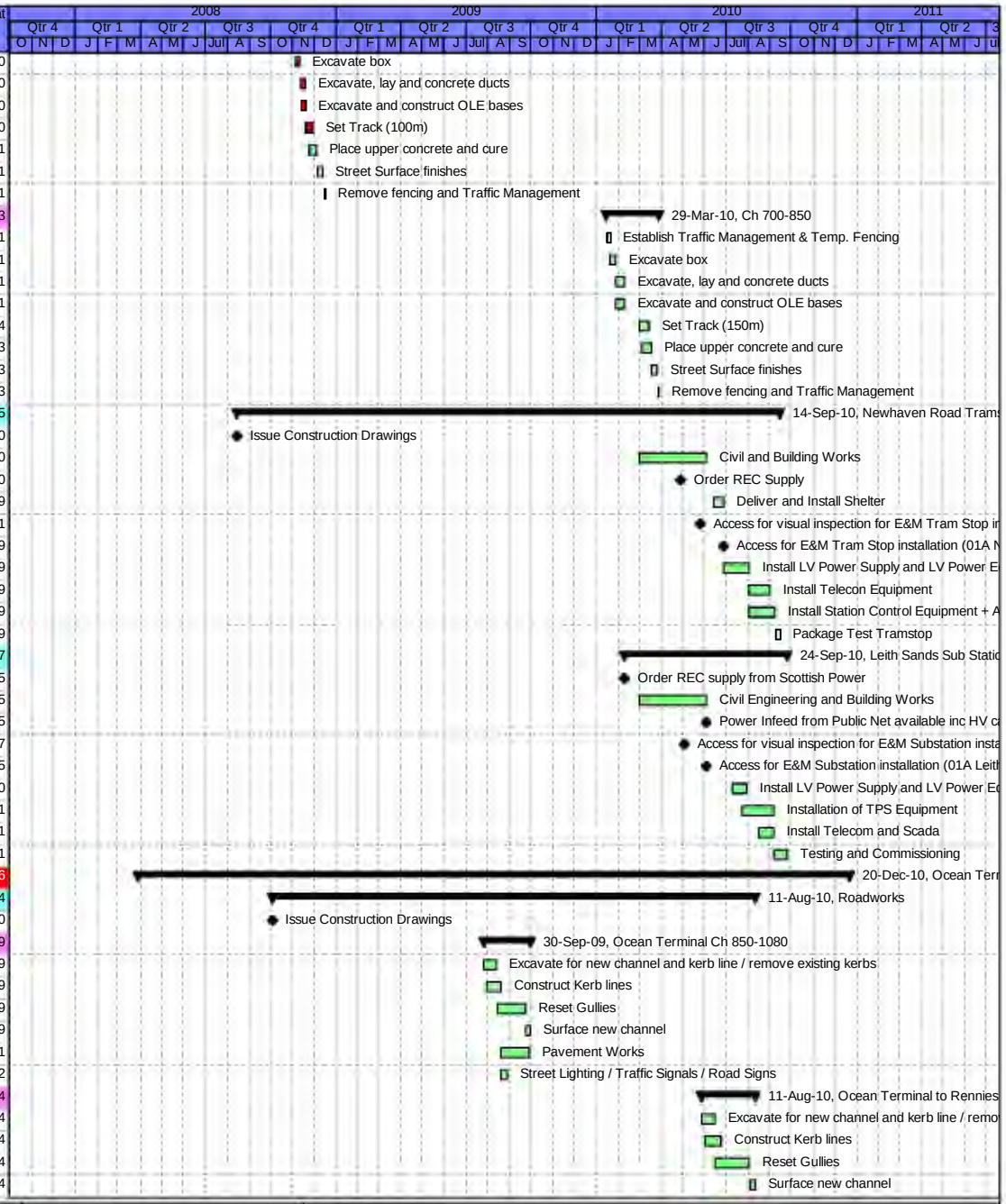

Date	Revision	Checked	Approved
29-Apr-08	Contract Programme 29 April 2008	SCS	

Activity ID	Activity Name	Original Duration	Start	Finish	Total Float
A15490	Pavement Works	33	25-Jun-10	11-Aug-10	64
A15500	Street Lighting / Traffic Signals / Road Signs	7	25-Jun-10	05-Jul-10	90
Rennies Isle to Casino Square Ch 1410-1880		74	09-Dec-09	06-Apr-10	96
A15390	Excavate for new channel and kerb line / remove e	19	09-Dec-09	18-Jan-10	96
A15400	Construct Kerb lines	24	14-Dec-09	28-Jan-10	96
A15410	Reset Gullies	48	11-Jan-10	17-Mar-10	103
A15420	Surface new channel	6	18-Mar-10	25-Mar-10	103
A15430	Pavement Works	47	29-Jan-10	06-Apr-10	96
A15440	Street Lighting / Traffic Signals / Road Signs	7	29-Jan-10	08-Feb-10	136
Trackwork		466	03-Oct-08	30-Aug-10	52
12020	Issue Construction Drawings	0		03-Oct-08*	0
Ocean Terminal Ch 850-1080		75	23-Jul-09	05-Nov-09	144
A15310	Establish Traffic Management & Temp. Fencing	2	23-Jul-09	24-Jul-09	21
A15320	Excavate box	12	27-Jul-09	12-Aug-09	21
A15330	Excavate, lay and concrete ducts	17	13-Aug-09	04-Sep-09	21
A15340	Excavate and construct OLE bases	17	13-Aug-09	04-Sep-09	21
A15350	Set Track (280m)	28	15-Sep-09	22-Oct-09	0
A15360	Place upper concrete and cure	28	18-Sep-09	27-Oct-09	144
A15370	Street Surface finishes	6	28-Oct-09	04-Nov-09	144
A15380	Remove fencing and Traffic Management	1	05-Nov-09	05-Nov-09	144
Ocean Terminal to Rennies Isle Ch 1080-1410		68	25-May-:	30-Aug-10	52
A15230	Establish Traffic Management & Temp. Fencing	2	25-May-:	26-May-10	64
A15240	Excavate box	14	27-May-:	16-Jun-10	71
A15250	Excavate, lay and concrete ducts	20	17-Jun-10	14-Jul-10	71
A15260	Excavate and construct OLE bases	20	17-Jun-10	14-Jul-10	71
A15270	Set Track (330m)	21	16-Jul-10	16-Aug-10	52
A15280	Place upper concrete and cure	21	21-Jul-10	19-Aug-10	52
A15290	Street Surface finishes	6	20-Aug-10	27-Aug-10	52
A15300	Remove fencing and Traffic Management	1	30-Aug-10	30-Aug-10	52
Rennies Isle to Casino Square Ch 1410-1880		109	07-Dec-09	24-May-10	64
A15150	Establish Traffic Management & Temp. Fencing	2	07-Dec-09	08-Dec-09	47
A15160	Excavate box	19	09-Dec-09	18-Jan-10	47
A15170	Excavate, lay and concrete ducts	28	19-Jan-10	25-Feb-10	47
A15180	Excavate and construct OLE bases	28	19-Jan-10	25-Feb-10	47
A15190	Set Track (470m)	29	29-Mar-10	10-May-10	0
A15200	Place upper concrete and cure	29	01-Apr-10	13-May-10	64
A15210	Street Surface finishes	6	14-May-:	21-May-10	64
A15220	Remove fencing and Traffic Management	1	24-May-:	24-May-10	64
Victoria Dock Entrance Bridge (S16)		463	19-Aug-08	08-Jul-10	74
12029	SDS Design Complete	0		19-Aug-08*	0
12030	Issue Construction Drawings	0		29-Oct-08*	0
12330	Permanent Diversion of Services (by Others)	40	04-Sep-08	29-Oct-08	456
131	Reprofile and Waterproof Deck (Dummy)	30	27-May-:	08-Jul-10	74
Tower Place Bridge (S17)		376	24-Sep-08	12-Apr-10	186
12039	SDS Design Complete	0		24-Sep-08*	0
12040	Issue Construction Drawings	0		03-Dec-08*	0
A16050	Temporary Diversion of Services (by others)	40	08-Oct-08	03-Dec-08	67
A16060	Temporary Platforms and Demolition	60	15-Jan-09	08-Apr-09	47
A1770	Piling	15	09-Apr-09	30-Apr-09	47
North Widening		76	01-May-(	19-Aug-09	47
A101	Substructure	40	01-May-(	29-Jun-09	47
A11	Install Beams	1	30-Jun-09	30-Jun-09	47

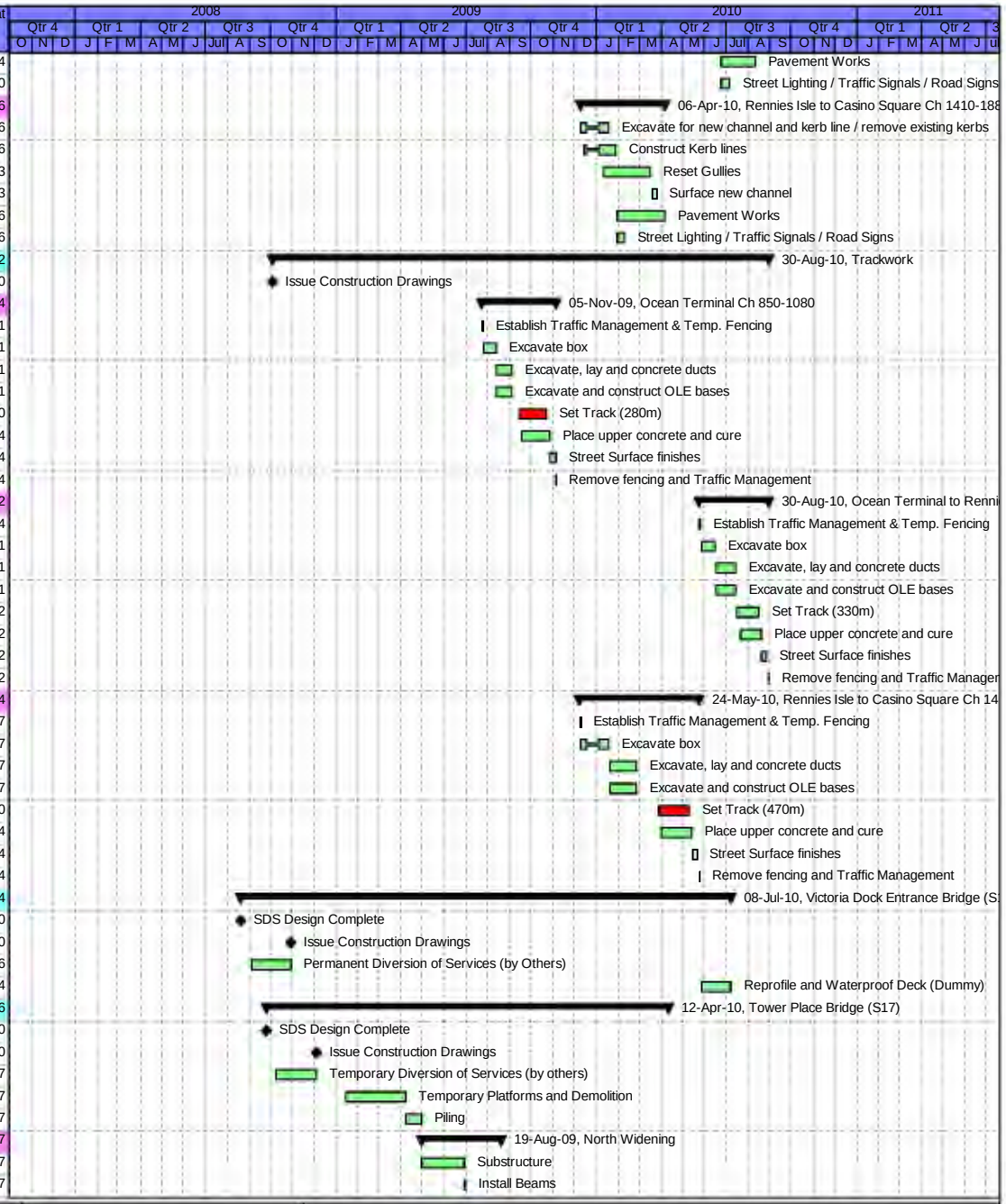

Date	Revision	Checked	Approved
29-Apr-08	Contract Programme 29 April 2008	SCS	

USB00000080_0007

Activity ID	Activity Name	Original Duration	Start	Finish	Total Float
A16070	Superstructure	35	01-Jul-09	19-Aug-09	47
South Widening		76	20-Aug-09	04-Dec-09	47
A16080	Substructure	40	20-Aug-09	14-Oct-09	47
A1760	Install Beams	1	15-Oct-09	15-Oct-09	47
A31	Superstructure	35	16-Oct-09	04-Dec-09	47
Deck Finishes		80	07-Dec-09	12-Apr-10	186
A16090	Permanent Diversion of Services (by others)	40	07-Dec-09	12-Feb-10	186
A16100	Finishes	40	15-Feb-10	12-Apr-10	186
Ocean Terminal Tram Stop		677	28-Mar-08	20-Dec-10	136
12049	SDS Design Complete	0		28-Mar-08*	0
12050	Issue Construction Drawings	0		14-May-08*	0
14	Civil Engineering and Building Works	65	27-Jul-09	26-Oct-09	151
178	Order REC Supply	0	11-Aug-09		475
A1720	Deliver and Install Shelter	10	22-Sep-09	05-Oct-09	254
A4318	Access for visual insepction for E&M Tram Stop inst	0	04-Sep-09		456
A4319	Access for E&M Tram Stop installation (01A Ocean	0	06-Oct-09		254
A4320	Install LV Power Supply and LV Power Equipment	25	06-Oct-09	09-Nov-09	254
A4330	Install Telecon Equipment	20	10-Nov-09	08-Dec-09	264
A4340	Install Station Control Equipment + AFC Equipment	25	10-Nov-09	15-Dec-09	254
A4350	Package Test Tramstop	5	16-Dec-09	05-Jan-10	254
A6090	Installation of SIG-interlocking cubicle (2)	15	20-Oct-09	09-Nov-09	279
A6100	Commissioning of SIG -interlocking cubicle	5	14-Dec-10	20-Dec-10	10
Port of Leith (inc.) to Bernard Street (exc.)		538	25-Apr-08	05-Jul-10	255
Trackworks		227	03-Oct-08	08-Sep-09	291
12060	Issue Construction Drawings	0		03-Oct-08*	0
Casino Square to Baltic Street Ch 1850-1880		33	23-Jul-09	08-Sep-09	291
A16110	Establish Traffic Management & Temp. Fencing	2	23-Jul-09	24-Jul-09	17
A16120	Excavate box	2	27-Jul-09	28-Jul-09	17
A16130	Excavate, lay and concrete ducts	3	29-Jul-09	31-Jul-09	17
A16140	Excavate and construct OLE bases	3	29-Jul-09	31-Jul-09	17
A16150	Set Track (30m)	4	20-Aug-09	25-Aug-09	4
A16160	Place upper concrete and cure	4	25-Aug-09	28-Aug-09	291
A16170	Street Surface finishes	6	31-Aug-09	07-Sep-09	291
A16180	Remove fencing and Traffic Management	1	08-Sep-09	08-Sep-09	291
Casino Square to Baltic Street Ch 1880 - 2110		57	01-May-(	22-Jul-09	17
A15010	Establish Traffic Management & Temp. Fencing	2	01-May-(	06-May-09	26
A15020	Excavate box	10	06-May-(	20-May-09	26
A15030	Excavate, lay and concrete ducts	14	20-May-(	10-Jun-09	26
A15040	Excavate and construct OLE bases	14	20-May-(	10-Jun-09	26
A15050	Set Track (230m)	15	18-Jun-09	08-Jul-09	0
A15060	Place upper concrete and cure	15	23-Jun-09	13-Jul-09	17
A15070	Street Surface finishes	6	14-Jul-09	21-Jul-09	17
A15080	Remove fencing and Traffic Management	1	22-Jul-09	22-Jul-09	17
Roadworks		180	03-Oct-08	03-Jul-09	30
12070	Issue Construction Drawings	0		03-Oct-08*	0
Casino Square to Baltic Street Ch 1880 - 2110		41	06-May-(	03-Jul-09	30
A15090	Excavate for new channel and kerb line / remove e)	10	06-May-(	20-May-09	30
A15100	Construct Kerb lines	12	11-May-(	28-May-09	30
A15110	Reset Gullies	24	26-May-(	29-Jun-09	30
A15120	Surface new channel	4	29-Jun-09	03-Jul-09	30
A15130	Pavement Works	23	28-May-(	30-Jun-09	33
A15140	Street Lighting / Traffic Signals / Road Signs	7	28-May-(	08-Jun-09	49

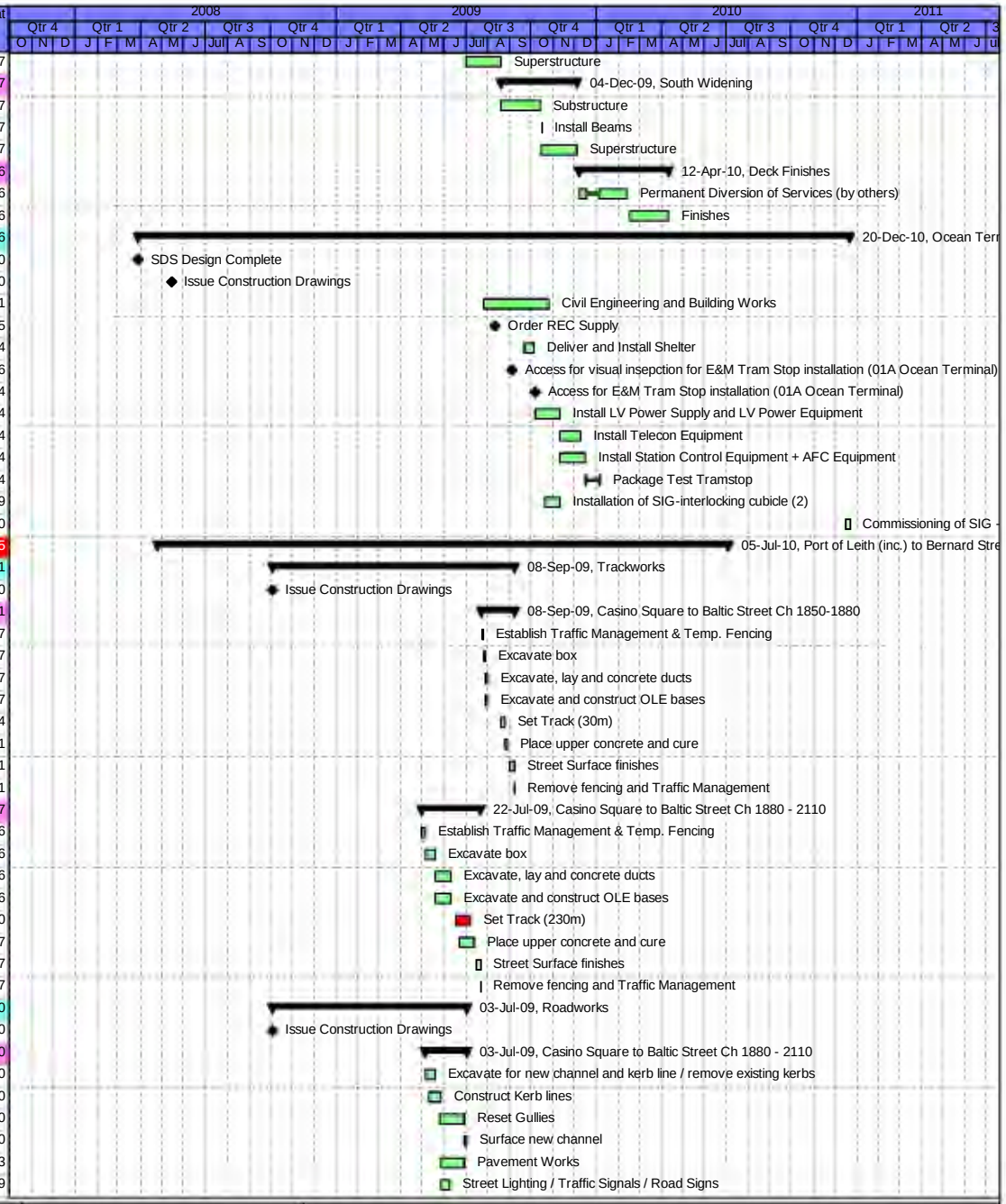

Date	Revision	Checked	Approved
29-Apr-08	Contract Programme 29 April 2008	SCS	

Activity ID	Activity Name	Original Duration	Start	Finish	Total Float
Port of Leith Tram Stop		538	25-Apr-08	05-Jul-10	255
12080	Issue Construction Drawings	0		25-Apr-08*	0
17	Civil Engineering and Building Works	65	09-Dec-09	23-Mar-10	105
188	Order REC Supply	0	17-Feb-10		350
A1800	Deliver and Install Shelter	10	31-Mar-10	15-Apr-10	129
A4358	Access for visual inspection for E&M Tram Stop inst	0	16-Mar-10		348
A4359	Access for E&M Tram Stop installation (01A Ocean	0	15-Apr-10		132
A4360	Install LV Power Supply and LV Power Equipment	25	15-Apr-10	21-May-10	129
A4370	Install Telecon Equipment	20	21-May-:	21-Jun-10	139
A4380	Install Station Control Equipment + AFC Equipment	25	21-May-:	28-Jun-10	129
A4390	Package Test Tramstop	5	28-Jun-10	05-Jul-10	129
Bernard Street (inc.) to Foot of the Walk (exc.)		661	25-Apr-08	24-Dec-10	132
Bernard Street Tram Stop		661	25-Apr-08	24-Dec-10	132
12090	Issue Construction Drawings	0		25-Apr-08*	0
198	Order REC Supply	0	13-Aug-10		227
20	Civil Engineering And Building Works	65	15-Jun-10	14-Sep-10	6
A1850	Deliver and Install Shelter	10	24-Sep-10	07-Oct-10	6
A4398	Access for visual insepction for E&M Tram Stop inst	0	08-Sep-10		223
A4399	Access for E&M Tram Stop installation (01A Constit	0	08-Oct-10		201
A4400	Install LV Power Supply and LV Power Equipment	25	08-Oct-10	11-Nov-10	6
A4410	Install Telecon Equipment	20	12-Nov-10	10-Dec-10	16
A4420	Install Station Control Equipment + AFC Equipment	25	12-Nov-10	17-Dec-10	6
A4430	Package Test Tramstop	5	20-Dec-10	24-Dec-10	6
Trackworks		478	03-Oct-08	15-Sep-10	40
12100	Issue Construction Drawings	0		03-Oct-08*	0
Baltic to Queen Charlotte Ch 2110-2340		68	11-Jun-10	15-Sep-10	40
A14870	Establish Traffic Management & Temp. Fencing	2	11-Jun-10	14-Jun-10	6
A14880	Excavate box	10	15-Jun-10	28-Jun-10	33
A14890	Excavate, lay and concrete ducts	14	29-Jun-10	16-Jul-10	33
A14900	Excavate and construct OLE bases	14	29-Jun-10	16-Jul-10	33
A14910	Set Track (230m)	15	01-Jul-10	21-Jul-10	33
A14920	Place upper concrete and cure	15	06-Jul-10	26-Jul-10	69
A14930	Street Surface finishes	6	27-Jul-10	04-Aug-10	69
A14940	Remove fencing and Traffic Management	1	15-Sep-10	15-Sep-10	40
Queen Charlotte to Foot/Walk Ch 2340-2730		87	05-Feb-10	10-Jun-10	6
A14630	Establish Traffic Management & Temp. Fencing	2	05-Feb-10	09-Feb-10	19
A14640	Excavate box	16	09-Feb-10	03-Mar-10	19
A14650	Excavate, lay and concrete ducts	24	03-Mar-10	07-Apr-10	19
A14660	Excavate and construct OLE bases	24	03-Mar-10	07-Apr-10	19
A14680	Set Track (390m)	25	21-Apr-10	26-May-10	6
A14690	Place upper concrete and cure	25	26-Apr-10	01-Jun-10	6
A14700	Street Surface finishes	6	02-Jun-10	09-Jun-10	6
A14710	Remove fencing and Traffic Management	1	10-Jun-10	10-Jun-10	6
Roadworks		453	03-Oct-08	11-Aug-10	64
12110	Issue Construction Drawings	0		03-Oct-08*	0
Baltic to Queen Charlotte Ch 2110-2340		41	15-Jun-10	11-Aug-10	64
A14950	Excavate for new channel and kerb line / remove e	10	15-Jun-10	28-Jun-10	64
A14960	Construct Kerb lines	12	18-Jun-10	05-Jul-10	64
A14970	Reset Gullies	24	02-Jul-10	05-Aug-10	64
A14980	Surface new channel	4	06-Aug-10	11-Aug-10	64
A14990	Pavement Works	23	06-Jul-10	06-Aug-10	67
A15000	Street Lighting / Traffic Signals / Road Signs	7	06-Jul-10	14-Jul-10	83

Date	Revision	Checked	Approved
29-Apr-08	Contract Programme 29 April 2008	SCS	

Activity ID	Activity Name	Original Duration	Start	Finish	Total Float
Queen Charlotte to Foot /Walk Ch 2340-2730		62	09-Feb-10	10-May-10	28
A14810	Excavate for new channel and kerb line / remove e	16	09-Feb-10	03-Mar-10	28
A14820	Construct Kerb lines	20	12-Feb-10	12-Mar-10	28
A14830	Reset Gullies	40	26-Feb-10	26-Apr-10	31
A14840	Surface new channel	6	26-Apr-10	05-May-10	31
A14850	Pavement Works	39	12-Mar-10	10-May-10	28
A14860	Street Lighting / Traffic Signals / Road Signs	7	12-Mar-10	23-Mar-10	60
01B Foot of the Walk (inc.) to McDonald Road (exc.)		608	14-Mar-08	31-Aug-10	214
E & M Installation		65	28-May-:	31-Aug-10	214
A3763	Access for visual inspection for E&M wayside installa	0	28-May-:		279
A3764	Access for E&M wayside installation (01B)	0	30-Jun-10		258
A3765	Installation of poles and building fixings	10	30-Jun-10	13-Jul-10	0
A3770	Overhead Catenary Line	23	14-Jul-10	16-Aug-10	0
A3778	Access for visual inspection to cable pits for cable la	0	28-Jun-10		259
A3779	Access to cable pits for cable laying (01B)	0	28-Jul-10		238
A3780	Install Electrical Cables	12	28-Jul-10	13-Aug-10	88
A3790	Install Fibre Optic Cables	12	28-Jul-10	13-Aug-10	100
A3800	Install Signalling Wayside Equipment	12	16-Aug-10	31-Aug-10	88
Foot of the walk (inc.) to Balfour Street (exc.)		586	28-Mar-08	13-Aug-10	227
Foot of the Walk Tram Stop		563	25-Apr-08	10-Aug-10	230
12120	Issue Construction Drawings	0		25-Apr-08*	0
528	Order REC Supply	0	24-Mar-10		325
Construction		126	09-Feb-10	10-Aug-10	230
50	Civil Engineering And Building Works	65	09-Feb-10	13-May-10	125
A2560	Deliver and Install Shelter	10	07-May-:	21-May-10	104
A4438	Access for visual inspection for E&M Tram Stop inst	0	21-Apr-10		322
A4439	Access for E&M Tram Stop installation (01B Foot of	0	21-May-:		106
A4440	Install LV Power Supply and LV Power Equipment	25	21-May-:	28-Jun-10	104
A4450	Install Telecon Equipment	20	28-Jun-10	26-Jul-10	114
A4460	Install Station Control Equipment + AFC Equipment	25	28-Jun-10	03-Aug-10	104
A4470	Package Test Tramstop	5	03-Aug-10	10-Aug-10	104
Leith Walk Substation		144	19-Jan-10	13-Aug-10	227
146	Order REC supply from Scottish Power	0	19-Jan-10		150
176	Civil Engineering and Building Works	65	09-Feb-10	13-May-10	150
A2638	Access for visual inspection for E&M Substation inst	0	13-Apr-10		328
A2639	Access for E&M Substation installation (01B Leith W	0	13-May-:		153
A5530	Power Infeed from Public Net available inc HV cabl	0	13-May-:		150
A5540	Install LV Power Supply and LV Power Equipment	15	27-May-:	18-Jun-10	140
A5550	Installation of TPS Equipment	30	11-Jun-10	23-Jul-10	93
A5560	Install Telecom and Scada	15	02-Jul-10	23-Jul-10	101
A5570	Testing and Commissioning	14	23-Jul-10	13-Aug-10	101
Trackwork		337	15-May-(	23-Sep-09	6
12130	Issue Construction Drawings	0		15-May-08*	0
Foot of the Walk Ch 0-100		67	12-Dec-08	30-Mar-09	0
Phase 1		31	12-Dec-08	06-Feb-09	0
A12450	Establish Traffic Management & Temp. Fencing	2	12-Dec-08	15-Dec-08	11
A12460	Excavate box	2	16-Dec-08	17-Dec-08	11
A12470	Excavate, lay and concrete ducts	3	18-Dec-08	05-Jan-09	11
A12480	Excavate and construct OLE bases	3	18-Dec-08	05-Jan-09	11
A12500	Set Track (50m)	6	21-Jan-09	28-Jan-09	0
A12510	Place upper concrete and cure	6	26-Jan-09	02-Feb-09	0
A12520	Street Surface finishes	3	03-Feb-09	05-Feb-09	0

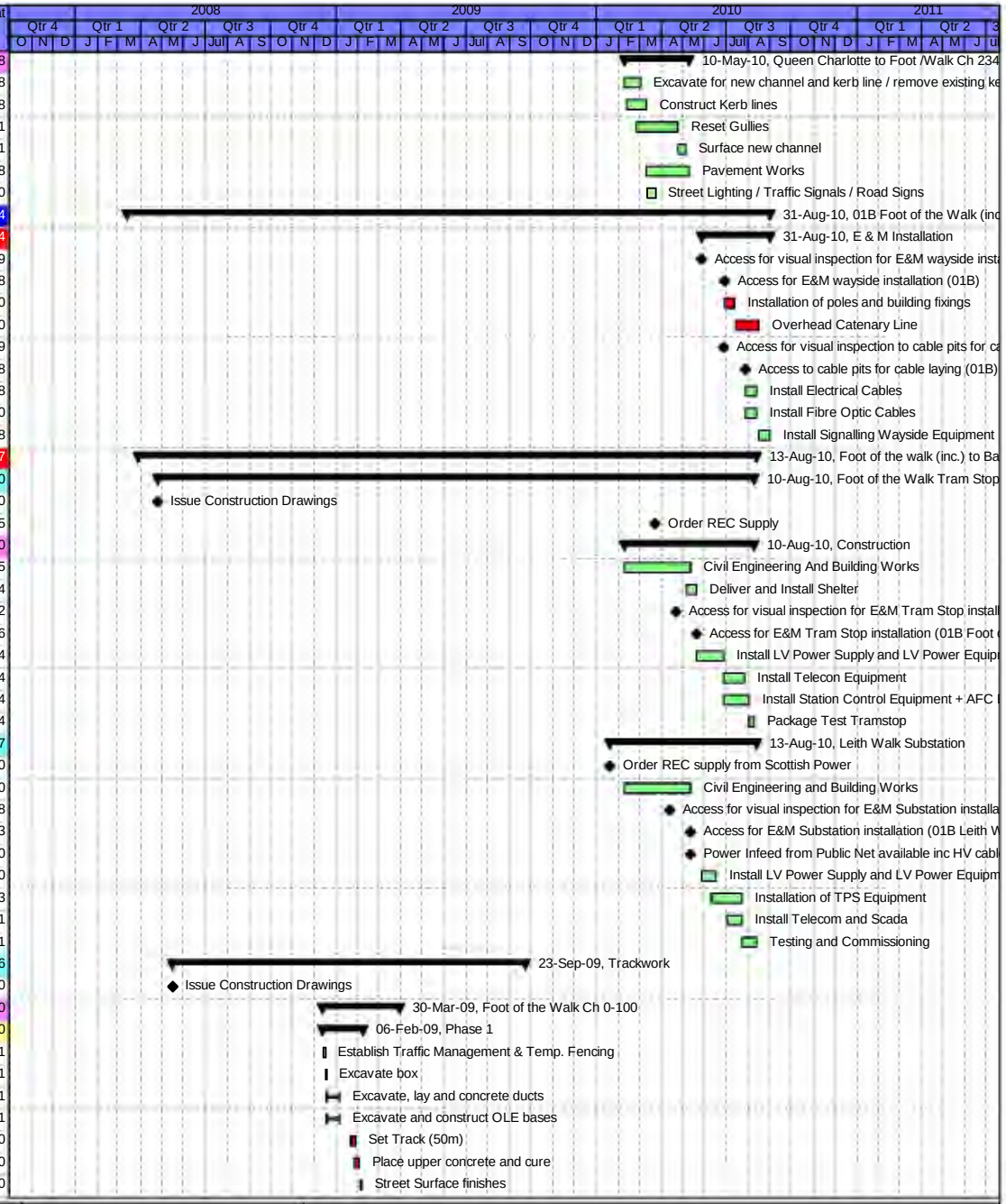

Date	Revision	Checked	Approved
29-Apr-08	Contract Programme 29 April 2008	SCS	

Activity ID	Activity Name	Original Duration	Start	Finish	Total Float
A13510	Remove fencing and Traffic Management	1	06-Feb-09	06-Feb-09	0
Phase 2		18	09-Feb-09	04-Mar-09	0
A12530	Establish Traffic Management & Temp. Fencing	2	09-Feb-09	10-Feb-09	0
A12540	Excavate box	2	11-Feb-09	12-Feb-09	0
A12550	Excavate, lay and concrete ducts	3	13-Feb-09	17-Feb-09	0
A12560	Excavate and construct OLE bases	3	13-Feb-09	17-Feb-09	0
A12580	Set Track (50m)	4	18-Feb-09	23-Feb-09	0
A12590	Place upper concrete and cure	4	23-Feb-09	26-Feb-09	0
A12600	Street Surface finishes	3	27-Feb-09	03-Mar-09	0
A13500	Remove fencing and Traffic Management	1	04-Mar-09	04-Mar-09	0
Phase 3		18	05-Mar-09	30-Mar-09	0
A12610	Establish Traffic Management & Temp. Fencing	2	05-Mar-09	06-Mar-09	0
A12620	Excavate box	2	09-Mar-09	10-Mar-09	0
A12630	Excavate, lay and concrete ducts	3	11-Mar-09	13-Mar-09	0
A12640	Excavate and construct OLE bases	3	11-Mar-09	13-Mar-09	0
A12660	Set Track (50m)	4	16-Mar-09	19-Mar-09	0
A12670	Place upper concrete and cure	4	19-Mar-09	24-Mar-09	0
A12680	Street Surface finishes	3	25-Mar-09	27-Mar-09	0
A13490	Remove fencing and Traffic Management	1	30-Mar-09	30-Mar-09	0
Leith Walk Ch 100-350		61	31-Mar-09	26-Jun-09	1
1st half		31	31-Mar-09	14-May-09	0
A12690	Establish Traffic Management & Temp. Fencing	2	31-Mar-09	01-Apr-09	0
A12700	Excavate box	5	02-Apr-09	08-Apr-09	0
A12710	Excavate, lay and concrete ducts	8	09-Apr-09	21-Apr-09	0
A12720	Excavate and construct OLE bases	8	09-Apr-09	21-Apr-09	0
A12740	Set Track (250m)	10	22-Apr-09	06-May-09	0
A12750	Place upper concrete and cure	10	27-Apr-09	11-May-09	0
A12760	Street Surface finishes	3	12-May-(	14-May-09	0
2nd half		30	15-May-(	26-Jun-09	1
A13090	Excavate box	5	15-May-(	21-May-09	0
A13100	Excavate, lay and concrete ducts	8	22-May-(	03-Jun-09	0
A13130	Set Track	10	04-Jun-09	17-Jun-09	0
A13140	Place upper concrete and cure	10	09-Jun-09	22-Jun-09	1
A13150	Street Surface finishes	3	23-Jun-09	25-Jun-09	1
A13160	Remove fencing and Traffic Management	1	26-Jun-09	26-Jun-09	1
Leith Walk Ch 350-600		62	29-Jun-09	23-Sep-09	6
1st half		32	29-Jun-09	12-Aug-09	0
A12770	Establish Traffic Management & Temp. Fencing	2	29-Jun-09	30-Jun-09	1
A12780	Excavate box	5	01-Jul-09	07-Jul-09	1
A12790	Excavate, lay and concrete ducts	8	08-Jul-09	17-Jul-09	1
A12800	Excavate and construct OLE bases	8	08-Jul-09	17-Jul-09	1
A12820	Set Track (250m)	10	21-Jul-09	04-Aug-09	0
A12830	Place upper concrete and cure	10	24-Jul-09	07-Aug-09	0
A12840	Street Surface finishes	3	10-Aug-09	12-Aug-09	0
2nd half		30	13-Aug-09	23-Sep-09	6
A13170	Excavate box	5	13-Aug-09	19-Aug-09	0
A13180	Excavate, lay and concrete ducts	8	20-Aug-09	31-Aug-09	0
A13210	Set Track	10	01-Sep-09	14-Sep-09	0
A13220	Place upper concrete and cure	10	04-Sep-09	17-Sep-09	6
A13230	Street Surface finishes	3	18-Sep-09	22-Sep-09	6
A13240	Remove fencing and Traffic Management	1	23-Sep-09	23-Sep-09	6
Roadworks		180	28-Mar-08	11-Dec-08	11

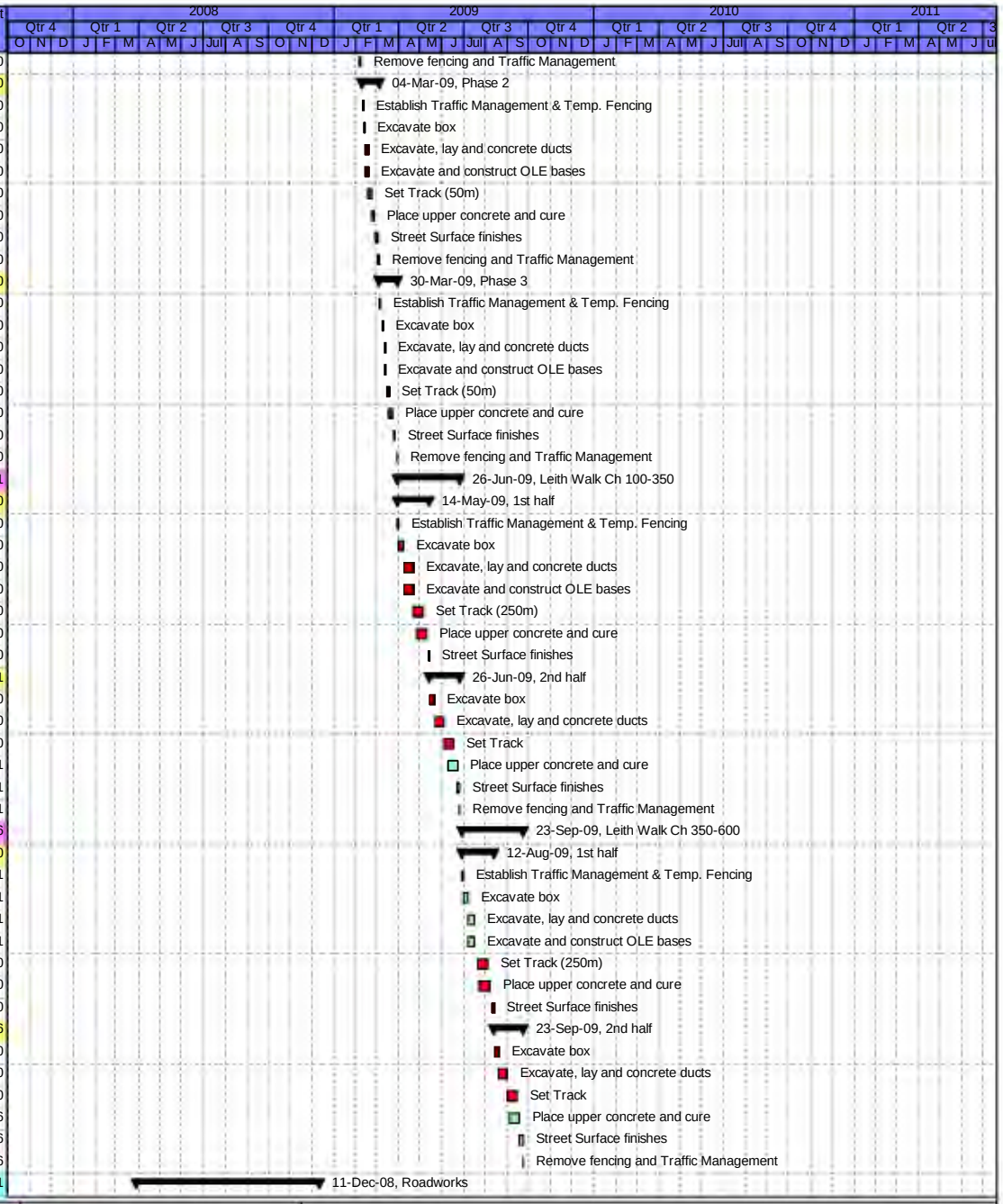

Date	Revision	Checked	Approved
29-Apr-08	Contract Programme 29 April 2008	SCS	

Activity ID	Activity Name	Original Duration	Start	Finish	Total Float
12140	Issue Construction Drawings	0		28-Mar-08*	0
Foot of the Walk Ch 0-100		31	01-Aug-08	15-Sep-08	11
A12370	Establish Traffic Management & Temp. Fencing	2	01-Aug-08	05-Aug-08	11
A12380	Excavate for new channel and kerb line / remove e	10	06-Aug-08	19-Aug-08	11
A12390	Construct Kerb lines	13	11-Aug-08	27-Aug-08	11
A12400	Reset Gullies	13	18-Aug-08	03-Sep-08	12
A12410	Surface new channel	6	04-Sep-08	11-Sep-08	12
A12420	Pavement Works	12	28-Aug-08	12-Sep-08	11
A12430	Street Lighting / Traffic Signals / Road Signs	7	28-Aug-08	05-Sep-08	16
A12440	Remove fencing and Traffic Management	1	15-Sep-08	15-Sep-08	11
Leith Walk Ch 350-100		31	16-Sep-08	28-Oct-08	11
A11970	Establish Traffic Management & Temp. Fencing	2	16-Sep-08	17-Sep-08	11
A11980	Excavate for new channel and kerb line / remove e	10	18-Sep-08	01-Oct-08	11
A11990	Construct Kerb lines	13	23-Sep-08	09-Oct-08	11
A12000	Reset Gullies	13	30-Sep-08	16-Oct-08	12
A12010	Surface new channel	6	17-Oct-08	24-Oct-08	12
A12020	Pavement Works	12	10-Oct-08	27-Oct-08	11
A12030	Street Lighting / Traffic Signals / Road Signs	7	10-Oct-08	20-Oct-08	16
A12040	Remove fencing and Traffic Management	1	28-Oct-08	28-Oct-08	11
Leith Walk Ch 350-600		31	29-Oct-08	11-Dec-08	11
A12050	Establish Traffic Management & Temp. Fencing	2	29-Oct-08	30-Oct-08	11
A12060	Excavate for new channel and kerb line / remove e	10	31-Oct-08	13-Nov-08	11
A12070	Construct Kerb lines	13	05-Nov-08	21-Nov-08	11
A12080	Reset Gullies	13	12-Nov-08	28-Nov-08	12
A12090	Surface new channel	6	02-Dec-08	09-Dec-08	12
A12100	Pavement Works	12	24-Nov-08	10-Dec-08	11
A12110	Street Lighting / Traffic Signals / Road Signs	7	24-Nov-08	03-Dec-08	16
A12120	Remove fencing and Traffic Management	1	11-Dec-08	11-Dec-08	11
Balfour Street (inc.) to McDonald Road (exc.)		595	14-Mar-08	12-Aug-10	227
Trackwork		553	15-May-(	12-Aug-10	4
12150	Issue Construction Drawings	0		15-May-08*	0
Balfour Street Ch 600-850		109	24-Sep-09	10-Mar-10	0
1st half		37	24-Sep-09	13-Nov-09	45
A12850	Establish Traffic Management & Temp. Fencing	2	24-Sep-09	25-Sep-09	6
A12860	Excavate box	5	28-Sep-09	02-Oct-09	6
A12870	Excavate, lay and concrete ducts	8	05-Oct-09	14-Oct-09	6
A12880	Excavate and construct OLE bases	8	05-Oct-09	14-Oct-09	6
A12900	Set Track (250m)	10	23-Oct-09	05-Nov-09	0
A12910	Place upper concrete and cure	10	28-Oct-09	10-Nov-09	45
A12920	Street Surface finishes	3	11-Nov-09	13-Nov-09	45
2nd half		72	16-Nov-09	10-Mar-10	0
A13250	Excavate box	2	16-Nov-09	17-Nov-09	45
A13260	Excavate, lay and concrete ducts	8	18-Nov-09	27-Nov-09	45
A13290	Set Track	10	16-Feb-10	01-Mar-10	0
A13300	Place upper concrete and cure	10	19-Feb-10	04-Mar-10	0
A13310	Street Surface finishes	3	05-Mar-10	09-Mar-10	0
A13320	Remove fencing and Traffic Management	1	10-Mar-10	10-Mar-10	0
Pilrig / Iona Street Ch 850 to 950		35	11-Mar-10	29-Apr-10	5
1st half		18	11-Mar-10	06-Apr-10	5
A12930	Establish Traffic Management & Temp. Fencing	2	11-Mar-10	12-Mar-10	0
A12940	Excavate box	2	15-Mar-10	16-Mar-10	0
A12950	Excavate, lay and concrete ducts	3	17-Mar-10	19-Mar-10	0

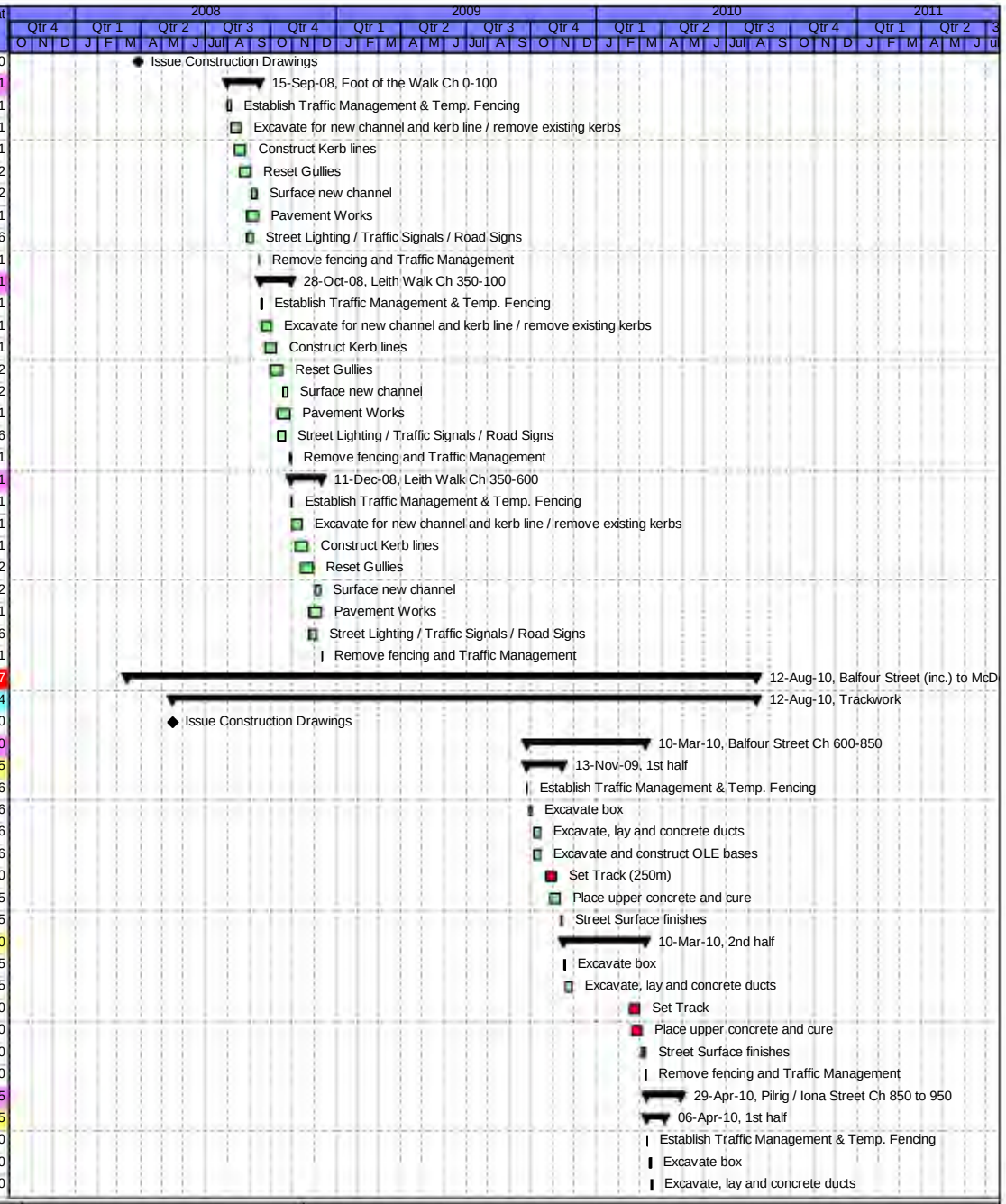

Date	Revision	Checked	Approved
29-Apr-08	Contract Programme 29 April 2008	SCS	

Activity ID	Activity Name	Original Duration	Start	Finish	Total Float
A12960	Excavate and construct OLE bases	3	17-Mar-10	19-Mar-10	0
A12980	Set Track (100m)	5	22-Mar-10	26-Mar-10	0
A12990	Place upper concrete and cure	5	25-Mar-10	31-Mar-10	5
A13000	Street Surface finishes	3	01-Apr-10	06-Apr-10	5
2nd half		17	07-Apr-10	29-Apr-10	5
A13330	Excavate box	2	07-Apr-10	08-Apr-10	5
A13340	Excavate, lay and concrete ducts	3	09-Apr-10	13-Apr-10	5
A13370	Set Track	5	14-Apr-10	20-Apr-10	5
A13380	Place upper concrete and cure	5	19-Apr-10	23-Apr-10	5
A13390	Street Surface finishes	3	26-Apr-10	28-Apr-10	5
A13400	Remove fencing and Traffic Management	1	29-Apr-10	29-Apr-10	5
McDonald / Brunswick Road Ch 950-1250		72	30-Apr-10	12-Aug-10	4
1st half		38	30-Apr-10	24-Jun-10	4
A13010	Establish Traffic Management & Temp. Fencing	2	30-Apr-10	04-May-10	5
A13020	Excavate box	6	05-May-:	12-May-10	5
A13030	Excavate, lay and concrete ducts	9	13-May-:	25-May-10	5
A13040	Excavate and construct OLE bases	9	13-May-:	25-May-10	5
A13060	Set Track (300m)	12	01-Jun-10	16-Jun-10	2
A13070	Place upper concrete and cure	12	04-Jun-10	21-Jun-10	4
A13080	Street Surface finishes	3	22-Jun-10	24-Jun-10	4
2nd half		34	25-Jun-10	12-Aug-10	4
A13410	Excavate box	6	25-Jun-10	02-Jul-10	4
A13420	Excavate, lay and concrete ducts	9	05-Jul-10	15-Jul-10	4
A13450	Set Track	12	16-Jul-10	03-Aug-10	4
A13460	Place upper concrete and cure	12	21-Jul-10	06-Aug-10	4
A13470	Street Surface finishes	3	09-Aug-10	11-Aug-10	4
A13480	Remove fencing and Traffic Management	1	12-Aug-10	12-Aug-10	4
Leith Walk Railway Bridge (S18)		0	23-Sep-09	23-Sep-09	443
26	Existing Structure	0		23-Sep-09	443
Roadworks		245	15-May-(	14-May-09	98
12160	Issue Construction Drawings	0		15-May-08*	0
Balfour Street Ch 600-850		31	12-Dec-08	06-Feb-09	98
A12130	Establish Traffic Management & Temp. Fencing	2	12-Dec-08	15-Dec-08	98
A12140	Excavate for new channel and kerb line / remove e	10	16-Dec-08	12-Jan-09	98
A12150	Construct Kerb lines	13	19-Dec-08	20-Jan-09	98
A12160	Reset Gullies	13	09-Jan-09	27-Jan-09	99
A12170	Surface new channel	6	28-Jan-09	04-Feb-09	99
A12180	Pavement Works	12	21-Jan-09	05-Feb-09	98
A12190	Street Lighting / Traffic Signals / Road Signs	7	21-Jan-09	29-Jan-09	103
A12200	Remove fencing and Traffic Management	1	06-Feb-09	06-Feb-09	98
Pilrig / Iona Street Ch 850-950		31	09-Feb-09	23-Mar-09	98
A12210	Establish Traffic Management & Temp. Fencing	2	09-Feb-09	10-Feb-09	98
A12220	Excavate for new channel and kerb line / remove e	10	11-Feb-09	24-Feb-09	98
A12230	Construct Kerb lines	13	16-Feb-09	04-Mar-09	98
A12240	Reset Gullies	13	23-Feb-09	11-Mar-09	99
A12250	Surface new channel	6	12-Mar-09	19-Mar-09	99
A12260	Pavement Works	12	05-Mar-09	20-Mar-09	98
A12270	Street Lighting / Traffic Signals / Road Signs	7	05-Mar-09	13-Mar-09	103
A12280	Remove fencing and Traffic Management	1	23-Mar-09	23-Mar-09	98
McDonald / Brunswick Road Ch 950-1250		36	24-Mar-09	14-May-09	98
A12290	Establish Traffic Management & Temp. Fencing	2	24-Mar-09	25-Mar-09	98
A12300	Excavate for new channel and kerb line / remove e	12	26-Mar-09	13-Apr-09	98

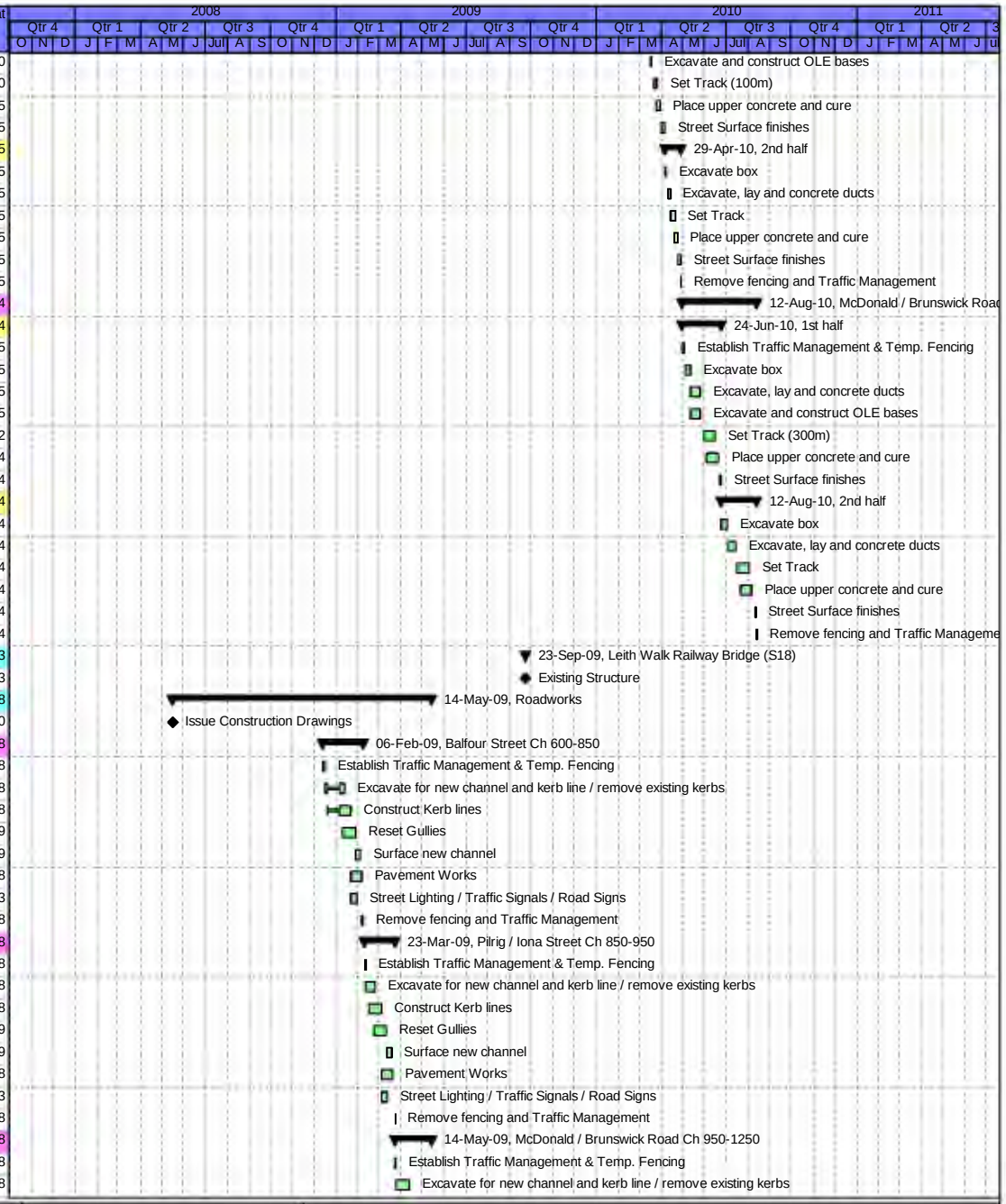

Date	Revision	Checked	Approved
29-Apr-08	Contract Programme 29 April 2008	SCS	

Activity ID	Activity Name	Original Duration	Start	Finish	Total Float
A12310	Construct Kerb lines	15	31-Mar-09	21-Apr-09	98
A12320	Reset Gullies	15	07-Apr-09	28-Apr-09	99
A12330	Surface new channel	9	29-Apr-09	12-May-09	99
A12340	Pavement Works	15	22-Apr-09	13-May-09	98
A12350	Street Lighting / Traffic Signals / Road Signs	7	22-Apr-09	30-Apr-09	106
A12360	Remove fencing and Traffic Management	1	14-May-(	14-May-09	98
Balfour Street Tram Stop		542	14-Mar-08	28-May-10	280
12170	Issue Construction Drawings	0		14-Mar-08*	0
538	Order REC Supply	0	13-Jan-10		375
Construction		161	28-Sep-09	28-May-10	280
590	Civil Engineering And Building Works	65	28-Sep-09	11-Jan-10	210
A2600	Deliver and Install Shelter	10	24-Feb-10	10-Mar-10	154
A4478	Access for visual inspection for E&M Tram Stop inst	0	08-Feb-10		374
A4479	Access for E&M Tram Stop installation (01B Balfour	0	10-Mar-10		158
A4480	Install LV Power Supply and LV Power Equipment	25	10-Mar-10	15-Apr-10	154
A4490	Install Telecon Equipment	20	15-Apr-10	14-May-10	164
A4500	Install Station Control Equipment + AFC Equipment	25	15-Apr-10	21-May-10	154
A4510	Package Test Tramstop	5	21-May-:	28-May-10	154
01C McDonald Road (inc.) to Princess Street West (exc.)		735	14-Mar-08	11-Mar-11	87
E & M Installations		112	16-Jun-10	22-Nov-10	155
A3843	Access for visual inspection for E&M wayside installa	0	16-Jun-10		224
A3844	Access for E&M wayside installation (01C)	0	16-Jul-10		203
A3845	Installation of poles and building fixings	15	16-Jul-10	09-Sep-10	0
A3850	Overhead Catenary Line	36	10-Sep-10	29-Oct-10	0
A3858	Access for visual inspection to cable pits for cable la	0	21-Jul-10		199
A3859	Access to cable pits for cable laying (01C)	0	24-Sep-10		178
A3860	Install Electrical Cables	20	24-Sep-10	21-Oct-10	7
A3870	Install Fibre Optic Cables	20	24-Sep-10	21-Oct-10	32
A3880	Install Signalling Wayside Equipment	20	22-Oct-10	22-Nov-10	7
McDonald Road (inc.) to Picardy Place (exc.)		583	14-Mar-08	26-Jul-10	239
McDonald Road Tram Stop		477	14-Mar-08	23-Feb-10	345
12180	Issue Construction Drawings	0		14-Mar-08*	0
548	Order REC Supply	0	09-Sep-09		454
600	Civil Engineering And Building Works	65	22-Jul-09	24-Nov-09	176
A2660	Deliver and Install Shelter	10	21-Oct-09	03-Nov-09	176
A2668	Access for visual inspection for E&M Tram Stop inst	0	05-Oct-09		464
A2669	Access for E&M Tram Stop installation (01C McDon	0	04-Nov-09		229
A2670	Install LV Power Supply and LV Power Equipment	25	04-Nov-09	12-Jan-10	176
A2673	Install Telecon Equipment	20	13-Jan-10	09-Feb-10	186
A2675	Install Station Control Equipment + AFC Equipment	25	13-Jan-10	16-Feb-10	176
A2680	Package Test Tramstop	5	17-Feb-10	23-Feb-10	176
Trackworks		532	29-May-(	26-Jul-10	1
12190	Issue Construction Drawings	0		29-May-08*	0
Leith Walk Ch 0-375		216	22-Jul-09	09-Jun-10	0
1st Half (Dummy)		114	22-Jul-09	13-Jan-10	62
A16190	Establish Traffic Management & Temp. Fencing	2	22-Jul-09	23-Jul-09	35
A16200	Excavate box	8	24-Jul-09	08-Sep-09	35
A16210	Excavate, lay and concrete ducts	11	09-Sep-09	23-Sep-09	35
A16220	Excavate and construct OLE bases	11	09-Sep-09	23-Sep-09	35
A16230	Set Track (300m)	14	12-Nov-09	05-Jan-10	0
A16240	Place upper concrete and cure	14	17-Nov-09	08-Jan-10	62
A16250	Street Surface finishes	3	11-Jan-10	13-Jan-10	62

Date	Revision	Checked	Approved
29-Apr-08	Contract Programme 29 April 2008	SCS	

Activity ID	Activity Name	Original Duration	Start	Finish	Total Float
2nd Half (Dummy)		102	14-Jan-10	09-Jun-10	0
A16330	Excavate box	8	14-Jan-10	25-Jan-10	62
A16340	Excavate, lay and concrete ducts	11	26-Jan-10	09-Feb-10	62
A16350	Set Track	14	11-May-:	28-May-10	0
A16360	Place upper concrete and cure	14	14-May-:	03-Jun-10	0
A16370	Street Surface finishes	3	04-Jun-10	08-Jun-10	0
A16380	Remove fencing and Traffic Management	1	09-Jun-10	09-Jun-10	0
London Road Ch 375-450		33	10-Jun-10	26-Jul-10	1
1st Half (Dummy)		17	10-Jun-10	02-Jul-10	1
A16260	Establish Traffic Management & Temp. Fencing	2	10-Jun-10	11-Jun-10	0
A16270	Excavate box	2	14-Jun-10	15-Jun-10	0
A16280	Excavate, lay and concrete ducts	3	16-Jun-10	18-Jun-10	0
A16290	Excavate and construct OLE bases	3	16-Jun-10	18-Jun-10	0
A16300	Set Track (300m)	4	21-Jun-10	24-Jun-10	0
A16310	Place upper concrete and cure	4	24-Jun-10	29-Jun-10	1
A16320	Street Surface finishes	3	30-Jun-10	02-Jul-10	1
2nd Half (Dummy)		16	05-Jul-10	26-Jul-10	1
A16390	Excavate box	2	05-Jul-10	06-Jul-10	1
A16400	Excavate, lay and concrete ducts	3	07-Jul-10	09-Jul-10	1
A16410	Set Track	4	12-Jul-10	15-Jul-10	1
A16420	Place upper concrete and cure	4	15-Jul-10	20-Jul-10	1
A16430	Street Surface finishes	3	21-Jul-10	23-Jul-10	1
A16440	Remove fencing and Traffic Management	1	26-Jul-10	26-Jul-10	1
Roadworks		283	29-May-(	21-Jul-09	59
12200	Issue Construction Drawings	0		29-May-08*	0
Leith Walk Ch 0-375		94	31-Oct-08	26-Mar-09	35
A13540	Dummy	80	31-Oct-08	26-Mar-09	35
London Road Ch 375-450		80	27-Mar-09	21-Jul-09	59
A13570	Dummy	80	27-Mar-09	21-Jul-09	35
Picardy Place (inc.) to St. Andrews Square (exc.)		708	23-Apr-08	11-Mar-11	87
Trackworks		585	29-May-(	08-Oct-10	23
12210	Issue Construction Drawings	0		29-May-08*	0
Picardy Place Ch 450-700		124	15-Apr-10	08-Oct-10	0
Phase 3		60	15-Apr-10	09-Jul-10	0
1st Half (Dummy)		36	15-Apr-10	07-Jun-10	8
A164	Establish Traffic Management & Temp. Fencing	2	15-Apr-10	16-Apr-10	27
A164	Excavate box	2	19-Apr-10	20-Apr-10	27
A164	Excavate, lay and concrete ducts	3	21-Apr-10	23-Apr-10	27
A164	Excavate and construct OLE bases	3	21-Apr-10	23-Apr-10	27
A164	Set Track (100m)	4	24-May-:	27-May-10	8
A165	Place upper concrete and cure	4	27-May-:	02-Jun-10	8
A165	Street Surface finishes	3	03-Jun-10	07-Jun-10	8
2nd Half (Dummy)		24	08-Jun-10	09-Jul-10	0
A165	Excavate box	2	08-Jun-10	09-Jun-10	8
A165	Excavate, lay and concrete ducts	3	10-Jun-10	14-Jun-10	8
A165	Set Track	4	25-Jun-10	30-Jun-10	0
A165	Place upper concrete and cure	4	30-Jun-10	05-Jul-10	0
A165	Street Surface finishes	3	06-Jul-10	08-Jul-10	0
A165	Remove fencing and Traffic Management	1	09-Jul-10	09-Jul-10	0
Phase 4		64	12-Jul-10	08-Oct-10	0
A16580	Establish Traffic Management & Temp. Fencing	2	12-Jul-10	13-Jul-10	0
A16590	Excavate box	6	14-Jul-10	21-Jul-10	0

Date	Revision	Checked	Approved
29-Apr-08	Contract Programme 29 April 2008	SCS	

Activity ID	Activity Name	Original Duration	Start	Finish	Total Float
A16600	Excavate, lay and concrete ducts	9	22-Jul-10	07-Sep-10	0
A16610	Excavate and construct OLE bases	9	22-Jul-10	07-Sep-10	0
A16620	Set Track (150m)	16	08-Sep-10	29-Sep-10	0
A16630	Place upper concrete and cure	16	13-Sep-10	04-Oct-10	0
A16640	Street Surface finishes	3	05-Oct-10	07-Oct-10	0
A16650	Remove fencing and Traffic Management	1	08-Oct-10	08-Oct-10	0
York Place Ch 700-850		44	20-Jan-10	22-Mar-10	88
A13660	Dummy	44	20-Jan-10	22-Mar-10	33
A16660	Establish Traffic Management & Temp. Fencing	2	20-Jan-10	21-Jan-10	7
A16670	Excavate box	6	22-Jan-10	29-Jan-10	7
A16680	Excavate, lay and concrete ducts	9	01-Feb-10	11-Feb-10	7
A16690	Excavate and construct OLE bases	9	01-Feb-10	11-Feb-10	7
A16700	Set Track (150m)	11	12-Feb-10	26-Feb-10	7
A16710	Place upper concrete and cure	11	17-Feb-10	03-Mar-10	97
A16720	Street Surface finishes	3	04-Mar-10	08-Mar-10	97
A16730	Remove fencing and Traffic Management	1	09-Mar-10	09-Mar-10	97
York Place Ch 850-1000		44	29-Apr-10	01-Jul-10	93
A13670	Dummy	44	29-Apr-10	01-Jul-10	67
A16740	Establish Traffic Management & Temp. Fencing	2	29-Apr-10	30-Apr-10	27
A16750	Excavate box	6	04-May-:	11-May-10	27
A16760	Excavate, lay and concrete ducts	9	12-May-:	24-May-10	27
A16770	Excavate and construct OLE bases	9	12-May-:	24-May-10	27
A16780	Set Track (150m)	11	28-May-:	14-Jun-10	24
A16790	Place upper concrete and cure	11	03-Jun-10	17-Jun-10	24
A16800	Street Surface finishes	3	18-Jun-10	22-Jun-10	24
A16810	Remove fencing and Traffic Management	1	23-Jun-10	23-Jun-10	24
Picardy Place Tram Stop		639	23-Apr-08	22-Nov-10	156
12220	Issue Construction Drawings	0		23-Apr-08*	0
558	Order REC Supply	0	07-Jun-10		275
610	Civil Engineering And Building Works	65	15-Apr-10	16-Jul-10	53
A2720	Deliver and Install Shelter	10	19-Jul-10	06-Sep-10	28
A4518	Access for visual inspection for E&M Tram Stop ins	0	05-Aug-10		246
A4519	Access for E&M Tram Stop installation (01C Picardy	0	06-Sep-10		28
A4520	Install LV Power Supply and LV Power Equipment	25	06-Sep-10	11-Oct-10	28
A4530	Install Telecon Equipment	20	11-Oct-10	08-Nov-10	40
A4540	Install Station Control Equipment + AFC Equipment	25	11-Oct-10	15-Nov-10	30
A4550	Package Test Tramstop	5	15-Nov-10	22-Nov-10	30
Roadworks		684	29-May-(	11-Mar-11	87
12230	Issue Construction Drawings	0		29-May-08*	0
Picardy Place Ch 450-700		283	20-Jan-10	11-Mar-11	87
Phase 1		20	20-Jan-10	16-Feb-10	7
A13580	Dummy	20	20-Jan-10	16-Feb-10	7
Phase 2		40	17-Feb-10	14-Apr-10	20
A13590	Dummy	40	17-Feb-10	14-Apr-10	20
Phase 3		40	15-Apr-10	11-Jun-10	20
A13600	Dummy	40	15-Apr-10	11-Jun-10	20
Phase 4		64	14-Jun-10	10-Sep-10	126
A13610	Dummy	40	14-Jun-10	10-Sep-10	107
Phase 5		59	11-Oct-10	14-Jan-11	87
A13620	Dummy	40	11-Oct-10	14-Jan-11	87
Phase 6		40	17-Jan-11	11-Mar-11	87
A13630	Dummy	40	17-Jan-11	11-Mar-11	87

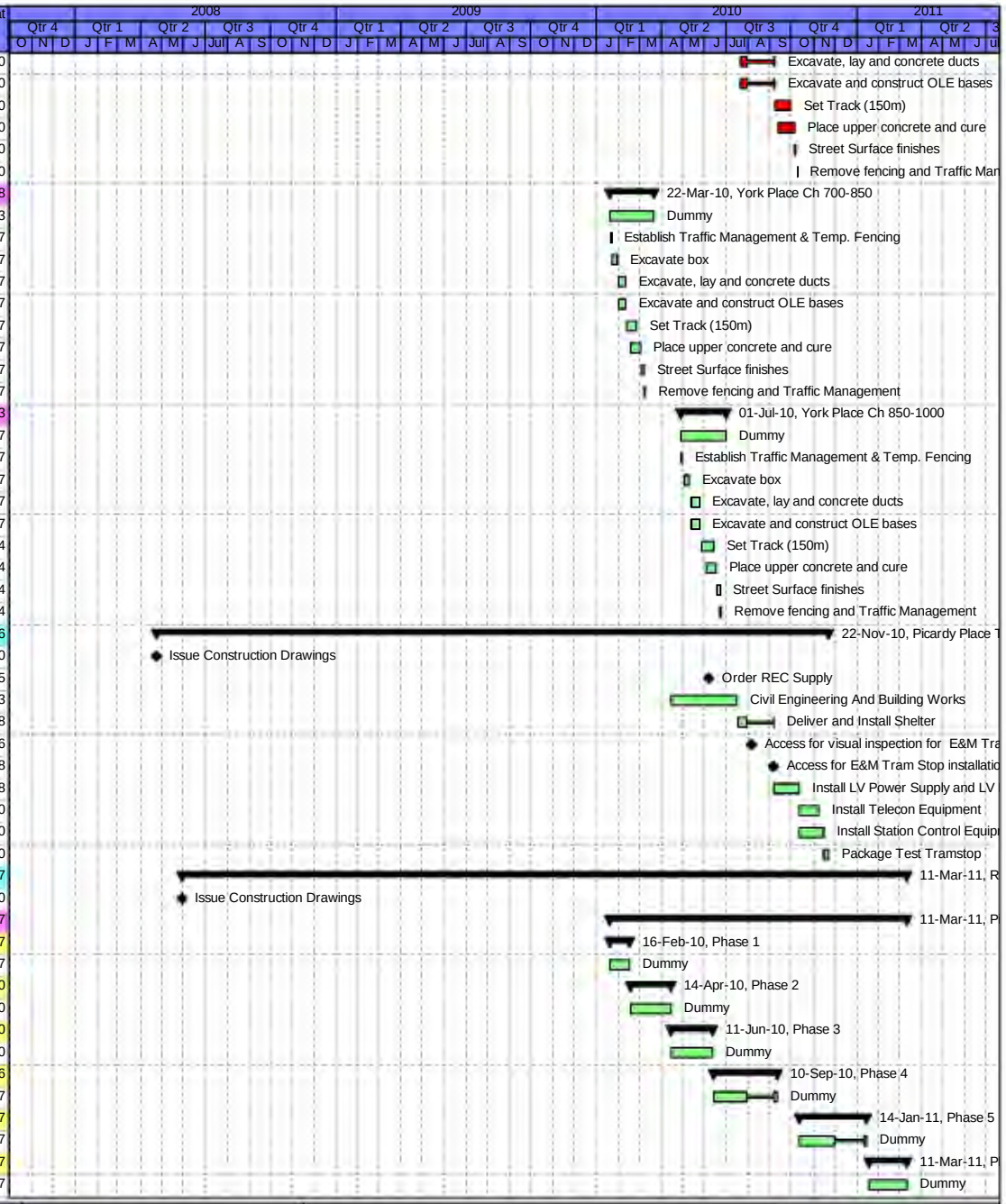

Date	Revision	Checked	Approved
29-Apr-08	Contract Programme 29 April 2008	SCS	

Activity ID	Activity Name	Original Duration	Start	Finish	Total Float
York Place Ch 700-850		70	20-Jan-10	28-Apr-10	27
Phase 1		50	20-Jan-10	30-Mar-10	7
A13680	Dummy	50	20-Jan-10	30-Mar-10	7
Phase 2		20	31-Mar-10	28-Apr-10	27
A13690	Dummy	20	31-Mar-10	28-Apr-10	27
York Place Ch 850-1000		94	29-Apr-10	10-Sep-10	80
Phase 1		50	29-Apr-10	09-Jul-10	87
A13700	Dummy	50	29-Apr-10	09-Jul-10	61
Phase 2		44	12-Jul-10	10-Sep-10	80
A13710	Dummy	20	12-Jul-10	10-Sep-10	61
Cathedral SubStation		174	24-Mar-10	29-Nov-10	151
346	Order REC supply from Scottish Power	0	24-Mar-10		54
356	Civil Engineering and Building Works	65	15-Apr-10	16-Jul-10	54
A2838	Access for visual inspection forE&M substation insta	0	17-Jun-10		281
A2839	Access for E&M substation installation (01C Cathrec	0	19-Jul-10		55
A5580	Power Infeed from Public Net available inc HV cable	0	19-Jul-10		54
A5590	Install LV Power Supply and LV Power Equipment	15	19-Jul-10	10-Sep-10	30
A5600	Installation of TPS Equipment	30	06-Sep-10	15-Oct-10	30
A5610	Install Telecom and Scada	15	27-Sep-10	15-Oct-10	41
A5620	Testing and Commissioning	14	18-Oct-10	04-Nov-10	41
A6120	Installation of SIG-interlocking cubicle	10	02-Aug-10	13-Aug-10	106
A6130	Commissioning of SIG -interlocking cubicle	5	23-Nov-10	29-Nov-10	35
St. Andrews Square (inc.) to Princes Street West (exc.)		662	28-Mar-08	29-Nov-10	151
Trackworks		418	29-May-(	11-Feb-10	227
12240	Issue Construction Drawings	0		29-May-08*	0
St Andrews Square to Waverley Bridge Ch 1000-1360		101	09-Sep-09	11-Feb-10	227
A13530	Dummy	60	09-Sep-09	05-Jan-10	211
A16820	Establish Traffic Management & Temp. Fencing	2	09-Sep-09	10-Sep-09	39
A16830	Excavate box	15	11-Sep-09	01-Oct-09	39
A16840	Excavate, lay and concrete ducts	22	02-Oct-09	02-Nov-09	39
A16850	Excavate and construct OLE bases	22	02-Oct-09	02-Nov-09	39
A16860	Set Track (360m)	24	27-Nov-09	03-Feb-10	9
A16870	Place upper concrete and cure	23	06-Jan-10	05-Feb-10	115
A16880	Street Surface finishes	3	08-Feb-10	10-Feb-10	115
A16890	Remove fencing and Traffic Management	1	11-Feb-10	11-Feb-10	115
Roadworks		391	29-May-(	05-Jan-10	190
12250	Issue Construction Drawings	0		29-May-08*	0
St Andrews Square to Waverley Bridge Ch 1000-1360		74	09-Sep-09	05-Jan-10	190
A13520	Dummy	60	09-Sep-09	05-Jan-10	166
Princes Street West Tram Stop		390	29-Apr-08	23-Nov-09	401
12290	Issue Construction Drawings	0		29-Apr-08*	0
578	Order REC Supply	0	08-Jun-09		520
630	Civil Engineering And Building Works	65	05-Feb-09	08-May-09	292
A2780	Deliver and Install Shelter	10	20-Jul-09	07-Sep-09	218
A4598	Access for visual inspection for E&M Tram Stop inst	0	06-Aug-09		477
A4599	Access for E&M Tram Stop installation (01D Princes	0	07-Sep-09		256
A4600	Install LV Power Supply and LV Power Equipment	25	07-Sep-09	12-Oct-09	218
A4610	Install Telecon Equipment	20	12-Oct-09	09-Nov-09	228
A4620	Install Station Control Equipment + AFC Equipment	25	12-Oct-09	16-Nov-09	218
A4630	Package Test Tramstop	5	16-Nov-09	23-Nov-09	275
St Andrews Square Tram Stop		662	28-Mar-08	29-Nov-10	151
12260	Issue Construction Drawings	0		28-Mar-08*	0

Date	Revision	Checked	Approved
29-Apr-08	Contract Programme 29 April 2008	SCS	

Activity ID	Activity Name	Original Duration	Start	Finish	Total Float
568	Order REC Supply	0	30-Sep-09		439
620	Civil Engineering And Building Works	65	09-Sep-09	12-Jan-10	166
A2750	Deliver and Install Shelter	10	11-Nov-09	25-Nov-09	161
A4558	Access for visual inspection for E&M Tram Stop inst	0	26-Oct-09		449
A4559	Access for E&M Tram Stop installation (01C St. And	0	25-Nov-09		214
A4560	Install LV Power Supply and LV Power Equipment	25	25-Nov-09	03-Feb-10	161
A4570	Install Telecon Equipment	20	03-Feb-10	03-Mar-10	171
A4580	Install Station Control Equipment + AFC Equipment	25	03-Feb-10	10-Mar-10	161
A4590	Package Test Tramstop	5	10-Mar-10	17-Mar-10	204
A6150	Installation of SIG-interlocking cubicle	15	13-Jan-10	03-Feb-10	244
A6160	Commissioning of SIG -interlocking cubicle	5	23-Nov-10	29-Nov-10	35
01D Princes Street (inc.) to Haymarket (exc.)		539	28-Mar-08	07-Jun-10	274
E & M Installation		65	03-Mar-10	07-Jun-10	274
A3803	Access for visual inspection for E&M wayside install	0	03-Mar-10		296
A3804	Access for E&M wayside installation (01D)	0	05-Apr-10		275
A3805	Installation of poles and building fixings	10	05-Apr-10	16-Apr-10	8
A3810	Overhead Catenary Line	24	19-Apr-10	21-May-10	8
A3818	Access for visual inspection to cable pits for cable la	0	31-Mar-10		276
A3819	Access to cable pits for cable laying (01D)	0	04-May-		255
A3820	Install Electrical Cables	12	04-May-	19-May-10	105
A3830	Install Fibre Optic Cables	12	04-May-	19-May-10	117
A3840	Install Signalling Wayside Equipment	12	20-May-	07-Jun-10	105
Princes Street West (inc.) to Shadwick Place (exc.)		399	21-May-	08-Jan-10	251
Roadworks		399	21-May-	08-Jan-10	251
12270	Issue Construction Drawings	0		21-May-08*	0
Lothian Road Junction Ch 440-280		250	05-Jan-09	08-Jan-10	251
Phase 1		21	05-Jan-09	02-Feb-09	4
A8250	Establish Traffic Management & Temp. Fencing	2	05-Jan-09	06-Jan-09	4
A8260	Take down permanent traffic signs / signals	5	07-Jan-09	13-Jan-09	4
A8270	Excavate traffic islands	3	14-Jan-09	16-Jan-09	4
A8280	Subbase	2	19-Jan-09	20-Jan-09	4
A8290	Temporary surfacing	3	21-Jan-09	23-Jan-09	4
A8300	Temporary Traffic signals / signs / white lines	5	26-Jan-09	30-Jan-09	4
A8310	Remove fencing and Traffic Management	1	02-Feb-09	02-Feb-09	4
Phase 2		39	03-Feb-09	27-Mar-09	38
A8490	Establish Traffic Management & Temp. Fencing	2	03-Feb-09	04-Feb-09	61
A8500	Excavate North kerbline	2	05-Feb-09	06-Feb-09	61
A8510	Relay North kerbs	5	06-Feb-09	12-Feb-09	61
A8520	Reset Gullies	5	09-Feb-09	13-Feb-09	61
A8530	Plane out wearing course	2	16-Feb-09	17-Feb-09	61
A8540	Resurface road	3	23-Mar-09	25-Mar-09	38
A8550	Pavement (1m strip)	5	13-Feb-09	19-Feb-09	63
A8560	White Lines	1	26-Mar-09	26-Mar-09	38
A8570	Street Lighting / Road signs	7	13-Feb-09	23-Feb-09	61
A8670	Remove fencing and Traffic Management	1	27-Mar-09	27-Mar-09	38
Phase 3		14	30-Mar-09	17-Apr-09	38
A8580	Establish Traffic Management & Temp. Fencing	2	30-Mar-09	31-Mar-09	38
A8590	Excavate South kerbline	2	01-Apr-09	02-Apr-09	38
A8600	Relay South kerbs	4	02-Apr-09	07-Apr-09	38
A8610	Reset Gullies	4	03-Apr-09	08-Apr-09	38
A8620	Plane out wearing course	1	09-Apr-09	09-Apr-09	38
A8630	Resurface road	3	13-Apr-09	15-Apr-09	38

Date	Revision	Checked	Approved
29-Apr-08	Contract Programme 29 April 2008	SCS	

Activity ID	Activity Name	Original Duration	Start	Finish	Total Float
A8640	Pavement (1m strip)	4	08-Apr-09	14-Apr-09	40
A8650	White Lines	1	16-Apr-09	16-Apr-09	38
A8660	Street Lighting / Road signs	6	08-Apr-09	16-Apr-09	38
A8665	Remove fencing and Traffic Management	1	17-Apr-09	17-Apr-09	38
Phase 4a		47	21-Oct-09	08-Jan-10	251
A9000	Establish Traffic Management & Temp. Fencing	2	21-Oct-09	22-Oct-09	208
A9010	Excavat for new kerb lines & channel	4	23-Oct-09	28-Oct-09	208
A9020	Lay new kerbs	4	26-Oct-09	29-Oct-09	208
A9030	Reset Gullies	4	27-Oct-09	30-Oct-09	213
A9040	Surface new channels	4	02-Nov-09	05-Nov-09	213
A9050	Pavement	25	30-Oct-09	07-Jan-10	208
A9060	Rebuild Traffic Islands	15	06-Nov-09	26-Nov-09	213
A9080	Street Lighting / Road signs	5	20-Nov-09	26-Nov-09	213
A9130	Remove fencing and Traffic Management	1	08-Jan-10	08-Jan-10	208
Princes Street Ch 280-0,1980-1360		152	03-Feb-09	08-Sep-09	4
North Channel		79	03-Feb-09	27-May-09	74
A13840	Establish Traffic Management & Temp. Fencing	2	03-Feb-09	04-Feb-09	21
A13850	Excavate North kerbline	19	05-Feb-09	03-Mar-09	21
A13860	Relay North kerbs	48	12-Feb-09	21-Apr-09	21
A13870	Reset Gullies	48	19-Feb-09	28-Apr-09	21
A13880	Plane out wearing course	10	29-Apr-09	13-May-09	21
A13890	Resurface road	7	14-May-(	22-May-09	21
A13900	Pavement (1m strip)	48	19-Feb-09	28-Apr-09	68
A13910	White Lines	1	26-May-(	26-May-09	50
A13920	Street Lighting / Road signs	5	22-Apr-09	28-Apr-09	68
A13930	Remove fencing and Traffic Management	1	27-May-(	27-May-09	50
South Channel		152	03-Feb-09	08-Sep-09	4
A13940	Establish Traffic Management & Temp. Fencing	2	03-Feb-09	04-Feb-09	28
A13950	Excavate South kerbline	19	05-Feb-09	03-Mar-09	28
A13960	Relay South kerbs	48	12-Feb-09	21-Apr-09	28
A13970	Reset Gullies	48	19-Feb-09	28-Apr-09	28
A13980	Plane out wearing course	10	29-Apr-09	13-May-09	28
A13990	Resurface road	30	18-Jun-09	29-Jul-09	4
A14000	Pavement (1m strip)	48	19-Feb-09	28-Apr-09	69
A14010	White Lines	1	30-Jul-09	30-Jul-09	4
A14020	Street Lighting / Road signs	5	22-Apr-09	28-Apr-09	69
A14030	Remove fencing and Traffic Management	3	31-Jul-09	08-Sep-09	4
Trackworks (710m)		352	21-May-(	20-Oct-09	122
12280	Issue Construction Drawings	0		21-May-08*	0
Lothian Road Junction Ch 440-280		182	03-Feb-09	20-Oct-09	122
Phase 2		35	03-Feb-09	23-Mar-09	269
1st half		19	03-Feb-09	27-Feb-09	2
A8320	Establish Traffic Management & Temp. Fencing	2	03-Feb-09	04-Feb-09	4
A8330	Excavate box	2	05-Feb-09	06-Feb-09	4
A8340	Excavate, lay and concrete ducts	3	09-Feb-09	11-Feb-09	4
A8350	Excavate and construct OLE bases	3	09-Feb-09	11-Feb-09	4
A8370	Set Track (100m)	4	16-Feb-09	19-Feb-09	2
A8380	Place upper concrete and cure	4	19-Feb-09	24-Feb-09	2
A8390	Street Surface finishes	3	25-Feb-09	27-Feb-09	2
2nd half		16	02-Mar-09	23-Mar-09	269
A8410	Excavate box	2	02-Mar-09	03-Mar-09	2
A8420	Excavate, lay and concrete ducts	3	04-Mar-09	06-Mar-09	2

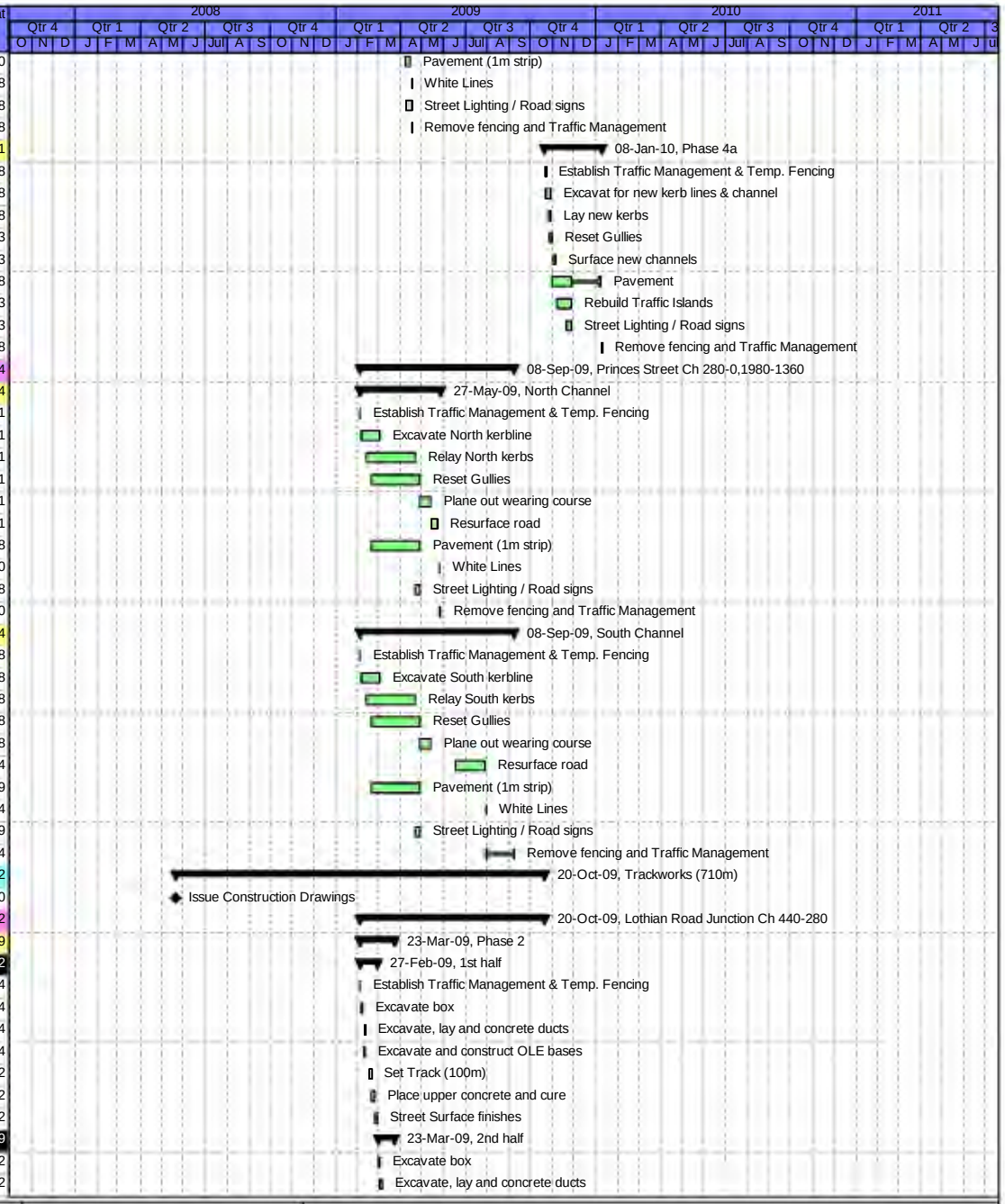

Date	Revision	Checked	Approved
29-Apr-08	Contract Programme 29 April 2008	SCS	

Activity ID	Activity Name	Original Duration	Start	Finish	Total Float
A8450	Set Track	4	09-Mar-09	12-Mar-09	2
A8460	Place upper concrete and cure	4	12-Mar-09	17-Mar-09	38
A8470	Street Surface finishes	3	18-Mar-09	20-Mar-09	38
A8480	Remove fencing and Traffic Management	1	23-Mar-09	23-Mar-09	231
Phase 3a		67	20-Apr-09	23-Jul-09	37
1st half		51	20-Apr-09	01-Jul-09	2
A8680	Establish Traffic Management & Temp. Fencing	2	20-Apr-09	21-Apr-09	38
A8690	Excavate box	1	22-Apr-09	22-Apr-09	38
A8700	Excavate, lay and concrete ducts	2	23-Apr-09	24-Apr-09	38
A8710	Excavate and construct OLE bases	2	23-Apr-09	24-Apr-09	38
A8730	Set Track (30m)	4	18-Jun-09	23-Jun-09	2
A8740	Place upper concrete and cure	4	23-Jun-09	26-Jun-09	2
A8750	Street Surface finishes	3	29-Jun-09	01-Jul-09	2
2nd half		16	02-Jul-09	23-Jul-09	37
A8760	Excavate box	1	02-Jul-09	02-Jul-09	2
A8770	Excavate, lay and concrete ducts	2	03-Jul-09	06-Jul-09	2
A8800	Set Track	4	09-Jul-09	14-Jul-09	0
A8810	Place upper concrete and cure	4	14-Jul-09	17-Jul-09	13
A8820	Street Surface finishes	3	20-Jul-09	22-Jul-09	13
A8830	Remove fencing and Traffic Management	1	23-Jul-09	23-Jul-09	13
Phase 4		62	24-Jul-09	20-Oct-09	122
1st half		48	24-Jul-09	30-Sep-09	4
A8840	Establish Traffic Management & Temp. Fencing	2	24-Jul-09	27-Jul-09	13
A8850	Excavate box	1	28-Jul-09	28-Jul-09	13
A8860	Excavate, lay and concrete ducts	2	29-Jul-09	30-Jul-09	13
A8870	Excavate and construct OLE bases	2	29-Jul-09	30-Jul-09	13
A8890	Set Track (30m)	4	17-Sep-09	22-Sep-09	4
A8900	Place upper concrete and cure	4	22-Sep-09	25-Sep-09	4
A8910	Street Surface finishes	3	28-Sep-09	30-Sep-09	4
2nd half		14	01-Oct-09	20-Oct-09	122
A8920	Excavate box	1	01-Oct-09	01-Oct-09	4
A8930	Excavate, lay and concrete ducts	2	02-Oct-09	05-Oct-09	4
A8960	Set Track	4	06-Oct-09	09-Oct-09	4
A8970	Place upper concrete and cure	4	09-Oct-09	14-Oct-09	108
A8980	Street Surface finishes	3	15-Oct-09	19-Oct-09	108
A8990	Remove fencing and Traffic Management	1	20-Oct-09	20-Oct-09	108
Princes Street Ch 280-0,1980-1360		125	03-Feb-09	30-Jul-09	179
Phase 1		125	03-Feb-09	30-Jul-09	179
A13760	Establish Traffic Management & Temp. Fencing	2	03-Feb-09	04-Feb-09	4
A13770	Excavate box	36	05-Feb-09	26-Mar-09	4
A13780	Excavate, lay and concrete ducts	54	12-Feb-09	29-Apr-09	177
A13790	Excavate and construct OLE bases	54	12-Feb-09	29-Apr-09	177
A13810	Set Track (950m)	54	31-Mar-09	17-Jun-09	2
A13820	Place Upper Concrete and Cure	54	03-Apr-09	22-Jun-09	141
A13830	Street Surface finishes	28	23-Jun-09	30-Jul-09	141
Shandwick Place (inc.) to Haymarket (exc.)		532	28-Mar-08	26-May-10	281
Shandwick Place Tram Stop		508	28-Mar-08	22-Apr-10	305
12300	Issue Construction Drawings	0		28-Mar-08*	0
588	Order REC Supply	0	04-Nov-09		414
640	Civil Engineering And Building Works	65	11-Sep-09	14-Jan-10	164
A2810	Deliver and Install Shelter	10	20-Jan-10	03-Feb-10	136
A4638	Access for visual inspection for E&M Tram Stop inst	0	04-Jan-10		399

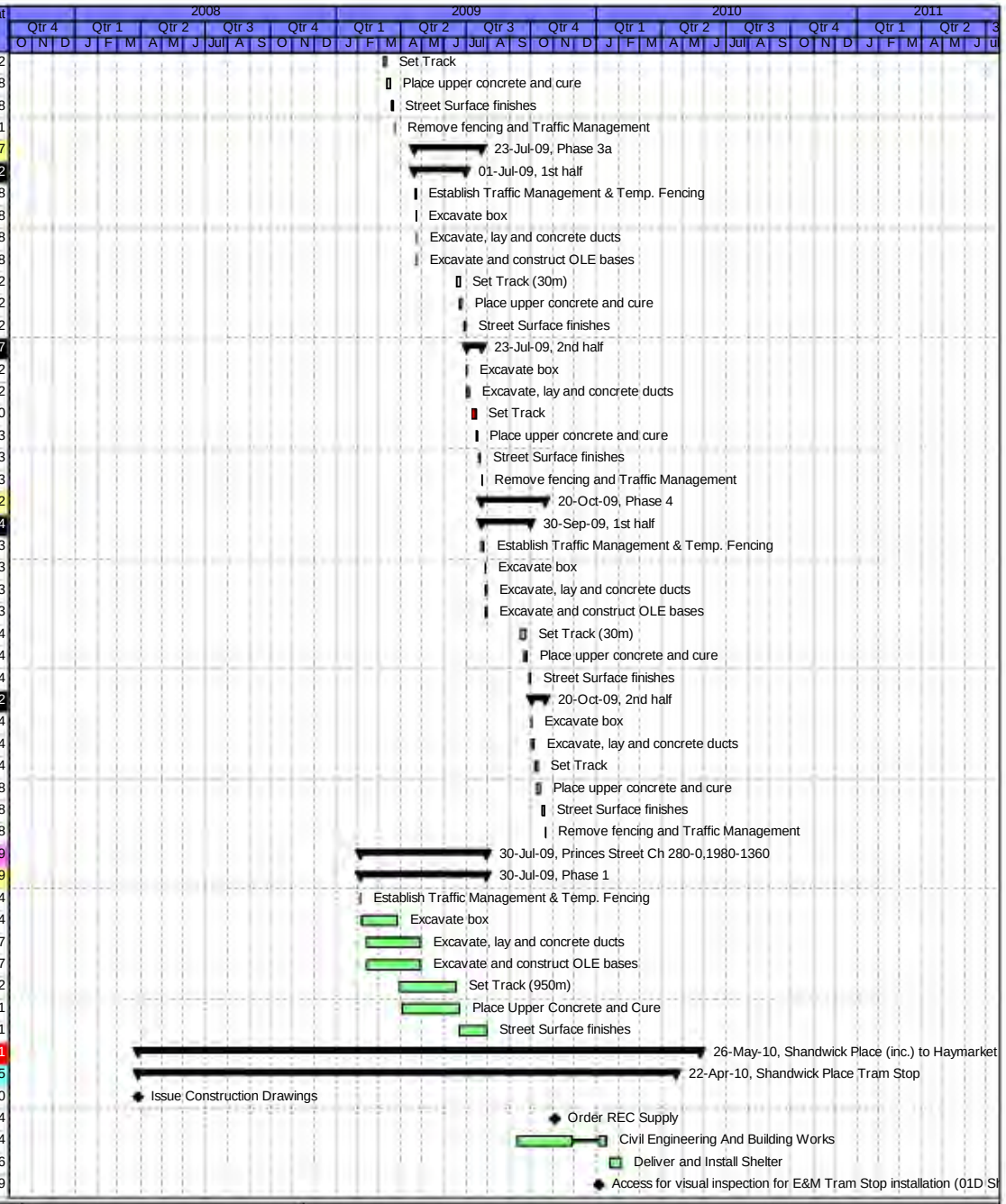

Date	Revision	Checked	Approved
29-Apr-08	Contract Programme 29 April 2008	SCS	

USB00000080_0020

Activity ID	Activity Name	Original Duration	Start	Finish	Total Float
A4639	Access for E&M Tram Stop installation (01D Shadw	0	03-Feb-10		164
A4640	Install LV Power Supply and LV Power Equipment	25	03-Feb-10	10-Mar-10	136
A4650	Install Telecon Equipment	20	10-Mar-10	08-Apr-10	146
A4660	Install Station Control Equipment + AFC Equipment	25	10-Mar-10	15-Apr-10	136
A4670	Package Test Tramstop	5	15-Apr-10	22-Apr-10	136
Roadworks		495	21-May-(	26-May-10	163
12310	Issue Construction Drawings	0		21-May-08*	0
Haymarket Ch 1250-1125		221	05-Jan-09	13-Nov-09	280
Phase 1		17	05-Jan-09	27-Jan-09	4
A6390	Establish Traffic Management & Temp. Fencing	2	05-Jan-09	06-Jan-09	4
A6400	Remove island surfacing and exc. to formation	4	07-Jan-09	12-Jan-09	4
A6410	Construct Kerb lines	2	13-Jan-09	14-Jan-09	4
A6420	Move Gullies	2	15-Jan-09	16-Jan-09	4
A6430	Sub base	2	19-Jan-09	20-Jan-09	4
A6440	Roadbase/base course/wearing course/temp ramps	3	21-Jan-09	23-Jan-09	4
A6450	Pavement Works	5	15-Jan-09	21-Jan-09	7
A6460	White Lines	1	26-Jan-09	26-Jan-09	4
A6470	Street Lighting / Traffic Signals / Road Signs	5	15-Jan-09	21-Jan-09	7
A6475	Remove fencing and Traffic Management	1	27-Jan-09	27-Jan-09	4
Phase 2		21	28-Jan-09	25-Feb-09	4
A6480	Establish Traffic Management & Temp. Fencing	2	28-Jan-09	29-Jan-09	4
A6490	Excavate for new channel and kerb line / remove e>	2	30-Jan-09	02-Feb-09	4
A6500	Construct Kerb lines	2	03-Feb-09	04-Feb-09	4
A6510	Reset Gullies	1	05-Feb-09	05-Feb-09	6
A6520	Surface new channel	1	06-Feb-09	06-Feb-09	6
A6540	Pavement Works	15	05-Feb-09	25-Feb-09	4
A6550	White Lines	1	09-Feb-09	09-Feb-09	6
A6560	Street Lighting / Traffic Signals / Road Signs	3	05-Feb-09	09-Feb-09	6
A6565	Remove fencing and Traffic Management	1	12-Feb-09	12-Feb-09	4
Phase 4a		22	30-Mar-09	29-Apr-09	16
A6730	Establish Traffic Management & Temp. Fencing	2	30-Mar-09	31-Mar-09	16
A6740	Remove island surfacing and exc. to formation	5	01-Apr-09	07-Apr-09	16
A6750	Construct Kerb lines	4	08-Apr-09	14-Apr-09	16
A6760	Move Gullies	2	15-Apr-09	16-Apr-09	16
A6770	Sub base	3	17-Apr-09	21-Apr-09	16
A6775	Plane off wearing course	1	22-Apr-09	22-Apr-09	16
A6780	Roadbase/base course/wearing course/temp ramps	3	23-Apr-09	27-Apr-09	16
A6790	Pavement Works	6	15-Apr-09	22-Apr-09	20
A6800	White Lines	1	28-Apr-09	28-Apr-09	16
A6810	Street Lighting / Traffic Signals / Road Signs	7	15-Apr-09	23-Apr-09	19
A6815	Remove fencing and Traffic Management	1	29-Apr-09	29-Apr-09	16
Phase 4b		19	30-Apr-09	28-May-09	18
A6820	Establish Traffic Management & Temp. Fencing	2	30-Apr-09	01-May-09	16
A6830	Remove island surfacing and exc. to formation	1	05-May-(	05-May-09	16
A6840	Construct Kerb lines	4	06-May-(	11-May-09	16
A6850	Move Gullies	2	12-May-(	13-May-09	16
A6860	Sub base	3	14-May-(	18-May-09	16
A6870	Plane off wearing course	1	19-May-(	19-May-09	16
A6880	Roadbase/base course/wearing course/temp ramps	3	20-May-(	22-May-09	16
A6890	Pavement Works	12	12-May-(	28-May-09	18
A6900	White Lines	1	26-May-(	26-May-09	16
A6910	Street Lighting / Traffic Signals / Road Signs	7	12-May-(	20-May-09	19

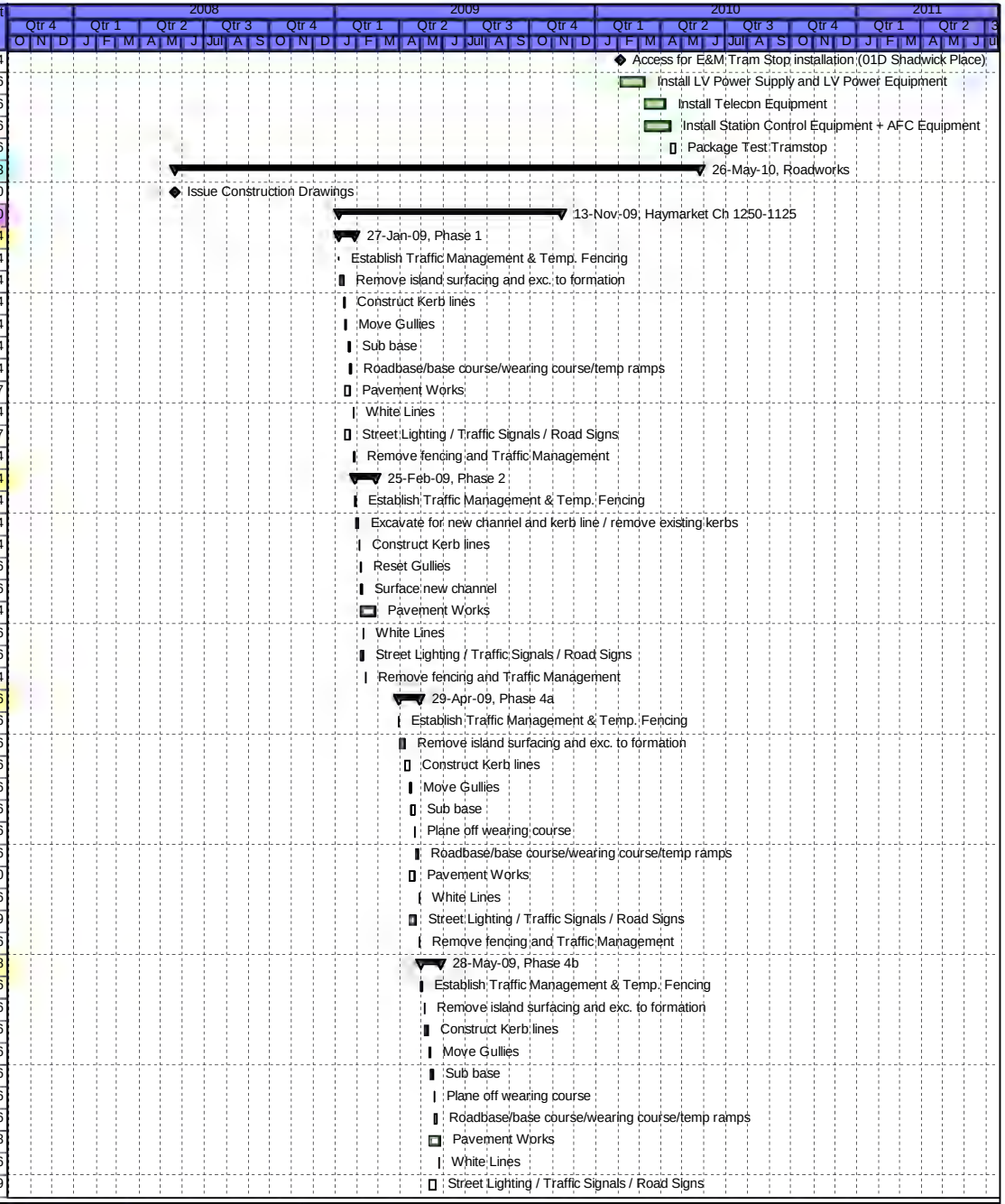

Date	Revision	Checked	Approved
29-Apr-08	Contract Programme 29 April 2008	SCS	

Activity ID	Activity Name	Original Duration	Start	Finish	Total Float
A6915	Remove fencing and Traffic Management	1	27-May-(	27-May-09	16
Phase 6b		49	30-Jul-09	07-Oct-09	275
A7240	Establish Traffic Management & Temp. Fencing	2	30-Jul-09	31-Jul-09	235
A7250	Excavate for new channel and kerb line / remove e>	2	07-Sep-09	08-Sep-09	235
A7260	Construct Kerb lines	5	09-Sep-09	15-Sep-09	235
A7270	Reset Gullies	5	10-Sep-09	16-Sep-09	247
A7280	Surface new channel	2	17-Sep-09	18-Sep-09	247
A7290	Pavement Works	15	16-Sep-09	06-Oct-09	235
A7310	Street Lighting / Traffic Signals / Road Signs	7	16-Sep-09	24-Sep-09	243
A7315	Remove fencing and Traffic Management	1	07-Oct-09	07-Oct-09	235
Phase 7		15	26-Oct-09	13-Nov-09	280
A7320	Establish Traffic Management & Temp. Fencing	2	26-Oct-09	27-Oct-09	223
A7330	Replace north junction kerb line	6	28-Oct-09	04-Nov-09	223
A7340	Rebuild splitter island	6	05-Nov-09	12-Nov-09	223
A7350	White Lines / Traffic Signals / Road Signs	4	28-Oct-09	02-Nov-09	231
A7355	Remove fencing and Traffic Management	1	13-Nov-09	13-Nov-09	223
Torphicen Ch 1125-940		47	19-Mar-10	26-May-10	163
Phase 3		47	19-Mar-10	26-May-10	163
North Pavement		13	19-Mar-10	07-Apr-10	144
A7680	Establish Traffic Management & Temp. Fencing	2	19-Mar-10	22-Mar-10	120
A7690	Replace north kerb line	10	23-Mar-10	06-Apr-10	120
A7695	Remove fencing and Traffic Management	1	07-Apr-10	07-Apr-10	120
South Pavement		14	08-Apr-10	27-Apr-10	146
A7700	Establish Traffic Management & Temp. Fencing	2	08-Apr-10	09-Apr-10	120
A7710	Excavate for new channel and kerb line / remove e>	2	12-Apr-10	13-Apr-10	120
A7720	Construct Kerb lines	3	14-Apr-10	16-Apr-10	120
A7730	Reset Gullies	2	19-Apr-10	20-Apr-10	120
A7740	Surface new channel	1	21-Apr-10	21-Apr-10	120
A7750	Pavement Works	7	19-Apr-10	27-Apr-10	120
A7760	Street Lighting / Traffic Signals / Road Signs	3	19-Apr-10	21-Apr-10	120
A7765	Remove fencing and Traffic Management	1	22-Apr-10	22-Apr-10	120
Splitter Island		23	23-Apr-10	26-May-10	163
A7770	Establish Traffic Management & Temp. Fencing	2	23-Apr-10	26-Apr-10	120
A7780	Excavate for new channel and kerb line / remove e>	2	27-Apr-10	28-Apr-10	120
A7790	Construct Kerb lines	4	28-Apr-10	04-May-10	120
A7800	Reset Gullies	4	29-Apr-10	05-May-10	125
A7810	Surface new channel	1	06-May-:	06-May-10	125
A7820	Pavement Works	16	05-May-:	26-May-10	120
A7830	Street Lighting / Traffic Signals / Road Signs	3	05-May-:	07-May-10	124
A7835	Remove fencing and Traffic Management	1	14-May-:	14-May-10	120
West Maitland Ch 940-850		19	06-Jan-10	01-Feb-10	4
Phase 1		19	06-Jan-10	01-Feb-10	4
South Pavement		11	06-Jan-10	20-Jan-10	4
A7840	Establish Traffic Management & Temp. Fencing	2	06-Jan-10	07-Jan-10	4
A7850	Excavate for new channel and kerb line / remove e>	2	08-Jan-10	11-Jan-10	4
A7860	Construct Kerb lines	4	11-Jan-10	14-Jan-10	4
A7870	Reset Gullies	4	12-Jan-10	15-Jan-10	4
A7880	Surface new channel	2	18-Jan-10	19-Jan-10	4
A7885	Remove fencing and Traffic Management	1	20-Jan-10	20-Jan-10	4
North Pavement		8	21-Jan-10	01-Feb-10	4
A7890	Establish Traffic Management & Temp. Fencing	2	21-Jan-10	22-Jan-10	4
A7900	Excavate for new channel and kerb line / remove e>	1	25-Jan-10	25-Jan-10	4

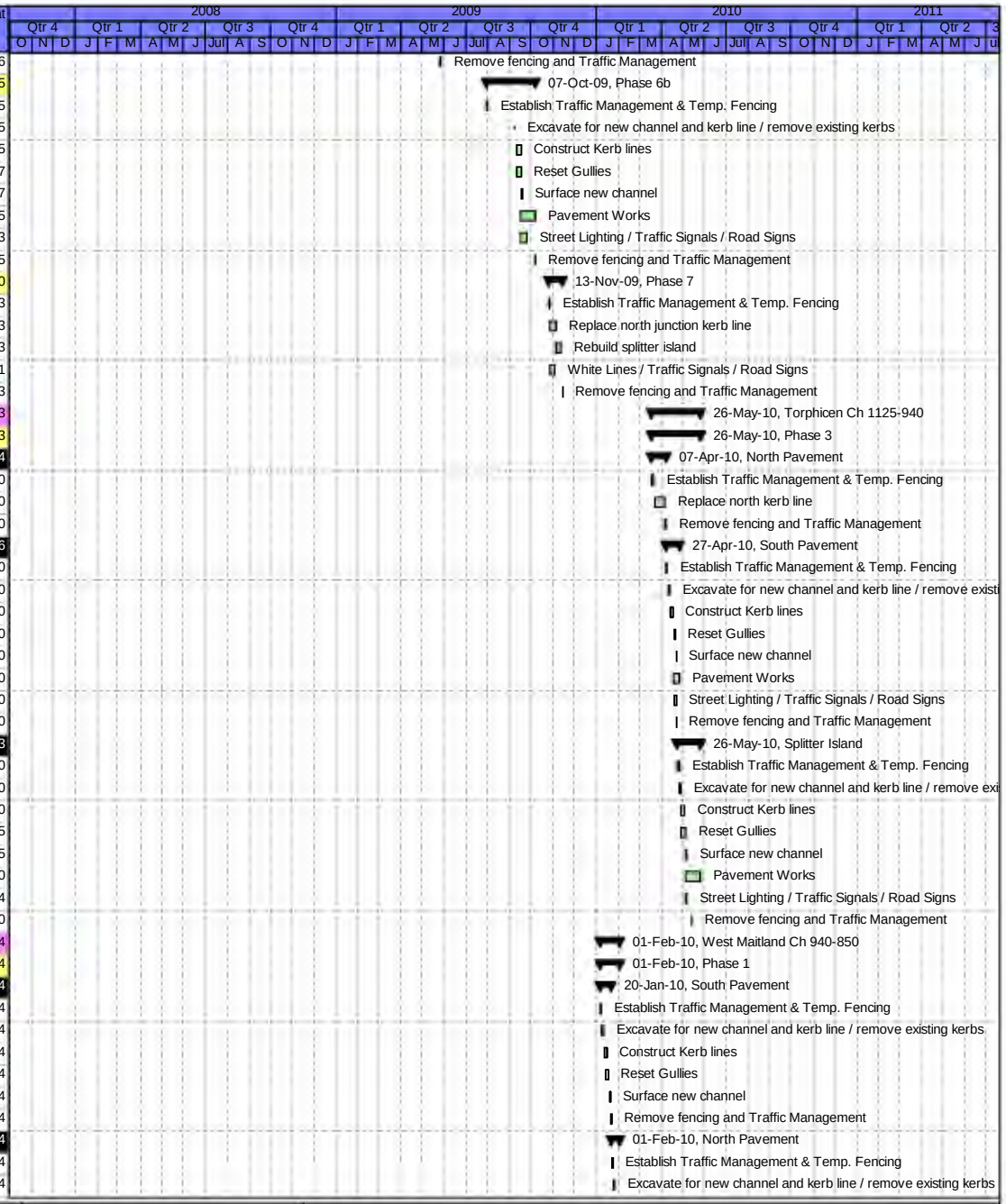

Date	Revision	Checked	Approved
29-Apr-08	Contract Programme 29 April 2008	SCS	

Activity ID	Activity Name	Original Duration	Start	Finish	Total Float
A7910	Construct Kerb lines	2	26-Jan-10	27-Jan-10	4
A7920	Reset Gullies	1	28-Jan-10	28-Jan-10	4
A7930	Surface new channel	1	29-Jan-10	29-Jan-10	4
A7935	Remove fencing and Traffic Management	1	01-Feb-10	01-Feb-10	4
Shandwick Ch 850-440		74	09-Sep-09	05-Jan-10	4
Phase 1		74	09-Sep-09	05-Jan-10	4
A8180	Establish Traffic Management & Temp. Fencing	2	09-Sep-09	10-Sep-09	4
A8190	Excavate for new channel and kerb line / remove e	18	11-Sep-09	06-Oct-09	4
A8200	Construct Kerb lines	23	16-Sep-09	16-Oct-09	4
A8210	Reset Gullies	15	30-Sep-09	20-Oct-09	24
A8220	Surface new channel	9	21-Oct-09	02-Nov-09	24
A8230	Pavement Works	31	19-Oct-09	04-Jan-10	4
A8240	Street Lighting / Traffic Signals / Road Signs	7	19-Oct-09	27-Oct-09	28
A8245	Remove fencing and Traffic Management	1	05-Jan-10	05-Jan-10	4
Trackwork		448	21-May-(	18-Mar-10	26
12320	Issue Construction Drawings	0		21-May-08*	0
Haymarket Ch 1250-1125		177	13-Feb-09	23-Oct-09	4
Phase 3		31	13-Feb-09	27-Mar-09	16
1st half		15	13-Feb-09	05-Mar-09	4
A6570	Establish Traffic Management & Temp. Fencing	2	13-Feb-09	16-Feb-09	4
A6580	Excavate box	1	17-Feb-09	17-Feb-09	4
A6590	Excavate, lay and concrete ducts	2	18-Feb-09	19-Feb-09	4
A6600	Excavate and construct OLE bases	2	18-Feb-09	19-Feb-09	4
A6620	Set Track (54m)	4	20-Feb-09	25-Feb-09	4
A6630	Place upper concrete and cure	4	25-Feb-09	02-Mar-09	4
A6640	Street Surface finishes	3	03-Mar-09	05-Mar-09	4
2nd half		16	06-Mar-09	27-Mar-09	16
A6650	Excavate box	1	06-Mar-09	06-Mar-09	4
A6660	Excavate, lay and concrete ducts	2	09-Mar-09	10-Mar-09	4
A6690	Set Track	4	13-Mar-09	18-Mar-09	2
A6700	Place upper concrete and cure	4	18-Mar-09	23-Mar-09	16
A6710	Street Surface finishes	3	24-Mar-09	26-Mar-09	16
A6720	Remove fencing and Traffic Management	1	27-Mar-09	27-Mar-09	16
Phase 5		45	28-May-(	29-Jul-09	38
1st half		29	28-May-(	07-Jul-09	2
A6920	Establish Traffic Management & Temp. Fencing	2	28-May-(	29-May-09	16
A6940	Excavate box	1	01-Jun-09	01-Jun-09	16
A6950	Excavate, lay and concrete ducts	2	02-Jun-09	03-Jun-09	16
A6960	Excavate and construct OLE bases	2	02-Jun-09	03-Jun-09	16
A6980	Set Track (54m)	4	24-Jun-09	29-Jun-09	2
A6990	Place upper concrete and cure	4	29-Jun-09	02-Jul-09	2
A7000	Street Surface finishes	3	03-Jul-09	07-Jul-09	2
2nd half		16	08-Jul-09	29-Jul-09	38
A7010	Excavate box	1	08-Jul-09	08-Jul-09	2
A7020	Excavate, lay and concrete ducts	2	09-Jul-09	10-Jul-09	2
A7050	Set Track	4	15-Jul-09	20-Jul-09	0
A7060	Place upper concrete and cure	4	20-Jul-09	23-Jul-09	12
A7070	Street Surface finishes	3	24-Jul-09	28-Jul-09	14
A7075	Remove fencing and Traffic Management	1	29-Jul-09	29-Jul-09	14
Phase 6a		61	30-Jul-09	23-Oct-09	4
1st half		47	30-Jul-09	05-Oct-09	5
A7080	Establish Traffic Management & Temp. Fencing	2	30-Jul-09	31-Jul-09	14

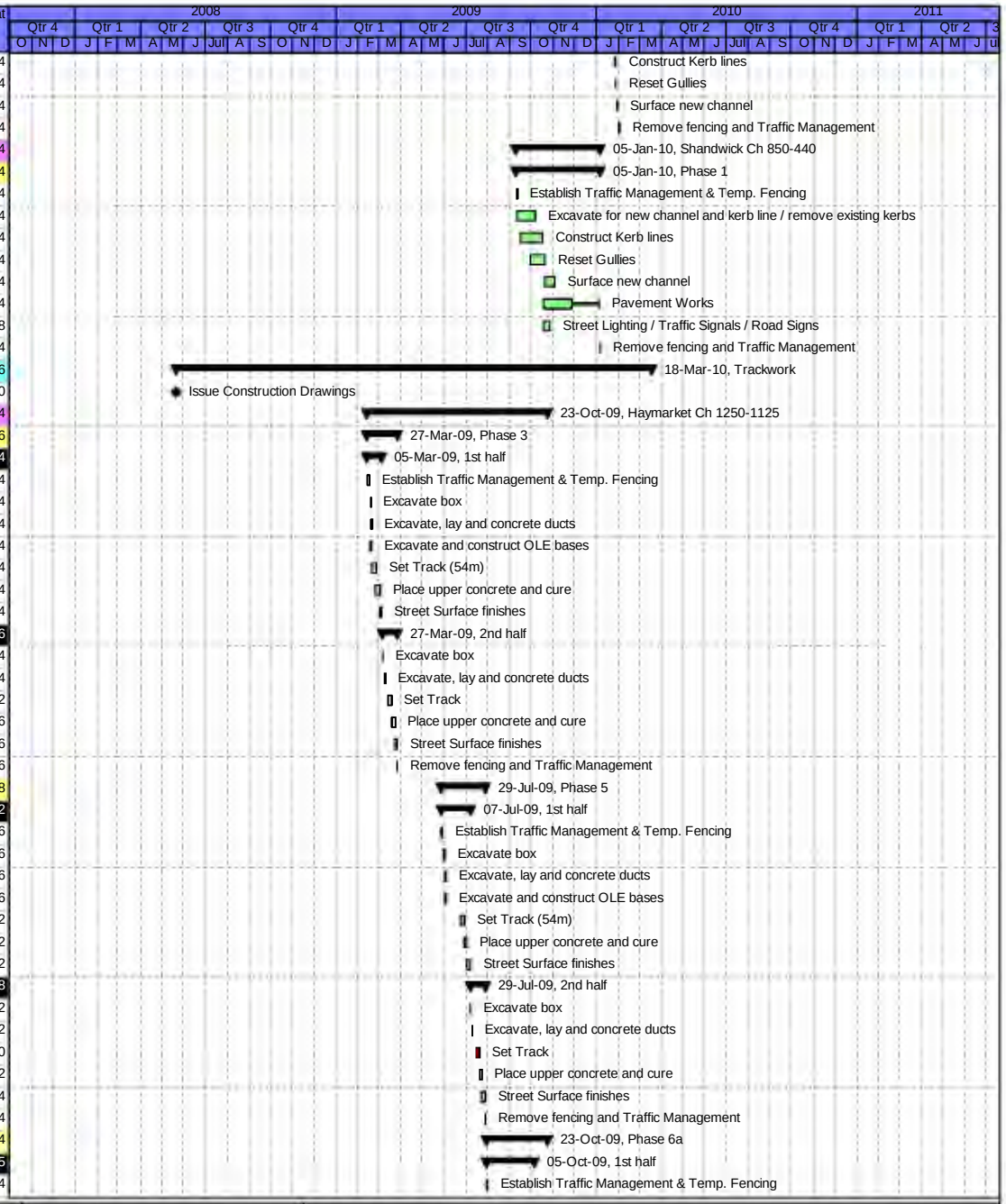

Date	Revision	Checked	Approved
29-Apr-08	Contract Programme 29 April 2008	SCS	

Activity ID	Activity Name	Original Duration	Start	Finish	Total Float
A7100	Excavate box	1	07-Sep-09	07-Sep-09	14
A7110	Excavate, lay and concrete ducts	2	08-Sep-09	09-Sep-09	14
A7120	Excavate and construct OLE bases	2	08-Sep-09	09-Sep-09	14
A7140	Set Track (54m)	3	23-Sep-09	25-Sep-09	5
A7150	Place upper concrete and cure	3	28-Sep-09	30-Sep-09	5
A7160	Street Surface finishes	3	01-Oct-09	05-Oct-09	5
2nd half		14	06-Oct-09	23-Oct-09	4
A7170	Excavate box	1	06-Oct-09	06-Oct-09	5
A7180	Excavate, lay and concrete ducts	2	07-Oct-09	08-Oct-09	5
A7210	Set Track	3	12-Oct-09	14-Oct-09	4
A7220	Place upper concrete and cure	3	15-Oct-09	19-Oct-09	4
A7230	Street Surface finishes	3	20-Oct-09	22-Oct-09	4
A7235	Remove fencing and Traffic Management	1	23-Oct-09	23-Oct-09	4
Torphicen Ch 1125-940		198	30-Mar-09	20-Jan-10	67
Phase 1		126	30-Mar-09	25-Sep-09	24
1st half		75	30-Mar-09	15-Jul-09	11
A7360	Establish Traffic Management & Temp. Fencing	2	30-Mar-09	31-Mar-09	58
A7380	Excavate box	3	01-Apr-09	03-Apr-09	58
A7390	Excavate, lay and concrete ducts	4	06-Apr-09	09-Apr-09	58
A7400	Excavate and construct OLE bases	4	06-Apr-09	09-Apr-09	58
A7420	Set Track (145m)	6	30-Jun-09	07-Jul-09	4
A7430	Place upper concrete and cure	6	03-Jul-09	10-Jul-09	11
A7440	Street Surface finishes	3	13-Jul-09	15-Jul-09	11
2nd half		51	16-Jul-09	25-Sep-09	24
A7450	Excavate box	3	16-Jul-09	20-Jul-09	11
A7460	Excavate, lay and concrete ducts	4	21-Jul-09	24-Jul-09	11
A7490	Set Track	6	09-Sep-09	16-Sep-09	4
A7500	Place upper concrete and cure	6	14-Sep-09	21-Sep-09	24
A7510	Street Surface finishes	3	22-Sep-09	24-Sep-09	24
A7515	Remove fencing and Traffic Management	1	25-Sep-09	25-Sep-09	24
Phase 2		52	26-Oct-09	20-Jan-10	67
1st half		19	26-Oct-09	19-Nov-09	5
A7520	Establish Traffic Management & Temp. Fencing	2	26-Oct-09	27-Oct-09	4
A7540	Excavate box	1	28-Oct-09	28-Oct-09	4
A7550	Excavate, lay and concrete ducts	2	29-Oct-09	30-Oct-09	4
A7560	Excavate and construct OLE bases	2	29-Oct-09	30-Oct-09	4
A7580	Set Track (40m)	4	06-Nov-09	11-Nov-09	0
A7590	Place upper concrete and cure	4	11-Nov-09	16-Nov-09	5
A7600	Street Surface finishes	3	17-Nov-09	19-Nov-09	5
2nd half		33	20-Nov-09	20-Jan-10	67
A7610	Excavate box	1	20-Nov-09	20-Nov-09	5
A7620	Excavate, lay and concrete ducts	2	23-Nov-09	24-Nov-09	5
A7650	Set Track	4	06-Jan-10	11-Jan-10	0
A7660	Place upper concrete and cure	4	11-Jan-10	14-Jan-10	67
A7670	Street Surface finishes	3	15-Jan-10	19-Jan-10	67
A7675	Remove fencing and Traffic Management	1	20-Jan-10	20-Jan-10	67
West Mailtland Ch 940-850		33	02-Feb-10	18-Mar-10	26
Phases 2 & 3		33	02-Feb-10	18-Mar-10	26
1st half		17	02-Feb-10	24-Feb-10	4
A7940	Establish Traffic Management & Temp. Fencing	2	02-Feb-10	03-Feb-10	4
A7960	Excavate box	2	04-Feb-10	05-Feb-10	4
A7970	Excavate, lay and concrete ducts	3	08-Feb-10	10-Feb-10	4

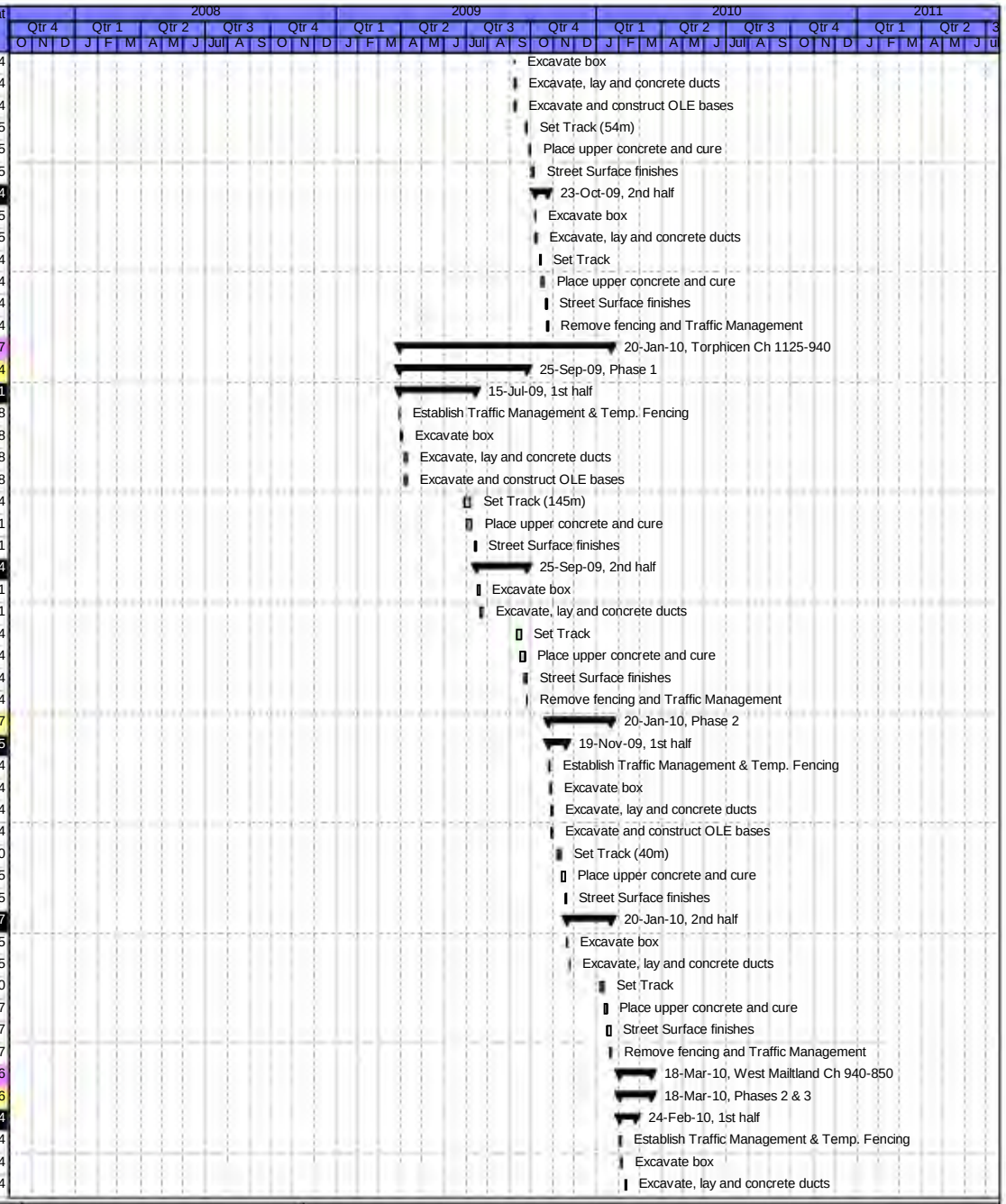

Date	Revision	Checked	Approved
29-Apr-08	Contract Programme 29 April 2008	SCS	

Activity ID	Activity Name	Original Duration	Start	Finish	Total Float
A7980	Excavate and construct OLE bases	3	08-Feb-10	10-Feb-10	4
A8000	Set Track (90m)	4	11-Feb-10	16-Feb-10	4
A8010	Place upper concrete and cure	4	16-Feb-10	19-Feb-10	4
A8020	Street Surface finishes	3	22-Feb-10	24-Feb-10	4
2nd half		16	25-Feb-10	18-Mar-10	26
A8030	Excavate box	2	25-Feb-10	26-Feb-10	4
A8040	Excavate, lay and concrete ducts	3	01-Mar-10	03-Mar-10	4
A8070	Set Track	4	04-Mar-10	09-Mar-10	4
A8080	Place upper concrete and cure	4	09-Mar-10	12-Mar-10	26
A8090	Street Surface finishes	3	15-Mar-10	17-Mar-10	26
A8095	Remove fencing and Traffic Management	1	18-Mar-10	18-Mar-10	26
Shandwick Place Ch 850-440		84	09-Sep-09	19-Jan-10	7
Phase 1		84	09-Sep-09	19-Jan-10	7
A8100	Establish Traffic Management & Temp. Fencing	2	09-Sep-09	10-Sep-09	16
A8110	Excavate box	17	11-Sep-09	05-Oct-09	16
A8120	Excavate, lay and concrete ducts	24	16-Sep-09	19-Oct-09	16
A8130	Excavate and construct OLE bases	24	16-Sep-09	19-Oct-09	16
A8150	Set Track (410m)	31	15-Oct-09	26-Nov-09	7
A8160	Place Upper Concrete and Cure	31	20-Oct-09	05-Jan-10	16
A8170	Street Surface finishes	16	23-Nov-09	18-Jan-10	7
A8175	Remove fencing and Traffic Management	1	19-Jan-10	19-Jan-10	7
SECTION 2 HAYMARKET CORRIDOR		435	31-Mar-08	11-Jan-10	377
Opening Sequence A (Airport to Haymarket)		435	31-Mar-08	11-Jan-10	377
02A Haymarket Corridor		435	31-Mar-08	11-Jan-10	377
E & M Installations		62	24-Jul-09	21-Oct-09	423
A4043	Access for visual inspection for E&M wayside installa	0	24-Jul-09		485
A4044	Access for E&M wayside installation (02A)	0	26-Aug-09		464
A4045	Installation of poles and building fixings	7	26-Aug-09	03-Sep-09	8
A4050	Overhead Catenary Line	16	04-Sep-09	25-Sep-09	8
A4058	Access visual inspection to cable pits for cable laying	0	19-Aug-09		468
A4059	Access to cable pits for cable laying (02A)	0	18-Sep-09		447
A4060	Install Electrical Cables	12	18-Sep-09	05-Oct-09	254
A4070	Install Fibre Optic Cables	12	18-Sep-09	05-Oct-09	271
A4080	Install Signalling Wayside Equipment	12	06-Oct-09	21-Oct-09	254
Haymarket (inc.) to Roseburn Junction (inc.)		435	31-Mar-08	11-Jan-10	377
Haymarket Station Viaduct (S19)		176	31-Mar-08	08-Dec-08	556
10330	Issue Construction Drawings	0		08-Apr-08*	0
10331	Notice to Vacate Caledonian Ale House	0		31-Mar-08*	0
1138	Demolish Caledonian Ale House	20	01-Apr-08	28-Apr-08	105
1139	Bankseat at Grid line 1	40	08-May-(	03-Jul-08	99
192	Pier 2	30	15-May-(	26-Jun-08	99
227	Pier 3	30	30-May-(	10-Jul-08	99
498	Pier 4	30	13-Jun-08	24-Jul-08	99
508	Pier 5	30	27-Jun-08	08-Aug-08	99
560	Bankseat at Gridline 6	40	11-Jul-08	05-Sep-08	99
570	Superstructure	95	04-Jul-08	14-Nov-08	99
580	Finishes	15	17-Nov-08	08-Dec-08	556
Trackwork (1135m)		278	29-May-(	14-Jul-09	329
10340	Issue Construction Drawings	0		29-May-08*	0
10350	Delay start for latest SDS design programme	0		21-Jul-08*	0
1099	Bulk Excavation - Sub Base	18	22-Jul-08	15-Aug-08	2

Date	Revision	Checked	Approved
29-Apr-08	Contract Programme 29 April 2008	SCS	

Activity ID	Activity Name	Original Duration	Start	Finish	Total Float
1109	OLE Foundations - Drainage	23	18-Aug-08	17-Sep-08	2
1119	CBM- Ducts	23	18-Sep-08	20-Oct-08	2
1129	Track Laying 1	19	21-Oct-08	14-Nov-08	2
1169	Track Laying 2	10	24-Feb-09	09-Mar-09	4
1279	Track Laying 3	14	27-Mar-09	16-Apr-09	3
263	Track Finishes	38	17-Apr-09	11-Jun-09	8
550	Fencing	23	12-Jun-09	14-Jul-09	329
Haymarket Terrace Substation		274	17-Nov-08	11-Jan-10	377
326	Order REC supply from Scottish Power	0	17-Nov-08		556
336	Civil Engineering and Building Works	65	09-Dec-08	23-Mar-09	556
A2698	Access for visual inspection for E&M Substation inst	0	20-Feb-09		625
A2699	Access for E&M Substation installation (02A Haymar	0	24-Mar-09		589
A5630	Power Infeed from Public Net available inc HV cable	0	24-Mar-09		556
A5640	Install LV Power Supply and LV Power Equipment	15	12-Oct-09	02-Nov-09	416
A5650	Installation of TPS Equipment	30	26-Oct-09	08-Dec-09	213
A5660	Install Telecom and Scada	15	16-Nov-09	08-Dec-09	213
A5670	Testing and Commissioning	14	08-Dec-09	11-Jan-10	213
Haymarket Station Tram Stop		395	08-Apr-08	09-Nov-09	411
12350	Issue Construction Drawings	0		08-Apr-08*	0
135	Civil Engineering and Building Works	65	17-Nov-08	02-Mar-09	382
488	Order REC Supply	0	26-Jun-09		506
A2480	Deliver and Install Shelter	10	10-Aug-09	24-Aug-09	247
A4678	Access for visual inspection for E&M Tram Stop inst	0	23-Jul-09		516
A4679	Access for E&M Tram Stop installation (02A Hayma	0	24-Aug-09		262
A4680	Install LV Power Supply and LV Power Equipment	25	24-Aug-09	28-Sep-09	247
A4690	Install Telecon Equipment	20	28-Sep-09	26-Oct-09	257
A4700	Install Station Control Equipment + AFC Equipment	25	28-Sep-09	02-Nov-09	247
A4710	Package Test Tramstop	5	02-Nov-09	09-Nov-09	247
A6170	Installation of SIG-interlocking cubicle	15	07-Sep-09	28-Sep-09	287
A6180	Commissioning of SIG -interlocking cubicle	5	22-Oct-09	28-Oct-09	269
SECTION 05 ROSEBURN JUNCTION TO GOGAR		651	26-Mar-08	09-Nov-10	164
Opening Sequence A (Airport to Haymarket)		651	26-Mar-08	09-Nov-10	164
05A Roseburn Junction (exc.) to Balgreen Road (inc.)		644	04-Apr-08	09-Nov-10	164
E & M Installations		82	15-Jul-10	09-Nov-10	164
A4083	Access for visual inspection for E&M wayside installa	0	15-Jul-10		246
A4084	Access for E&M wayside installation (05A)	0	17-Aug-10		225
A4085	Installation of poles and building fixings	18	17-Aug-10	09-Sep-10	0
A4090	Overhead Catenary Line	43	10-Sep-10	09-Nov-10	0
A4098	Access for visual inspection to cable pits for cable la	0	25-Aug-10		218
A4099	Access to cable pits for cable laying (05A)	0	24-Sep-10		197
A4100	Install Electrical Cables	12	24-Sep-10	11-Oct-10	4
A4110	Install Fibre Optic Cables	12	24-Sep-10	11-Oct-10	21
A4120	Install Signalling Wayside Equipment	12	12-Oct-10	27-Oct-10	4
Roseburn Junction (exc.) to Murrayfield Stadium (inc.)		638	08-Apr-08	03-Nov-10	168
Russel Road Underbridge (S20)		205	08-Apr-08	09-Feb-09	199
10270	Issue Construction Drawings	0		08-Apr-08*	0
103	Excavation and piling	60	08-May-(	31-Jul-08	76
238	Bases	30	01-Aug-08	12-Sep-08	76
429	Abutments and Wing Walls	45	01-Sep-08	31-Oct-08	76
439	Deck	50	27-Oct-08	19-Jan-09	76
449	Bridge Finishes	60	03-Nov-08	09-Feb-09	199

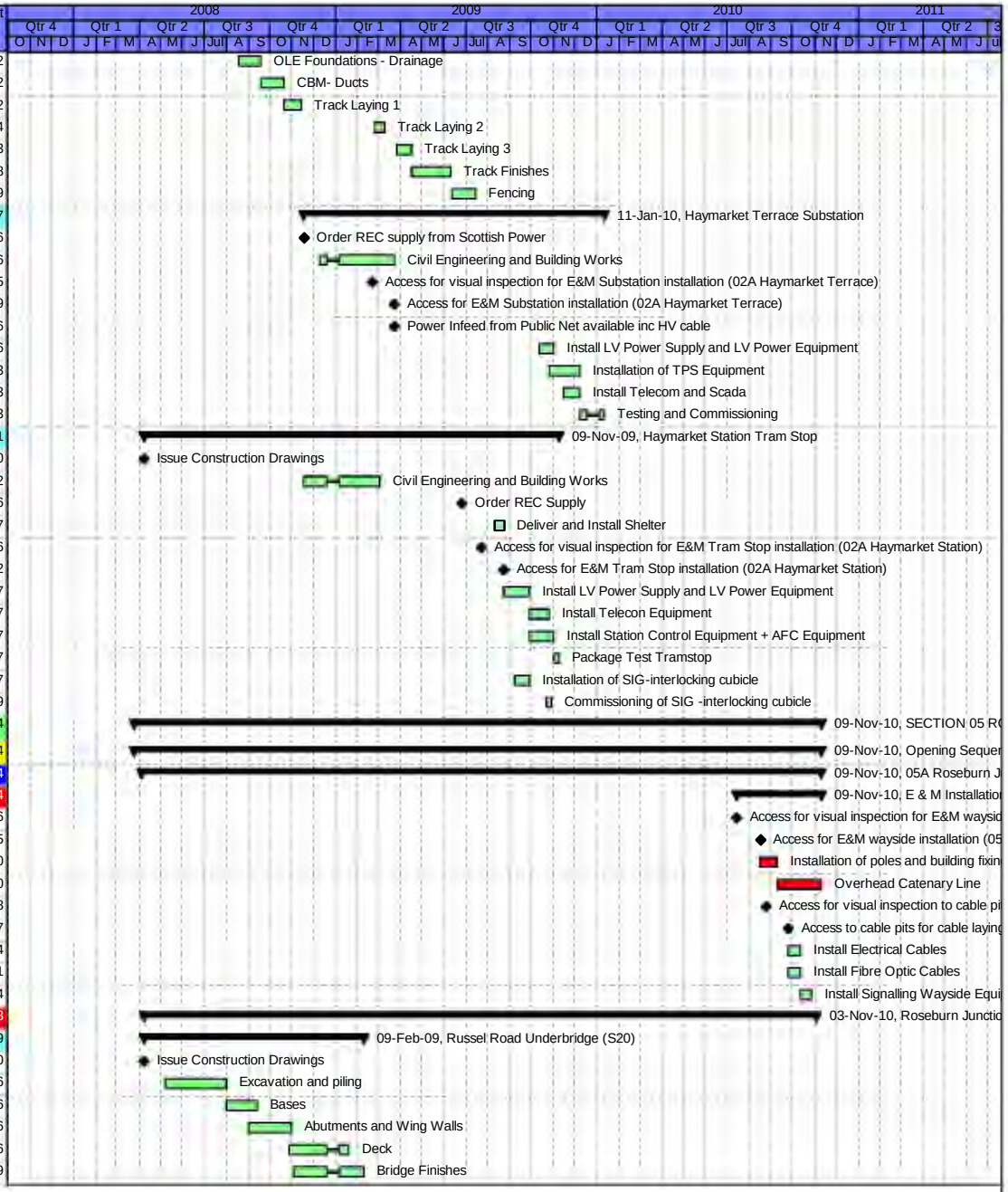

Date	Revision	Checked	Approved
29-Apr-08	Contract Programme 29 April 2008	SCS	

Activity ID	Activity Name	Original Duration	Start	Finish	Total Float
Russell Road Retaining Walls (W3 and W4)		325	15-Apr-08	07-Aug-09	312
10660	Issue Construction Drawings	0		15-Apr-08*	0
107	Site Clearance	20	15-May-(	12-Jun-08	134
250	Demolish Existing Buildings	50	13-Jun-08	22-Aug-08	134
338	Temporary Access Road	15	18-Aug-08	05-Sep-08	145
348	Bored Piling	15	08-Sep-08	26-Sep-08	134
370	Pile Caps	30	17-Nov-08	12-Jan-09	99
659	Retaining Wall	45	13-Jan-09	16-Mar-09	99
669	Waterproofing	20	17-Mar-09	14-Apr-09	99
679	Imported Fill	55	31-Mar-09	18-Jun-09	99
689	Parapet	25	29-May-(	02-Jul-09	99
699	Road Reinstate	25	03-Jul-09	07-Aug-09	312
Murrayfield Tram Stop Retaining Wall (W18)		265	28-Apr-08	27-May-09	247
10740	Issue Construction Drawings	0		28-Apr-08*	0
108	Site Clearance	20	29-May-(	25-Jun-08	92
182	Foundations	15	26-Jun-08	16-Jul-08	92
217	Reinforced Earth Wall	130	10-Jul-08	23-Jan-09	92
418	Coping	15	26-Jan-09	13-Feb-09	195
428	Handrail	10	16-Feb-09	27-Feb-09	247
440	Steps	85	26-Jan-09	27-May-09	247
Trackwork (470m)		396	03-Jul-08	16-Feb-10	186
10180	Issue Construction Drawings	0		03-Jul-08*	0
1029	Bulk Excavation - Sub Base	10	03-Jul-09	16-Jul-09	99
1039	OLE Foundations - Drainage	19	17-Jul-09	13-Aug-09	99
1049	CBM- Ducts	10	14-Aug-09	27-Aug-09	99
1059	Track Laying	17	04-Dec-09	11-Jan-10	30
253	Track Finishes	16	12-Jan-10	02-Feb-10	170
540	Fencing	10	03-Feb-10	16-Feb-10	186
Murrayfield Stadium Tram Stop		622	30-Apr-08	03-Nov-10	168
10460	Issue Construction Drawings	0		30-Apr-08*	0
105	Civil Engineering and Building Works	65	15-Dec-09	29-Mar-10	72
228	Order REC Supply	0	16-Mar-10		331
A2030	Deliver and Install Shelter	10	28-Apr-10	12-May-10	72
A5078	Access for visual inspection for E&M Tram Stop inst	0	13-Apr-10		328
A5079	Access for E&M Tram Stop installation (05A Murray	0	13-May-:		74
A5080	Install LV Power Supply and LV Power Equipment	25	13-May-:	17-Jun-10	72
A5090	Install Telecon Equipment	20	18-Jun-10	15-Jul-10	82
A5100	Install Station Control Equipment + AFC Equipment	25	18-Jun-10	22-Jul-10	72
A5110	Package Test Tramstop	5	23-Jul-10	29-Jul-10	72
A6270	Installation of SIG-interlocking cubicle	15	27-May-:	16-Jun-10	99
A6280	Commissioning of SIG -interlocking cubicle	5	28-Oct-10	03-Nov-10	4
Murrayfield Stadium (exc.) to Balgreen Road (inc.)		625	04-Apr-08	13-Oct-10	183
Roseburn Street Viaduct (S21A)		467	27-May-(	20-Apr-10	36
10750	Issue Construction Drawings	0		27-May-08*	0
10751	Remove Scotrail Oil Tanks	0		29-Aug-08*	0
109	Bankseat at Grid line A	25	20-Jan-09	21-Apr-09	36
172	Pier B	45	20-Jan-09	20-May-09	36
207	Pier C	45	31-Mar-09	04-Jun-09	36
398	Pier D	45	15-Apr-09	18-Jun-09	36
408	Pier E	45	29-Apr-09	02-Jul-09	36
420	Bankseat at Gridline F	25	29-May-(	02-Jul-09	36
430	Structural steelwok	30	12-Jun-09	23-Jul-09	36

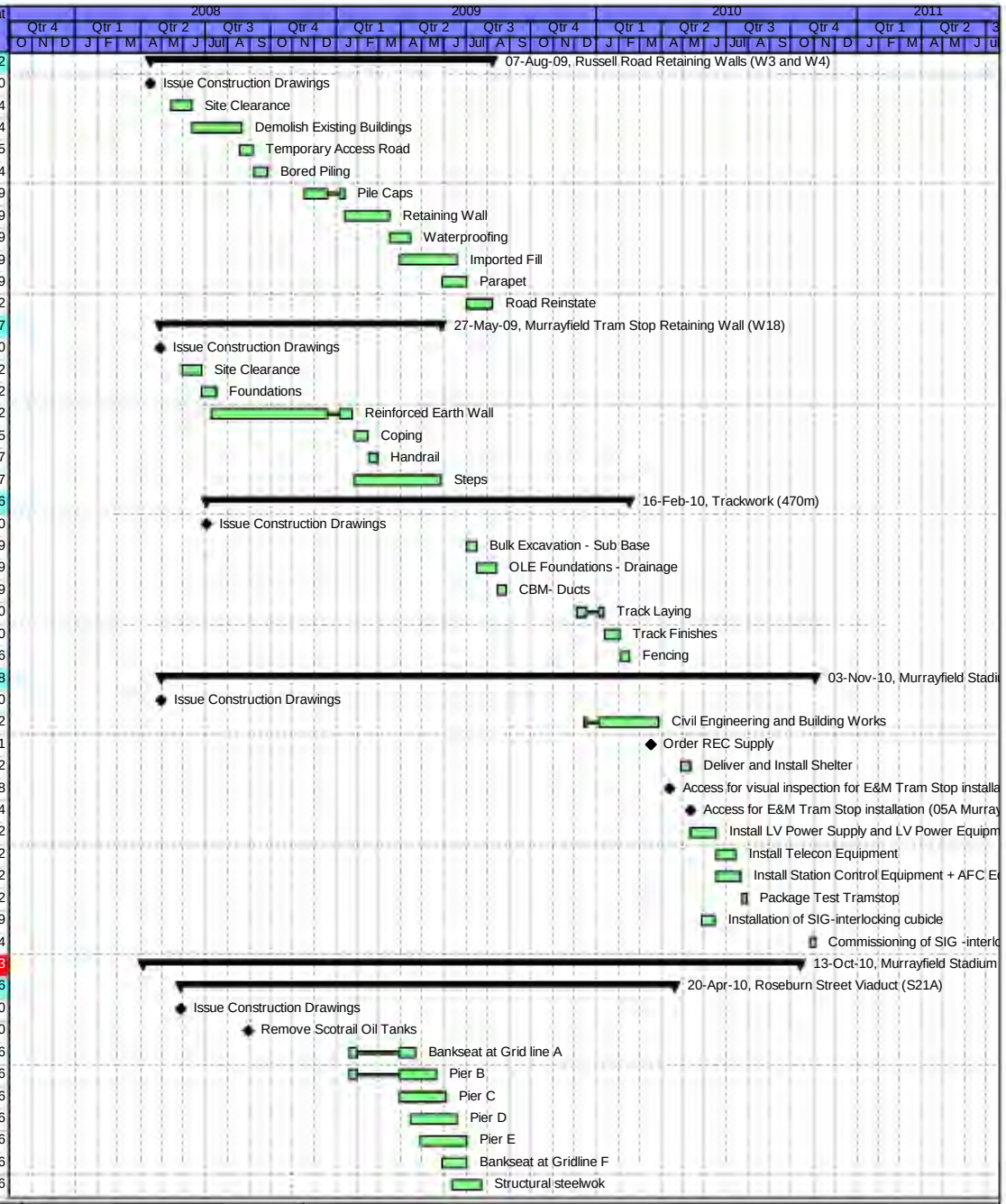

Date	Revision	Checked	Approved
29-Apr-08	Contract Programme 29 April 2008	SCS	

Activity ID	Activity Name	Original Duration	Start	Finish	Total Float
729	Deck Concrete	65	24-Jul-09	23-Oct-09	36
739	Finishes	75	26-Oct-09	20-Apr-10	36
Murrayfield Retaining Walls (S21B)		170	27-May-(	05-Feb-09	439
10700	Issue Construction Drawings	0		27-May-08*	0
10760	Murrayfield Stadium Accomodation Works	60	02-Jun-0	25-Aug-08	546
110	Site Clearance	20	25-Jun-0	22-Jul-08	88
197	Demolition	10	09-Jul-08	22-Jul-08	88
378	Foundations	15	23-Jul-08	13-Aug-08	88
388	Reinforced Earth Wall	95	07-Aug-08	18-Dec-08	88
400	Coping	15	19-Dec-08	22-Jan-09	323
410	Handrail	10	23-Jan-09	05-Feb-09	323
Murrayfield Stadium Underpass (S21C)		130	08-May-(	10-Nov-08	375
10720	Issue Construction Drawings	0		08-May-08*	0
112	Site Clearance	10	09-Jun-08	20-Jun-08	139
187	Temporary Works - Demolition	20	23-Jun-08	18-Jul-08	139
358	Earthworks	10	21-Jul-08	01-Aug-08	139
368	Base	10	05-Aug-08	18-Aug-08	139
380	Walls	20	19-Aug-08	15-Sep-08	139
390	Roof	20	16-Sep-08	13-Oct-08	139
709	Parapet Walls	15	07-Oct-08	27-Oct-08	139
719	Finishes	10	28-Oct-08	10-Nov-08	375
Murrayfield Retaining Walls (S21D)		292	07-Apr-08	12-Jun-09	235
10729	SDS Design Complete	0		07-Apr-08*	0
10730	Issue Construction Drawings	0		16-Jul-08*	0
111	Site Clearance	10	28-Oct-08	10-Nov-08	139
438	Foundations	15	11-Nov-08	02-Dec-08	139
448	Reinforced Earth Wall	65	25-Nov-08	07-May-09	99
450	Coping	15	08-May-(	29-May-09	235
460	Handrail	10	01-Jun-09	12-Jun-09	235
Water of Leith Bridge (S21E)		406	08-May-(	06-Jan-10	99
10770	Issue Construction Drawings	0		08-May-08*	0
113	Leaf Pier	84	08-May-(	04-Sep-09	99
639	End Supports	18	07-Sep-09	30-Sep-09	99
649	Superstructure	59	01-Oct-09	06-Jan-10	99
Baird Drive Retaining Walls (W8)		186	04-Apr-08	09-Jan-09	127
10689	SDS Design Complete	0		04-Apr-08*	0
10690	Issue Construction Drawings	0		23-Jul-08*	0
114	Site Clearance	10	22-Aug-08	04-Sep-08	127
458	Foundations	15	05-Sep-08	25-Sep-08	127
468	Reinforced Earth Wall	45	19-Sep-08	20-Nov-08	127
470	Coping	15	21-Nov-08	12-Dec-08	127
480	Handrail	10	15-Dec-08	09-Jan-09	127
Balgreen Road Bridge (S22) and Retaining Walls (W9)		371	03-Jul-08	12-Jan-10	95
10709	SDS Design Complete	0		03-Jul-08*	0
10710	Issue Construction Drawings	0		10-Oct-08*	0
115	New Structure (Preliminary Details Only) (dummy)	215	25-Feb-09	12-Jan-10	95
Trackwork (1006m)		563	03-Jul-08	13-Oct-10	19
10080	Issue Construction Drawings	0		03-Jul-08*	0
1009	Bulk Excavation - Sub Base	18	07-Apr-10	30-Apr-10	36
1019	OLE Foundations - Drainage	20	04-May-:	01-Jun-10	36
243	CBM - Ducts	20	02-Jun-10	29-Jun-10	36
530	Tracklaying	27	04-Aug-10	09-Sep-10	12

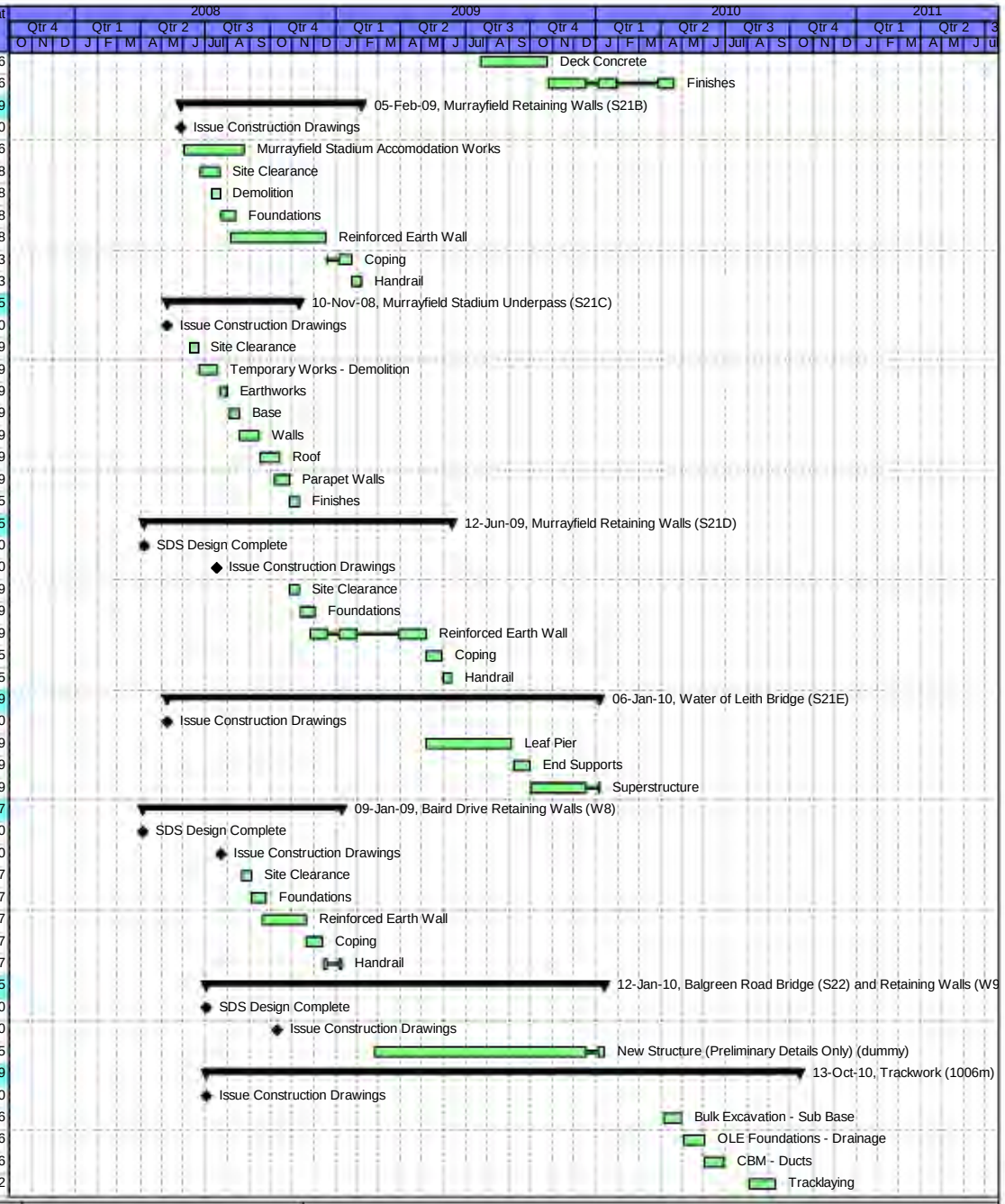

Date	Revision	Checked	Approved
29-Apr-08	Contract Programme 29 April 2008	SCS	

Activity ID	Activity Name	Original Duration	Start	Finish	Total Float
989	Track Finishes	5	10-Sep-10	16-Sep-10	12
999	Fencing	19	17-Sep-10	13-Oct-10	19
Balgreen Road Tram Stop		315	26-Jun-08	05-Oct-09	436
10790	Issue Construction Drawings	0		26-Jun-08*	0
117	Civil Engineering and Builders Work	65	16-Feb-09	19-May-09	328
328	Order REC Supply	0	21-May-(		531
A2300	Deliver and Install Shelter	10	03-Jul-09	17-Jul-09	272
A5118	Access for visual inspection for E&M Tram Stop inst	0	17-Jun-09		543
A5119	Access for E&M Tram Stop installation (05A Balgree	0	17-Jul-09		309
A5120	Install LV Power Supply and LV Power Equipment	25	17-Jul-09	24-Aug-09	272
A5130	Install Telecon Equipment	20	24-Aug-09	21-Sep-09	282
A5140	Install Station Control Equipment + AFC Equipment	25	24-Aug-09	28-Sep-09	272
A5150	Package Test Tramstop	5	28-Sep-09	05-Oct-09	272
Jenners Depository Sub Station		355	26-Jan-09	01-Jul-10	257
286	Order REC supply from Scottish Power	0	26-Jan-09		353
296	Civil Engineering and Building Works	65	16-Feb-09	19-May-09	353
A2278	Access for visual inspection for E&M Substation insta	0	20-Apr-09		584
A2279	Access for E&M Substation installation (05A Jenners	0	20-May-(		370
A5830	Power Infeed from Public Net available inc HV cable	0	20-May-(		353
A5840	Install LV Power Supply and LV Power Equipment	15	14-Apr-10	06-May-10	132
A5850	Installation of TPS Equipment	30	28-Apr-10	11-Jun-10	93
A5860	Install Telecom and Scada	15	20-May-:	11-Jun-10	93
A5870	Testing and Commissioning	14	11-Jun-10	01-Jul-10	93
05B Balgreen Road (exc.) to Edinburgh Park Central (inc.)		529	26-Mar-08	20-May-10	286
E & M Installations		147	27-Aug-09	07-Apr-10	315
A4123	Access for visual inspection for E&M wayside installa	0	27-Aug-09		462
A4124	Access for E&M wayside installation (05B)	0	28-Sep-09		441
A4125	Installation of poles and building fixings	36	28-Sep-09	16-Nov-09	8
A4130	Overhead Catenary Line	87	17-Nov-09	01-Apr-10	8
A4138	Access for visual inspection to cable pits for cable la	0	30-Oct-09		416
A4139	Access to cable pits for cable laying (05B)	0	02-Dec-09		395
A4140	Install Electrical Cables	40	02-Dec-09	09-Feb-10	146
A4150	Install Fibre Optic Cables	40	02-Dec-09	09-Feb-10	191
A4160	Install Signalling Wayside Equipment	40	10-Feb-10	07-Apr-10	146
Balgreen Road (exc.) to Saughton Road North (inc.)		529	26-Mar-08	20-May-10	286
Carricknowe Bridge (S23)		276	27-Mar-08	11-May-09	538
10809	SDS Design Complete	0		27-Mar-08*	0
10810	Issue Construction Drawings	0		22-Jul-08*	0
Carrick Knowe disruptive possessions		175	21-Aug-08	11-May-09	538
Establishment		174	21-Aug-08	09-May-09	539
12	Temporary Fencing	5	21-Aug-08	27-Aug-08	17
13	Haul Roads	5	21-Aug-08	27-Aug-08	17
24	Possessions 1 (12hrs)	0	28-Aug-08		17
A15	Possessions 2 (12hrs)	0	29-Aug-08		733
B14	Erect Network Rail Safety Barrier	2	28-Aug-08	29-Aug-08	557
C13	Possessions 4 (12hrs)	0		09-May-09	793
C14	Remove Crash Deck and Barriers	1	23-Apr-09	23-Apr-09	561
North Abutment		103	28-Aug-08	03-Feb-09	14
Excavate and Blind		10	28-Aug-08	10-Sep-08	18
106	Excavate	4	04-Sep-08	09-Sep-08	18
16	Blinding	1	10-Sep-08	10-Sep-08	18
96	Temporary Support to Railway Lines	5	28-Aug-08	03-Sep-08	18

Date	Revision	Checked	Approved
29-Apr-08	Contract Programme 29 April 2008	SCS	

Activity ID	Activity Name	Original Duration	Start	Finish	Total Float
Base Construction		9	11-Sep-08	23-Sep-08	20
37	Steel fixing	8	11-Sep-08	22-Sep-08	18
7	Concrete	1	23-Sep-08	23-Sep-08	20
87	Shuttering	5	16-Sep-08	22-Sep-08	20
Abutment Wall		20	24-Sep-08	21-Oct-08	18
128	Shutter front face	6	13-Oct-08	20-Oct-08	18
28	Concrete	1	21-Oct-08	21-Oct-08	18
38	Shutter rear face	5	24-Sep-08	30-Sep-08	20
58	Steelfixing	8	03-Oct-08	14-Oct-08	18
Ballast Wall		5	28-Jan-09	03-Feb-09	14
A10	Ballast Wall	5	28-Jan-09	03-Feb-09	14
Wing Walls		47	07-Nov-08	27-Jan-09	18
69	Backfill	5	07-Nov-08	13-Nov-08	18
A140	Wing Walls	8	14-Nov-08	25-Nov-08	18
A140	Parapet Beams	5	21-Jan-09	27-Jan-09	18
A140	Backfill	2	26-Nov-08	27-Nov-08	24
A140	Wing Walls	8	09-Dec-08	18-Dec-08	18
South Abutment		103	04-Sep-08	10-Feb-09	14
Excavate and Blind		10	04-Sep-08	17-Sep-08	21
116	Blinding	1	17-Sep-08	17-Sep-08	21
206	Temporary Support to Railway Lines	5	04-Sep-08	10-Sep-08	21
236	Excavate	4	11-Sep-08	16-Sep-08	21
Base Construction		12	23-Sep-08	08-Oct-08	20
177	Steel fixing	8	23-Sep-08	02-Oct-08	18
237	Shuttering	5	01-Oct-08	07-Oct-08	20
97	Concrete	1	08-Oct-08	08-Oct-08	20
Abutment Wall		27	09-Oct-08	14-Nov-08	20
688	Concrete	1	31-Oct-08	31-Oct-08	20
698	Shutter rear face	5	09-Oct-08	15-Oct-08	20
708	Steelfixing	8	15-Oct-08	24-Oct-08	20
718	Shutter front face	6	23-Oct-08	30-Oct-08	20
A140	Strike Shutters and Cure	10	03-Nov-08	14-Nov-08	20
Ballast Wall		5	04-Feb-09	10-Feb-09	14
A140	Ballast Wall	5	04-Feb-09	10-Feb-09	14
Wing Walls		36	17-Nov-08	20-Jan-09	18
89	Backfill	5	17-Nov-08	21-Nov-08	20
A1012	Backfill	2	09-Dec-08	10-Dec-08	24
A1015	Wing Walls	8	19-Dec-08	13-Jan-09	18
A141	Wing Walls	8	26-Nov-08	08-Dec-08	18
A141	Parapet Beams	5	14-Jan-09	20-Jan-09	18
Superstructure		95	03-Nov-08	30-Mar-09	140
Reinforced Concrete Deck		26	06-Jan-09	10-Feb-09	4
104	Permanent Formwork	13	06-Jan-09	22-Jan-09	4
246	Deck Shuttering	25	06-Jan-09	09-Feb-09	4
247	Concrete Deck	1	27-Jan-09	27-Jan-09	14
257	Concrete Parapet Beam	1	10-Feb-09	10-Feb-09	4
27	Concrete Diaphragms	1	20-Jan-09	20-Jan-09	18
285	Deck Reinforcement	11	23-Jan-09	06-Feb-09	5
Deck Finishes		34	11-Feb-09	30-Mar-09	140
59	Expansion Joints	1	25-Feb-09	25-Feb-09	4
70	Parapet Rails	5	26-Feb-09	04-Mar-09	4
728	Waterproofing (inc. deck curing)	10	11-Feb-09	24-Feb-09	4

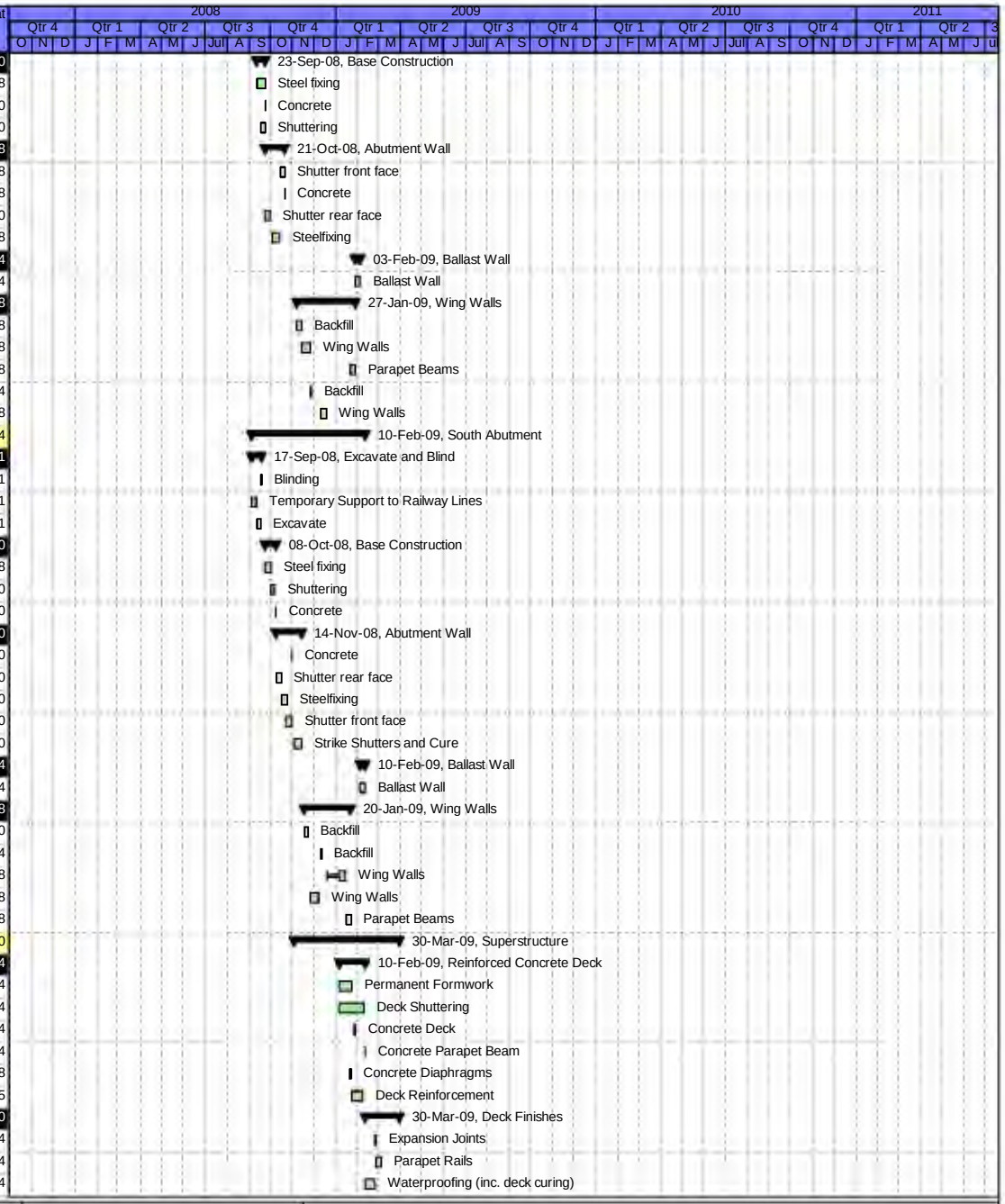

Date	Revision	Checked	Approved
29-Apr-08	Contract Programme 29 April 2008	SCS	

Activity ID	Activity Name	Original Duration	Start	Finish	Total Float
80	Walkway Constructon	10	17-Mar-09	30-Mar-09	141
Pre cast Concrete Beams		35	03-Nov-08	05-Jan-09	4
193	Erect Crash Deck	1	05-Jan-09	05-Jan-09	4
32	Bearings	2	03-Nov-08	04-Nov-08	32
63	Possession 3 (16hrs)	0		02-Jan-09*	0
93	Place Beams	1	02-Jan-09	03-Jan-09	7
Run On Run Off Slabs		12	28-Jan-09	12-Feb-09	18
275	Backfill and cast slab north	8	03-Feb-09	12-Feb-09	18
34	Backfill and cast slab south	8	28-Jan-09	06-Feb-09	18
Tracklaying		18	05-Mar-09	30-Mar-09	2
44	Containment Slabs	8	05-Mar-09	16-Mar-09	4
45	Fix Rails	8	19-Mar-09	30-Mar-09	2
M & E Works		28	31-Mar-09	11-May-09	113
265	OLE Supports and Catenary over Tracks	1	11-May-(	11-May-09	113
64	OLE Supports	8	31-Mar-09	09-Apr-09	11
75	Catenary Cables	8	13-Apr-09	22-Apr-09	11
94	Possessions 4 (12hrs)	0		09-May-09*	0
Trackwork (1690m)		192	26-Jun-08	08-Apr-09	395
12830	Issue Construction Drawings	0		26-Jun-08*	0
Ballasted Track 1160m		151	26-Aug-08	08-Apr-09	395
1533	Earthworks - Subbase	20	26-Aug-08	22-Sep-08	28
1534	OLE Foundations - Drainage	23	23-Sep-08	23-Oct-08	28
1609	Bottom Ballast - Ducts	23	24-Oct-08	25-Nov-08	28
1619	Track laying	21	16-Jan-09	13-Feb-09	2
1629	Top Ballast	15	16-Feb-09	06-Mar-09	157
1639	Fencing & Trackside Finishes	23	09-Mar-09	08-Apr-09	395
Concrete Slab Track 590m		127	28-Jul-08	05-Feb-09	439
1543	Earthworks- Subbase	34	28-Jul-08	12-Sep-08	31
1544	OLE Foundations - Drainage - Ducts	24	15-Sep-08	16-Oct-08	31
1659	Track laying	26	02-Dec-08	20-Jan-09	0
1679	Fencing & Finishes	12	21-Jan-09	05-Feb-09	439
Saughton Road North Tram Stop		529	26-Mar-08	20-May-10	286
10840	Issue Construction Drawings	0		26-Mar-08*	0
123	Civil Engineering and Building Works	65	21-Jan-09	22-Apr-09	346
248	Order REC Supply	0	05-Jan-10		381
A2080	Deliver and Install Shelter	10	16-Feb-10	02-Mar-10	122
A5158	Access for visual inspection for E&M Tram Stop inst	0	29-Jan-10		380
A5159	Access for E&M Tram Stop installation (05B Saught	0	02-Mar-10		126
A5160	Install LV Power Supply and LV Power Equipment	25	02-Mar-10	07-Apr-10	122
A5170	Install Telecon Equipment	20	07-Apr-10	06-May-10	132
A5180	Install Station Control Equipment + AFC Equipment	25	07-Apr-10	13-May-10	122
A5190	Package Test Tramstop	5	13-May-:	20-May-10	122
Saughton Road North (exc.) to Bankhead (inc.)		496	12-May-(	19-May-10	287
Bankhead Drive Substation		346	12-Dec-08	19-May-10	287
256	Order REC supply from Scottish Power	0	12-Dec-08		374
266	Civil Engineering and Building Works	65	16-Jan-09	17-Apr-09	374
A2258	Access for visual inspection for E&M Substation insta	0	19-Mar-09		606
A2259	Access for E&M Substation installation (05B Bankhe	0	20-Apr-09		392
A5880	Power Infeed from Public Net available inc HV cable	0	20-Apr-09		374
A5890	Install LV Power Supply and LV Power Equipment	15	02-Mar-10	23-Mar-10	162
A5900	Installation of TPS Equipment	30	16-Mar-10	28-Apr-10	123
A5910	Install Telecom and Scada	15	07-Apr-10	28-Apr-10	123

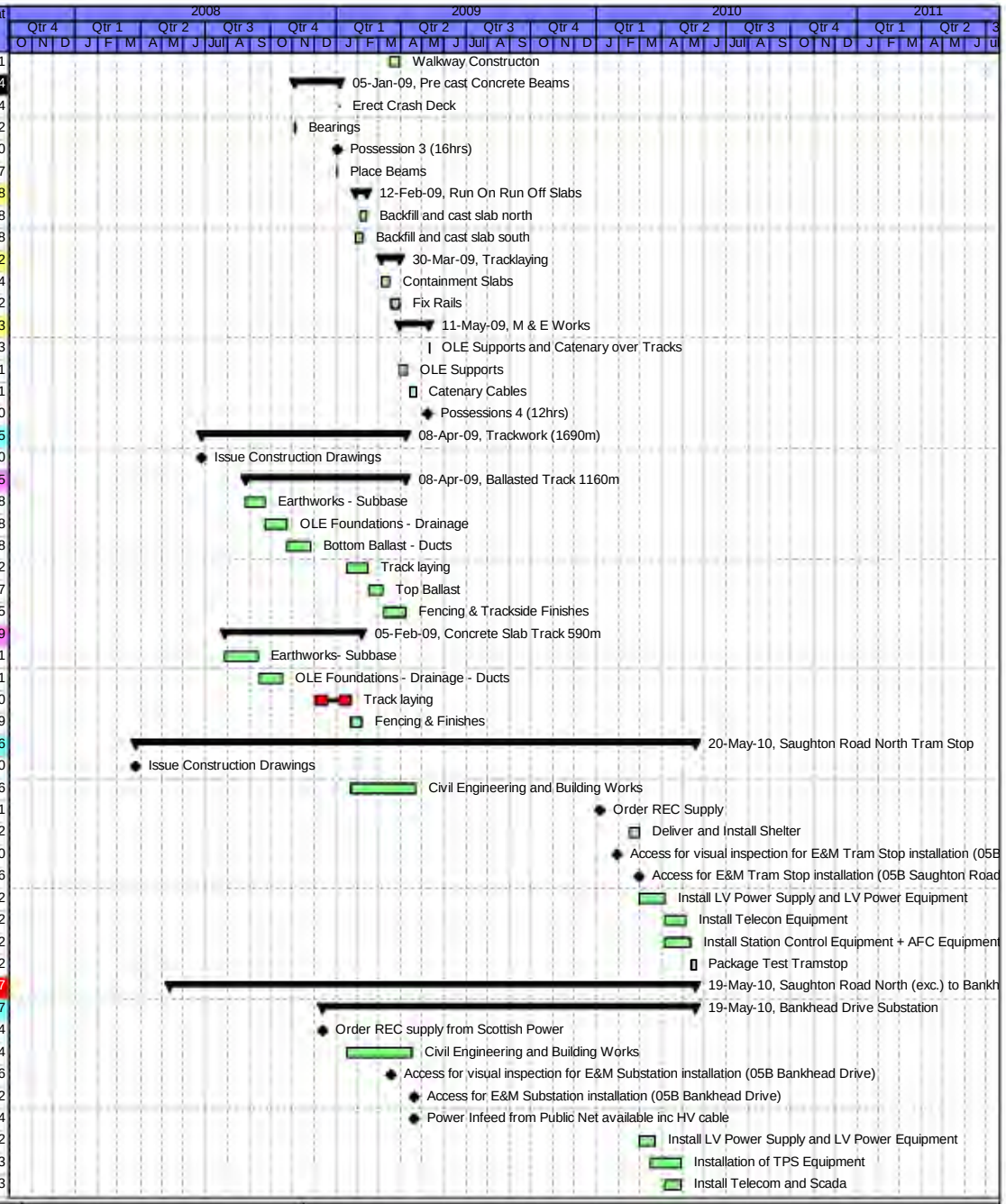

Date	Revision	Checked	Approved
29-Apr-08	Contract Programme 29 April 2008	SCS	

Activity ID	Activity Name	Original Duration	Start	Finish	Total Float
A5920	Testing and Commissioning	14	28-Apr-10	19-May-10	123
Bankhead Retaining Wall (W11)		40	12-May-(	08-Jul-08	67
10860	Issue Construction Drawings	0		12-May-08*	0
127	Retaining Wall Construction	20	11-Jun-08	08-Jul-08	67
Bankhead Tram Stop		390	26-Jun-08	02-Feb-10	361
12870	Issue Construction Drawings	0		26-Jun-08*	0
129	Civil Engineering and Building Works	65	16-Jan-09	17-Apr-09	349
318	Order REC Supply	0	07-Sep-09		456
A2230	Deliver and Install Shelter	10	19-Oct-09	02-Nov-09	197
A5198	Access for visual inspection for E&M Tram Stop inst	0	01-Oct-09		466
A5199	Access for E&M Tram Stop installation (05B South (	0	02-Nov-09		212
A5200	Install LV Power Supply and LV Power Equipment	25	02-Nov-09	08-Dec-09	197
A5210	Install Telecon Equipment	20	08-Dec-09	19-Jan-10	207
A5220	Install Station Control Equipment + AFC Equipment	25	08-Dec-09	26-Jan-10	197
A5230	Package Test Tramstop	5	26-Jan-10	02-Feb-10	197
South Gyle Access Bridge (S26)		158	14-May-(	08-Jan-09	2
12880	Issue Construction Drawings	0		14-May-08*	0
156	Substructure	83	13-Jun-08	08-Oct-08	2
276	Superstructure	55	09-Oct-08	08-Jan-09	2
Trackwork (1260m)		158	26-Jun-08	19-Feb-09	160
12890	Issue Construction Drawings	0		26-Jun-08*	0
13000	Delay Start to Maintain Guided Bus Way	0		03-Nov-08*	7
223	Earthworks and Subbase	8	04-Nov-08	13-Nov-08	7
510	OLE Foundations - Drainage - Ducts	28	14-Nov-08	07-Jan-09	166
919	Track laying	29	21-Nov-08	15-Jan-09	2
939	Fencing & Trackside Finishes	25	16-Jan-09	19-Feb-09	160
Bankhead (exc.) to Edinburgh Park Station (inc.)		441	26-Jun-08	14-Apr-10	310
Trackwork (790m)		129	26-Jun-08	09-Jan-09	458
12900	Issue Construction Drawings	0		26-Jun-08*	0
213	Earthworks and Subbase	15	25-Jul-08	15-Aug-08	3
500	OLE Foundations - Drainage	32	18-Aug-08	30-Sep-08	3
859	Ducts and Bottom Ballast	16	01-Oct-08	22-Oct-08	3
879	Track laying	20	23-Oct-08	19-Nov-08	3
889	Top Ballast	10	20-Nov-08	04-Dec-08	213
899	Fencing and Trackside finishes	16	05-Dec-08	09-Jan-09	458
Edinburgh Park Station Tram Stop		441	26-Jun-08	14-Apr-10	310
12910	Issue Construction Drawings	0		26-Jun-08*	0
132	Civil Engineering and Builderworks	65	20-Nov-08	05-Mar-09	379
278	Order REC Supply	0	10-Mar-09		581
A2140	Deliver and Install Shelter	10	22-Apr-09	07-May-09	322
A5238	Access for visual inspection for E&M Tram Stop inst	0	07-Apr-09		593
A5239	Access for E&M Tram Stop installation (05B Edinbu	0	07-May-(		339
A5240	Install LV Power Supply and LV Power Equipment	25	07-May-(	12-Jun-09	322
A5250	Install Telecon Equipment	20	12-Jun-09	10-Jul-09	332
A5260	Install Station Control Equipment + AFC Equipment	25	12-Jun-09	17-Jul-09	322
A5270	Package Test Tramstop	5	17-Jul-09	24-Jul-09	322
A6290	Installation of SIG-interlocking cubicle	15	21-May-(	11-Jun-09	364
A6300	Commissioning of SIG -interlocking cubicle	5	08-Apr-10	14-Apr-10	149
Edinburgh Park Station (exc.) to Edinburgh Park Central (inc.)		440	26-Jun-08	14-Apr-10	311
Edinburgh Park Central Tram Stop		440	26-Jun-08	14-Apr-10	311
12920	Issue Construction Drawings	0		26-Jun-08*	0
166	Civil Engineering and Building Works	65	09-Sep-09	09-Dec-09	185

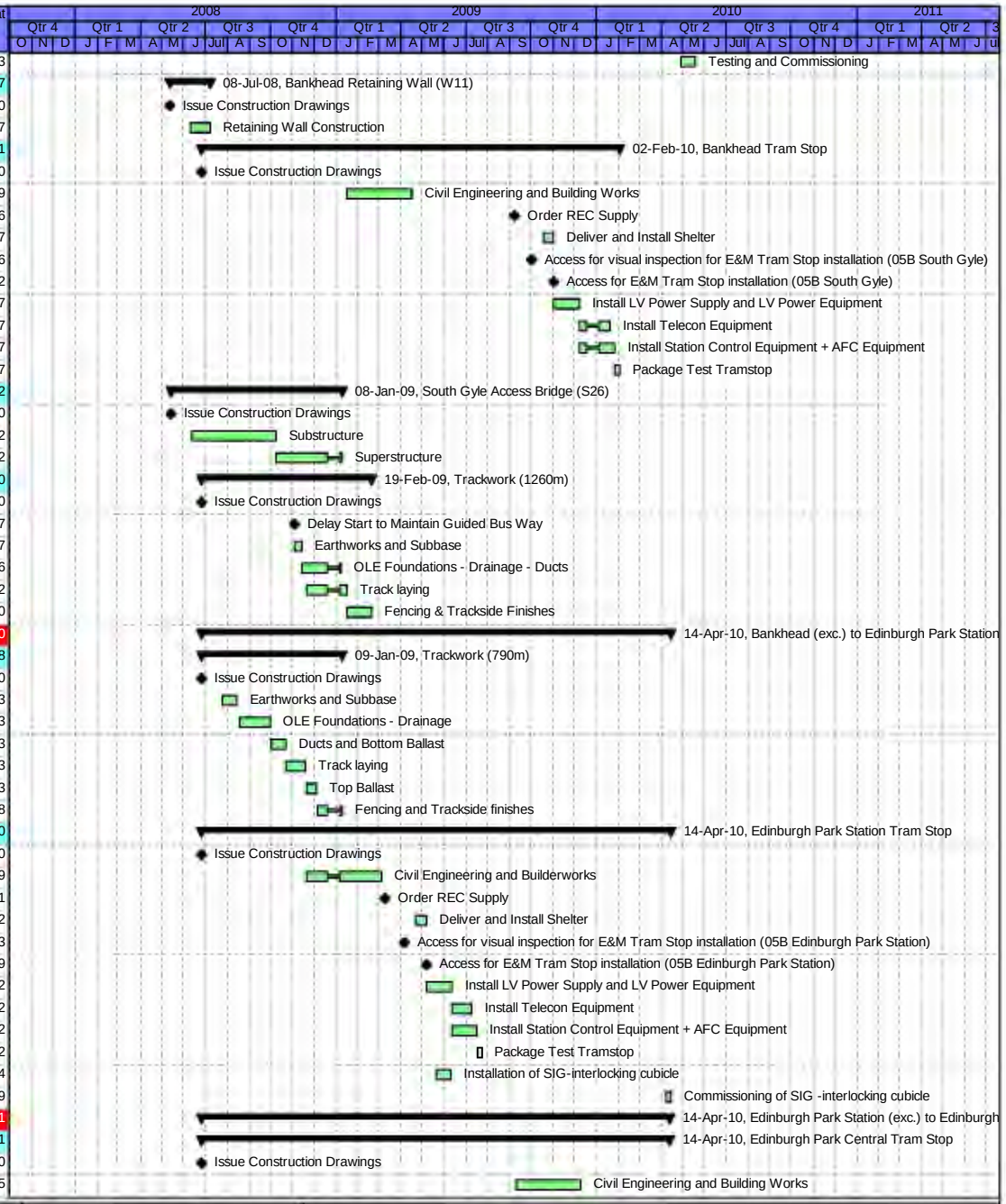

Date	Revision	Checked	Approved
29-Apr-08	Contract Programme 29 April 2008	SCS	

Activity ID	Activity Name	Original Duration	Start	Finish	Total Float
268	Order REC Supply	0	16-Nov-09		406
A2110	Deliver and Install Shelter	10	12-Jan-10	26-Jan-10	147
A5278	Access for visual inspection for E&M Tram Stop inst	0	25-Dec-09		405
A5279	Access for E&M Tram Stop installation (05B Edinbu	0	26-Jan-10		151
A5280	Install LV Power Supply and LV Power Equipment	25	26-Jan-10	02-Mar-10	147
A5290	Install Telecon Equipment	20	02-Mar-10	30-Mar-10	157
A5300	Install Station Control Equipment + AFC Equipment	25	02-Mar-10	07-Apr-10	147
A5310	Package Test Tramstop	5	07-Apr-10	14-Apr-10	147
Trackwork (854m)		322	26-Jun-08	13-Oct-09	265
12930	Issue Construction Drawings	0		26-Jun-08*	0
203	Earthworks- Subbase	11	08-Apr-09	24-Apr-09	20
490	OLE Foundations - Drainage	19	24-Apr-09	22-May-09	20
829	Track Formation - Ducts	16	22-May-(	16-Jun-09	20
839	Track laying	44	08-Jul-09	08-Sep-09	4
849	Track Finishes	15	09-Sep-09	29-Sep-09	14
869	Fencing	10	30-Sep-09	13-Oct-09	265
Edinburgh Park Station Bridge (S27)		215	07-Jul-08	24-May-09	529
12940	Issue Construction Drawings	0		07-Jul-08*	0
Edinburgh Park Station Bridge distruptive possessions		195	05-Aug-08	24-May-09	529
Establishment		195	05-Aug-08	23-May-09	529
184	Possession 1 (12hrs)	0	13-Aug-08		567
363	Haul Roads	5	06-Aug-08	12-Aug-08	552
42	Temporary Fencing	0		05-Aug-08	47
A12	Possession 5 (12hrs)	0		23-May-09	779
A14	Remove Protection Barrier and Crash deck	1	14-May-(	14-May-09	378
A14120	Possession 2 (12hrs)	0	14-Aug-08		744
A14130	Network Rail Protection Barrier	2	13-Aug-08	14-Aug-08	567
North Approach Ramp		64	06-Aug-08	03-Nov-08	496
Abutment		31	06-Aug-08	17-Sep-08	529
Base Construction		6	11-Aug-08	18-Aug-08	125
11	Concrete	1	18-Aug-08	18-Aug-08	125
479	Shuttering	3	13-Aug-08	15-Aug-08	125
758	Steelfixing	4	11-Aug-08	14-Aug-08	123
Wall Construction		20	21-Aug-08	17-Sep-08	529
11	Concrete	1	03-Sep-08	03-Sep-08	138
292	Ballast Wall	5	04-Sep-08	10-Sep-08	160
513	Cladding	5	11-Sep-08	17-Sep-08	529
579	Shuttering	5	27-Aug-08	02-Sep-08	138
768	Steelfixing	4	21-Aug-08	26-Aug-08	123
Excavation		3	06-Aug-08	08-Aug-08	123
267	Blinding	1	08-Aug-08	08-Aug-08	123
426	Excavation	2	06-Aug-08	07-Aug-08	123
Reinforced Earth Wall		27	26-Sep-08	03-Nov-08	123
101	Build Wall units	11	13-Oct-08	27-Oct-08	123
212	Place Coping Units	5	28-Oct-08	03-Nov-08	123
469	Place Fill	11	13-Oct-08	27-Oct-08	123
748	Mass Concrete Footing	2	26-Sep-08	29-Sep-08	132
South Approach Ramp		50	11-Aug-08	17-Oct-08	507
Reinforced Earth Wall		18	24-Sep-08	17-Oct-08	134
459	Place Fill	11	26-Sep-08	10-Oct-08	123
738	Mass Concrete Footing	2	24-Sep-08	25-Sep-08	123
A102	Place Coping Units	5	13-Oct-08	17-Oct-08	134

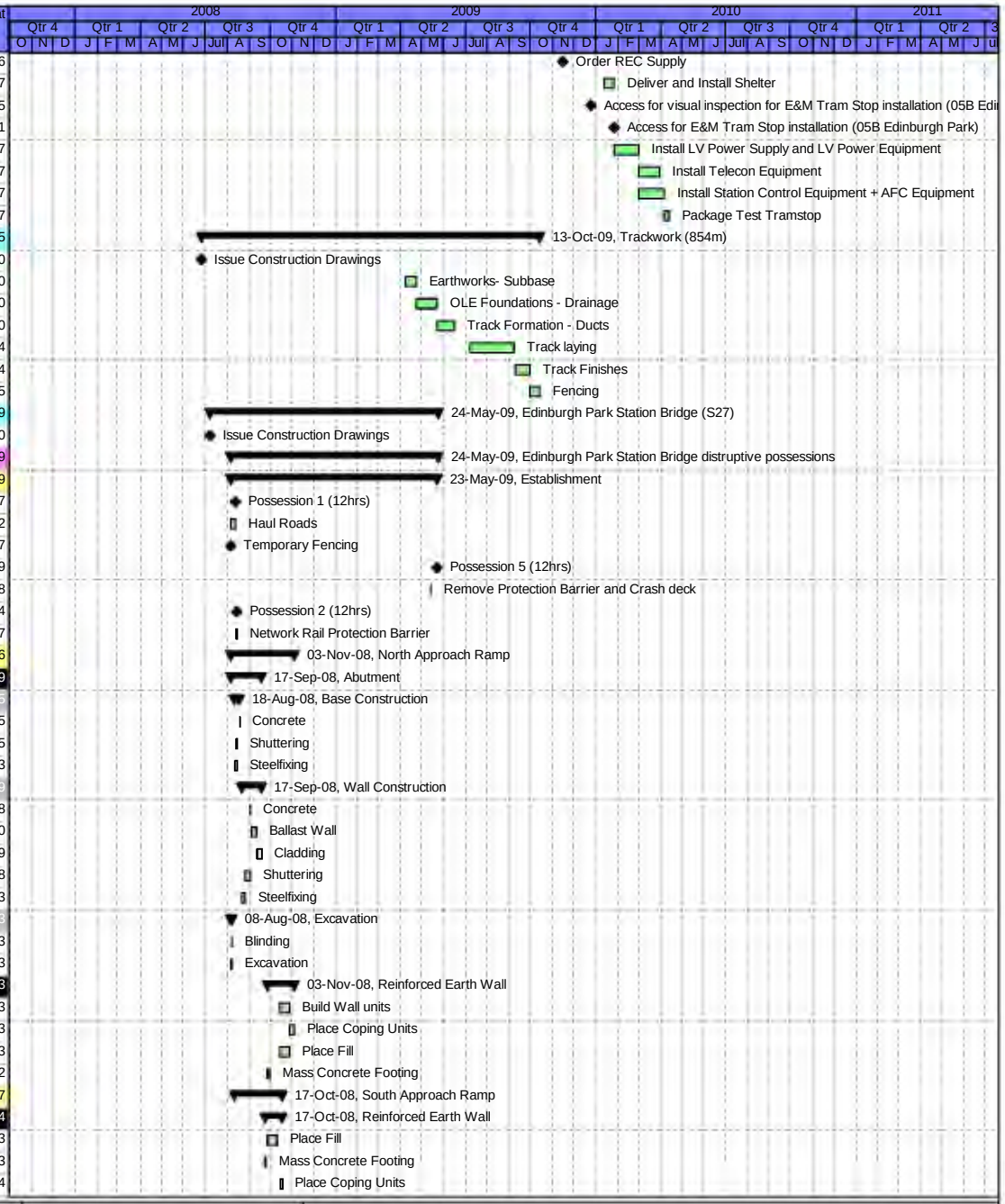

Date	Revision	Checked	Approved
29-Apr-08	Contract Programme 29 April 2008	SCS	

Activity ID	Activity Name	Original Duration	Start	Finish	Total Float
A141	Build Wall units	11	26-Sep-08	10-Oct-08	123
Abutment		32	11-Aug-08	23-Sep-08	525
Excavation		3	11-Aug-08	13-Aug-08	124
277	Blinding	1	13-Aug-08	13-Aug-08	124
436	Excavation	2	11-Aug-08	12-Aug-08	124
Base Construction		6	15-Aug-08	22-Aug-08	125
589	Shuttering	3	19-Aug-08	21-Aug-08	125
778	Steelfixing	4	15-Aug-08	20-Aug-08	123
A1	Concrete	1	22-Aug-08	22-Aug-08	125
Wall Construction		20	27-Aug-08	23-Sep-08	525
11	Concrete	1	09-Sep-08	09-Sep-08	123
322	Ballast Wall	5	10-Sep-08	16-Sep-08	156
523	Cladding	5	17-Sep-08	23-Sep-08	525
599	Shuttering	5	02-Sep-08	08-Sep-08	123
788	Steelfixing	4	27-Aug-08	01-Sep-08	123
Pier 1		47	06-Aug-08	09-Oct-08	48
Columns		9	29-Sep-08	09-Oct-08	48
202	Steel fixing	5	29-Sep-08	03-Oct-08	47
383	Shuttering	4	06-Oct-08	09-Oct-08	48
393	Concrete	4	06-Oct-08	09-Oct-08	48
Base Construction		7	11-Aug-08	19-Aug-08	75
191	Steel fixing	5	11-Aug-08	15-Aug-08	47
201	Shuttering	4	13-Aug-08	18-Aug-08	75
81	Concrete	1	19-Aug-08	19-Aug-08	75
Excavation and Blinding		3	06-Aug-08	08-Aug-08	47
360	Excavation	2	06-Aug-08	07-Aug-08	47
800	Blinding	1	08-Aug-08	08-Aug-08	47
Pier 2		49	11-Aug-08	16-Oct-08	57
Excavation and Blinding		3	11-Aug-08	13-Aug-08	49
120	Excavation	2	11-Aug-08	12-Aug-08	49
290	Blinding	1	13-Aug-08	13-Aug-08	49
Base Construction		7	18-Aug-08	26-Aug-08	75
241	Concrete	1	26-Aug-08	26-Aug-08	75
251	Steel fixing	5	18-Aug-08	22-Aug-08	47
261	Shuttering	4	20-Aug-08	25-Aug-08	75
Columns		9	06-Oct-08	16-Oct-08	57
232	Steel fixing	5	06-Oct-08	10-Oct-08	47
403	Shuttering	4	13-Oct-08	16-Oct-08	57
413	Concrete	4	13-Oct-08	16-Oct-08	57
Pier 3		51	14-Aug-08	23-Oct-08	52
Excavation and Blinding		3	14-Aug-08	18-Aug-08	51
810	Blinding	1	18-Aug-08	18-Aug-08	51
820	Excavation	2	14-Aug-08	15-Aug-08	51
Base Construction		7	25-Aug-08	02-Sep-08	75
211	Concrete	1	02-Sep-08	02-Sep-08	75
221	Steel fixing	5	25-Aug-08	29-Aug-08	47
231	Shuttering	4	27-Aug-08	01-Sep-08	75
Columns		9	13-Oct-08	23-Oct-08	52
222	Steel fixing	5	13-Oct-08	17-Oct-08	47
A103	Shuttering	4	20-Oct-08	23-Oct-08	52
A113	Concrete	4	20-Oct-08	23-Oct-08	52
Pier 4		53	19-Aug-08	30-Oct-08	47

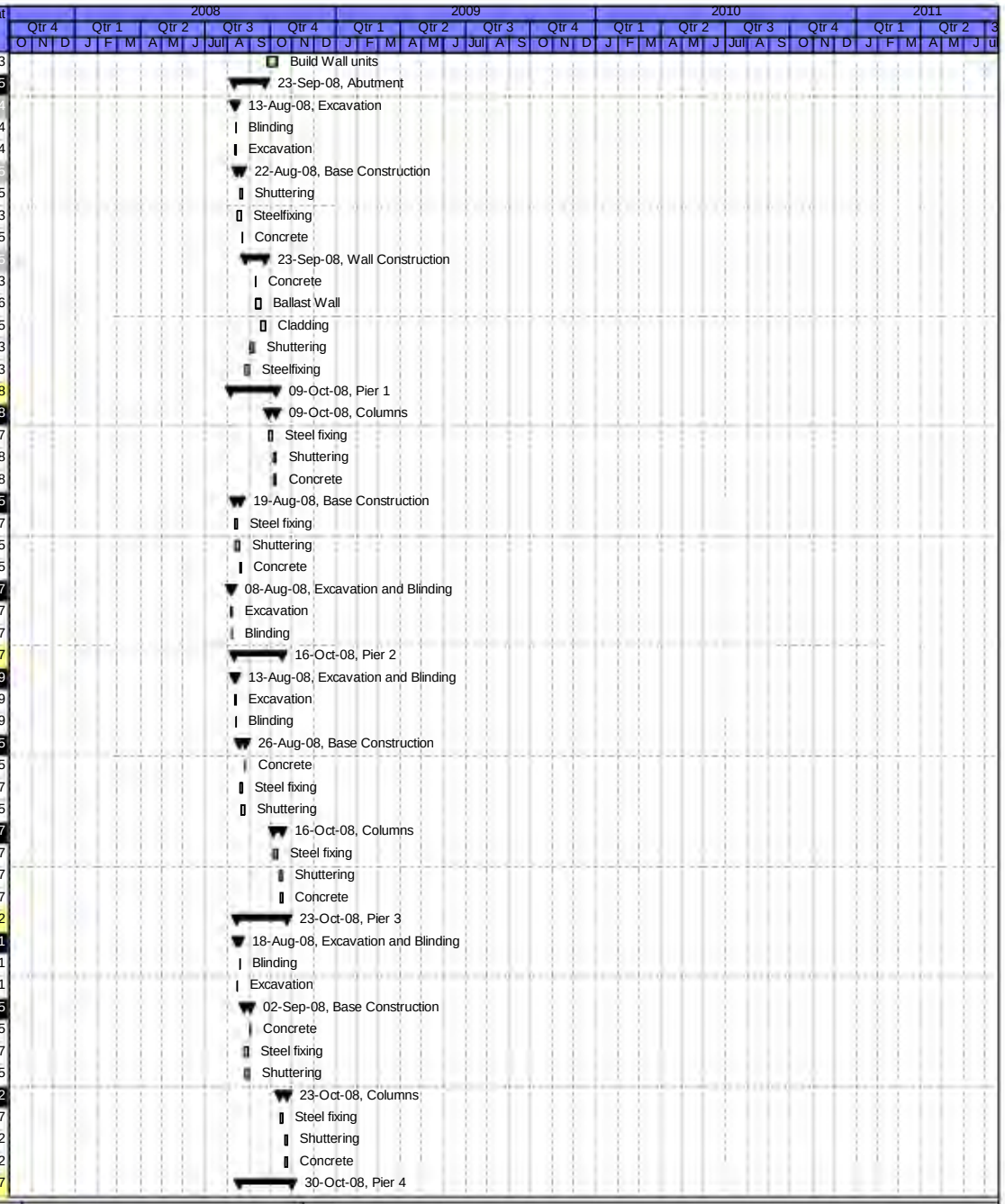

Date	Revision	Checked	Approved
29-Apr-08	Contract Programme 29 April 2008	SCS	

Activity ID	Activity Name	Original Duration	Start	Finish	Total Float
Excavation and Blinding		3	19-Aug-08	21-Aug-08	53
850	Excavation	2	19-Aug-08	20-Aug-08	53
860	Blinding	1	21-Aug-08	21-Aug-08	53
Base Construction		7	01-Sep-08	09-Sep-08	75
331	Concrete	1	09-Sep-08	09-Sep-08	75
341	Steel fixing	5	01-Sep-08	05-Sep-08	47
351	Shuttering	4	03-Sep-08	08-Sep-08	75
Columns		9	20-Oct-08	30-Oct-08	47
242	Steel fixing	5	20-Oct-08	24-Oct-08	47
A123	Shuttering	4	27-Oct-08	30-Oct-08	47
A133	Concrete	4	27-Oct-08	30-Oct-08	47
Pier 5		67	06-Aug-08	06-Nov-08	77
Excavation and Blinding		3	06-Aug-08	08-Aug-08	67
830	Excavation	2	06-Aug-08	07-Aug-08	67
840	Blinding	1	08-Aug-08	08-Aug-08	67
Base Construction		7	08-Sep-08	16-Sep-08	81
271	Concrete	1	16-Sep-08	16-Sep-08	81
291	Steel fixing	5	08-Sep-08	12-Sep-08	47
321	Shuttering	4	10-Sep-08	15-Sep-08	81
Columns		9	27-Oct-08	06-Nov-08	77
262	Steel fixing	5	27-Oct-08	31-Oct-08	53
443	Shuttering	4	03-Nov-08	06-Nov-08	77
453	Concrete	4	03-Nov-08	06-Nov-08	77
Pier 6		69	11-Aug-08	13-Nov-08	72
Excavation and Blinding		3	11-Aug-08	13-Aug-08	69
890	Excavation	2	11-Aug-08	12-Aug-08	69
900	Blinding	1	13-Aug-08	13-Aug-08	69
Base Construction		7	15-Sep-08	23-Sep-08	81
361	Concrete	1	23-Sep-08	23-Sep-08	81
371	Steel fixing	5	15-Sep-08	19-Sep-08	47
381	Shuttering	4	17-Sep-08	22-Sep-08	81
Columns		9	03-Nov-08	13-Nov-08	72
252	Steel fixing	5	03-Nov-08	07-Nov-08	53
423	Shuttering	4	10-Nov-08	13-Nov-08	72
433	Concrete	4	10-Nov-08	13-Nov-08	72
Pier 7		71	14-Aug-08	20-Nov-08	53
Excavation and Blinding		3	14-Aug-08	18-Aug-08	71
870	Excavation	2	14-Aug-08	15-Aug-08	71
880	Blinding	1	18-Aug-08	18-Aug-08	71
Base Construction		7	22-Sep-08	30-Sep-08	81
391	Concrete	1	30-Sep-08	30-Sep-08	81
401	Steel fixing	5	22-Sep-08	26-Sep-08	47
591	Shuttering	4	24-Sep-08	29-Sep-08	81
Columns		9	10-Nov-08	20-Nov-08	53
272	Steel fixing	5	10-Nov-08	14-Nov-08	53
463	Shuttering	4	17-Nov-08	20-Nov-08	53
473	Concrete	4	17-Nov-08	20-Nov-08	53
Superstructure		148	10-Oct-08	22-May-09	101
Span South Ramp to Pier 1		32	10-Oct-08	24-Nov-08	94
601	Fix Bearings	1	20-Oct-08	20-Oct-08	96
611	Temporary Beam Supports	5	10-Oct-08	16-Oct-08	48
621	Place Beams	1	17-Oct-08	17-Oct-08	48

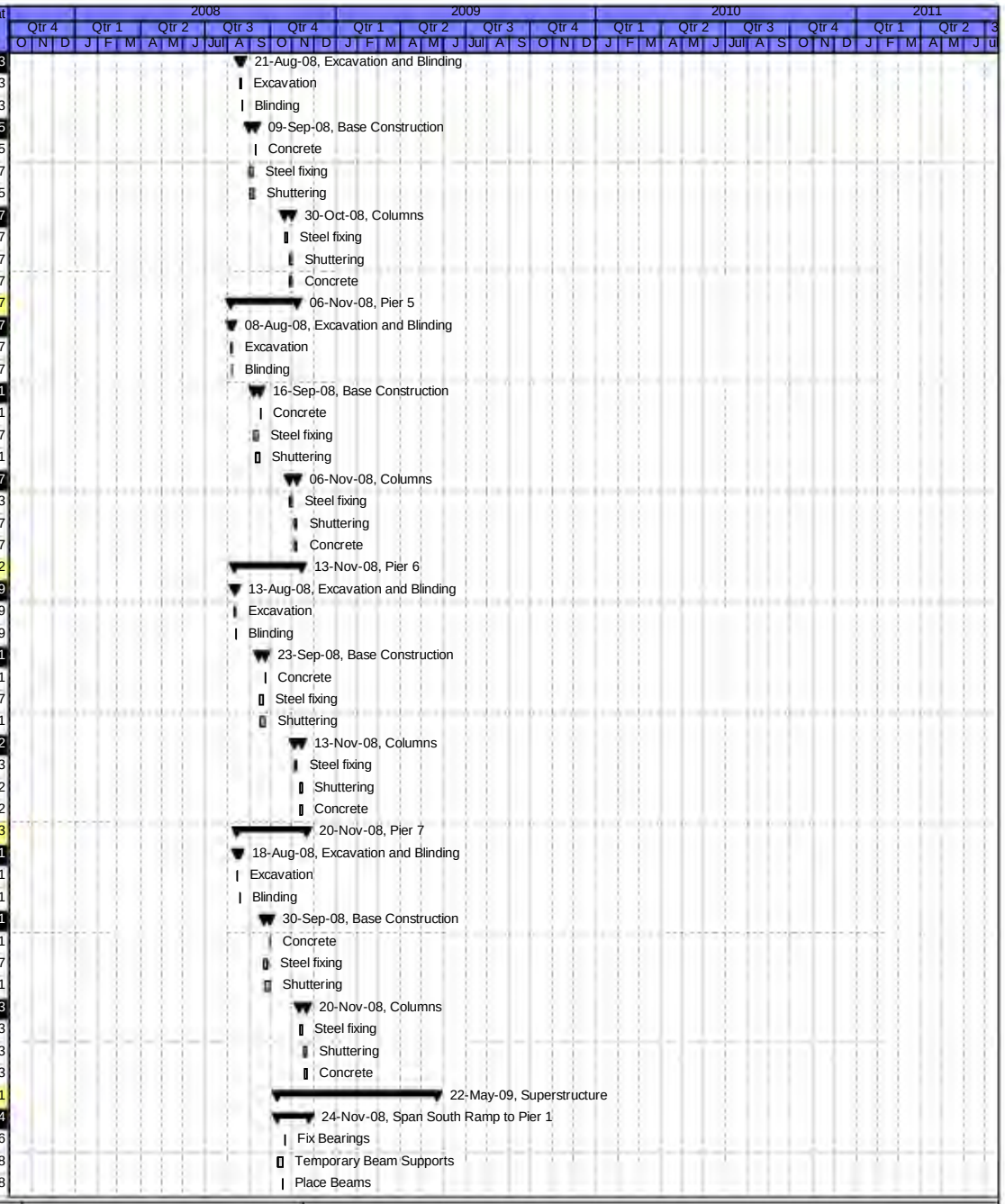

Date	Revision	Checked	Approved
29-Apr-08	Contract Programme 29 April 2008	SCS	

Activity ID	Activity Name	Original Duration	Start	Finish	Total Float
631	Deck Reinforcement	15	29-Oct-08	18-Nov-08	90
641	Permanent Formwork	7	20-Oct-08	28-Oct-08	48
651	Deck Shuttering	25	20-Oct-08	21-Nov-08	94
661	Cast Diaphragm	1	03-Nov-08	03-Nov-08	107
671	Cast Deck	1	10-Nov-08	10-Nov-08	103
681	Cast Parapet Beams	1	24-Nov-08	24-Nov-08	94
Span Pier 1 to Pier 2		**39**	**10-Oct-08**	**04-Dec-08**	**87**
411	Temporary Beam Supports	5	10-Oct-08	16-Oct-08	55
421	Place Beams	1	17-Oct-08	17-Oct-08	55
431	Fix Bearings	1	20-Oct-08	20-Oct-08	104
441	Permanent Formwork	7	29-Oct-08	06-Nov-08	48
451	Deck Shuttering	25	29-Oct-08	03-Dec-08	87
461	Deck Reinforcement	15	10-Nov-08	28-Nov-08	101
471	Cast Diaphragm	1	12-Nov-08	12-Nov-08	100
481	Cast Deck	1	19-Nov-08	19-Nov-08	96
491	Cast Parapet Beams	1	04-Dec-08	04-Dec-08	87
Span Pier 2 to Pier 3		**72**	**24-Oct-08**	**17-Feb-09**	**44**
501	Temporary Beam Supports	5	24-Oct-08	30-Oct-08	52
511	Place Beams	1	12-Jan-09	12-Jan-09	12
521	Fix Bearings	1	13-Jan-09	13-Jan-09	53
531	Permanent Formwork	7	13-Jan-09	21-Jan-09	12
541	Deck Shuttering	25	13-Jan-09	16-Feb-09	44
551	Deck Reinforcement	15	22-Jan-09	11-Feb-09	47
561	Cast Diaphragm	1	27-Jan-09	27-Jan-09	57
571	Cast Deck	1	03-Feb-09	03-Feb-09	53
581	Cast Parapet Beams	1	17-Feb-09	17-Feb-09	44
Span Pier 3 to Pier 4		**39**	**24-Dec-08**	**26-Feb-09**	**37**
592	Possession 4 (16hrs)	0		31-Dec-08*	0
691	Fix Bearings	1	12-Jan-09	12-Jan-09	54
701	Temporary Beam Supports	5	05-Jan-09	09-Jan-09	12
711	Place Beams	1	10-Jan-09	10-Jan-09	18
721	Deck Reinforcement	15	02-Feb-09	20-Feb-09	40
731	Permanent Formwork	7	22-Jan-09	30-Jan-09	12
741	Deck Shuttering	25	22-Jan-09	25-Feb-09	37
751	Cast Diaphragm	1	05-Feb-09	05-Feb-09	50
761	Cast Deck	1	12-Feb-09	12-Feb-09	46
771	Cast Parapet Beams	1	26-Feb-09	26-Feb-09	37
910	Possession 3 (16hrs)	0		24-Dec-08*	0
Span Pier 6 to Pier 7		**44**	**16-Jan-09**	**18-Mar-09**	**23**
861	Temporary Beam Supports	5	16-Jan-09	23-Jan-09	24
871	Place Beams	1	30-Jan-09	02-Feb-09	19
881	Fix Bearings	1	02-Feb-09	03-Feb-09	39
891	Permanent Formwork	7	11-Feb-09	19-Feb-09	12
901	Deck Shuttering	25	11-Feb-09	17-Mar-09	23
911	Deck Reinforcement	15	20-Feb-09	12-Mar-09	26
921	Cast Diaphragm	1	25-Feb-09	25-Feb-09	36
931	Cast Deck	1	04-Mar-09	04-Mar-09	32
941	Cast Parapet Beams	1	18-Mar-09	18-Mar-09	23
Span Pier 7 to North Ramp		**32**	**23-Jan-09**	**09-Mar-09**	**30**
951	Temporary Beam Supports	5	23-Jan-09	30-Jan-09	19
961	Place Beams	1	30-Jan-09	02-Feb-09	19
971	Fix Bearings	1	02-Feb-09	03-Feb-09	39

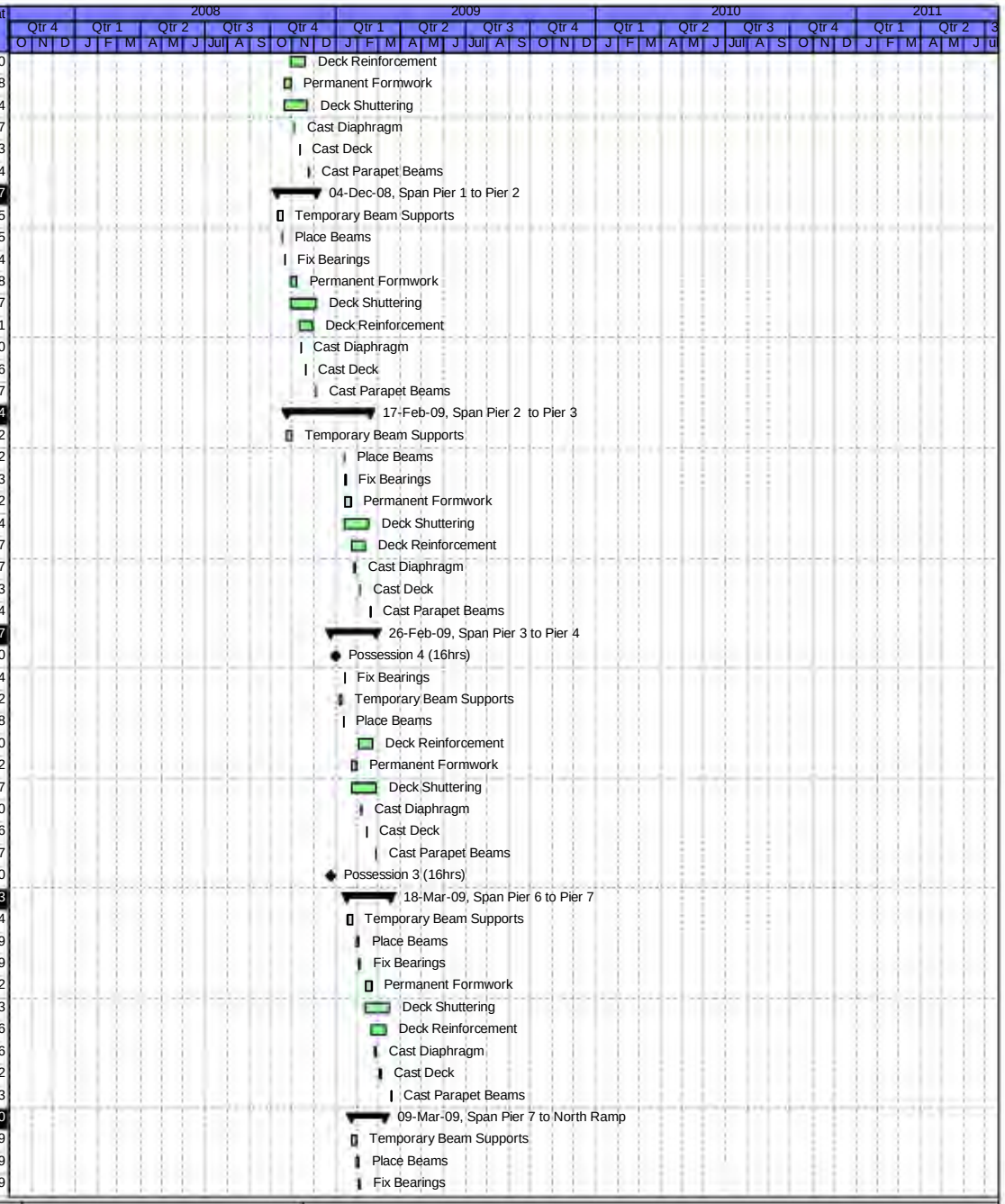

Date	Revision	Checked	Approved
29-Apr-08	Contract Programme 29 April 2008	SCS	

Activity ID	Activity Name	Original Duration	Start	Finish	Total Float
981	Permanent Formwork	7	02-Feb-09	10-Feb-09	12
991	Deck Shuttering	25	02-Feb-09	06-Mar-09	30
A1001	Deck Reinforcement	15	11-Feb-09	03-Mar-09	33
A1011	Cast Diaphragm	1	16-Feb-09	16-Feb-09	43
A1021	Cast Deck	1	23-Feb-09	23-Feb-09	39
A1031	Cast Parapet Beams	1	09-Mar-09	09-Mar-09	30
Span Pier 4 to Pier 5		44	05-Feb-09	07-Apr-09	12
1011	Fix Bearings	1	20-Feb-09	23-Feb-09	28
1021	Temporary Beam Supports	5	05-Feb-09	12-Feb-09	24
1031	Place Beams	1	19-Feb-09	20-Feb-09	19
1041	Deck Reinforcement	15	12-Mar-09	01-Apr-09	15
1051	Permanent Formwork	7	03-Mar-09	11-Mar-09	12
1061	Deck Shuttering	25	03-Mar-09	06-Apr-09	12
1071	Cast Diaphragm	1	17-Mar-09	17-Mar-09	25
1081	Cast Deck	1	24-Mar-09	24-Mar-09	21
1091	Cast Parapet Beams	1	07-Apr-09	07-Apr-09	12
Span Pier 5 to Pier 6		32	12-Feb-09	27-Mar-09	16
1001	Cast Parapet Beams	1	27-Mar-09	27-Mar-09	16
781	Temporary Beam Supports	5	12-Feb-09	19-Feb-09	19
791	Fix Bearings	1	20-Feb-09	23-Feb-09	25
801	Place Beams	1	19-Feb-09	20-Feb-09	19
811	Permanent Formwork	7	20-Feb-09	02-Mar-09	12
821	Deck Reinforcement	15	03-Mar-09	23-Mar-09	19
831	Deck Shuttering	25	20-Feb-09	26-Mar-09	16
841	Cast Diaphragm	1	06-Mar-09	06-Mar-09	29
851	Cast Deck	1	13-Mar-09	13-Mar-09	25
Deck Finishes		57	03-Mar-09	22-May-09	101
282	Waterproofing	8	03-Apr-09	15-Apr-09	12
483	Expansion Joints	9	16-Apr-09	28-Apr-09	17
493	Parapet Rails	40	03-Mar-09	28-Apr-09	17
503	Walkway Construction	20	24-Apr-09	22-May-09	101
Trackwork		11	16-Apr-09	30-Apr-09	12
339	Containment Slabs	10	16-Apr-09	29-Apr-09	12
90	Fix Rails	5	24-Apr-09	30-Apr-09	12
M & E Works		15	01-May-(	24-May-09	102
373	Catenary Cables	5	07-May-(	13-May-09	12
52	OLE Supports	3	01-May-(	06-May-09	12
A14140	Possession 5 (12hrs)	0		23-May-09*	0
A14150	OLE Supports and Catenary over Tracks	1	24-May-(	24-May-09	143
05C Edinburgh Park Central (exc.) to Gogarburn (inc.)		563	28-Mar-08	09-Jul-10	250
E & M Installations		158	11-Nov-09	09-Jul-10	250
Edinburgh Park to Depot		72	26-Mar-10	09-Jul-10	250
A4163	Access for visual inspection for E&M wayside installa	0	26-Mar-10		322
A4164	Access for E&M wayside installation (05C)	0	28-Apr-10		301
A4165	Installation of poles and building fixings	10	28-Apr-10	12-May-10	7
A4170	Overhead Catenary Line	26	24-May-:	29-Jun-10	0
A4178	Access for visual inspection to cable pits for cable la	0	21-Apr-10		305
A4179	Access to cable pits for cable laying (05C)	0	24-May-:		284
A4180	Install Electrical Cables	17	24-May-:	16-Jun-10	86
A4190	Install Fibre Optic Cables	17	24-May-:	16-Jun-10	103
A4200	Install Signalling Wayside Equipment	17	17-Jun-10	09-Jul-10	86
Depot to Gogarburn		42	11-Nov-09	25-Jan-10	366

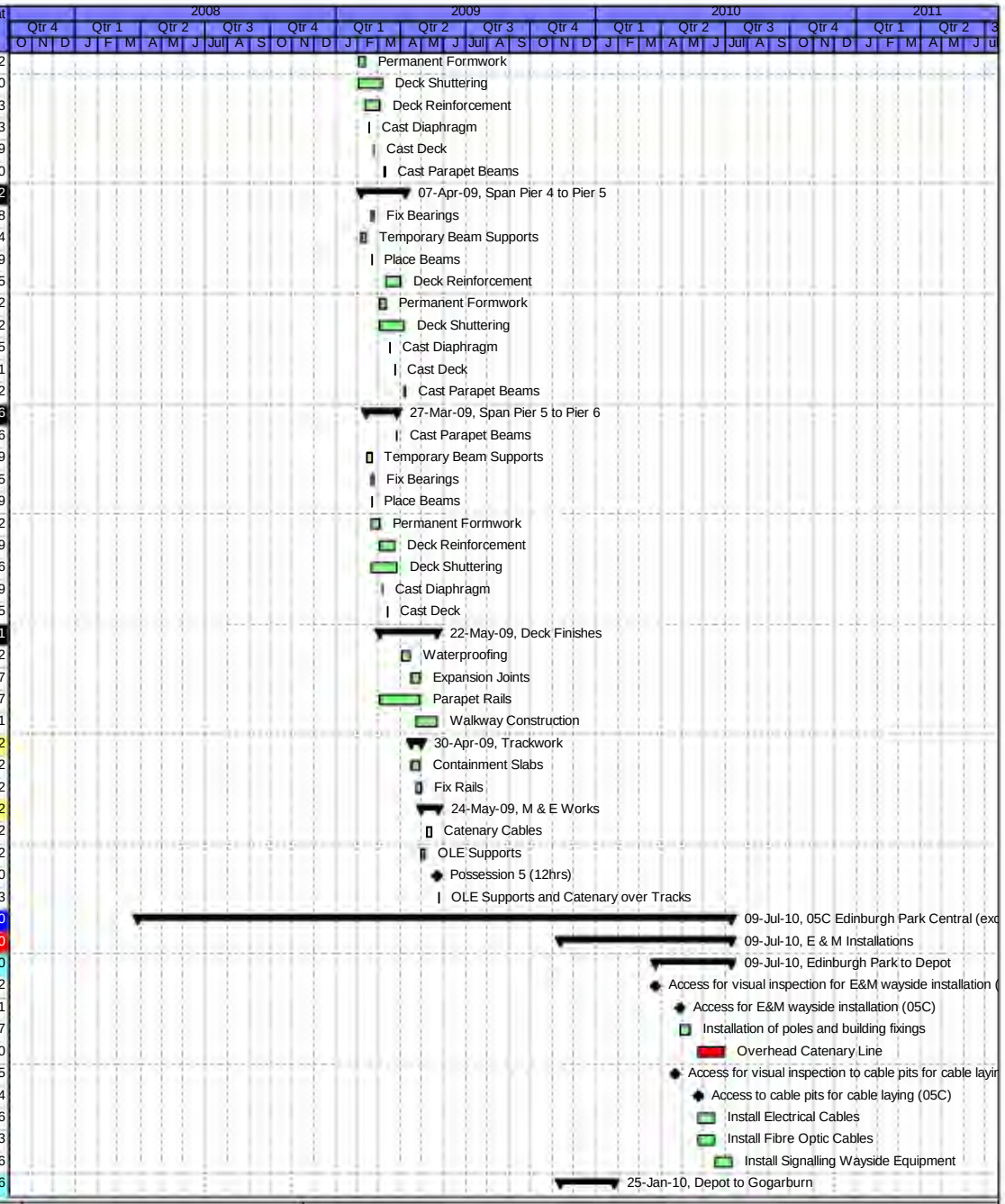

Date	Revision	Checked	Approved
29-Apr-08	Contract Programme 29 April 2008	SCS	

Activity ID	Activity Name	Original Duration	Start	Finish	Total Float
A16900	Access for visual inspection for E&M wayside installa	0	11-Nov-09		408
A16910	Access for E&M wayside installation (05C)	0	14-Dec-09		387
A16920	Installation of poles and building fixings	5	14-Dec-09	18-Dec-09	9
A16930	Overhead Catenary Line	11	04-Jan-10	18-Jan-10	9
A16940	Access for visual inspection to cable pits for cable la	0	18-Nov-09		403
A16950	Access to cable pits for cable laying (05C)	0	04-Jan-10		382
A16960	Install Electrical Cables	8	04-Jan-10	13-Jan-10	202
A16970	Install Fibre Optic Cables	8	04-Jan-10	13-Jan-10	210
A16980	Install Signalling Wayside Equipment	8	14-Jan-10	25-Jan-10	202
Edinburgh Park (exc.) to Gyle Centre (inc.)		334	23-Apr-08	31-Aug-09	461
Trackwork (760m)		166	09-Jun-08	12-Feb-09	434
12950	Issue Construction Drawings	0		09-Jun-08*	0
140	Earthworks and Subbase	20	08-Jul-08	05-Aug-08	48
183	OLE Foundations - Drainage	30	06-Aug-08	16-Sep-08	48
779	Track Formation and Ducts	16	17-Sep-08	08-Oct-08	48
789	Track laying	20	06-Nov-08	04-Dec-08	48
799	Track Finishes	24	05-Dec-08	21-Jan-09	355
809	Road Crossings	20	09-Oct-08	05-Nov-08	48
819	Fencing	16	22-Jan-09	12-Feb-09	434
Gyle CentreTram Stop		315	21-May-(	31-Aug-09	461
12960	Issue Construction Drawings	0		21-May-08*	0
141	Civil Engineering and Building Works	65	05-Dec-08	19-Mar-09	369
298	Order REC Supply	0	15-Apr-09		556
A2170	Deliver and Install Shelter	10	29-May-(	12-Jun-09	297
A5318	Access for visual inspection for E&M Tram Stop inst	0	13-May-(		567
A5319	Access for E&M Tram Stop installation (05C Gyle)	0	12-Jun-09		313
A5320	Install LV Power Supply and LV Power Equipment	25	12-Jun-09	17-Jul-09	297
A5330	Install Telecon Equipment	20	17-Jul-09	17-Aug-09	307
A5340	Install Station Control Equipment + AFC Equipment	25	17-Jul-09	24-Aug-09	297
A5350	Package Test Tramstop	5	24-Aug-09	31-Aug-09	297
Gyle Centre Tram Stop Retaining Wall (W16)		40	23-Apr-08	20-Jun-08	59
12970	Issue Construction Drawings	0		23-Apr-08*	0
139	Wall Construction	20	23-May-(	20-Jun-08	59
Gyle Centre (exc.) to Depot Stop (inc.)		537	28-Apr-08	02-Jul-10	91
A8 Underpass (W28)		299	28-Apr-08	14-Jul-09	0
12059	SDS Design Complete	0		28-Apr-08*	0
12980	Issue Construction Drawings	0		09-Jul-08*	0
143	Phase 1	46	08-Aug-08	10-Oct-08	0
153	Working around BT ducts (dummy)	20	13-Oct-08	07-Nov-08	0
519	Phase 2	56	10-Nov-08	10-Feb-09	0
529	Phase 3	58	11-Feb-09	05-May-09	0
539	Phase 4	49	06-May-(	14-Jul-09	0
549	Subway Construction	49	06-May-(	14-Jul-09	0
Depot Access Bridge (S32)		279	06-Nov-08	07-Jan-10	0
12990	Issue Construction Drawings	0		06-Nov-08*	0
144	Dummy	115	15-Jul-09	07-Jan-10	0
Trackwork (562m)		509	09-Jun-08	02-Jul-10	91
10590	Issue Construction Drawings	0		09-Jun-08*	0
1069	Bulk Excavation	12	08-Jan-10	25-Jan-10	0
1079	Drainage and OLE Foundations	23	26-Jan-10	25-Feb-10	0
1089	Track Formation and Ducts	12	26-Feb-10	15-Mar-10	0
478	Track Laying	47	16-Mar-10	21-May-10	0

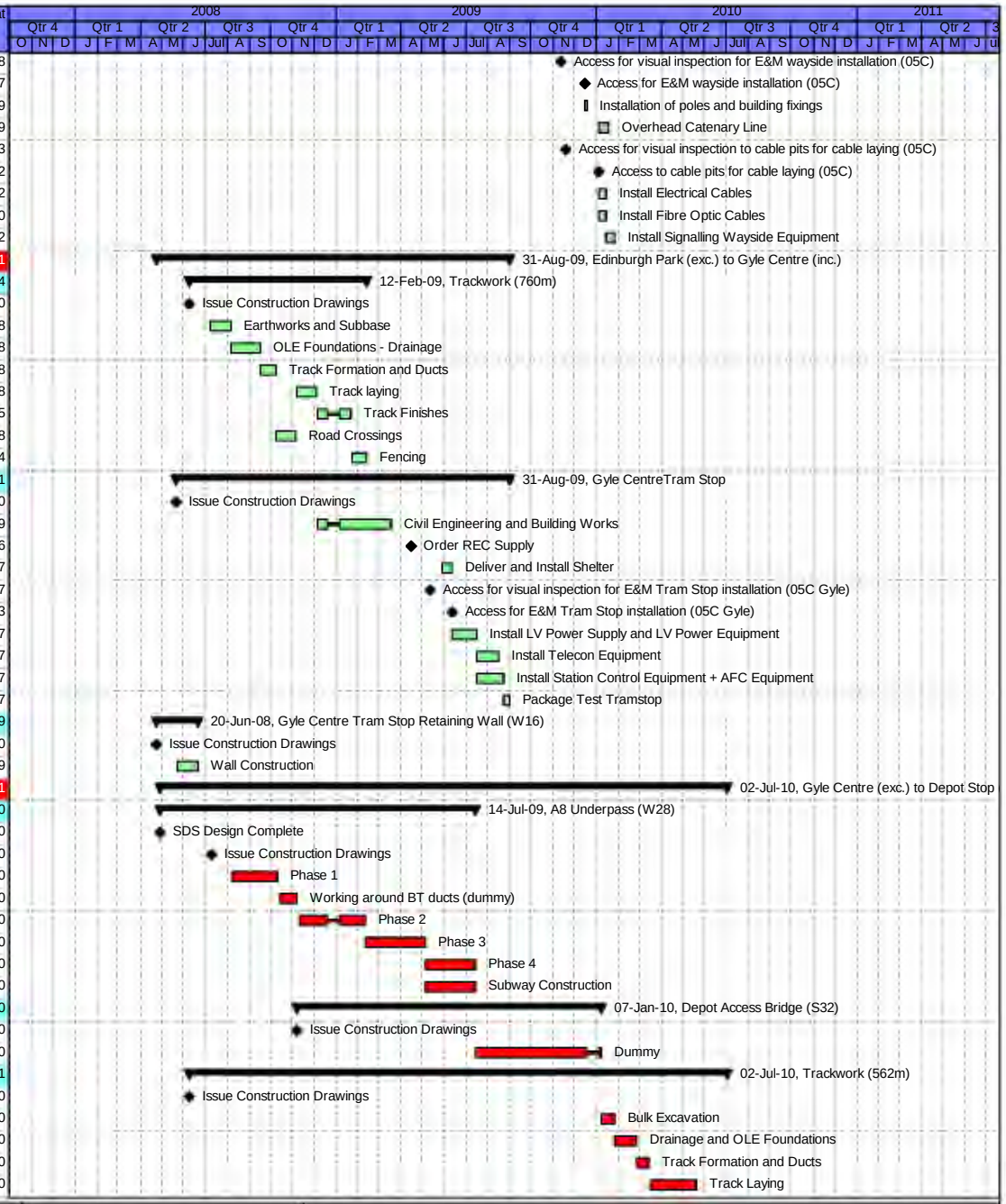

Date	Revision	Checked	Approved
29-Apr-08	Contract Programme 29 April 2008	SCS	

Activity ID	Activity Name	Original Duration	Start	Finish	Total Float
A2380	Track Finishes	18	24-May-:	17-Jun-10	7
A2390	Fencing and Reinstatements	11	18-Jun-10	02-Jul-10	91
A8 Retaining Walls (W16)		95	02-Jun-08	13-Oct-08	9
145	Soil Nailing	95	02-Jun-08	13-Oct-08	9
Depot Stop (exc.) to Gogarburn (inc.)		427	28-Mar-08	15-Dec-09	386
Trackwork (562m)		305	09-Jun-08	01-Sep-09	295
13020	Issue Construction Drawings	0		09-Jun-08*	0
148	Ramp Wall out of depot (details unknown)	30	14-Oct-08	24-Nov-08	108
288	Earthworks and Subbase	12	25-Nov-08	11-Dec-08	108
749	Drainage and OLE Foundations	23	12-Dec-08	27-Jan-09	108
759	Track Formation and Ducts	12	28-Jan-09	12-Feb-09	108
769	Track Laying	32	08-Jun-09	21-Jul-09	30
A2330	Track Finishes	18	22-Jul-09	17-Aug-09	92
A2340	Fencing and Reinstatements	11	18-Aug-09	01-Sep-09	295
Gogarburn Tram Stop		427	28-Mar-08	15-Dec-09	386
13030	Issue Construction Drawings	0		28-Mar-08*	0
149	Civil Engineering and Building Works	65	15-Jul-09	14-Oct-09	224
308	Order REC Supply	0	31-Jul-09		481
A2200	Deliver and Install Shelter	10	14-Sep-09	28-Sep-09	222
A5358	Access for visual inspection for E&M Tram Stop inst	0	27-Aug-09		491
A5359	Access for E&M Tram Stop installation (05C Gogart	0	28-Sep-09		237
A5360	Install LV Power Supply and LV Power Equipment	25	28-Sep-09	02-Nov-09	222
A5370	Install Telecon Equipment	20	02-Nov-09	01-Dec-09	232
A5380	Install Station Control Equipment + AFC Equipment	25	02-Nov-09	08-Dec-09	222
A5390	Package Test Tramstop	5	08-Dec-09	15-Dec-09	222
SECTION O6 GOGAR DEPOT		474	21-Apr-08	25-Mar-10	323
Opening Sequence A (Airport to Haymarket)		474	21-Apr-08	25-Mar-10	323
06A Gogar Depot		474	21-Apr-08	25-Mar-10	323
Depot		474	21-Apr-08	25-Mar-10	323
Earthworks		95	02-Jun-08	13-Oct-08	9
1149	Earth Works	95	02-Jun-08	13-Oct-08	2
1289	Drainage and Outfall	90	09-Jun-08	13-Oct-08	9
Trackwork (3492m)		180	14-Oct-08	10-Jul-09	9
154	Trackwork	180	14-Oct-08	10-Jul-09	9
204	Track Laying	100	14-Jan-09	05-Jun-09	30
Depot Building		474	21-Apr-08	25-Mar-10	323
A17170	Foundations	55	07-Jul-08	22-Sep-08	2
A17180	Substructure and Superstructure (Steelwork)	50	05-Aug-08	13-Oct-08	62
A17190	Pits	40	02-Sep-08	27-Oct-08	52
A17200	Substructure and Superstructure	60	02-Sep-08	24-Nov-08	32
A17210	Building Envelope	90	04-Sep-08	22-Jan-09	0
Procurement		94	21-Apr-08	03-Sep-08	0
1158	Issue Construction Drawings	0		21-Apr-08*	0
1159	Steel Work Fabrication	64	05-Jun-08	03-Sep-08	0
Building Services		160	12-Dec-08	12-Aug-09	0
1249	Building Services Installation	140	12-Dec-08	14-Jul-09	0
1259	Building Services Commissioning	130	06-Feb-09	12-Aug-09	0
Fitting Out & Finishes		160	12-Dec-08	12-Aug-09	0
1269	Fitting out and Finishes	160	12-Dec-08	12-Aug-09	0
E & M Workshop Equipment Installation		150	15-Jul-09	25-Feb-10	343
A2542	Access for visual inspection forE&M workshop equip	0	15-Jul-09		523

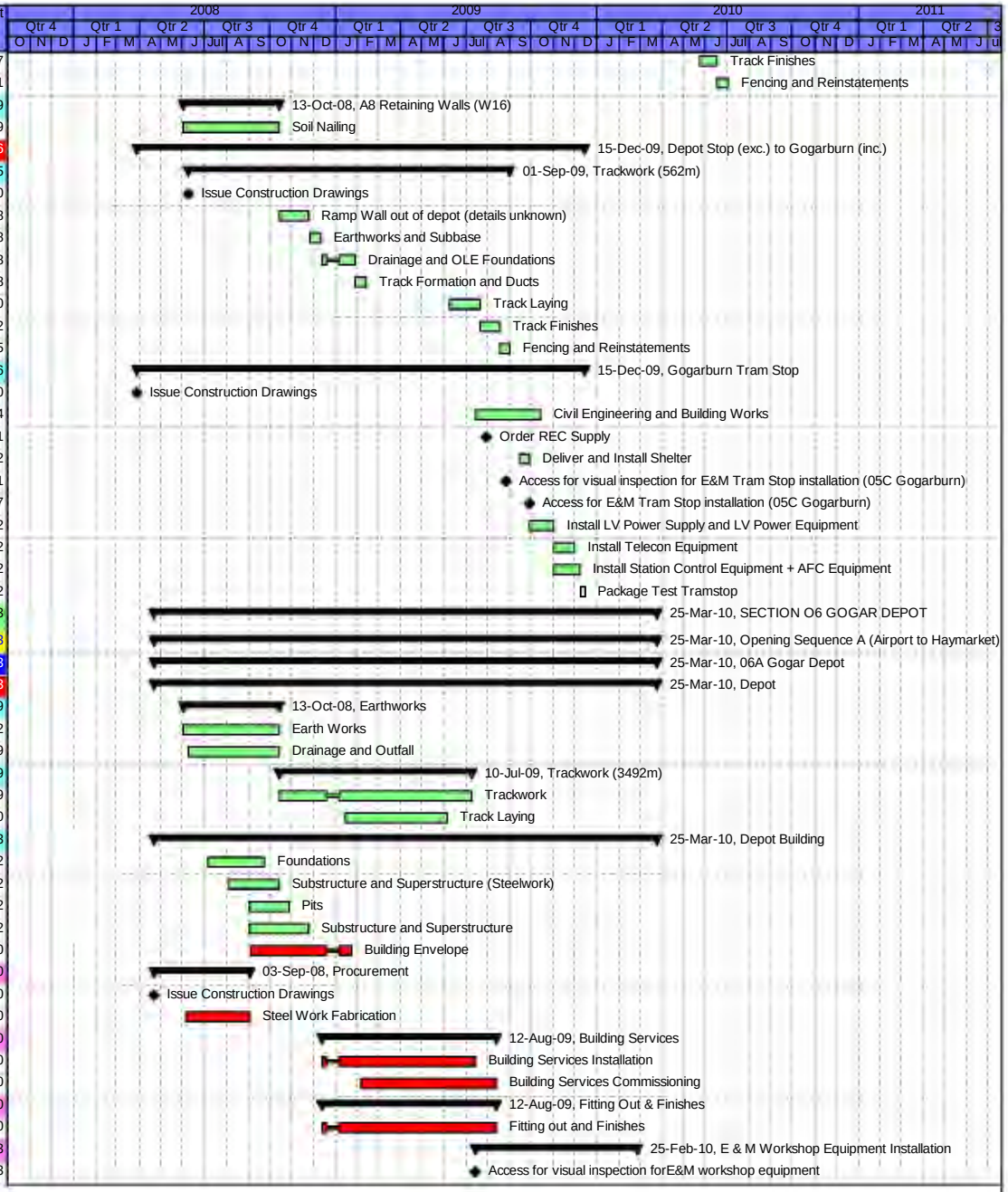

Date	Revision	Checked	Approved
29-Apr-08	Contract Programme 29 April 2008	SCS	

Activity ID	Activity Name	Original Duration	Start	Finish	Total Float
A2544	Access for E&M workshop equipment	0	13-Aug-09		502
A2545	Installation of workshop equipment	130	13-Aug-09	25-Feb-10	0
Inspection & Handover		20	26-Feb-10	25-Mar-10	0
A2550	Inspection and Testing	20	26-Feb-10	25-Mar-10	0
Depot Substation		393	14-Jul-08	22-Feb-10	347
306	Order REC supply from Scottish Power	0	07-Oct-08		392
316	Civil Engineering and Building Works	140	14-Jul-08	10-Feb-09	392
A2518	Access for visual inspection for E&M Substation insta	0	12-Jan-09		654
A2519	Access for E&M Substation installation (06A Depot)	0	11-Feb-09		411
A5930	Power Infeed from Public Net available inc HV cable	0	11-Feb-09		392
A5940	Install LV Power Supply and LV Power Equipment	15	23-Nov-09	15-Dec-09	193
A5950	Installation of TPS Equipment	30	08-Dec-09	02-Feb-10	169
A5960	Install Telecom and Scada	15	12-Jan-10	02-Feb-10	169
A5970	Testing and Commissioning	14	02-Feb-10	22-Feb-10	169
A6330	Installation of SIG-interlocking cubicle	15	08-Dec-09	29-Dec-09	207
A6340	Commissioning of SIG -interlocking cubicle	5	29-Dec-09	05-Jan-10	207
Access Roads		255	28-Jul-08	10-Aug-09	152
1179	North Side	45	28-Jul-08	29-Sep-08	152
1189	South Side	20	30-Sep-08	27-Oct-08	152
1199	Finishes	190	28-Oct-08	10-Aug-09	152
1209	Car Park & Hardstanding	160	09-Sep-08	07-May-09	217
1219	Track & Stabling Area	70	09-Sep-08	16-Dec-08	40
1229	Shunting Area	70	23-Sep-08	13-Jan-09	30
1239	Handover to trackworks resource	0		13-Jan-09	30
E & M Installations		129	11-Jun-09	11-Dec-09	387
A4203	Access for visual inspection for E&M Depot installatio	0	11-Jun-09		516
A4204	Access for E&M Depot installation	0	13-Jul-09		495
A4205	Installation of poles and building fixings	32	13-Jul-09	26-Aug-09	9
A4210	Overhead Catenary Line	76	27-Aug-09	11-Dec-09	9
A4218	Access for visual inspection to cable pits for cable la	0	11-Aug-09		474
A4219	Access to cable pits for cable laying (Depot)	0	10-Sep-09		453
A4220	Install Electrical Cables	12	10-Sep-09	25-Sep-09	246
A4230	Install Fibre Optic Cables	12	10-Sep-09	25-Sep-09	277
A4240	Install Signalling Wayside Equipment	12	28-Sep-09	13-Oct-09	246
SECTION 07 GOGAR TO EDINBURGH AIRPORT		576	22-Feb-08	25-Jun-10	261
Opening Sequence A (Airport to Haymarket)		576	22-Feb-08	25-Jun-10	261
07A Gogarburn (exc.) to Edinburgh Airport (inc.)		576	22-Feb-08	25-Jun-10	261
E & M Installations		101	04-Dec-09	12-May-10	291
A4243	Access for visual inspection for E&M wayside installa	0	04-Dec-09		392
A4244	Access for E&M wayside installation (07A)	0	19-Jan-10		371
A4245	Installation of poles and building fixings	20	19-Jan-10	15-Feb-10	9
A4250	Overhead Catenary Line	48	16-Feb-10	23-Apr-10	9
A4258	Access for visual inspection to cable pits for cable la	0	29-Jan-10		362
A4259	Access to cable pits for cable laying (07A)	0	02-Mar-10		341
A4260	Install Electrical Cables	25	02-Mar-10	06-Apr-10	122
A4270	Install Fibre Optic Cables	25	02-Mar-10	06-Apr-10	152
A4280	Install Signalling Wayside Equipment	25	07-Apr-10	12-May-10	122
Gogarburn (exc.) to Inglishton Park & Ride (inc.)		547	22-Feb-08	13-May-10	290
Gogarburn Underbridge (S29)		184	13-May-(	11-Feb-09	44
13040	Issue Construction Drawings	0		14-May-08*	0
13041	Treat area of contaminated land (Dummy duration)	130	13-May-(	10-Nov-08	112

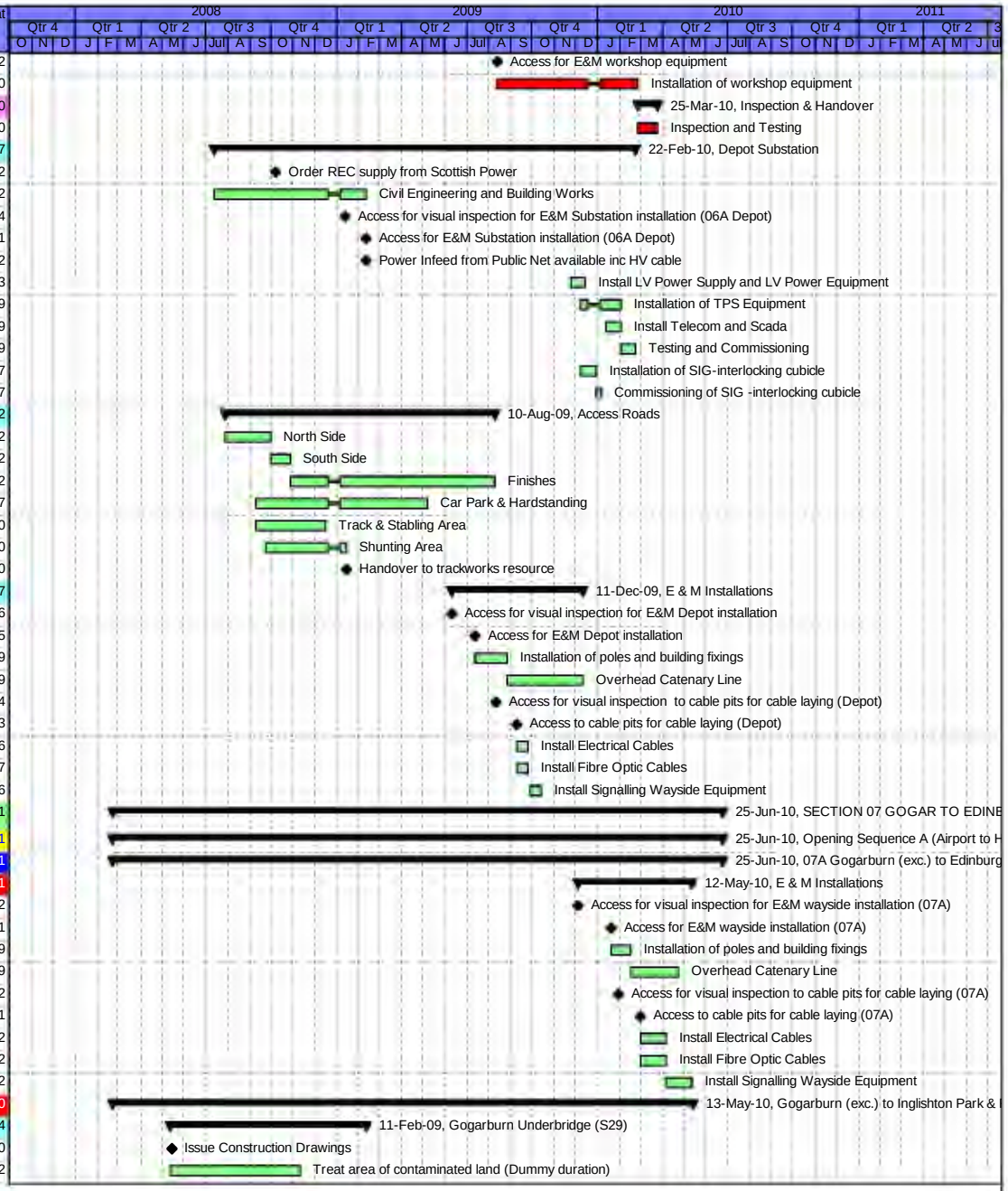

Date	Revision	Checked	Approved
29-Apr-08	Contract Programme 29 April 2008	SCS	

Activity ID	Activity Name	Original Duration	Start	Finish	Total Float
159	Temporary Access Roads-Bulk Excavation-Piling Pla	16	13-Jun-08	04-Jul-08	45
179	East Abutment-Piles and Columns	36	07-Jul-08	26-Aug-08	44
189	East Abutment-Reinforced Earth	15	27-Aug-08	16-Sep-08	44
199	East Abutment-Parapets and Run on Slabs	29	27-Nov-08	21-Jan-09	44
209	West Abutment-Piles and Columns	36	14-Jul-08	02-Sep-08	54
219	West Abutment-Reinforced Earth	15	17-Sep-08	07-Oct-08	44
229	West Abutment-Parapets and Run on Slabs	29	19-Dec-08	11-Feb-09	44
239	Bridge Deck	41	08-Oct-08	04-Dec-08	44
Gogarburn Culvert No1 (S30)		75	01-Aug-08	17-Nov-08	95
13050	Issue Construction Drawings	0		01-Aug-08*	0
160	Temporary Access Roads-Divert Flows-Bulk Excava	19	02-Sep-08	26-Sep-08	106
249	Precast Culvert Units	5	29-Sep-08	03-Oct-08	95
259	Reinforced Concrete Apron and Wingwalls	20	06-Oct-08	31-Oct-08	95
269	Backfill and Finishes	11	03-Nov-08	17-Nov-08	95
Trackwork (1750m)		456	14-Mar-08	25-Jan-10	188
12099	SDS Design Complete	0		14-Mar-08*	0
13060	Issue Construction Drawings	0		07-Aug-08*	0
162	Earthworks and Subbase	27	12-Feb-09	20-Mar-09	44
399	Drainage and OLE Foundations	35	23-Mar-09	12-May-09	44
409	Bottom Balast and Ducts	35	13-May-(	01-Jul-09	44
419	Track Laying	65	22-Jul-09	21-Oct-09	30
A1990	Top Ballast	22	22-Oct-09	20-Nov-09	188
A2020	Fencing & Trackside Finishes	35	23-Nov-09	25-Jan-10	188
Ingliston Park and Ride Tram Stop		501	22-Feb-08	09-Mar-10	336
12089	SDS Design Complete	0		22-Feb-08*	0
13070	Issue Construction Drawings	0		14-May-08*	0
163	Civil Engineering and Building Works	65	29-Jul-09	28-Oct-09	214
218	Order REC Supply	0	12-Oct-09		431
A1940	Deliver and Install Shelter	10	23-Nov-09	08-Dec-09	172
A5398	Access for visual inspection for E&M Tram Stop inst	0	06-Nov-09		441
A5399	Access for E&M Tram Stop installation (07A Inglisto	0	08-Dec-09		186
A5400	Install LV Power Supply and LV Power Equipment	25	08-Dec-09	26-Jan-10	172
A5410	Install Telecon Equipment	20	26-Jan-10	23-Feb-10	182
A5420	Install Station Control Equipment + AFC Equipment	25	26-Jan-10	02-Mar-10	172
A5430	Package Test Tramstop	5	02-Mar-10	09-Mar-10	172
Ingliston Park and Ride Substation		181	08-Jul-09	06-Apr-10	317
216	Order REC supply from Scottish Power	0		08-Jul-09	403
226	Civil Engineering and Building Works	65	29-Jul-09	28-Oct-09	403
A1968	Access for visual inspection for E&M Substation inst	0	29-Sep-09		468
A1969	Access for E&M Substation installation (07A Inglistio	0	29-Oct-09		432
A5980	Power Infeed from Public Net available inc HV cable	0	29-Oct-09		403
A5990	Install LV Power Supply and LV Power Equipment	15	19-Jan-10	09-Feb-10	356
A6000	Installation of TPS Equipment	30	02-Feb-10	16-Mar-10	153
A6010	Install Telecom and Scada	15	23-Feb-10	16-Mar-10	153
A6020	Testing and Commissioning	14	16-Mar-10	06-Apr-10	153
Enabling Works		28	03-Mar-08	10-Apr-08	87
A2000	Site and Vegetation Clearance	28	03-Mar-08	10-Apr-08	87
Tram		13	24-Apr-10	13-May-10	126
A6380	Track Testing of Tram	20	24-Apr-10	13-May-10	180
Ingliston Park & Ride (exc.) to Edinburgh Airport (inc.)		571	03-Mar-08	25-Jun-10	261
Enabling Works		39	03-Mar-08	25-Apr-08	256
A1920	Construct New Hotel Car Park	20	31-Mar-08	25-Apr-08	256

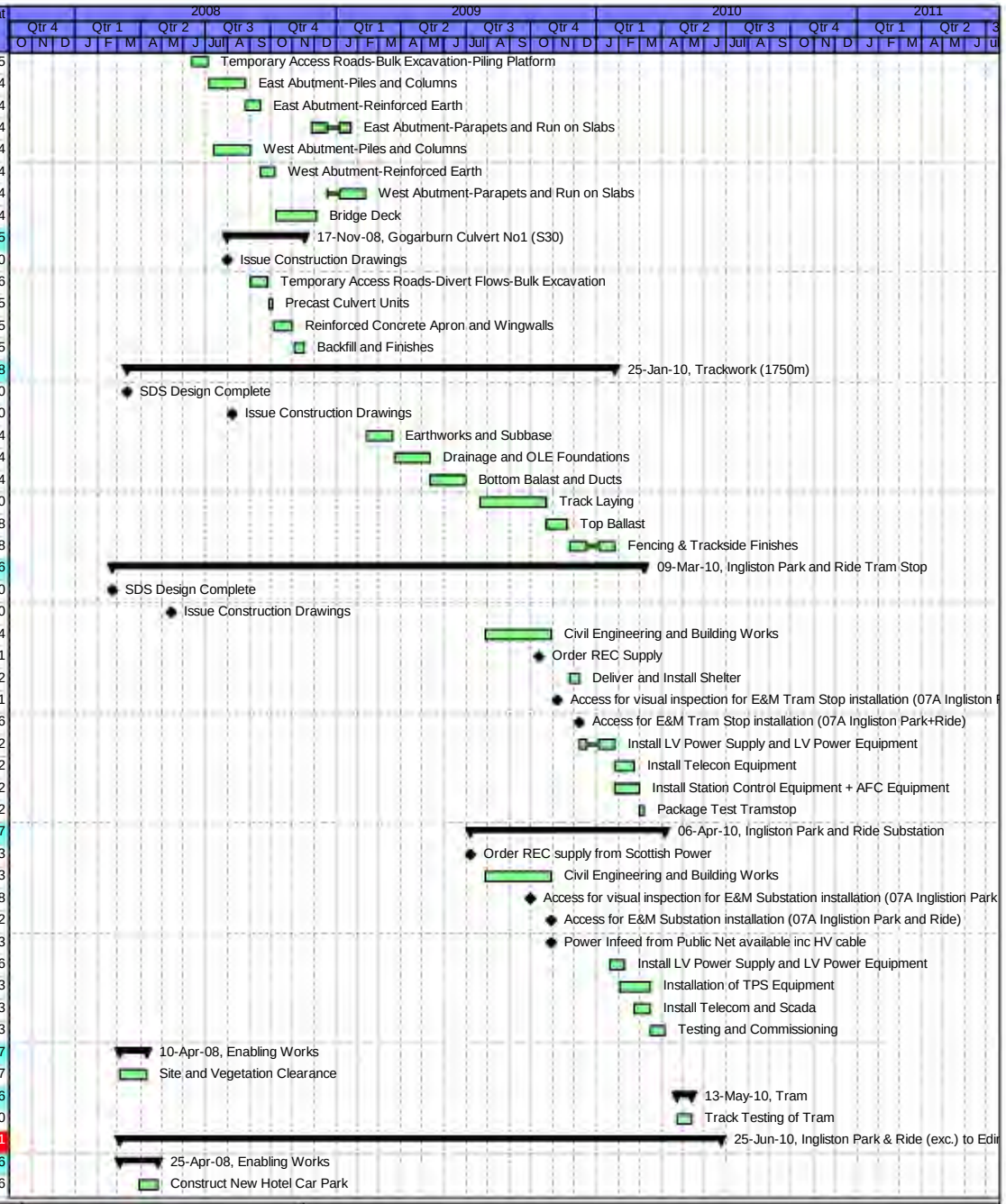

Date	Revision	Checked	Approved
29-Apr-08	Contract Programme 29 April 2008	SCS	

Activity ID	Activity Name	Original Duration	Start	Finish	Total Float
A1930	Site and Vegetation Clearance	28	03-Mar-08	10-Apr-08	267
Gogarburn Retaining Wall (W14)		150	10-Jul-08	23-Feb-09	134
12079	SDS Design Complete	0		10-Jul-08*	0
13080	Issue Construction Drawings	0		19-Sep-08*	0
167	Gogarburn Retaining Wall (W14)	80	20-Oct-08	23-Feb-09	134
Gogarburn Culvert No2 (S31)		95	01-Aug-08	16-Dec-08	173
13090	Issue Construction Drawings	0		01-Aug-08*	0
165	Divert Flows-Bulk Excavation	7	29-Sep-08	07-Oct-08	166
309	Precast Culvert Units	5	08-Oct-08	14-Oct-08	166
319	Reinforced Concrete Apron and Wingwalls	20	03-Nov-08	28-Nov-08	153
329	Backfill and Finishes	11	02-Dec-08	16-Dec-08	173
Gogarburn Culvert No3 (S34)		115	01-Aug-08	27-Jan-09	153
13100	Issue Construction Drawings	0		01-Aug-08*	0
196	Divert Flows-Bulk Excavation	6	08-Oct-08	15-Oct-08	180
279	Precast Culvert Units	5	16-Oct-08	22-Oct-08	180
289	Reinforced Concrete Apron and Wingwalls	20	02-Dec-08	12-Jan-09	153
299	Backfill and Finishes	11	13-Jan-09	27-Jan-09	153
Trackwork (833m)		456	14-Mar-08	25-Jan-10	240
12109	SDS Design Complete	0		14-Mar-08*	0
13110	Issue Construction Drawings	0		07-Aug-08*	0
168	Earthworks and Subbase	15	02-Jul-09	22-Jul-09	45
369	Drainage and OLE Foundations	33	23-Jul-09	08-Sep-09	45
379	Bottom Ballast and Ducts	16	09-Sep-09	30-Sep-09	45
389	Track Laying	30	22-Oct-09	03-Dec-09	30
A1910	Top Ballast	10	04-Dec-09	17-Dec-09	240
A2350	Fencing & Trackside Finishes	17	18-Dec-09	25-Jan-10	240
Edinburgh Airport Tram Stop		555	25-Mar-08	25-Jun-10	261
12069	SDS Design Complete	0		25-Mar-08*	0
13120	Issue Construction Drawings	0		26-Jun-08*	0
169	Civil Engineering and Building Works	65	04-Dec-09	18-Mar-10	124
208	Order REC Supply	0	09-Feb-10		356
A1880	Deliver and Install Shelter	10	23-Mar-10	07-Apr-10	97
A5438	Access for visual inspection for E&M Tram Stop inst	0	08-Mar-10		354
A5439	Access for E&M Tram Stop installation (07A Edingbı	0	07-Apr-10		100
A5440	Install LV Power Supply and LV Power Equipment	25	07-Apr-10	13-May-10	97
A5450	Install Telecon Equipment	20	13-May-:	11-Jun-10	107
A5460	Install Station Control Equipment + AFC Equipment	25	13-May-:	18-Jun-10	97
A5470	Package Test Tramstop	5	18-Jun-10	25-Jun-10	97
A6360	Installation of SIG-interlocking cubicle	10	21-Apr-10	05-May-10	130
A6370	Commissioning of SIG -interlocking cubicle	5	13-May-:	19-May-10	124

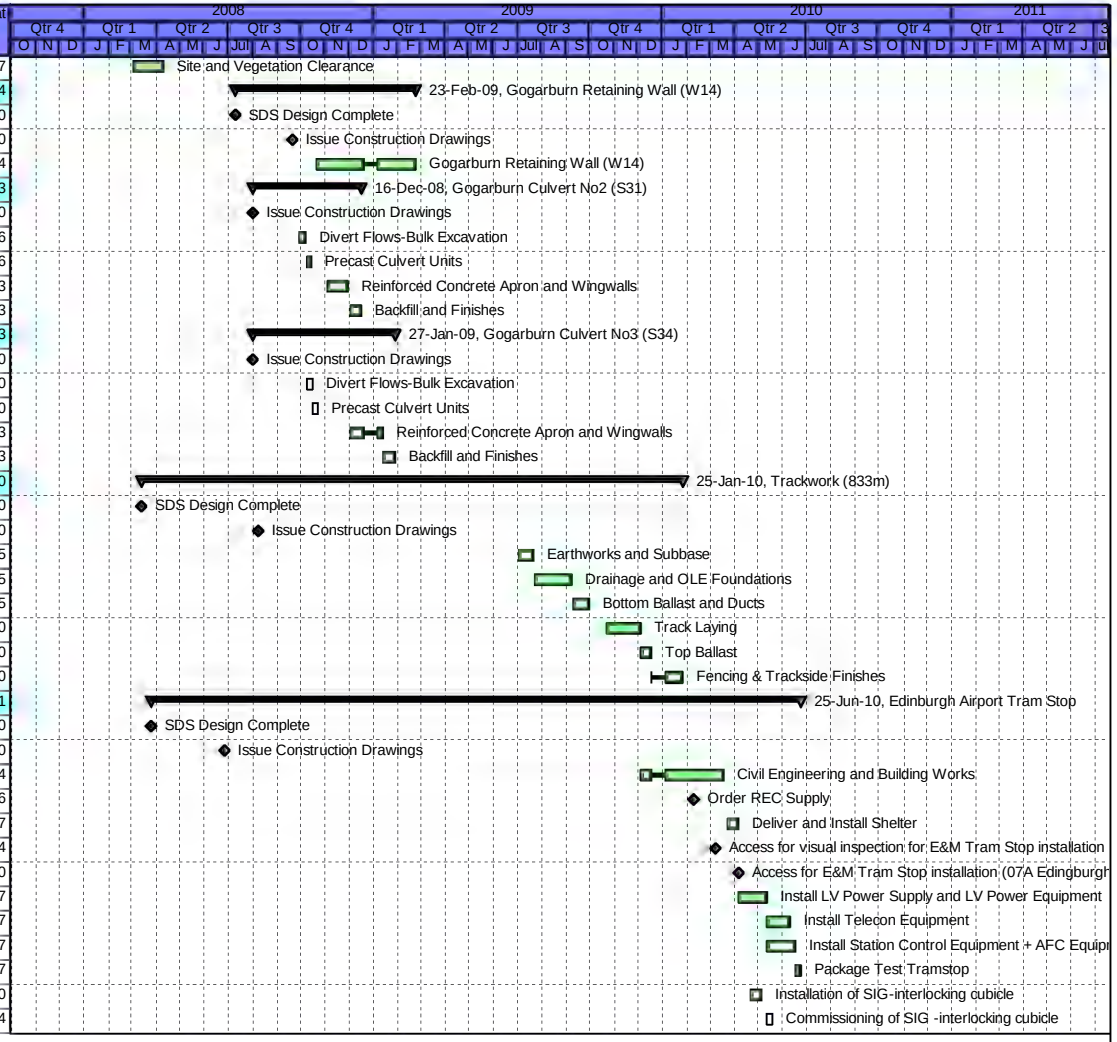

Date	Revision	Checked	Approved
29-Apr-08	Contract Programme 29 April 2008	SCS	

BILFINGER BERGER U. K. Limited

SIEMENS

Programming Assumptions (12 May 2008)

1 GENERAL

1.1Our programme for the works recognises the allowed working hours stated in the Code of Construction Practice of 0700 to 1900 Monday to Friday and 0800 to 1300 on a Saturday. Schedule 15 separately identifies areas where Infraco may make applications for relaxations to the CoCP. General assumptions are as follows

1.1.1 Removal of hedgerows, trees, vegetation and other habitats used by breeding birds will be executed before March 2008, as part of an advanced works contract.

1.1.2 The scope and complexity of the works is as shown on the drawings at 25 November 2007 and detailed in the bill of quantities.

2 DESIGN PROGRAMME

2.1 Version 26 of the SDS design programme has been used to establish milestone dates for the Issue for Construction drawings. We have assumed that there will be no amendments to the SDS design programme. The dates from the following activities have been extracted,

2.2 Substations – There are no dates for the Issue for Construction drawings and it is assumed that the civil engineering and building designs will be Issued for Construction sufficiently in advance of programme so as to ensure that the programme is maintained.

2.3 There are no dates given for the design of the structure that has replaced the A8 retaining wall. We have assumed that the design of this structure will be Issued for Construction as part of the depot earthworks redesign and that this redesign will be completed by the end of April 2008.

2.4 The programme assumes that Issue for Construction information for the Gogar Depot building will be released as required to construct the Depot in accordance with the programme. This will require Issue for Construction in advance of the date shown on version 26 of the SDS design programme.

2.5 Version 26 of the SDS design programme has been used to identify Issue for Construction programme milestone dates that are 4 weeks in advance of the start of construction works on site. It has been assumed that where a longer lead in time is required for items on extended delivery (i.e. bridge beams) that this can be accommodated by advanced information release by SDS.

2.6 It is assumed that where Issue for Construction programme milestones shown against version 26 of the SDS design programme as “letters of completion”, the design is complete. Where no milestone is identified it is assumed that the design is complete.

2.7 The trackwork activities in Section 2A commence on 21 July 2008 as requested by tie to accommodate the revised forecast receipt of Issued for Construction drawings from SDS.

3 MUDFA & UTILITIES

3.1 The programme is based on MUDFA having completed all works and all utilities being diverted that would conflict with INFRACO operations by the following dates;

1A	31 October 2008
1B	01 August 2008
1C	31 October 2008
1D	19 December 2008
2A	16 May 2008
5A	No constraint
5B	11 April 2008
5C	16 May 2008
6	SGN Diversion, 18 April 2008
	Watermain Diversion 30 May 2008
7A	16 May 2008

3.2 No enabling works shall be required to be undertaken by INFRACO before MUDFA (or other Utilities) can complete their works. The programme is based on the Utilities in the Victoria Dock Access Bridge and Tower Place Bridge area being temporarily diverted away from INFRACO works by MUDFA in advance of the INFRACO works.

4 NETWORK RAIL

4.1 The programme assumes that the Bridge beams will be placed at Carrick Knowe Bridge and Edinburgh Park Bridge over the Christmas and New Year period 2008.

4.2 In the other possessions already booked for 2008 we will undertake the following works:

- Site Clearance
- Temporary earthworks support at Carrick Knowe.
- Temporary earthworks support to corner of base at Piers 3 & 4 Edinburgh Park.
- Bunding to protect beam support at Scaffold at Edinburgh Park.
- Temporary Rail protection.

4.3 Further possessions will be required in 2009 to remove crash decks, take down safety fences, erect OLE poles and string catenary wires and the programme assumes that this will be available as required.

4.4 In addition works to be undertaken at the following bridges South Gyle Access, Balgreen Road, Water of Leith, Russell Road and Roseburn Street Viaduct may require to be undertaken

in existing or new possessions depending on the requirements of Network Rail. The programme assumes that these works can be undertaken at such times as enable the programme to be maintained.

5 TRACKWORK

5.1 There is no allowance in the programme for excavation below earthworks outline level for soft spots or more extensive areas of ground improvement.

6 DESIGN/INFORMATION

6.1 There are a number of sections of Phase 1a of the Project where we do not have information that enables us to firm up our programme. The most significant are as follows;

6.1.1 Sub-section 1A, Newhaven to Foot of the Walk

The road and tramway layout is in the process of being changed, we understand to Forth Ports requirements. This also affects the 3 structures in the section, Lindsay Road RW, Tower Place Bridge and Victoria Dock Bridge. We have assumed that Victoria Dock Access Bridge will only require resurfacing. The programme, for the other activities, is based on the information made available by tie for pricing prior to 25 November 2007.

6.1.2 Subsection 1C, McDonald Road to Princes Street West

The junction layouts are being radically changed at London Road and Picardy Place, due to CEC requirements, and a significant vertical alignment change is being made to the North St Andrews St/York Pl junction for tramway alignment reasons. Picardy and York may also involve us in Utility Works. Only provisional activities (called dummy) are included in the programme for these locations. The programme assumes that these activities are no longer in duration than the "dummy" activities shown on the programme.

6.1.3 Sub-section 5A, Roseburn Junction to Balgreen

6.1.3.1 Balgreen Road Bridge and the adjacent Baird Drive and Balgreen Road Walls are being changed to Network Rail requirements. The requirements for one element of the bridge have not been agreed between CEC and Network Rail.

6.1.3.2 Dummy item included in the programme for Balgreen Road. - the programme assumes that these activities are no longer in duration than the "dummy" activities shown on the programme.

6.1.4 Sub-section 5B, Balgreen to Edinburgh Park

Carrick Knowe Railway Bridge is being re-designed (widened) to incorporate a cycleway, CEC requirement. (No time allowance made for widening)

6.1.5 Sub-section 5C, Edinburgh Park to Gogarburn

6.1.5.1 A dummy programme item of 20 days has been allowed for supporting and working around the large bank of BT ducts which conflict with the A8 underpass construction. The Base Date Design Information for the A8 underpass does not cater for the large BT duct (above) and the large diameter sewer (below) which prevent the secant (or contiguous) piled wall design from working where these two services intersect the line of the structure. Whilst it is recognised that the resolution of this problem will have an impact on the programme, the programme allows only

a duration of 20 days, as noted above, for the impact of the works required to resolve the BT duct problem.

6.1.5.2 The Depot Access Bridge is being re-designed (dummy item added). The programme assumes that this activity is no longer in duration than the "dummy" activity shown on the programme.

6.1.6 Sub-section 7A, Gogarburn to Edinburgh Airport

Due to the cancellation of EARL, the vertical alignment of the Tramway, 3No Culverts and 2No Walls at the Airport Tramstop are being changed. (No allowance for these changes has been made and the programme assumes that there will be no impact).

7 OLE DESIGN

7.1 The programme milestone for OLE design to commence (i.e. SDS issue Issue for Construction track alignment drawings) includes the receipt by the Infraco of the following information sufficient to allow construction in accordance with the programme:

7.1.1 Complete and approved track alignment in data format.

7.1.2 Other structures and Utilities data.

7.1.3 tie decision re OCS system in City Centre.

7.1.4 Complete and approved vehicle data.

7.2 That approval of the OLE design is not required prior to Issue for Construction of the OLE foundation design (i.e. no approval periods have been allowed in the logic SDS issue track alignment drawings – Siemens design OLE – SDS design OLE foundations – OLE foundation construction).

7.3 That approval of the OLE design is not required prior to Issue for Construction of the OLE building fixing design (i.e. no approval periods have been allowed in the logic SDS issue track alignment drawings – Siemens design OLE – SDS design building fixings –Siemens OLE installation).

8 DESIGN STAGE AND TIE CONSENTS

8.1 The programme assumes that tie will timeously obtain the relevant TTRO's and TRO's to allow the necessary traffic management for the construction and operation of the tram respectively.

8.2 The programme also assumes that all third party consents will be granted to allow works to proceed in accordance with the logic and timescales shown.

9 MAIN PROGRAMMING ASSUMPTIONS

9.1 Further assumptions upon which the programme is based are as follows:

9.1.1 Relaxations on City Centre Constraints are required which could be subject to full CEC approval. The programme assumes that such relaxations shall be permitted so as to ensure that the programme is maintained as identified in Schedule 15.

9.1.2 tie shall accept that commissioning shall commence (on the date shown on the programme) prior to the completion of the Picardy Place Roadworks.

9.1.3 That there shall be no slippage in the MUDFA programme.

9.1.3 That there shall be no slippage on the SDS programme.

9.1.4 That the SDS design will allow road construction by planing the existing surfacing to underside of new surface course and laying the new surface course.

9.1.5 The only programming constraint imposed by the Scotrail Depot at Haymarket is that Roseburn Street Viaduct cannot commence until the oil tanks have been relocated. For the avoidance of doubt, the relocation of the oil tanks only, will be deemed to be delayed if such relocation is not completed by the date on the Programme regardless of the date noted in Schedule Part 26, tie Obligations, for the same activity.

9.1.6 Construction of the trackwork to the Guided Bus Way will commence in November 2008.

10 COMPLETION

10.1 The current version of the programme completes Airport to Haymarket in May 2011, Haymarket to Newhaven in July 2011.

EDINBURGH TRAM PROJECT
Proposed Schedule of Works to Seek Dispensation from CoCP

Category	Item	Status	Comments
On – Street Track Works	Establish Traffic Management - only as justified - exception rather than the rule	Agreed with comments	Only where justified and agreed. Should be the exception rather than the rule
On – Street Track Works	Delivery of Rails	Agreed	
On – Street Track Works	Cross carriageway ducts.	Agreed with comments	This is to tie in central track ducts to existing drainage/ducts agreed for difficult access & exceptions
On – Street Track Works	Cross carriageway drains	Agreed with comments	This is to tie in central track ducts to existing drainage/ducts agreed for difficult access & exceptions
On – Street Track Works	Tie ins for road surfacing (Planing and Surfacing)	Agreed	
On – Street Track Works	Erection of street lights	Agreed with comments	Agreed for modifications to existing layouts. New build to be done under CoCP
On – Street Track Works	Erection of traffic signals.	Agreed with comments	Agreed for modifications to existing layouts. New build to be done under CoCP
On – Street Track Works	Permanent road markings	Agreed with comments	At major road junctions or area's of difficult access
On – Street Track Works	Rail tie ins at road junctions	Agreed	
On – Street Track Works	Building fixings for OLE	Agreed with comments	For erection of equipment and/or OHL only and not for the actual drilling/fitting of fixings
On – Street Track Works	OLE Columns	Agreed with comments	Only for area's of difficult access
On – Street Track Works	Stringing Catenary Cables.	Agreed with comments	Only for area's of difficult access
On – Street Track Works	Pulling comms and power cables.	Agreed with comments	Only for area's of difficult access
On – Street Track Works	Applying mastic seal to rail edges.	Agreed with comments	Should be the exception rather than the rule
On – Street Track Works	Removing Traffic Management.	Agreed with comments	Should be the exception rather than the rule
On – Street Track Works	Delivery of Tram Stop Shelters and other large equipment.	Agreed	
On – Street Track Works	Work activities in Constitution Street where access is very restricted	Agreed with comments	Only to provide / facilitate for special 3rd party access or similar
Depot	Works necessitated due to possible restrictions on craneage etc enforced by British Airports Authority.- agreed	Agreed	
Works Associated with Network Rail	All works that by the nature of their proximity to the Network Rail Tracks require Possessions to undertake.	Agreed	
A8 Subway	Establish traffic management- agreed	Agreed with comments	In agreement with BAA as there may be restrictions on lighting at night as emergency runway will be in use when main runway is resurfaced.
A8 Subway	Mobilise and demobilise piling rigs- agreed	Agreed with comments	In agreement with BAA as there may be restrictions on lighting at night as emergency runway will be in use when main runway is resurfaced.
A8 Subway	Installation and removal of temporary sheet piles which provide temporary support to the carriageway.- agreed	Agreed with comments	In agreement with BAA as there may be restrictions on lighting at night as emergency runway will be in use when main runway is resurfaced.
A8 Subway	Tie ins for road surfacing (Planning and Surfacing)- agreed	Agreed with comments	In agreement with BAA as there may be restrictions on lighting at night as emergency runway will be in use when main runway is resurfaced.
A8 Subway	Permanent road markings- agreed	Agreed with comments	In agreement with BAA as there may be restrictions on lighting at night as emergency runway will be in use when main runway is resurfaced.
A8 Subway	Removing Traffic Management.- agreed	Agreed with comments	In agreement with BAA as there may be restrictions on lighting at night as emergency runway will be in use when main runway is resurfaced.
General	Dewatering Excavations.	Agreed with comments	By exception
General	Maintenance of Traffic Management.	Agreed with comments	As and when required in response to defects
General	Site Safety. Please provide more details	Agreed with comments	In response to an incident or a planned monitoring activity
General	Completion of concrete pours (power floating etc of bridge decks).	Agreed	
General	Erection of bridge beams, crash decks etc over roads (South Gyle Access, Roseburn Street, Balgreen Road etc.)	Agreed	
General	Works that need to be completed outside normal working hours as a result of Third Party Agreements	Agreed	
General	Movement of Plant and Machinery. - by exception	Agreed with comments	By exception
General	Delivery of abnormal loads.- agreed	Agreed	

EDINBURGH TRAM PROJECT
Proposed Schedule of Works to Seek Dispensation from CoCP

Category	Item	Status	Comments
General	Connection of power and telecomm outside peak times or due to the availability of outages.	Agreed	
General	Testing and commissioning of sub-stations. - by exception	Agreed with comments	By exception
General	Testing and commissioning of Trams to avoid traffic problems in case of a breakdown or systems failure.	Agreed with comments	By exception or for specific testing requirements / situations. Not for general training
General	Signal and system integration testing operations. - by exception depending on test	Agreed with comments	By exception depending on test requiremetns
General	Works adjacent to the guided bus route which would cause disruption during peak times.	Agreed	
General	Works which are programmed but cannot be carried out without causing disruption to City festivals and events. Examples?	Agreed with comments	Specific or unknown events only. Not known embargos or identified events at 28Feb08
General	Road works and footway works that would affect access points to business premises, distribution centres etc.	Agreed with comments	Not as the norm. by exception only

EDINBURGH TRAM PROJECT

On-Street Construction Methodology

Construction Methodology and proposals Based on Design Available to December 2007 and to be confirmed by Detailed Design

INDEX

Introduction 4
General 4
Code of Construction Practice 5
Site Specific CoCP 5
Embargo's 6
ON –STREET CONSTRUCTION METHODOLOGIES 7
Haymarket Junction 8
General 11
Palmerston Place / Torphicen Junction to Manor Place 12
West Maitland Street Junction with Palmerston Place/Torphicen Street 13
Shandwick Place (Full Closure) 14
Lothian Road Junction 15
Princess Street (East – Central – West combined) 16
Princess Street (Mount Junction) 17
Waverley Bridge Junction 17
St.Andrew Square 18
York Place 19
Picardy Place 19
London Road Junction 19
Leith Walk (South) 20
Leith Walk (North) 20
Foot of the Walk 21
Constitution Street (South)- Closure 21
Constitution Street- Closure 22
Constitution Street (North)-Closure 22
Ocean Drive 22
Victoria Quay Roundabout 23
Lindsay Road to Newhaven 23
A8 Underpass 24
A8 Underpass / Guided Busway Interface 26
Attachment 1 27
Attachment 2 28

Introduction

This document has been prepared to provide a summary view of the documentation that has been used and decisions that have been made to agree the construction methodology primarily for Edinburgh Tram Infraco Construction Works that are to take place in the City Centre (Haymarket to Newhaven) but also for two recognised areas outwith the city centre being the interface between the A8 Underpass construction at the Gogar Roundabout and the construction activities to the existing guided busway.

This document refers to may separate sketches and drawings that have been reviewed and discussed in some detail by not only **tie** and the Infraco Constructor (**BBS**) but also with major stakeholders such as CEC, TEL and Lothian and Borders Police.
All referenced drawings and sketches are available under separate cover.

General

1. Queen Street – George Street – Princes Street have to be recognised as the "cornerstone" of any traffic management proposals and should be used as the foundation to build traffic management solutions from.

2. CEC advised that as there are only 3 recognised North – South routes through the city being :
    a. Princes St. – Lothian Rd.
    b. Through Mound junction
    c. Picardy place – Leith St. North Bridge

    and that only one of these thoroughfares can be closed at any given time and this constraint must be recognised during INFRACO programme development.

3. **tie** advised that any temporary traffic management deemed necessary will be input to the traffic modelling software by JRC.

4. Identification required by INFRACO of other works off the tram route that may be required to facilitate Traffic management i.e. removal of existing traffic calming measures, tree lopping, parking restrictions, signage etc.

5. Colour coded route map for on-street section referred to during discussions has been scanned and made available to all. (Attachment 1)

6. The constraints matrix (issued previously) is also colour coded to match map. The route map if reproduced for 3rd parties are not to be issued greater then A3 size. (Attached)- This has been superseded by the 'relaxation' of city centre constraints as detailed in the following pages. (Attachment 2)

7. BBS to consider in all proposals the requirement to service both business and private premises and required access to bus stops. BBS initial response is that servicing or business premises may have to be done outwith construction hours.

8. All proposals discussed are utilising CoCP hours only.

9. There are three areas have been recognised as full closure, due to considerable reduction on programme duration. (Shandwick place, Princess street and Constitution street)

Code of Construction Practice

The agreed Code of Construction Practice (CoCP) limits the working hours available as follows

Monday to Friday 7am-7pm
Saturday 8am-1pm

Any requirement to work outside of the COCP will have to be identified and an application made to CEC well in advance of the requirement.

Site Specific CoCP

Site Specific Code of Construction Practices exist for the area's listed below which have to be recognised and adhered to during Infraco Construction works.

1. Porth Ports
2. Ocean Terminal
3. Royal Yocht Brittania
4. BAA
5. SRU
6. Edinburgh Park
7. Network Rail
8. Others

{ XE "Code of Construction Practice" **}**

Embargo's

August Festival

August festival restriction period will run annually from the 1st Sunday in August to the 1st Sunday in September inclusive.

Christmas

From the Thursday preceding the first Sunday in December until the first working day of the New Year annually

Limits

Haymarket to Picardy Place

ON –STREET CONSTRUCTION METHODOLOGIES

Haymarket Junction

Limits

Frontage of Caley Ale House with Haymarket Station to West side of Palmerston Place (includes left turn into Plamerston Place)

Agreement

Phase 1 Drawing SK-TM-001

1. BBS confirmed that subject to being able to maintain acceptable pedestrian crossings that the 2 lane flow of traffic exiting Dalry Road into West Maitland Street would be maintained by"skewing" across the junction into West Maitland Street by building-up the east end of the existing pedestrian Island to the north of Ryries public house. BBS to confirm what works will be required to accommodate this and to update their proposals / drawings.

2. BBS confirmed that the Storage area 1b proposed for the north side of Morrison Street could be relocated to the south side of West Maitland Street to assist with traffic flows in Morrison street.

3. BBS confirmed that the fence line designating the working area around the existing East Island outside the Haymarket Bar would reduce traffic flow from Morrison Street into West Maitland Street to one lane.

Phase 2 Drawing SK-TM-002

1. BBS confirmed that with the East Island removed in Phase 1a that a 2 lane flow will be re-instated from Morrison Street into West Maitland Street.

Phase 3 Drawing SK-TM-003

1. BBS proposal to relocate bus stop from outside Ryries Bar to West End of Haymarket Terrace and build-up in the West end of the Scotrail Carpark adjacent to existing Air Quality Monitoring station to provide a standing area for bus passengers is agreed.

2. BBS proposal to relocate bus stop from outside Haymarket Station forecourt to West End of Haymarket Terrace and build-up in the West end of the Scotrail Carpark adjacent to existing Air Quality Monitoring station to provide a standing area for bus passengers agreed.

3. CEC to advise on situation with relocation of taxi rank from Haymarket Station carpark.

4. BBS to submit proposals for enabling works in Station forecourt

5. Caley Ale House - Demolition re-programmed from August 2008 to April 2008 following re-sequencing of programme to work from Haymarket into city centre. (Licence to vacate expires 31/3/8).

6. Junction Construction - Westbound traffic from Morrison Street to Haymarket Terrace will be reduced to one lane along the front of Ryries Bar / Haymarket Station.

7. Junction Construction - BBS to submit Traffic Management proposals for diverting general eastbound traffic from Haymarket Terrace into the surrounding streets (Coates Gardens or Rosebery Cresent) and exiting further up West Maitland Street, whilst maintaining a single bus lane eastbound through Haymarket junction and having a single westbound lane on Haymarket Station (South) side.(Applies to Phases 5 & 6 also)

Phase 4A Drawing SK-TM-004

1. Bus stop outside Haymarket station will be relocated during Phase 3 above

2. Taxi rank in station forecourt will be moved during Phase 3 above

Phase 4B Drawing SK-TM-005

1. Bus stop outside Haymarket station will be relocated during Phase 3 above

2. Taxi rank in station forecourt will be moved during Phase 3 above

Phase 5 Drawing SK-TM-006

1. BBS to submit Traffic Management proposals for diverting general eastbound traffic from Haymarket Terrace into the surrounding streets (Coates Gardens or Rosebery Cresent) and exiting further up West Maitland Street, whilst maintaining a single bus lane eastbound through Haymarket junction and having a single westbound lane on Haymarket Station (South) side (As per Phase 3)

2. Proposed diversion route for Westbound traffic through existing Haymarket station forecourt will require enabling works. (As per phase 3)

3. This phase requires Caley Ale House to have been demolished and would assist the construction to have continued junction section off-road and build the first part of Haymarket Viaduct through the Caley footprint. BBS to programme accordingly.

4. Programme logic to be checked to interface with Haymarket Terrace sub-station.

Phase 6A/6B Drawing SK-TM-007

1. BBS to submit Traffic Management proposals for diverting general eastbound traffic from Haymarket Terrace into the surrounding streets (Coates Gardens or Rosebery Cresent) and exiting further up West Maitland Street, whilst maintaining a single bus lane eastbound through Haymarket junction and having a single westbound lane on Haymarket Station (South) side (As per Phase 3)

2. TEL raised concerns on the temporary reduction of Dalry Road northbound to one lane and the impact of stationary buses. BBS requested to review potential to have 2 lanes running northbound on Dalry Rd towards West Maitland Street with the existing 2 lanes from Morrison Street southbound to Dalry Road reduced to one. BBS to update proposal.

3. BBS to advise on proposals for maintaining safe pedestrian access to the frontage of Haymarket Station.

General

1. BBS to advise proposals for ensuring pedestrian access and safety across Haymarket junction during construction period as central islands will be removed.

2. BBS to consider options during Programme Development and submit proposals for diverting traffic away from the A8/Haymarket and on to other approach routes into the city to ease congestion prior to Haymarket area construction.

3. Temporary Traffic Management design is responsibility of BBS and must consider such items as servicing of premises and through-routes for emergency vehicles etc

Palmerston Place / Torphicen Junction to Manor Place

Limits

West Maitland Street (West Side of Palmerston Place (excluding left turn into Palmerston Place) to West side of Manor Place (includes left turn in Manor Place)
West Maitland Street to Torphicen Place/Manor Place

Agreements

Jnc 81 Layout Drawing Phase's 1-2-3

1. BBS proposal is to reduce existing 4 lanes to 2 only eastbound to allow for a sufficient working area. Diversion strategy is a continuation of that adopted for Haymarket junction i.e. divert general eastbound traffic from Haymarket Terrace into the surrounding streets (Coates Gardens or Rosebery Cresent) and exiting further up West Maitland Street.

2. BBS confirmed that the right turn is retained from West Maitland into Torphicen Place.
   Proposal agreed in principal with BBS-CEC-TEL-L&BP subject to confirmed design dimensions and agreement of further detailed traffic management. See attached layout drawings.

3. CEC advised that Torphicen Street becomes 2 way in the final scheme with 2 lanes heading south and 1 lane heading north across the junction and into Palmerston place. BBS unaware of this design and the associated kerb re-alignments.
4. A north/south flow from Palmerston place to Torphichen street to be maintained during the construction of section 1d. This junction will be re-visited at the completion of the rest of section 1d to complete the construction of this section.

West Maitland Street Junction with Palmerston Place/Torphicen Street

Limits

West Side of Palmerston Place Junction on West Maintland Street to East side of Junction with Torphicen Street

Agreements

Shandwick Place (East side of Manor Place to West Side of Queensferry Street)
East Side of Manor Place to entrance to Coates / Atholl Crescents
Jnc 79 & 80 Layout Drawing Phase's 1-2-3

1. Following lengthy discussion it was agreed to merge Phase's 2 and 3 as shown to close the junction between Manor Place and West Maitland Street with traffic diverted down Palmerston Place.

2. Proposal agreed in principal with BBS-CEC-TEL-L&BP subject to confirmed design dimensions and agreement of further detailed traffic management. See attached layout drawings.

3. Existing road width is proving challenging to fit in a construction zone, a safety zone and maintain a traffic flow. BBS requested a x-section of the road.

4. Noted that if the revised Haymarket junction is constructed first then that would reduce Traffic Management challenges on Shandwick Place.BBS to consider in programme development.

5. Identified that the permanent measure could prove problematic as in the example of Shandwick Place there would be a centre island tram stop constructed whilst still maintaining two-way traffic flow prior to the permanent TRO approval, and that a further TTRO may be required to divert traffic away from this area. Needs to be considered for all areas.

Shandwick Place (Full Closure)

Limits

East side of Manor Place to West Side of Queensferry Street ,Entrance to Coates / Atholl Crescents to Lothian Road Junction

Agreements

No Construction methodology drawings yet developed for this section

1. Noted that if the revised Haymarket junction is constructed first then that would reduce Traffic Management challenges on Shandwick Place. BBS to consider in programme development.

2. Proposal is to close Shandwick Place and divert all traffic in both directions through Coates and Atholl crescents. Proposal agreed in principal with BBS-CEC-TEL-L&BP subject to submitted drawings, confirmed design dimensions and agreement of further detailed traffic management.

3. Identified that the permanent measure could prove problematic as in the example of Shandwick Place there would be a centre island tram stop constructed whilst still maintaining two-way traffic flow prior to the permanent TRO approval, and that a further TTRO may be required to divert traffic away from this area. Needs to be considered for all areas.

Lothian Road Junction

Limits

Junction between Lothian Road / South Queensferry Street/ Hope Street / Princess Street to east side of South Charlotte Street junction

Agreements

Lothian Road Junction

Jnc 72 & 70 Layout Drawing Phase's 1-2-3-3a-4

1. Proposal agreed in principal with BBS-CEC-TEL-L&BP subject to confirmed design dimensions and agreement of further detailed traffic management. See attached layout drawings. Enabling works required
    a. Opening the junction between Shandwick place / Queensferry Street/Hope Street (Fraser's Corner) and creating a gyratory in a clockwise direction. Will be done to some extent by MUDFA.
    b. The pedestrian flow across the Fraser's corner junction must be accommodated.

2. L&BP raised a concern with the potential for traffic performing a U-turn on the east side of Charlotte Square to access George Street.

3. Initial discussions took place around traffic management at Princes St, South Charlotte St, Charlotte Sq, Hope St. with the intention of introducing a virtual roundabout situation with traffic on Princes St running on the north side of Princes Street only between South Charlotte Street and Lothian Road junction. This would need enabling works to open the junction between Shandwick place / Queensferry Street/Hope street (Fraser's Corner)

Lothian Road junction to Princes St/South Charlotte St.

1. CEC advised that road alignment has changed from that shown on the drawings with BBS.

2. CEC advised that the pedestrian flow across the Fraser's corner junction in both east/west and north/south directions must be accommodated.

3. Issue whether or not re-profiling is required to Princes Street road surface and to what extent. Current design required.

4. Noted that once left turn is incorporated from South Charlotte St. to Princes St. eastbound that this will be for buses and taxis only.

5. 3 lanes running south in South Charlotte Street to be configured so that 2 lanes turn right into Princes Street for Lothian Road/Shandwick Place / Queensferry Street and 1 lane turns left into Princes Street for bus/taxi traffic only-Post construction

6. Phase 3 as shown on attached drawings can only be completed if existing road dimensions are sufficient. Await design details.

Princess Street (East – Central – West combined)

Limits

East Side of South Charlotte Street to the mid point of the Waverley bridge / Princes Street junction

Princes St. West Agreements

East side of South Charlotte Street to West Side of The Mound
East Side of South Charlotte Street to mid Fredrick Street Junction

Options Discussed:

Layout Drawing Phase's 1-2-3-4

1. Fredrick Street scheduled to be re-opened by MUDFA under St.Andrew Square programme by mid February 2008.

2. Princes Street Central Reservation may be removed by MUDFA prior to BBS requiring site.

3. A single phase between South Charlotte Street and Fredrick Street would remove up to 4 bus stops. TEL requested that this section be reviewed to terminate at the mid point of the Fredrick Street junction thus enabling a 2-way flow to be retained during both this and the following phase.

4. BBS were requested to submit proposals to split Princes St. into 3 phase's being
    a. East Side of South Charlotte Street to the mid point of Fredrick Street junction.
    b. Mid point of Fredrick Street junction to Mid point of the Mound Junction.
    c. Mid point of the Mound Junction to Waverley Bridge / South St.Andrew Street junction

5. BBS to be able to demonstrate the benefits to programme of this logic.

6. BBS proposal to split Princess Street into only 2 phase's
    a. East Side of South Charlotte Street to the mid point of Mound junction.
    b. Mid point of Mound junction to Waverley Bridge / South St.Andrew Street junction.

7. BBS to submit proposals with examples of how this would benefit programme and costs.

8. TEL have requested that if possible 2 lanes are retained in a westerly direction. BBS advised that the required width incorporating 2 lanes of traffic, working zone and safety zone may not be available. To be confirmed.

9. BBS indicated that complete closure had not been considered in their programme submission and that significant programme duration reduction would be expected in this area. Programme to be updated.

10. BBS requested that design x-sections of the road construction be made available.

Princes Street Agreement

Due to significant programme duration reduction made after the complete closure option exercise, it has been reprogrammed with complete closure of Princes street (from the east side of South Charlotte Street to the mid point of the Waverley bridge / Princes Street junction) whilst maintaining a single lane north-south flow across the Mount Junction under traffic light control.

Princess Street (Mount Junction)

Limits
Mound Junction

Mound Junction Agreements

Jnc 67 Layout Drawing Phase's 1-2-3-4-5-6-7-8

1. Current Proposal is to re-open Fredrick Street and move north/south traffic from Hanover Street to Fredrick Street. Construction will reduce traffic lanes to 1 lane westbound and 2 lanes eastbound. (This proposal assumes bus traffic remains on Princes St.)

2. Fredrick Street requires to be re-opened to traffic sooner rather than later to facilitate both MUDFA and INFRACO works. (Post mtg note – this requires to be done by end January 2008 to facilitate MUDFA works in St.Andrew Square

Waverley Bridge Junction

Limits

East end Princes Street at Junction with South St Andrew Street and Waverley Bridge

Jnc 49-50-53-63-66 Layout Drawing Phase's 1-2-3-4-5-6-7-8

1. Concern on amount of time in construction programme to construct this junction curve (37 days) due to complexity of traffic management issues. This has been resolved with the proposal of 3 phase construction discussed at meeting 6th Nov. and included in Construction methodology drawing pack received 12th Nov. under which the junction is now closed to all traffic thus providing a secure construction environment.

St. Andrew Square

Limits

North St Andrew Street to South St Andrew Street excluding junction York Place / North St Andrew Street and junction Princes Street / South St Andrew Street

Agreement:

1. East side of the Square will be closed to traffic by the time BBS require to construct in this area. BBS need to consider servicing of premises during construction.

2. If the re-profiling of road surface on South St.David Street currently being done as part of MUDFA works was continued through the left turn junction onto Princes St. (eastbound) then this would greatly assist traffic management proposals for Infraco. To be considered in MUDFA programme.

North St.Andrew Street to York Place Junction

Limits

Junction York Place / North St Andrew Street

Agreements

1. BBS unaware of any design associated with build-up of road levels at junction and require understanding of current design for this area. No information can be found in the data room indicating that this junction has to be built-up by around 500-600mm.

2. BBS were advised that this is an area where utilities may be left for Infraco.

3. BBS advised that to construct this junction the westbound left turn from York Place into North St.Andrew St would have to be banned. This will already have been done under MUDFA works.

4. BBS suggested diverting traffic through Herriot Row / Abercromby Place but after some discussion this was deemed unworkable.

5. Princes Street could be used as a diversion route to take traffic of York Place if Princes St construction programme could be completed first. BBS to consider in programme development.

6. Previous proposal to divert southbound traffic from Leith Walk to Leith Street and Princes Street was deemed unworkable by both TEL and L&BP as Leith Street already operating at capacity.

7. Issue is that major engineering works are required at this junction and traffic will have to be thinned-out by other diversions prior to reaching this location. Wider area diversion strategy required as mentioned above.

York Place

~~Limits~~

York Place from junction with North St Andrew Street to junction with Picardy Place/Broughton Street but excluding both of these junctions

~~Agreements~~

1. Access to Bus station at Elder street junction will require access to be maintained at all times. To be included in proposals.
2. Preferred option is two retain 2 lanes of traffic in one direction with the opposite flow diverted to a location yet to be decided.

Picardy Place

~~Limits~~

Between Picardy Place roundabout at its junctions with Broughton Street and Leith Street and London Road roundabout

1. CEC advised that the T-Junction proposal is being taken forward. SDS are currently working-up TSS initial design so that a “fixed” conceptual design will be available in December to allow BBS to programme and cost.

2. tie (D.Sharp) provided a draft of the final design and talked through with BBS. A copy of the draft layout plus a copy of the original layout incorporating Utilities was provided to BBS for information only. See attached. Formal issue expected later this week. Dwgs. B13703/SK/27 and B13703/SK/28

London Road Junction

~~Limits~~

London Road with its junctions to Leith Walk south and Leith Street

~~Agreement~~

1. CEC advised that this is now a T-junction design and has been for some time. Current design to be confirmed to BBS.

2. Understood that under MUDFA that the existing roundabout and clock would be removed this year. To be confirmed. (Post meeting note – removal of roundabout underway and clock to be removed to CEC storage w/c 19th Nov.2007)

Leith Walk (South)

~~Limits~~

Leith Walk (South) – Junction at London Road to Balfour Street

~~Agreement~~

1. Dalmeny Street and Iona Street cannot be closed together as each is a diversionary route for the other.

2. Pilrig Street and MacDonald Road cannot be closed together as each is a diversionary route for the other.

3. Bus movements between Elm Row and Annandale Street are critical. Provided MacDonald Road and Hopetoun Street are accessible then diversions northbound only could be accommodated between the hours of 08:00 and 18:00.

4. Southbound from Annandale Street to Elm Row is needed at all times.

5. Potential for TRO impact on permanent measures to be considered during programme development.

6. Proposal agreed in principal with BBS-CEC-TEL-L&BP subject to confirmed design dimensions, submitted drawings and agreement of further detailed traffic management. BBS to submit drawings to support proposal.

Leith Walk (North)

~~Limits~~

Leith Walk (North) – Junction Balfour Street to just South of Foot of the Walk junction with Great Junction Street

~~Agreements~~

Potential for TRO impact on permanent measures to be considered during programme development.

Proposal agreed in principal with BBS-CEC-TEL-L&BP subject to confirmed design dimensions, submitted drawings and agreement of further detailed traffic management. BBS to submit drawings to support proposal

Foot of the Walk

~~Limits~~

Foot of the Walk / Great Junction Street / Constitution Street / Duke Street Junctions

~~Agreement~~

1. Existing pedestrian crossings and associated signalling moved back into Duke Street, Great Junction Street, Leith Walk, Constitution St away from the junction.

2. Construction at south end of constitution street is extended as far south into Great Junction St junction as practically possible.

3. Traffic management in a East/West direction is reduced to one lane over the already built section in 2 above south of constitution st and a L-shape construction is done incorporating remaining 2/3rds of Great Junction Street and ½ of Leith Walk.

4. Traffic management in a East/West direction is reduced to one lane over the already built section in 2 above south of constitution st and a L-shape construction is done incorporating remaining 2/3rds of Duke Street and ½ of Leith Walk.

5. Proposal agreed in principal with BBS-CEC-TEL-L&BP subject to confirmed design dimensions, submitted drawings and agreement of further detailed traffic management. BBS to submit drawings to support proposal.

Constitution Street (South)- Closure

~~Limits~~

Constitution Street north of junction with Great Junction St/Duke Street to North side of Queen Charlotte Street (includes junction)

~~Agreement~~

Due to permanent TRO constraints the works in constitution street should be programmed so that they are not completed until after the TRO is in place. BBS to consider during development of programme

Constitution Street- Closure

Limits
Constitution Street north of junction with Queen Charlotte Street to south side of junction with Baltic Street / Bernard Street

Agreement

Due to permanent TRO constraints the works in constitution street should be programmed so that they are not completed until after the TRO is in place. BBS to consider during development of programme.

Constitution Street (North)-Closure

Limits

Constitution Street north of junction with Baltic Street / Bernard Street to roundabout at Casino Square

Agreement

Due to permanent TRO constraints the works in constitution street should be programmed so that they are not completed until after the TRO is in place. BBS to consider during development of programme.

Ocean Drive

Limits
Ocean Drive from roundabout at Casino Square to Junction with Lindsay Road including Victoria Quay Roundabout

Agreement

Casino Square
Roundabout is removed and essentially becomes a T-junction.

Ocean Drive

1. Tower Place Bridge – Clarity required on whether or not an additional footway is required. Bridge is to be widened.

2. CEC advised that their understanding is that the CoCP will be agreed with Forth Ports w/e 16th November and that CEC will be adopting the road therefore becoming the owners.

3. Casino Square to Ocean Terminal – BBS understood that the alignment in this section was in the verge only moving into the roadway to cross Tower Place and Victoria Dock bridges. CEC advised that the alignment in this section is in the centre of the road.

4. CEC also adopting the section in front of Ocean Terminal upto Ocean Drive West

5. Temporary road to be built through existing blaes carpark incorporating part of existing road. BBS to incorporate in programme logic.

6. Access must be maintained to carpark at North end of Ocean Terminal at all times. BBS to incorporate in programme logic.

7. Constraints expected outside of Ocean Terminal to be advised

Victoria Quay Roundabout

Becomes a T-junction in the permanent measure with controlled pedestrian crossing. This conflicts with the design BBS currently have. Data room to be checked for correct design.

Lindsay Road to Newhaven

~~Limits~~
Lindsay Road at junction with Ocean Drive to Newhaven Road

~~Agreement~~

This section is currently under re-design as there is an expected change to the alignment. This is also a section where MUDFA and INFRACO may work in parallel as the road levels may be changed by up to 2m.

A8 Underpass

Agreement

- BBS used AIP report as a basis as was a very detailed report on design, construction methodology and associated traffic management.

  The change to design criteria around the A8 retained wall (soil nailing rather than contiguous piles) now means that the wing walls are now stand-alone structures rather than as previously when they were part of the A8 contiguous piled wall.

- Phase 1 (North Side)
  The traffic management associated with this will see the closure of the near-side lane (eastbound) on the Gogar roundabout and one lane of the current eastbound (city bound) slip road from the Gogar roundabout closed-off using a physical TVCB (temporary vehicle control barrier).

  Once the traffic management is in place construction will commence on the North side with a top down dig to allow enough spoil to be removed to allow the construction of the first part of the tunnel roof soffit. A base layer will be put in place and timbered over which will allow the first section of the tunnel roof to be cast.

  2 rows of piles have to be driven in a north-south direction leading into the north access to the tunnel. This will be supported by east-west sheet piling to ensure integrity between the worksite and the traffic lane.

  Following completion, the road surface will be re-instated.

- TEL commented that the need for cross-over flows from the slip road to city bound lanes and from the A8 under the roundabout to Leith bound lanes needs to be maintained as well as considering the impact of stacking in the slip lane onto the roundabout itself.

- tie proposed the use of temporary traffic lights to control the merge across lanes with temporary stop lines painted on the road both at the east end of the slip road and the east end of the A8 exiting from under the roundabout. The location of these lights would enable integration with the existing controllers for the lights on the roundabout thus keeping them in sequence.

- It was agreed by all present that physical separation of traffic, however difficult, i.e prohibit city bound access from Gogar roundabout slip road, should be considered during traffic modelling

- Phase 2

  Following the completion of phase 1 a temporary running lane will be built in the verge to the north of the existing slip-road. The traffic management will then switch to the inside lane of the slip road although by the use of the temporary road 2 lanes of traffic will then be retained on the slip road city bound.

  Traffic management to the lanes under the roundabout will see the eastbound (city bound) lanes closed to public traffic with a contra-flow in place to allow east and west bound traffic to run on the westbound (towards airport) lanes only.

- Phase 3

  The eastbound slip road is fully re-opened in original configuration.

  The contra-flow on the lanes under the roundabout will be switched from the westbound lanes to the eastbound lanes i.e. 2 directional traffic flows on eastbound (city bound) lanes only with the westbound lanes closed to public traffic.

  The west-bound slip-road from the A8 to the Gogar roundabout will be reduced to one lane at the point of the sub-way but will open out again to three lanes prior to meeting the roundabout. This ensures that traffic can set itself for exits to the Gyle or City bypass.

- Phase 4 (South Side)

  This will see the westbound slip road from the A8 into the Gyle centre closed completely with Gyle bound traffic directed up to the Gogar roundabout then back into the Gyle.

  Note that sheet piling required for phases 1 and 4 is very close to the running lanes and will therefore have to be installed either overnight or in periods where the road can be closed to traffic.

  Hammer noise and vibration radius will also have to be considered with residential properties situated just to the north-east of the worksite.

- Phases 1 & 2 will provide the most challenging in terms of traffic management with the part closure of slip roads.

- Tie requested BBS to consider the implications of re-programming the A8 underpass from its current north–south to south–north i.e phases 1-4 changed to 4-1.
  Both TEL and L&BP requested that the construction sequencing be maintained as programmed i.e North-South as this completes the most difficult phase 1 in terms of traffic management at the most suitable period.

- Tie confirmed that the sewer diversion would be carried out under the MUDFA contract and should have no impact on the underpass construction as the subway construction is currently programmed to complete in June 2009 with the next activities for drainage and

trackwork not programmed to commence until November 2009 as the logic is dependant on the completion of structure S32 Depot Access bridge.

- If the depot access bridge has been re-located in the current design, further north then this can be started earlier as there will be no impact on underpass construction and associated traffic management.

A8 Underpass / Guided Busway Interface

- As design changes have evolved and the location of the Gogar Depot has moved north, the requirement for a contiguous piled wall along the north side of the A8 has been reduced to a requirement for a soil nailed wall only.

  This should reduce the construction duration required for the A8 wall and thus make it possible to commence the A8 Underpass earlier.

- This has to be managed to avoid the Royal Highland Show at Ingliston Showground in June 2008 as this will put immense pressure on any traffic management in place prior to the show.

  CEC events team to confirm dates for Royal Highland Show (TC)

- BBS to re-programme A8 Underpass to commence in late June 2008, (following completion of Highland Show) which will see completion approx end of 3rd week of April 2009 resulting in a 7-8 week overlap with the guided busway construction commencing in February 2009.

Attachment 1

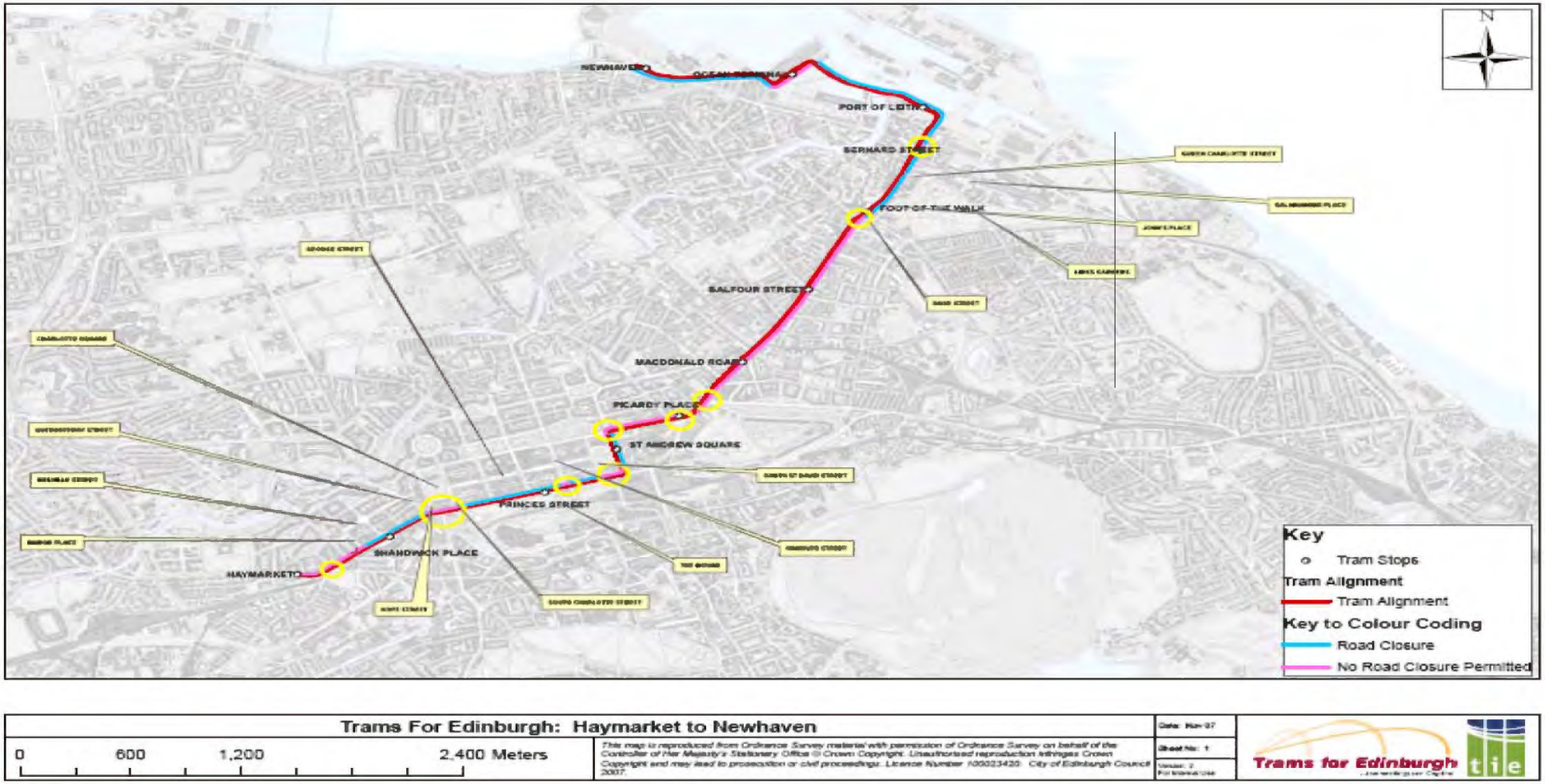

Trams For Edinburgh: Haymarket to Newhaven

0 600 1,200 2,400 Meters

This map is reproduced from Ordnance Survey material with permission of Ordnance Survey on behalf of the Controller of Her Majesty's Stationery Office © Crown Copyright. Unauthorised reproduction infringes Crown Copyright and may lead to prosecution or civil proceedings. Licence Number 100023420 City of Edinburgh Council 2007.

Date: Mar-07
Sheet No: 1
Version: 2
For Internal Use

Trams for Edinburgh

Attachment 2

EDINBURGH TRAM PROJECT
CITY CENTRE INFRACO CONSTRUCTION CONSTRAINTS

Item	Junction / Area	Linked Area	Limits	Bus Diversions		General Traffic		Other Constraints	Possible Alternatives	Associated Works Required	Comments
				Westbound	Eastbound	Westbound	Eastbound				
01	Haymarket Junction		Frontage of Dalry Ale House with Haymarket Station to West Side of Palmerston Place (includes left turn into Palmerston Place)					Haymarket Terrace to Shandwick Place and Dalry Road to Shandwick place are critical routes bus routes must be maintained through the junction during construction.			Low Traffic 120 buses per hour in each direction through the junction
02	Haymarket Junction	West Maitland Street	West Side of Palmerston Place (excluding left turn into Palmerston Place) to West side of Manor Place (includes left turn in Manor Place)					This is a critical area and cannot be closed to traffic			
03		Shandwick Place	East side of Manor Place to West Side of Queensferry Street	[illegible]	[illegible]	[illegible]	[illegible]	[illegible]		[illegible]	[illegible]
04		Princes Street	East side of Queensferry Street to West side of Frederick Street	[illegible]	[illegible]			[illegible]		[illegible]	[illegible]
05		Princes Street	East side of Frederick Street to West side of South Charlotte Street	[illegible]	[illegible]			[illegible]		[illegible]	[illegible]
06		Princes Street	East side of Frederick Street to West side of South Charlotte Street	[illegible]	[illegible]			[illegible]		[illegible]	[illegible]
06B		St Andrew Square	[illegible]					[illegible]			[illegible]
07		York Place	York Place from junction with North St Andrew Street to junction with Princes Street/Hanover Street and including both of these junctions					[illegible]			Eastbound and westbound traffic could be contained on north side of street
08		Leith Walk	Between Picardy Place roundabout and London Road roundabout					Maintain 2-way traffic flow			
09		Leith Walk	From approx. 200yds North of London Road roundabout to approx. 200yds South of End of the Walk					[illegible]		Parking restrictions needed in Hopefield Crescent if needed for bus diversion route	All traffic flows have to be maintained in Northbound and Southbound directions. There will be constraints around the construction of pavement because the access to example right turns
10		Constitution Street	Constitution Street north of junction with Dublin Lane to North side of Queen Charlotte Street (including both sides of junction with Dublin Street)					[illegible]		[illegible]	[illegible]
11		Constitution Street	Constitution Street north of junction with Dublin Lane to North side of Queen Charlotte Street (excluding junction)					[illegible]		[illegible]	[illegible]
12		Constitution Street	Constitution Street north of junction with Bath Street / Bernard Street					[illegible]		[illegible]	[illegible]
13		Constitution Street	Constitution Street north (excluded junction with Bath Street / Bernard Street) to junction at Coburg Street					Maintenance access at Coburg Square has to remain open		[illegible]	[illegible]
14		Queen Street / Queensferry	Coburg Square junction to Ocean Terminal (left turn access to terminal)					[illegible]		[illegible]	[illegible]
15		Ocean Terminal	Along the front of Ocean Terminal					Priority traffic flow with tourist and coaching areas to be kept to a minimum			See item 14 regarding new road
16		Newhaven	Ocean Terminal to Newhaven (left turn into Newhaven)					[illegible]			[illegible]
MAJOR JUNCTIONS											
17	Haymarket Junction (See item 01 above)		Frontage of Dalry Ale House with Haymarket Station to West Side of Palmerston Place (includes left turn into Palmerston Place)					Haymarket Terrace to Shandwick Place and Dalry Road to Shandwick place are critical routes bus routes must be maintained through the junction during construction.			Needs to be programmed independently from items 3-6 inclusive and 10-16-20-21-22-23-24 but linked to appropriate street sections
18	Haymarket Junction (See item 02 above)	West Maitland Street	West Side of Palmerston Place (excluding left turn into Palmerston Place) to West side of Manor Place (includes left turn in Manor Place)					This is a critical area and cannot be closed to traffic			Needs to be programmed independently from items 3-6 inclusive and 10-16-20-21-22-23-24 but linked to appropriate street sections

Trams for Edinburgh

EDINBURGH TRAM PROJECT
CITY CENTRE INFRACO CONSTRUCTION CONSTRAINTS

				Bus Diversions		General Traffic					
Item	Junction / Area	Linked Area	Limits	Westbound	Eastbound	Westbound	Eastbound	Other Constraints	Possible Alleviations	Associated Works Required	Comments
18b	West End		[illegible]						Potential to programme over short full closure e.g. proposed week-end working		Needs to be programmed independently from items 1-3 inclusive and 17-19, 20b, 20-24, 32-34 but linked to appropriate street sections
19b	West End		[illegible]						Potential to programme over short full closure e.g. proposed week-end working		Needs to be programmed independently from items 1-3 and 17-18, 19b, 20-24, 32-34 but linked to appropriate street sections
20	Princes Street		[illegible]						Potential to programme over short full closure e.g. proposed week-end working		Needs to be programmed independently from items 1-3, 5-8, 17 & 17-19, 19-21, 23-25, 34 but linked to appropriate street sections
21	Princes Street		[illegible]					Permanent Traffic Management needs to be in place on west side of St Andrew Square before this work is undertaken	Potential to programme over short full closure e.g. proposed week-end working		Needs to be programmed independently from items 1-3, 5-8, 17-19, 20-22, 25-34 but linked to appropriate street sections
22	York Place		[illegible]					Permanent Traffic Management needs to be in place on west side of St Andrew Square before this work is undertaken		Changes to road marks / Removal of stops?	Not to be undertaken at same time as 19-21
23	Lothian Road		[illegible]							Changes to road marks	Not to be undertaken at same time as 19-21
24	Lothian Road		[illegible]								Not to be undertaken at same time as 19-21
26	Lothian Road		[illegible]						Potential to programme over short full closure e.g. proposed week-end working		Not to be undertaken at same time as 28
29	Cockburn Street		[illegible]						Potential to programme over short full closure e.g. proposed week-end working		Not to be undertaken at same time as 30
GENERAL											
26	ALL		Tall Ships					Access to be maintained for working for businesses and residents at all times			
27	ALL		Expected to Priority Place					August festival restriction period will run from 1st Sunday in August to 1st Sunday in September inclusive			
28	ALL		Expected to Priority Place					December Christmas market restriction period will run from 1st of December to the first working day of the New Year inclusive			
30	ALL		Major junctions					Major junctions to be operational when Major events at Murrayfield (20,000 plus spectators)			
31	ALL		Major junctions					Major junctions to be operational when Rugby internationals at Murrayfield			
32	ALL		Major junctions					Major junctions to be operational when Hearts / Hibs football matches scheduled			
33	ALL		Major junctions					Major junctions to be operational when either Hearts or Hibs play either Rangers or Celtic			
		[illegible]									
		[illegible]									

Activity ID	Activity Name	Original Duration	Start	Finish
Total		1221d	19-Sep-05 A	01-Jul-10
ULE90130 SDS Edinburgh Tram V26 update on V25 - Actual progress to Data Date 14th Jan 08 Rec 04Feb08		1221d	19-Sep-05 A	01-Jul-10
MS - Programme Key Milestones		1221d	19-Sep-05 A	01-Jul-10
MS - Programme Key Milestones		1221d	19-Sep-05 A	01-Jul-10
MS - Programme Key Milestones		1221d	19-Sep-05 A	01-Jul-10
SDS Key Milestones		824d	19-Sep-05 A	04-Dec-08
CON-0000	PB SDS Contractual Start Date	0d	19-Sep-05 A	
SDS001	Preliminary Design Phase Start	0d	19-Dec-05 A	
SDS007	Preliminary Design Complete for tie Submission	0d		30-Jun-06 A
SDS008	Preliminary Design Release Final	0d		28-Jul-06 A
SDS009	Preliminary Design Phase Finished	0d		30-Jun-06 A
SDS020	All Outstanding Preliminary Design Issues Resolved	0d		24-Apr-08
General		0d	03-Jul-06 A	03-Jul-06 A
SDS010	Detailed Design Phase Start	0d	03-Jul-06 A	
ROR Presentations		123d	12-Sep-07 A	12-Mar-08
Craigleith Tram Stop		9d	12-Sep-07 A	25-Sep-07 A
SDS80920	Review Session	0d		12-Sep-07 A
SDS80930	ROR Presentation	0d		19-Sep-07 A
SDS80940	Formal Issue of ROR	0d		25-Sep-07 A
Craigleith Bank Retaining Wall		9d	19-Sep-07 A	02-Oct-07 A
SDS79760	Review Session	0d		19-Sep-07 A
SDS79770	ROR Presentation	0d		26-Sep-07 A
SDS79780	Formal Issue of ROR	0d		02-Oct-07 A
St George's Access Bridge		9d	19-Sep-07 A	02-Oct-07 A
SDS79790	Review Session	0d		19-Sep-07 A
SDS79800	ROR Presentation	0d		26-Sep-07 A
SDS79810	Formal Issue of ROR	0d		02-Oct-07 A
3A Roads		9d	26-Sep-07 A	09-Oct-07 A
SDS79310	Review Session	0d		26-Sep-07 A
SDS79320	ROR Presentation	0d		03-Oct-07 A
SDS79330	Formal Issue of ROR	0d		09-Oct-07 A
Roseburn Junction to Granton Square Street Lighting		9d	03-Oct-07 A	16-Oct-07 A
SDS79340	Review Session	0d		03-Oct-07 A
SDS79350	ROR Presentation	0d		10-Oct-07 A
SDS79360	Formal Issue of ROR	0d		16-Oct-07 A
Roseburn Junction to Granton Square Boundary & Accomodation Works		9d	03-Oct-07 A	16-Oct-07 A
SDS79370	Review Session	0d		03-Oct-07 A
SDS79380	ROR Presentation	0d		10-Oct-07 A
SDS79390	Formal Issue of ROR	0d		16-Oct-07 A
South Groathill Avenue Substation		9d	10-Oct-07 A	23-Oct-07 A
SDS79400	Review Session	0d		10-Oct-07 A
SDS79410	ROR Presentation	0d		17-Oct-07 A
SDS79420	Formal Issue of ROR	0d		23-Oct-07 A
Roseburn Junction to Granton Square OLE		9d	10-Oct-07 A	23-Oct-07 A
SDS79430	Review Session	0d		10-Oct-07 A
SDS79440	ROR Presentation	0d		17-Oct-07 A
SDS79450	Formal Issue of ROR	0d		23-Oct-07 A
Section 5C Drainage (Roads & Track)		9d	17-Oct-07 A	30-Oct-07 A
SDS79460	Review Session	0d		17-Oct-07 A
SDS79470	ROR Presentation	0d		24-Oct-07 A
SDS79480	Formal Issue of ROR	0d		30-Oct-07 A
Alignment - Subsection 1B		9d	17-Oct-07 A	30-Oct-07 A
SDS79550	Review Session	0d		17-Oct-07 A
SDS79560	ROR Presentation	0d		24-Oct-07 A
SDS79570	Formal Issue of ROR	0d		30-Oct-07 A
Coltbridge Viaduct Design Review		9d	24-Oct-07 A	06-Nov-07 A
SDS79880	Review Session	0d		24-Oct-07 A
SDS79890	ROR Presentation	0d		31-Oct-07 A
SDS79900	Formal Issue of ROR	0d		06-Nov-07 A
Russell Road Bridge (Substructure and Superstructure)		9d	24-Oct-07 A	06-Nov-07 A
SDS79580	Review Session	0d		24-Oct-07 A
SDS79590	ROR Presentation	0d		31-Oct-07 A
SDS79600	Formal Issue of ROR	0d		06-Nov-07 A
Hard & Soft Landscaping - Section 3A		10d	07-Nov-07 A	21-Nov-07 A
SDS79640	Review Session	0d		07-Nov-07 A
SDS79650	ROR Presentation	0d		14-Nov-07 A
SDS79660	Formal Issue of ROR	0d		21-Nov-07 A
Hard & Soft Landscaping - Section 1D		10d	07-Nov-07 A	21-Nov-07 A
SDS79520	Review Session	0d		07-Nov-07 A
SDS79530	ROR Presentation	0d		14-Nov-07 A
SDS79540	Formal Issue of ROR	0d		21-Nov-07 A
Section 5A Boundary and Accomodation Works		9d	15-Nov-07 A	28-Nov-07 A
SDS79610	Review Session	0d		15-Nov-07 A
SDS79620	ROR Presentation	0d		21-Nov-07 A
SDS79630	Formal Issue of ROR	0d		28-Nov-07 A
Section 1D Street Lighting		9d	15-Nov-07 A	28-Nov-07 A
SDS81570	Review Session	0d		15-Nov-07 A
SDS81580	ROR Presentation	0d		22-Nov-07 A
SDS81590	Formal Issue of ROR	0d		28-Nov-07 A
Section 2A Alignment		9d	22-Nov-07 A	05-Dec-07 A
SDS79700	Review Session	0d		22-Nov-07 A
SDS79710	ROR Presentation	0d		29-Nov-07 A
SDS79720	Formal Issue of ROR	0d		05-Dec-07 A
Section 2A Roads		9d	22-Nov-07 A	05-Dec-07 A
SDS79730	Review Session	0d		22-Nov-07 A
SDS79740	ROR Presentation	0d		29-Nov-07 A
SDS79750	Formal Issue of ROR	0d		05-Dec-07 A
Depot Office Building		9d	29-Nov-07 A	12-Dec-07 A
SDS81480	Review Session	0d		29-Nov-07 A
SDS81490	ROR Presentation	0d		06-Dec-07 A
SDS81500	Formal Issue of ROR	0d		12-Dec-07 A
Section 2A Drainage (Roads and Track)		9d	06-Dec-07 A	19-Dec-07 A
SDS81420	Review Session	0d		06-Dec-07 A
SDS81430	ROR Presentation	0d		13-Dec-07 A
SDS81440	Formal Issue of ROR	0d		19-Dec-07 A
Haymarket Station Viaduct		9d	06-Dec-07 A	19-Dec-07 A
SDS81600	Review Session	0d		06-Dec-07 A
SDS81610	ROR Presentation	0d		13-Dec-07 A
SDS81620	Formal Issue of ROR	0d		19-Dec-07 A
OLE Building Fixings		6d	13-Dec-07 A	21-Dec-07 A
SDS79850	Review Session	0d		13-Dec-07 A
SDS79860	ROR Presentation	0d		20-Dec-07 A
SDS79870	Formal Issue of ROR	0d		21-Dec-07 A

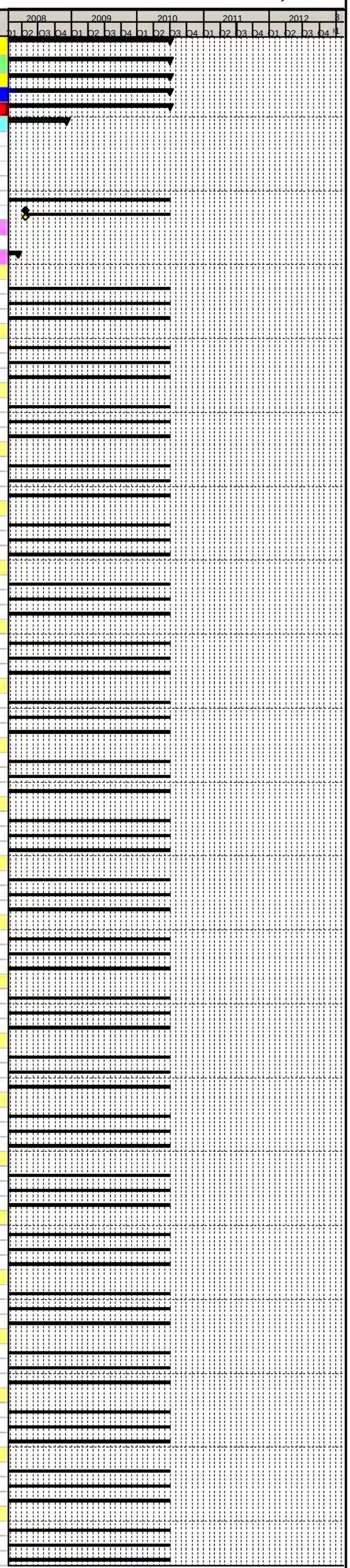

Primary Baseline
Actual Work
Remaining Work
Critical Remaining Work
Baseline Milestone
Milestone

Trams for Edinburgh ...connecting our Capital

Edinburgh Tram Project

SDS FULL DESIGN PROGRAMME @ V26

tie

Activity ID	Activity Name	Original Duration	Start	Finish
Princes Street Tram Stop		12d	20-Dec-07 A	16-Jan-08
SDS79490	Review Session	0d		20-Dec-07 A
SDS79500	ROR Presentation	0d		10-Jan-08 A
SDS79510	Formal Issue of ROR	0d		16-Jan-08
Bernard Street Stop		12d	20-Dec-07 A	16-Jan-08
SDS79820	Review Session	0d		20-Dec-07 A
SDS79830	ROR Presentation	0d		10-Jan-08 A
SDS79840	Formal Issue of ROR	0d		16-Jan-08
Catherdrale Lane Substation		9d	10-Jan-08 A	23-Jan-08
SDS82440	Review Session	0d		10-Jan-08 A
SDS82450	ROR Presentation	0d		17-Jan-08
SDS82460	Formal Issue of ROR	0d		23-Jan-08
Systems & Communications		9d	17-Jan-08	30-Jan-08
SDS79670	Review Session	0d		17-Jan-08*
SDS79680	ROR Presentation	0d		24-Jan-08
SDS79690	Formal Issue of ROR	0d		30-Jan-08
Edinburgh Park Station Viaduct		9d	17-Jan-08	30-Jan-08
SDS81630	Review Session	0d		17-Jan-08*
SDS81640	ROR Presentation	0d		24-Jan-08
SDS81650	Formal Issue of ROR	0d		30-Jan-08
Section 1B Roads		9d	24-Jan-08	06-Feb-08
SDS82500	Review Session	0d		24-Jan-08*
SDS82510	ROR Presentation	0d		31-Jan-08
SDS82520	Formal Issue of ROR	0d		06-Feb-08
Section 1D Roads		9d	24-Jan-08	06-Feb-08
SDS82530	Review Session	0d		24-Jan-08*
SDS82540	ROR Presentation	0d		31-Jan-08
SDS82550	Formal Issue of ROR	0d		06-Feb-08
Section 5C Hard and Soft Landscaping		9d	31-Jan-08	13-Feb-08
SDS82470	Review Session	0d		31-Jan-08*
SDS82480	ROR Presentation	0d		07-Feb-08
SDS82490	Formal Issue of ROR	0d		13-Feb-08
Depot Hard and Soft Landscaping		9d	31-Jan-08	13-Feb-08
SDS82560	Review Session	0d		31-Jan-08*
SDS82570	ROR Presentation	0d		07-Feb-08
SDS82580	Formal Issue of ROR	0d		13-Feb-08
Depot Earthworks and Ducting		9d	07-Feb-08	20-Feb-08
SDS82590	Review Session	0d		07-Feb-08*
SDS82600	ROR Presentation	0d		14-Feb-08
SDS82610	Formal Issue of ROR	0d		20-Feb-08
Depot Drainage		9d	07-Feb-08	20-Feb-08
SDS82620	Review Session	0d		07-Feb-08*
SDS82630	ROR Presentation	0d		14-Feb-08
SDS82640	Formal Issue of ROR	0d		20-Feb-08
Section 1A Roads		9d	14-Feb-08	27-Feb-08
SDS82650	Review Session	0d		14-Feb-08*
SDS82660	ROR Presentation	0d		21-Feb-08
SDS82670	Formal Issue of ROR	0d		27-Feb-08
Section 1C Roads		9d	14-Feb-08	27-Feb-08
SDS82680	Review Session	0d		14-Feb-08*
SDS82690	ROR Presentation	0d		21-Feb-08
SDS82700	Formal Issue of ROR	0d		27-Feb-08
Section 5C Drainage Revisit		9d	21-Feb-08	05-Mar-08
SDS82710	Review Session	0d		21-Feb-08*
SDS82720	ROR Presentation	0d		28-Feb-08
SDS82730	Formal Issue of ROR	0d		05-Mar-08
TBC 1		9d	21-Feb-08	05-Mar-08
SDS82770	Review Session	0d		21-Feb-08*
SDS82780	ROR Presentation	0d		28-Feb-08
SDS82790	Formal Issue of ROR	0d		05-Mar-08
TBC 2		9d	28-Feb-08	12-Mar-08
SDS82800	Review Session	0d		28-Feb-08*
SDS82810	ROR Presentation	0d		06-Mar-08
SDS82820	Formal Issue of ROR	0d		12-Mar-08
TBC 3		9d	28-Feb-08	12-Mar-08
SDS82740	Review Session	0d		28-Feb-08*
SDS82750	ROR Presentation	0d		06-Mar-08
SDS82760	Formal Issue of ROR	0d		12-Mar-08
Detail Design Submittals to tie		344d	31-Jul-07 A	03-Dec-08
SDS030	Complete All Detail Design Submittals to tie	0d		03-Dec-08
SDS73360	Detail Design Submittals to tie Complete For Section 1	0d		17-Sep-08
SDS73370	Detail Design Submittals to tie Complete For Section 2	0d		31-Jul-07 A
SDS73380	Detail Design Submittals to tie Complete For Section 3	0d		14-Jan-08
SDS73390	Detail Design Submittals to tie Complete For Section 5	0d		03-Jul-08
SDS73400	Detail Design Submittals to tie Complete For Section 6	0d		26-Mar-08
SDS73410	Detail Design Submittals to tie Complete For Section 7	0d		03-Jul-08
Detail Design Submittals to CEC		109d	08-Feb-08	10-Jul-08
SDS73420	Detail Design Submittals to CEC Complete For Section 6	0d		09-Jun-08
SDS73430	Detail Design Submittals to CEC Complete For Section 1	0d		10-Jul-08
SDS73440	Detail Design Submittals to CEC Complete For Section 3	0d		11-Apr-08
SDS73450	Detail Design Submittals to CEC Complete For Section 2	0d		08-Feb-08
SDS73460	Detail Design Submittals to CEC Complete For Section 5	0d		01-Apr-08
SDS73470	Detail Design Submittals to CEC Complete For Section 7	0d		01-Apr-08
IDRs		515d	24-Nov-06 A	04-Dec-08
SDS050	Intermediate Design Review (IDR) 1	0d		24-Nov-06 A
SDS67810	Intermediate Design Review (IDR) 2	0d		29-Mar-07 A
SDS67820	Intermediate Design Review (IDR) 3	0d		18-Apr-07 A
SDS67830	Intermediate Design Review (IDR) 4	0d		13-Jun-07 A
SDS67840	Intermediate Design Review (IDR) 5	0d		08-Aug-07 A
SDS67860	System Detail Design Review Resources	203d	05-Feb-07 A	10-Dec-07 A
SDS74080	Intermediate Design Review (IDR) 6	0d		26-Sep-07 A
SDS74090	Intermediate Design Review (IDR) 7	0d		14-Jan-08*
SDS74100	Intermediate Design Review (IDR) 8	0d		16-Jan-08*
SDS82910	System Detail Design Review	9d	20-Nov-08	04-Dec-08
TIE Milestones		1221d	19-Sep-05 A	01-Jul-10
SDS67370	DFBC Stage 1 Submission	0d		15-Nov-06 A
SDS67390	CEC (Full Council) Approval of DFBC - Stage 1	0d		21-Dec-06 A
TIE0100	TIE Award SDS Contract Start Date	0d	19-Sep-05 A	
TIE0101	6 Week Plan Submissions	0d		31-Oct-05 A
TIE0102	13 Week Deliverables	0d		19-Dec-05 A
TIE0103	Royal Assent	0d	08-May-06 A	
TIE0104	Tram Delivery	0d	23-Oct-09*	
TIE0105	Commissioning, Trial Running & Driver Training Complete	0d	23-Oct-09*	

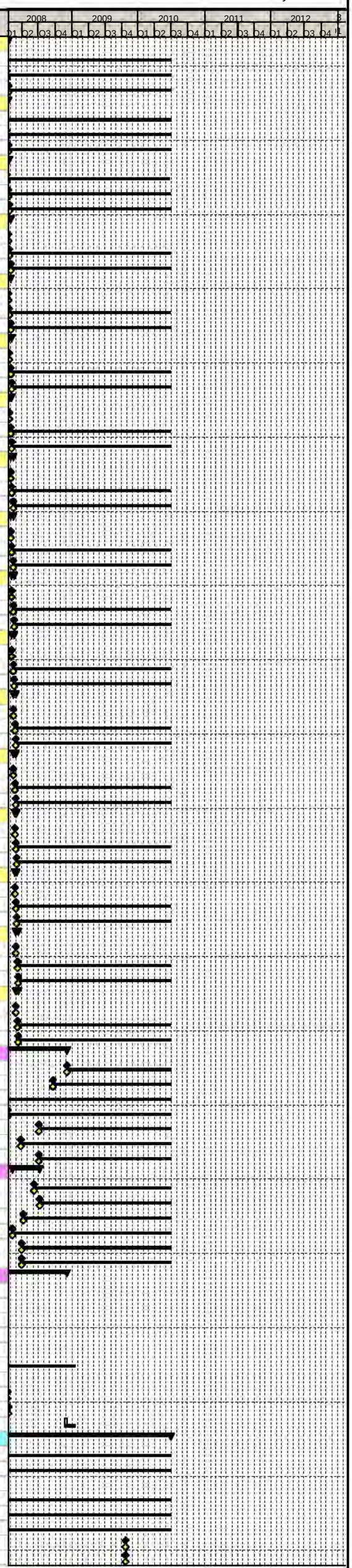

Primary Baseline
Actual Work
Remaining Work
Critical Remaining Work
Baseline Milestone
Milestone

Trams for Edinburgh
connecting our Capital

Edinburgh Tram Project

SDS FULL DESIGN PROGRAMME @ V26

tie

Activity ID	Activity Name	Original Duration	Start	Finish
TIE0106	Scheduled Opening Date	0d		01-Jul-10*
PPWA - PROCUREMENT		326d	22-Sep-06 A	14-Jan-08
PPWA - PROCUREMENT		326d	22-Sep-06 A	14-Jan-08
PPWA - PROCUREMENT		326d	22-Sep-06 A	14-Jan-08
TRAMCO		0d	05-Oct-06 A	05-Oct-06 A
SDS67360	TRAMCO Bids Submitted	0d		05-Oct-06 A
INFRACO		319d	03-Oct-06 A	14-Jan-08
SDS67340	INFRACO ITN Issued	0d		03-Oct-06 A
SDS67520	INFRACO Commence On Street	0d		14-Jan-08*
MUDFA		0d	22-Sep-06 A	22-Sep-06 A
SDS67330	MUDFA Contractor Appointed	0d		22-Sep-06 A
MPWA - MANAGEMENT Project Wide Activities		647d	19-Sep-05 A	31-Mar-08
MPWA - MANAGEMENT Project Wide Activities		647d	19-Sep-05 A	31-Mar-08
MPWA - Management Project Wide Activities		647d	19-Sep-05 A	31-Mar-08
SDS Contractual Requirements Deliverable Lists. (CDRLs)		60d	30-Sep-05 A	23-Dec-05 A
RD - Contractual Requirements Deliverables List		60d	30-Sep-05 A	23-Dec-05 A
SDS-000	Deliverables Matrix	0d	19-Dec-05 A	
SDS-001	Project Management Plan	0d	30-Nov-05 A	
SDS-002	Quality Management Plan	0d	30-Nov-05 A	
SDS-004	Configuration Management Plan	0d	30-Nov-05 A	
SDS-005	Verification and Validation Plan	0d	30-Nov-05 A	
SDS-006	Programme Schedule 05 12 05	0d	05-Dec-05 A	
SDS-007-001	Requirements Specification :- Architectural	0d	19-Dec-05 A	
SDS-007-002	Requirements Specification :- Depot CCTV	0d	19-Dec-05 A	
SDS-007-003	Requirements Specification :- Depot Control & Equipment Room.	0d	19-Dec-05 A	
SDS-007-004	Requirements Specification :- Electrical Works	0d	19-Dec-05 A	
SDS-007-005	Requirements Specification :- Integrated Fare Collection	0d	19-Dec-05 A	
SDS-007-006	Requirements Specification :- Mechanical & Public Health Works	0d	19-Dec-05 A	
SDS-007-007	Requirements Specification :- Operational and Performance	0d	19-Dec-05 A	
SDS-007-008	Requirements Specification :- Operational Radio System	0d	19-Dec-05 A	
SDS-007-009	Requirements Specification :- Operations Data Network	0d	19-Dec-05 A	
SDS-007-010	Requirements Specification :- Overhead Line Equipment	0d	23-Dec-05 A	
SDS-007-011	Requirements Specification :- Roads	0d	19-Dec-05 A	
SDS-007-012	Requirements Specification :- SCADA System (Aux & Traction Power)	0d	19-Dec-05 A	
SDS-007-013	Requirements Specification :- Structures	0d	19-Dec-05 A	
SDS-007-014	Requirements Specification :- System Wide Non-Functional	0d	19-Dec-05 A	
SDS-007-015	Requirements Specification :- Telephone Network	0d	19-Dec-05 A	
SDS-007-016	Requirements Specification :- Track & Formation	0d	19-Dec-05 A	
SDS-007-017	Requirements Specification :- Traction Power Outline	0d	19-Dec-05 A	
SDS-007-018	Requirements Specification :- Tram Position & Detection System	0d	19-Dec-05 A	
SDS-007-019	Requirements Specification :- Trams	0d	19-Dec-05 A	
SDS-007-020	Requirements Specification :- Selection of Traction Voltage	0d	19-Dec-05 A	
SDS-008	Preliminary HIRA Tram Report	0d	19-Dec-05 A	
SDS-009	Hazard Log	0d	19-Dec-05 A	
SDS-010	Preliminary Safety Case Arguments (GSN)	0d	19-Dec-05 A	
SDS-011	List of Applicable Standards	0d	19-Dec-05 A	
SDS-013	Requirements Database Baseline Report N0 1	0d	19-Dec-05 A	
SDS-015	Environmental Management Plan	0d	19-Dec-05 A	
SDS-016	Approvals & Concents Management plan	0d	19-Dec-05 A	
SDS-018	Risk Management Plan	0d	19-Dec-05 A	
SDS-019	Communication plan	0d	19-Dec-05 A	
SDS-020	Outline EMC Management Plan	0d	19-Dec-05 A	
SDS-021	Chainage System Definition	0d	19-Dec-05 A	
SDS-022	Technology Review - Wire - Free Traction System	0d	19-Dec-05 A	
SDS-023	Technology Review - In Street Trackform	0d	19-Dec-05 A	
SDS-024	St Andrews Square Alignment Design Study	0d	19-Dec-05 A	
SDS-025	Requirements Database Populated	0d		20-Dec-05 A
SDS-026	Integrated Fare Collection Technology Review	0d	19-Dec-05 A	
SDS-027	Preliminary HIRA Electrification & Power Report	0d	19-Dec-05 A	
SDS-028	Preliminary HIRA Operations & Maintenance Report	0d	19-Dec-05 A	
SDS-029	Preliminary HIRA SCC Report	0d	19-Dec-05 A	
SDS-030	Technology Review - Wirless Communications	0d	19-Dec-05 A	
SDS-031	Assumptions Register	0d	19-Dec-05 A	
SDS-032	Safety Management Plan	0d	30-Nov-05 A	
SDS-033	Requirements Test Specification	0d	19-Dec-05 A	
SDS-034	Risk Register	0d	19-Dec-05 A	
SDS-036	Prepare, Review & Deliver List A	26d	30-Sep-05 A	04-Nov-05 A
Bid to Cost Delta		95d	20-Feb-06 A	30-Jun-06 A
A569540	PD - Cost Delta	95d	20-Feb-06 A	30-Jun-06 A
Management (Task100)		638d	30-Sep-05 A	31-Mar-08
A00040	Information Management	76d	30-Sep-05 A	23-Jan-06 A
A00050	Project Management - Site Based	64d	30-Sep-05 A	04-Jan-06 A
A00060	Project Management - Office Based	64d	30-Sep-05 A	04-Jan-06 A
A00080	Change Control Management	66d	14-Oct-05 A	20-Jan-06 A
A00090	Project Management - System Integration	66d	14-Oct-05 A	20-Jan-06 A
A00100	Document Controller	60d	28-Oct-05 A	27-Jan-06 A
A00110	RFI Management	19d	30-Nov-05 A	02-Jan-06 A
A00120	Sr Management Costs	32d	30-Nov-05 A	20-Jan-06 A
A0040	RC Project Programme Plan	76d	30-Sep-05 A	20-Jan-06 A
A0050	CORDOROY Contract award	64d	30-Sep-05 A	04-Jan-06 A
A0094010	Risk Register & Management	76d	30-Sep-05 A	20-Jan-06 A
A486768	PD - SDS Project and Technical Management	120d	16-Jan-06 A	30-Jun-06 A
A486778	PD - Design Management	120d	16-Jan-06 A	30-Jun-06 A
A486788	PD - OLE Management	120d	16-Jan-06 A	30-Jun-06 A
A486798	PD - Technical Procurement	120d	16-Jan-06 A	30-Jun-06 A
A486808	PD- Halcrow Design Management	120d	16-Jan-06 A	30-Jun-06 A
A486818	PD - Safety Management	120d	16-Jan-06 A	30-Jun-06 A
A486828	PD - Architecture Management	117d	03-Jan-06 A	30-Jun-06 A
A486838	PD - Quality Management	120d	16-Jan-06 A	30-Jun-06 A
A486848	PD - Construction Management	105d	06-Feb-06 A	30-Jun-06 A
A486868	DD - Project Controls (Task 100.3)	409d	03-Jul-06 A	31-Mar-08
A486878	DD - Project Management (Task100.1)	409d	03-Jul-06 A	31-Mar-08
A486888	DD - Commercial Management (Task 100.6)	409d	03-Jul-06 A	31-Mar-08
A486898	DD - Safety, Quality & Risk Management (Task 100.4)	409d	03-Jul-06 A	31-Mar-08
A486908	PD - Track Management	109d	16-Jan-06 A	30-Jun-06 A
A486918	DD - Administration (Task 900.1)	400d	03-Jul-06 A	14-Mar-08
A486919	DD - Internal Transfer From PD (Task 999)	5d	03-Jul-06 A	07-Jul-06 A
A486958	DD - Internal Change Control Database Development (Task 955.1))	17d	01-Nov-06 A	24-Nov-06 A
A486968	DD - Design Management (Task 100.2)	409d	03-Jul-06 A	31-Mar-08
A486978	DD - Engineering Management (Task 100.7)	358d	03-Jul-06 A	14-Jan-08
A486998	DD - Procurement Management (Task 100.8)	408d	03-Jul-06 A	28-Mar-08
A487018	DD - CAD Management & On Site Support (Task 100.9)	349d	31-Jul-06 A	25-Jan-08
A487038	DD - Structures Management (Task200.11)	409d	03-Jul-06 A	31-Mar-08

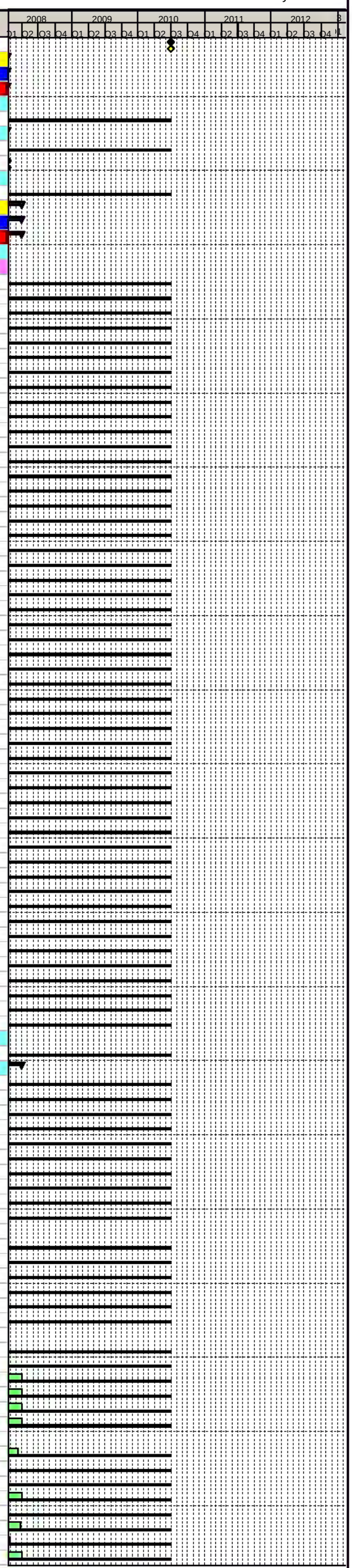

Primary Baseline
Actual Work
Remaining Work
Critical Remaining Work
Baseline Milestone
Milestone

Trams for Edinburgh ...connecting our Capital

Edinburgh Tram Project

SDS FULL DESIGN PROGRAMME @ V26

tie

Activity ID	Activity Name	Original Duration	Start	Finish
A487048	DD - Configuration Management (Task 865)	270d	31-Jul-06 A	21-Sep-07 A
A487058	Halcrow Resources	120d	16-Jan-06 A	30-Jun-06 A
A487068	DD - Planning Drawings Management (Task 100.10)	205d	12-Mar-07 A	25-Jan-08
A487078	DD - Halcrow Management	409d	03-Jul-06 A	31-Mar-08
A487088	DD - Construction Management (Task 894.1)	370d	03-Jul-06 A	30-Jan-08
VO1410	VO38 CNS016 Procurement Support/ITN Submissions	85d	03-Jul-06 A	07-Nov-06 A
Mobilisation		9d	19-Sep-05 A	30-Sep-05 A
A00020	Mobilisation Fee	9d	19-Sep-05 A	30-Sep-05 A
Requirements Database		99d	19-Sep-05 A	02-Feb-06 A
A0070010	Requirements Capture	77d	12-Oct-05 A	02-Feb-06 A
A0070020	Operational and Performance Specification	49d	30-Sep-05 A	07-Dec-05 A
A0070030	List of Applicable Standards	4d	08-Dec-05 A	13-Dec-05 A
A0070040	Requirements Test Specification	1d	14-Dec-05 A	15-Dec-05 A
A0091020	Requirements Database	63d	19-Sep-05 A	14-Dec-05 A
Capital Cost		596d	30-Sep-05 A	31-Jan-08
A486810	Establish Rough Order of Magnitude (ROM)	42d	30-Sep-05 A	28-Nov-05 A
A486820	ROM Line 1 BOQ	19d	27-Apr-06 A	23-May-06 A
A486830	ROM Line 2 BOQ	19d	27-Apr-06 A	23-May-06 A
A486840	ROM Baseline Estimate - Current Pricing Q4-2005	17d	24-May-06 A	15-Jun-06 A
A486850	ROM Escalated Estimate to Reflect inflation to 2Q-2010	11d	15-Jun-06 A	30-Jun-06 A
A486860	PD - Capital Cost	120d	16-Jan-06 A	30-Jun-06 A
A486870	DD - Capital Cost	379d	01-Aug-06 A	31-Jan-08
A486880	ROM Line 1 BOQ & Update Cost Estimate	19d	06-Jun-06 A	30-Jun-06 A
A486890	ROM Line 2 BOQ & Update Cost Estimate	19d	06-Jun-06 A	30-Jun-06 A
Planning & Approvals		521d	20-Feb-06 A	07-Mar-08
A0200160	Planning Approvals	95d	20-Feb-06 A	30-Jun-06 A
A0200170	DD- Prior Approvals	396d	03-Jul-06 A	07-Mar-08
Gateway Review and Finalisation		107d	03-Oct-05 A	28-Feb-06 A
A0010790	Client Review	74d	03-Oct-05 A	19-Jan-06 A
A0010800	Finalise Deliverables	44d	06-Dec-05 A	13-Feb-06 A
A0010810	Preliminary Design Stage Set-up Activities	36d	06-Dec-05 A	01-Feb-06 A
A0010900	Requirements Phase Finished	0d		28-Feb-06 A
Noise & Vibration		272d	06-Mar-06 A	30-Mar-07 A
A569500	Rupert Taylor - Noise & Vibration	84d	06-Mar-06 A	30-Jun-06 A
A569510	DD - Rupert Taylor - Noise & Vibration	178d	17-Jul-06 A	30-Mar-07 A
Stakeholder Management		590d	30-Sep-05 A	23-Jan-08
A0052	Quill Stake Holder Management	91d	30-Sep-05 A	10-Feb-06 A
A569520	PD - Quill Power Stakeholder Management	100d	13-Feb-06 A	30-Jun-06 A
A569530	DD - Quill Power Stakeholder Management	374d	31-Jul-06 A	23-Jan-08
Environmental Planning		140d	16-Jan-06 A	28-Jul-06 A
A569460	PD - Environmental Planning	140d	16-Jan-06 A	28-Jul-06 A
A569570	PD - Urban Design	114d	20-Feb-06 A	28-Jul-06 A
Risk Management		148d	07-Dec-05 A	30-Jun-06 A
A546930	Risk Workshop 01	0d	07-Dec-05 A	
A546940	Risk Workshop 02	0d	18-Jan-06 A	
A546980	Risk Workshop 03 - Trackform	0d	22-Mar-06 A	
A547190	Risk Workshop - Roads, Track & Utilities	0d	14-Jun-06 A	
A547200	Risk Workshop - Programme	0d	27-Apr-06 A	
A547210	Risk Workshop - Third Party Interfaces - BAA, NR, Stakeholders	0d	12-Apr-06 A	
A547220	Risk Workshop - Structures	0d	17-May-06 A	
A547280	Risk Workshop - Radio Base Stations	0d	25-Apr-06 A	
A547300	Risk Workshop - JRC	0d	10-May-06 A	
A569440	SDS Risk Management	120d	16-Jan-06 A	30-Jun-06 A
Value Management		11d	13-Jun-06 A	28-Jun-06 A
A547240	Value Management Workshop (Depot)	0d	28-Jun-06 A	
A547250	Value Management Workshop (Trackform/Pway/Roads)	0d	28-Jun-06 A	
A547260	Value Management Workshop (Initial Meeting)	0d	13-Jun-06 A	
Provisional Additional Work		95d	20-Feb-06 A	30-Jun-06 A
A200210	Provisional Additional Work	95d	20-Feb-06 A	30-Jun-06 A
SDS Support to Tie Tram Selection		95d	20-Feb-06 A	30-Jun-06 A
A567090	SDS Tram Specification	95d	20-Feb-06 A	30-Jun-06 A
SDS Management Support to Eng. System Wide		125d	09-Jan-06 A	30-Jun-06 A
A569930	System Wide Integration/Validation/Configuration	125d	09-Jan-06 A	30-Jun-06 A
Safety Management Activities		105d	19-Sep-05 A	10-Feb-06 A
Safety		101d	19-Sep-05 A	06-Feb-06 A
A0060000	Safety	96d	19-Sep-05 A	06-Feb-06 A
A0060010	Preliminary HIRA	51d	04-Oct-05 A	13-Dec-05 A
A0060020	Preliminary Safety Case Arguments	53d	30-Sep-05 A	13-Dec-05 A
A0060030	Hazard Log & Risk Register	10d	02-Dec-05 A	15-Dec-05 A
Quality		105d	19-Sep-05 A	10-Feb-06 A
A0061000	Quality	100d	19-Sep-05 A	10-Feb-06 A
A0061010	Quality Management Plan	10d	30-Sep-05 A	13-Oct-05 A
A0061020	Configuration Management Plan	6d	14-Oct-05 A	21-Oct-05 A
A0061030	Validation and Verification Plan	5d	24-Oct-05 A	28-Oct-05 A
EPWA - ENGINEERING Project Wide Activities		1221d	19-Sep-05 A	01-Jul-10
EPWA - ENGINEERING Project Wide Activities		1221d	19-Sep-05 A	01-Jul-10
EPWA - ENGINEERING Project Wide Activities		1221d	19-Sep-05 A	01-Jul-10
Track (Task200.1.1)		561d	20-Feb-06 A	02-May-08
Track Management (Task200.1.2)		466d	03-Jul-06 A	02-May-08
A486928	DD - Track Management	417d	03-Jul-06 A	11-Apr-08
A486938	DD - Alignment Management Line 1	152d	14-Aug-06 A	06-Apr-07 A
A486948	DD - Alignment Management	403d	14-Aug-06 A	02-May-08
SDS63600	Optioneering	18d	01-Aug-06 A	25-Aug-06 A
Track Category Plans		293d	20-Feb-06 A	13-Apr-07 A
SDS22600	Produce Track Category Plan	63d	20-Feb-06 A	26-May-06 A
SDS24280	Issue Track Category Plan to tie - All Lines	0d		31-May-06 A
SDS24290	tie Approval Period	18d	31-May-06 A	26-Jun-06 A
SDS24300	Produce Final Track Catagory Plans	61d	06-Dec-06 A	14-Mar-07 A
SDS24310	Issue Final Track Catagory Plans to tie	0d		14-Mar-07 A
SDS24640	Issue Track Category Plan to tie - Line 1	0d		24-Mar-06 A
SDS35000	Receive tie Comments	0d		26-Jun-06 A
SDS35010	Update to tie Comments	5d	27-Jun-06 A	03-Jul-06 A
SDS35020	Re Issue Track Category Plan to tie	0d		03-Jul-06 A
SDS59870	tie Approval Period	19d	15-Mar-07 A	13-Apr-07 A
Typical Tramway Cross Sections		286d	06-Mar-06 A	19-Apr-07 A
SDS22540	Produce Typical Tramway Cross Sections	53d	06-Mar-06 A	26-May-06 A
SDS22550	tie Approval Period	18d	31-May-06 A	26-Jun-06 A
SDS22560	Update to tie Comments	4d	27-Jun-06 A	30-Jun-06 A
SDS22570	Issue Typical Tramway Cross Sections to tie - All Lines	0d		31-May-06 A
SDS22580	Re-Issue Typical Tramway Cross Sections to tie	0d		30-Jun-06 A
SDS23820	Issue Typical Tramway Cross Sections to tie - Line 1	0d		24-Mar-06 A
SDS35030	Produce Final Typical Tramway Cross Sections	57d	12-Dec-06 A	14-Mar-07 A
SDS35040	Issue Final Typical Tramway Cross Sections to tie	0d		14-Mar-07 A

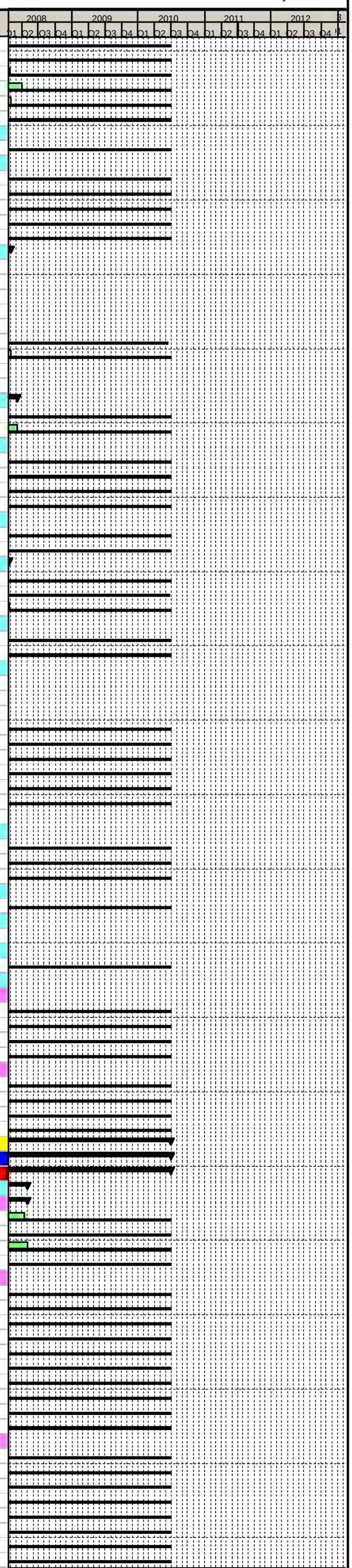

Primary Baseline
Actual Work
Remaining Work
Critical Remaining Work
Baseline Milestone
Milestone

Trams for Edinburgh ..connecting our Capital

Edinburgh Tram Project

SDS FULL DESIGN PROGRAMME @ V26

tie

Activity ID	Activity Name	Original Duration	Start	Finish
SDS59900	tie Approval Period	19d	15-Mar-07 A	13-Apr-07 A
SDS70930	Receive tie Comments	0d	19-Apr-07 A	
Trackform & Surface Finish Plans & Schedules		378d	20-Feb-06 A	10-Aug-07 A
SDS22300	Issue Schedule of Trackforms to tie	0d		26-May-06 A
SDS22310	tie Approval Period	19d	30-May-06 A	26-Jun-06 A
SDS22320	Update to tie Comments	5d	27-Jun-06 A	03-Jul-06 A
SDS22330	Re-Issue Schedule of Trackforms to tie	0d		03-Jul-06 A
SDS22690	Produce Schedule of Trackforms	63d	20-Feb-06 A	26-May-06 A
SDS35060	Produce Final Trackform/Surface Finish Plans & Schedules	125d	29-Jan-07 A	07-Aug-07 A
SDS35070	Issue Final Trackform/Surface Finish Plans & Schedules to tie	0d		10-Aug-07 A
Civils Support to Trackform Design		396d	07-Aug-06 A	29-Feb-08
SDS63610	Civils Support to Trackform Design	368d	07-Aug-06 A	29-Feb-08
Wheel / Rail Interface Report		398d	13-Mar-06 A	28-Sep-07 A
SDS22610	Produce Wheel / Rail Interface Report	67d	13-Mar-06 A	23-Jun-06 A
SDS24320	Issue Wheel / Rail Interface Report to tie	0d		23-Jun-06 A
SDS24330	tie Approval Period	19d	26-Jun-06 A	21-Jul-06 A
SDS24340	Update to tie Comments	5d	24-Jul-06 A	28-Jul-06 A
SDS24350	Re-Issue Wheel / Rail Interface Report to tie	0d		28-Jul-06 A
SDS35080	Produce Final Wheel/Rail Interface Report	17d	03-Sep-07 A	26-Sep-07 A
SDS35090	Issue Final Wheel / Rail Interface Report to tie	0d		28-Sep-07 A
SDS35100	Wheel / Rail Interface Study	128d	31-Jan-07 A	14-Aug-07 A
SDS35170	Receive INFRACO Track Information - (NOT RECEIVED)	0d		07-Sep-07 A
SDS35420	Re-Continue Wheel / Rail Study - (NOT NECESSARY)	16d	15-Aug-07 A	07-Sep-07 A
SDS61500	IDC	2d	27-Sep-07 A	28-Sep-07 A
SDS63590	IDC	2d	24-Jul-06 A	25-Jul-06 A
Assumed Design Tram Vehicle Report		95d	20-Feb-06 A	30-Jun-06 A
SDS22630	Produce Assumed Design Tram Vehicle Report	18d	20-Feb-06 A	16-Mar-06 A
SDS24360	Issue Assumed Design Tram Vehicle Report to tie	0d		16-Mar-06 A
SDS24370	tie Approval Period ** No Comments Received - Activity Closed **	19d	20-Mar-06 A	18-Apr-06 A
SDS24380	Update to tie Comments ** - No Comments Received - Activity Closed **	5d	19-Apr-06 A	25-Apr-06 A
SDS24390	Re-Issue Assumed Design Tram Vehicle Report to tie	0d		30-Jun-06 A
Alignment Criteria		307d	20-Feb-06 A	05-May-07 A
SDS22640	Produce Alignment Criteria	19d	20-Feb-06 A	17-Mar-06 A
SDS22650	tie Approval Period ** No Comments Received - Activity Closed **	19d	20-Mar-06 A	18-Apr-06 A
SDS22660	Update to tie Comments ** No Comments Received - Activity Closed **	4d	19-Apr-06 A	24-Apr-06 A
SDS22670	Issue Alignment Criteria to tie	0d		17-Mar-06 A
SDS22680	Re-Issue Alignment Criteria to tie	0d		30-Jun-06 A
SDS35160	Produce Final Track Alignment Criteria	47d	06-Dec-06 A	21-Feb-07 A
SDS35180	Issue Final Track Alignment Criteria to tie	0d		21-Feb-07 A
SDS59960	tie Approval Period	19d	22-Feb-07 A	21-Mar-07 A
SDS59970	Update to tie Comments	1d	04-May-07 A	05-May-07 A
SDS61770	IDC	2d	19-Feb-07 A	20-Feb-07 A
SDS70940	Receive tie Comments	0d	30-Mar-07 A	
Structure Gauge & Clearances Drawings		338d	24-Apr-06 A	20-Aug-07 A
SDS22490	Produce Structure Gauge & Clearances Drawings	8d	24-Apr-06 A	05-May-06 A
SDS22500	tie Approval Period	19d	05-May-06 A	05-Jun-06 A
SDS22510	Update to tie Comments	18d	06-Jun-06 A	30-Jun-06 A
SDS22520	Issue Structure Gauge & Clearances Drawings to tie	0d		05-May-06 A
SDS22530	Re-Issue Structure Gauge & Clearances Drawings to tie	0d		30-Jun-06 A
SDS35140	Produce Final Structure Gauge & Clearance Drawings	16d	18-Dec-06 A	17-Jan-07 A
SDS35150	Issue Final Structure Gauge & Clearance Drawings to tie	0d		02-Apr-07 A
SDS59990	tie Approval Period	19d	23-Jan-07 A	19-Feb-07 A
SDS70950	Receive tie Comments	0d	18-Apr-07 A	
SDS71000	Update to tie Comments	5d	09-Aug-07 A	16-Aug-07 A
SDS71010	Re-Issue Structure Gauge Drawings	0d		20-Aug-07 A
Trackform Typical Cross Sections & Details		398d	13-Mar-06 A	28-Sep-07 A
SDS22590	Prepare Preliminary Cross Sections	74d	13-Mar-06 A	22-Jun-06 A
SDS24200	Issue Preliminary Cross Sections to tie	0d		23-Jun-06 A
SDS24210	tie Approval Period	19d	23-Jun-06 A	21-Jul-06 A
SDS24220	Update to tie Comments	5d	24-Jul-06 A	28-Jul-06 A
SDS24230	Re-Issue Preliminary Cross Sections to tie	0d		28-Jul-06 A
SDS35190	Develop Trackfrorms with On Going tie Review	110d	07-Aug-06 A	25-Jan-07 A
SDS35200	Receipt of ties Agreement to Trackforms	0d		25-Jan-07 A
SDS35210	Produce Final Trackform Cross Sections & Details	158d	29-Jan-07 A	26-Sep-07 A
SDS35220	Issue Final Trackform Cross Sections & Details	0d		28-Sep-07 A
Trackwork Specification		368d	24-Apr-06 A	28-Sep-07 A
SDS22620	Produce Draft Trackwork Specification	44d	24-Apr-06 A	22-Jun-06 A
SDS24240	Issue Draft Trackwork Specification to tie	0d		23-Jun-06 A
SDS24250	tie Approval Period	19d	23-Jun-06 A	21-Jul-06 A
SDS24260	Update to tie Comments	5d	24-Jul-06 A	28-Jul-06 A
SDS24270	Re-Issue Draft Trackwork Specification to tie	0d		28-Jul-06 A
SDS24470	Produce Final Trackwork Specification	163d	11-Jan-07 A	18-Sep-07 A
SDS35230	Issue Final Trackwork Specification to tie	0d		28-Sep-07 A
Switches & Crossing Design		342d	15-May-06 A	13-Sep-07 A
SDS22340	Produce Draft Switches & Crossing Preliminary Design	23d	15-May-06 A	16-Jun-06 A
SDS22350	tie Approval Period	19d	03-Jul-06 A	28-Jul-06 A
SDS22360	Update to tie Comments	5d	31-Jul-06 A	04-Aug-06 A
SDS22370	Issue Draft Switches & Crossing Preliminary Design to tie	0d		30-Jun-06 A
SDS22380	Re-Issue Draft Switches & Crossing Preliminary Design to tie	0d		04-Aug-06 A
SDS35380	Produce Final S&C Layout Plans	159d	11-Jan-07 A	12-Sep-07 A
SDS35390	Issue Final S&C Layout Plans to tie	0d		13-Sep-07 A
SDS61590	IDC (NOT REQUIRED)	1d	12-Sep-07 A	12-Sep-07 A
Schedule of Geometry Speed Restrictions		22d	02-Jan-07 A	01-Feb-07 A
SDS22390	Produce Schedule of Geometry Speed Restrictions (Now Inc On Track Alignment Drawings)	22d	02-Jan-07 A	01-Feb-07 A
Rail Section Schedule		97d	10-Apr-07 A	22-Aug-07 A
SDS35240	Produce Rail Section Schedule	89d	10-Apr-07 A	22-Aug-07 A
SDS35250	Issue Rail Section Schedule to tie	0d		22-Aug-07 A
Rail Grade Schedule		97d	10-Apr-07 A	22-Aug-07 A
SDS35260	Produce Rail Grade Schedule	89d	10-Apr-07 A	22-Aug-07 A
SDS35270	Issue Rail Grade Schedule to tie	0d		22-Aug-07 A
Rail Movement Joint Schedule		246d	04-Sep-06 A	22-Aug-07 A
SDS35280	Produce Rail Movement Joint Schedule	228d	04-Sep-06 A	22-Aug-07 A
SDS35290	Issue Rail Movement Joint Schedule to tie	0d		22-Aug-07 A
Check Rail Schedule		97d	10-Apr-07 A	22-Aug-07 A
SDS35300	Produce Check Rail Schedule	89d	10-Apr-07 A	22-Aug-07 A
SDS35310	Issue Check Rail Schedule to tie	0d		22-Aug-07 A
Guard Rail Schedule		97d	10-Apr-07 A	22-Aug-07 A
SDS35320	Produce Guard Section Schedule	89d	10-Apr-07 A	22-Aug-07 A
SDS35330	Issue Guard Section Schedule to tie	0d		22-Aug-07 A
Vehicle Arrestment Schedule		124d	02-Mar-07 A	22-Aug-07 A
SDS35340	Produce Vehicle Arrestment Schedule	113d	02-Mar-07 A	22-Aug-07 A
SDS35350	Issue Vehicle Arrestment Schedule to tie	0d		22-Aug-07 A
Isolatable Rail Joint Schedule		97d	10-Apr-07 A	22-Aug-07 A

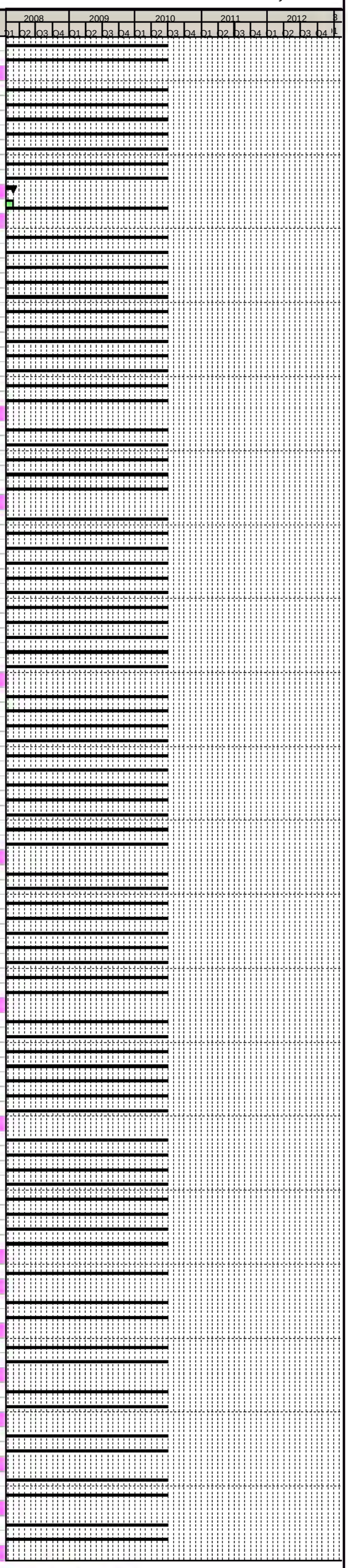

Primary Baseline
Actual Work
Remaining Work
Critical Remaining Work
Baseline Milestone
Milestone

Trams for Edinburgh ..connecting our Capital

Edinburgh Tram Project

SDS FULL DESIGN PROGRAMME @ V26

tie

Activity ID	Activity Name	Original Duration	Start	Finish
SDS35360	Produce Isolatable Rail Joint Schedule	89d	10-Apr-07 A	22-Aug-07 A
SDS35370	Issue Isolatable Rail Joint Schedule to tie	0d		22-Aug-07 A
Vehicle Tenderers		419d	24-Jul-06 A	19-Mar-08
SDS36790	Review Information Received from Vehicle Tenderers	23d	24-Jul-06 A	25-Aug-06 A
SDS36900	Provide Input to Vehicle Procurement Process	265d	31-Jul-06 A	14-Sep-07 A
SDS37050	Revise Alignment Criteria	18d	14-Jan-08*	07-Feb-08
SDS37080	Revise Design DKE	18d	14-Jan-08*	07-Feb-08
SDS37090	Revise Alignment	27d	08-Feb-08	19-Mar-08
SDS37100	Revise Wheel Rail Interface Study	18d	14-Jan-08*	07-Feb-08
SDS37110	Revise Tramway Category Plans	36d	14-Jan-08*	05-Mar-08
SDS37120	Revise Tramway Cross Sections	18d	14-Jan-08*	07-Feb-08
SDS37130	Receive Instruction to Revise Design	0d	14-Jan-08*	
Assess Selected Vehicle		15d	14-Jan-08	01-Feb-08
SDS61790	Assess Impact of Selected Vehicle	14d	14-Jan-08	01-Feb-08
SDS61800	Verify Alignment (Run AutoTram)	14d	14-Jan-08	01-Feb-08
SDS79280	Receive Instruction to Assess Selected Vehicle	0d	14-Jan-08*	
Rail Sections		97d	06-Nov-06 A	30-Mar-07 A
SDS36800	Determine Rail Sections	28d	06-Nov-06 A	15-Dec-06 A
SDS37140	Issue Rail Section Report to tie	0d		22-Dec-06 A
SDS37150	Produce Rail Section Report	19d	27-Nov-06 A	22-Dec-06 A
SDS60290	tie Approval Period	19d	05-Jan-07 A	01-Feb-07 A
SDS61680	IDC	8d	12-Dec-06 A	22-Dec-06 A
SDS61810	Input to Wheel Interface Report	0d		22-Dec-06 A
SDS70960	Receive tie Comments	0d	30-Mar-07 A	
Rail Grades		188d	06-Nov-06 A	03-Aug-07 A
SDS36810	Determine Rail Grades	173d	06-Nov-06 A	03-Aug-07 A
SDS37160	Input to Wheel Interface Report	0d		03-Aug-07 A
Guard Rails		189d	20-Nov-06 A	20-Aug-07 A
SDS36860	Produce Guard Rail Drawings	15d	20-Nov-06 A	11-Dec-06 A
SDS37170	Issue Guard Rail Drawings to tie	0d		15-Dec-06 A
SDS60320	tie Approval Period	24d	18-Dec-06 A	30-Jan-07 A
SDS60330	Update to tie Comments	13d	31-Jan-07 A	19-Feb-07 A
SDS60340	Re-Issue Guard Rail Schedule to tie	0d		19-Feb-07 A
SDS61690	IDC	2d	11-Dec-06 A	12-Dec-06 A
SDS75100	Update to tie Comments	5d	09-Aug-07 A	16-Aug-07 A
SDS75110	Re-Issue Structure Gauge Drawings	0d		20-Aug-07 A
Switching & Crossing Schedule		97d	10-Apr-07 A	22-Aug-07 A
SDS61710	Produce Switching & Crossing Schedule Drawings	89d	10-Apr-07 A	22-Aug-07 A
SDS61720	Issue Switching & Crossing Schedule to tie	0d		22-Aug-07 A
SDS61760	IDC	7d	13-Aug-07 A	21-Aug-07 A
Surveys		583d	29-Sep-05 A	11-Jan-08 A
A10390	Structures Condition Survey	92d	29-Sep-06 A	21-Feb-07 A
A10400	VO65 Additional Topographical Survey	183d	25-Sep-06 A	06-Jul-07 A
A10410	Void Locations, Cellars and Basement Survey	150d	09-Oct-06 A	01-Jun-07 A
A10420	Archaeological Survey Work Package 1	83d	03-Jul-06 A	03-Nov-06 A
A10430	Archaeological Survey Work Package 2	81d	03-Jul-06 A	31-Oct-06 A
A10440	Archaeological Survey Work Package 3	160d	03-Jul-06 A	07-Mar-07 A
A10450	Geotechnical Survey	331d	03-Jul-06 A	23-Nov-07 A
A10460	Ecological Survey - Bat Survey For Structures	76d	01-Nov-06 A	01-Mar-07 A
A10470	Norwest Holst Issue Final Factual Report	0d		23-Nov-07 A
A10480	Ecological Survey - Bat Survey For Trees	60d	16-Oct-06 A	19-Jan-07 A
S001	Road Condition Surveys	96d	09-Oct-06 A	28-Feb-07 A
S002	Utilities Apparatus (GPR Surveys)	175d	25-Oct-05 A	03-Jul-06 A
S003	Geotechnical Surveys	169d	01-Nov-05 A	30-Jun-06 A
S006	Topographical Surveys	192d	29-Sep-05 A	30-Jun-06 A
S007	Hydrological Surveys	65d	13-Feb-06 A	12-May-06 A
S008	Archaeological Surveys	128d	04-Jan-06 A	30-Jun-06 A
S010	Structures Conditional Surveys	192d	29-Sep-05 A	30-Jun-06 A
S011	Network Rail Asset Survey	140d	12-Dec-05 A	30-Jun-06 A
S013	Noise and Vibration Surveys	170d	31-Oct-05 A	30-Jun-06 A
S016	Frontager Surveys	74d	20-Dec-05 A	07-Apr-06 A
S017	Radio Surveys	207d	08-Aug-06 A	01-Jun-07 A
S021	EMC Third Party Surveys	55d	17-Apr-06 A	30-Jun-06 A
S022	Stray Currents Survey (To Be Done For Construction Only)	1d	01-May-06 A	02-May-06 A
S046	Environmental & Ecological Surveys	88d	15-Feb-06 A	30-Jun-06 A
S077	Void Locations, Cellars & Basements	173d	03-Oct-05 A	30-Jun-06 A
S087	Utilities Trial Pits	145d	15-Oct-06 A	01-Jun-07 A
VO30 Earl Ground Investigation CNS013		5d	30-Oct-06 A	03-Nov-06 A
VO1420	Earl Ground Investigation - Management Support	5d	30-Oct-06 A	03-Nov-06 A
VO35 Additional Noise and Vibration Survey		56d	06-Dec-06 A	02-Mar-07 A
A13030	Additional Noise and Vibration Monitoring	53d	06-Dec-06 A	02-Mar-07 A
VO36 Additional Invasive Species Surveys		52d	04-Sep-06 A	14-Nov-06 A
A13240	Additional Invasive Species Surveys	49d	04-Sep-06 A	14-Nov-06 A
VO49 Additional Survey Granton to Newhaven Road		202d	06-Dec-06 A	24-Sep-07 A
A10640	Additional Ground Investigation Survey from Granton to Newhaven Road	186d	06-Dec-06 A	24-Sep-07 A
VO64 Site Notification Letters		202d	06-Dec-06 A	24-Sep-07 A
A12200	Site Notification Letters	186d	06-Dec-06 A	24-Sep-07 A
VO232 Ground Investigation Gogar Additional Costs due to UXO		13d	17-Dec-07 A	11-Jan-08 A
VO2740	Additional Ground Investigation at Gogar due to UXO	13d	17-Dec-07 A	11-Jan-08 A
Modelling (Task200.2)		709d	19-Sep-05 A	25-Jun-08
Traffic Modelling (Task 200.2.1)		709d	19-Sep-05 A	25-Jun-08
A487008	DD - Traffic Management	409d	03-Jul-06 A	31-Mar-08
SDS18860	Prepare and Issue Planning & Design Specifications	20d	19-Sep-05 A	17-Oct-05 A
SDS18870	Determine Additional Survey Requirements	14d	18-Oct-05 A	07-Nov-05 A
SDS18880	Undertake additional Surveys	20d	08-Nov-05 A	06-Dec-05 A
SDS18890	Additional survey analysis	50d	07-Dec-05 A	27-Feb-06 A
SDS18900	Additional surveys complete	0d		04-Jan-06 A
SDS18910	Network Coding Including PT	92d	18-Oct-05 A	10-Mar-06 A
SDS18920	Traffic Assignment Flows	49d	05-Jan-06 A	17-Mar-06 A
SDS18930	Final Calibration of Model / Initial Performance Testing	68d	17-Jan-06 A	28-Apr-06 A
SDS42950	PD - Management	116d	04-Jan-06 A	30-Jun-06 A
Model Based On Preliminary Design		78d	27-Jul-06 A	13-Nov-06 A
SDS55940	JRC Revise Traffic Flows Using Full VISSIM/VISUM Modelling Suite	24d	10-Aug-06 A	15-Sep-06 A
SDS55980	SDS Prepare LINSIG/TRANSYT Final Signal Timing & Junction Layouts (Iteration 3)	21d	31-Aug-06 A	29-Sep-06 A
SDS56000	Issue Patronage/Revenue Forecasts to tie (For Issue Of Business Case to Scottish Executive)	0d		13-Oct-06 A
SDS56010	Possible Amendments to SDS LINSIG/TRANSYT Signal Timing & Junction Layouts (Iteration 4)	9d	18-Sep-06 A	29-Sep-06 A
SDS56110	JRC Prepare Entire Route Final VISSIM/VISSUM Analysis	10d	18-Sep-06 A	02-Oct-06 A
SDS56120	JRC Prepare Patronage/Revenue Forecast for Business Case	5d	02-Oct-06 A	06-Oct-06 A
SDS56920	JRC Update VISSIM Model	5d	27-Jul-06 A	02-Aug-06 A
SDS56930	SDS Prepare LINSIG/TRANSYT Analysis (Iteration 2)	5d	03-Aug-06 A	09-Aug-06 A
SDS56940	SDS Reporting	8d	23-Oct-06 A	02-Nov-06 A
SDS56950	SDS Issue Modelling Report to tie	0d		17-Oct-06 A
SDS56960	tie Approval Period	19d	17-Oct-06 A	13-Nov-06 A

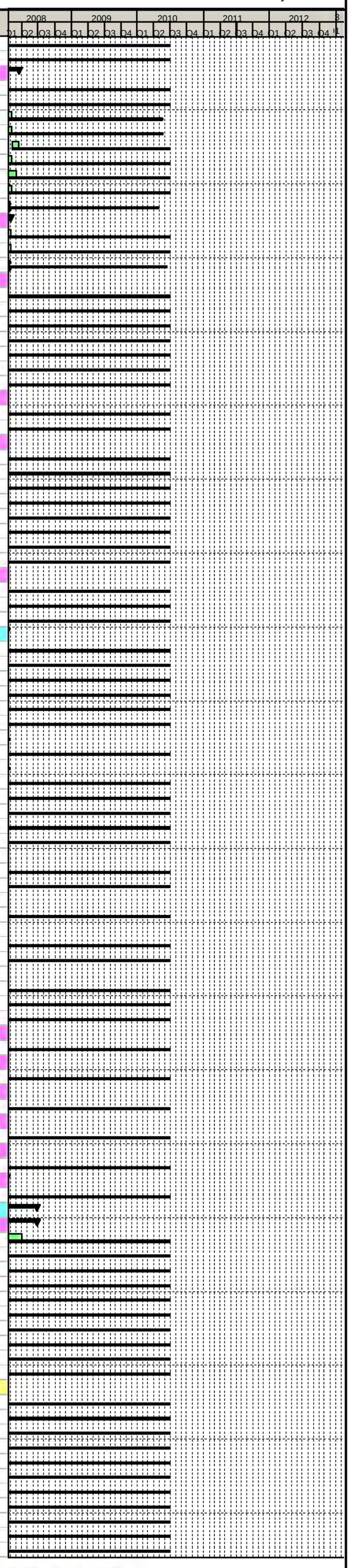

Primary Baseline
Actual Work
Remaining Work
Critical Remaining Work
Baseline Milestone
Milestone

Trams for Edinburgh ..connecting our Capital

Edinburgh Tram Project

SDS FULL DESIGN PROGRAMME @ V26

tie

Activity ID	Activity Name	Original Duration	Start	Finish
SDS57010	SDS Provide Parameters to TPi to enable Calc of Runtime	0d		23-Oct-06 A
Traffic Modelling First Pass		167d	02-Jul-07 A	28-Feb-08
SDS68140	H1: VISSM: Complete Airport section models and review way Granton Waterfron is modelled	83d	10-Sep-07 A	18-Jan-08
SDS68530	F: VISSIM model areas 1 and 2 review, espeically way Foot of the Walk is modelled	99d	15-Aug-07 A	18-Jan-08
SDS74120A	A: Code most of VISUM and models 7&8 VISSIM, run VISUM, cordon flows to VISSIM and run test 1	9d	02-Jul-07 A	13-Jul-07 A
SDS74130B	B: Discuss test 1 results with CEC, tie and TEL. Get direction on tests 2 and 3	5d	16-Jul-07 A	20-Jul-07 A
SDS74140C	C: Recode VISSIM models 7 & 8 to reflect changes for test 2 and 3 and run	5d	23-Jul-07 A	27-Jul-07 A
SDS74150D	D: Discuss test 2 and 3 results with CEC, tie and TEL. Get direction on final changes	12d	27-Jul-07 A	14-Aug-07 A
SDS74150D1	Issue Notification of Phase Completion Letter to tie (Activity D)	0d		24-Sep-07 A
SDS74150D11	Issue Notification of Phase Completion Letter to tie (Activity F)	0d		24-Sep-07 A
SDS74160E	E:Code VISSIM areas 1 and 2, cordon flows from first VISUM run, and run models 1 and 2	9d	09-Jul-07 A	20-Jul-07 A
SDS74170F	F: Discuss results of model areas 1 and 2 with CEC/TELand get direction on final changes	16d	23-Jul-07 A	14-Aug-07 A
SDS74180G	G: Run LINSIG for Leith Walk - junctions not previously modelled, pass timings to Main iteration VISUM and VISSIM models	115d	23-Jul-07 A	18-Jan-08
SDS74190H	H: Code remaining VISSIM model areas, cordon flows from first VISUM run, and run remaining VISSIM models	37d	16-Jul-07 A	07-Sep-07 A
SDS74200I	I: VISSIM: Discuss model changes with tie/CEC and get sign off	5d	21-Jan-08	25-Jan-08
SDS74210J	J: Code remaining tram route in VISUM not coded in task A (ie Granton, Forth Ports) and incorporate results of D, F & I	37d	16-Jul-07 A	07-Sep-07 A
SDS74300	R1: Confirmation of junction designs to model (except Forth Ports area) inc Picardy Pl, Torphichen Pl, Frederick St	5d	21-Jan-08	25-Jan-08
SDS81770	H2: VISSIM: Any Further modelling required e.g. Picardy Place	83d	10-Sep-07 A	18-Jan-08
SDS81780	H3: VISSIM: Complete any other changes	83d	10-Sep-07 A	18-Jan-08
SDS81790	H4: Linsig: Pass 1 of Airport section junctions	11d	07-Jan-08 A	22-Jan-08
SDS81800	R2: Input design Changes to VISUM, VISSIM	32d	14-Jan-08	28-Feb-08
SDS81810	R3: Input Linsig Pass 1 timings into VISUM/VISSIM	32d	14-Jan-08	28-Feb-08
Main Traffic Model Iteration		366d	22-Jan-07 A	25-Jun-08
SDS67680	Issue Traffic Modelling Update Report to tie (& Approval From CEC)	0d		13-May-08
SDS69490	S: Run AM, Interpeak & PM VISUM/VISSIM Models. Feed Traffic Data Into LINSIGs & TRANSIT	14d	29-Feb-08	20-Mar-08
SDS69500	CEC Approval Of Traffic Modelling Report	19d	14-May-08	11-Jun-08
SDS69530	AF: Create Individual Junction LINSIG Models Using Detailed Geometry	248d	22-Jan-07 A	08-Feb-08
SDS69540	AG: Run AM, Interpeak & PM Peak LINSIGs Using Output From VISSIM Models	14d	07-Mar-08	31-Mar-08
SDS69550	AI: TRANSYT: review detailed geometry and make any design changes	248d	22-Jan-07 A	08-Feb-08
SDS69560	AJ: Strategic TRANSYT: Input Traffic Flows From VISSIM	23d	07-Mar-08	14-Apr-08
SDS69570	AK: Run AM, Interpeak & PM Peak TRANSYT Using Output From LINSIG Models	9d	15-Apr-08	28-Apr-08
SDS69580	AM Produce Junction Assessment Report for CEC	38d	14-Mar-08	13-May-08
SDS69590	Update Modelling Report To Any CEC Comments	9d	12-Jun-08	25-Jun-08
SDS70890	AH: Tram ' Green Wave': identify junctions where tram signal stages need adjusting	19d	14-Mar-08	14-Apr-08
SDS81820	AE: Linsig Pass 2: Review intergreens and braking times for tram minimum green times	37d	10-Dec-07 A	08-Feb-08
VO245 Revised Modelling Scope including Wider Area Modelling		56d	03-Sep-07 A	19-Nov-07 A
SDS74230K	K: Identify wider area junction issues and possible solutions to model	53d	03-Sep-07 A	19-Nov-07 A
Model Based On Preliminary Design Inc. Charettes		166d	02-Jan-07 A	22-Aug-07 A
SDS68490	tie/CEC Provide Comments On VISUM/VISSIM Cal/Val Reports	117d	02-Jan-07 A	29-Jun-07 A
SDS68500	Refinements to Models	117d	02-Jan-07 A	29-Jun-07 A
SDS68510	Future Development Area Trips eg Waterfront	50d	12-Feb-07 A	27-Apr-07 A
SDS68520	Traffic Counts At Junctions Previously Not Counted	68d	15-Jan-07 A	27-Apr-07 A
SDS69520	AE: Calc Braking Times In Order To Calc Tram Stage Min Green Times, and Tram Post-intergreen Times	95d	29-Mar-07 A	22-Aug-07 A
Design & Junction Modelling Iterations		72d	19-Oct-06 A	06-Feb-07 A
SDS60600	LINSIG Modelling for Section 2A & Discuss Changes With Junction Designer	5d	19-Oct-06 A	25-Oct-06 A
SDS60610	LINSIG Modelling for Section 3A & Discuss Changes With Junction Designer	1d	08-Jan-07 A	08-Jan-07 A
SDS60620	LINSIG Modelling for Section 3B & Discuss Changes With Junction Designer	5d	08-Jan-07 A	12-Jan-07 A
SDS60630	LINSIG Modelling for Section 3C & Discuss Changes With Junction Designer	5d	31-Jan-07 A	06-Feb-07 A
SDS60650	LINSIG Modelling for Section 5B & Discuss Changes With Junction Designer	2d	05-Jan-07 A	08-Jan-07 A
SDS60670	LINSIG Modelling for Section 7A & Discuss Changes With Junction Designer	1d	20-Dec-06 A	20-Dec-06 A
Tram Simulation (Task 200.2.2)		595d	29-Nov-05 A	31-Mar-08
M01020	Run Time Modelling - Issue 1	0d		29-Nov-05 A
M01030	VO60 General Runtime Modelling Assistance	157d	29-Aug-06 A	30-Apr-07 A
Stage 3 - Operational Simulations for Preliminary Design		441d	14-Jun-06 A	12-Mar-08
Modelling Including Section 4		116d	03-Jul-06 A	11-Dec-06 A
SDS24090	Review of Operational Principles	4d	03-Jul-06 A	06-Jul-06 A
SDS24100	Review of Technical Data	3d	07-Jul-06 A	11-Jul-06 A
SDS24110	Line 1 - Pway Modeling	5d	19-Jul-06 A	25-Jul-06 A
SDS24120	Line 1 - Road Modelling	2d	26-Jul-06 A	27-Jul-06 A
SDS24150	Time Table Definition	34d	12-Oct-06 A	30-Nov-06 A
SDS24160	Produce Discussion Simulation Report	15d	20-Nov-06 A	11-Dec-06 A
SDS24170	Issue Discussion Simulation Report	0d		11-Dec-06 A
Modelling Excluding Section 4		441d	14-Jun-06 A	12-Mar-08
SDS22860	Review of Operational Principles	57d	29-Oct-07 A	29-Jan-08
SDS22870	Review of Technical Data	63d	22-Oct-07 A	31-Jan-08
SDS22880	Line 1 - Pway Modeling	72d	22-Oct-07 A	13-Feb-08
SDS22890	Line 1 - Road Modelling	2d	13-Feb-08	15-Feb-08
SDS22900	Line 2 - Pway Modeling	3d	15-Feb-08	20-Feb-08
SDS22910	Line 2 - Road Junction Modelling	65d	12-Nov-07 A	25-Feb-08
SDS22920	Time Table Definition	2d	25-Feb-08	27-Feb-08
SDS23000	Produce Report of Simulation Results	9d	27-Feb-08	12-Mar-08
SDS23670	Issue Report of Simulation Results to tie	0d		12-Mar-08
SDS52850	Review of Operational Principles	7d	14-Jun-06 A	22-Jun-06 A
SDS52860	Review of Technical Data	8d	14-Jun-06 A	23-Jun-06 A
SDS52870	Line 1 - Pway Modeling	9d	19-Jun-06 A	30-Jun-06 A
SDS52890	Line 2 - Pway Modeling	3d	03-Jul-06 A	05-Jul-06 A
SDS52910	Time Table Definition	2d	06-Jul-06 A	07-Jul-06 A
SDS52920	Produce Report of Simulation Results	4d	10-Jul-06 A	13-Jul-06 A
SDS52930	Issue Report of Simulation Results	0d		13-Jul-06 A
SDS67690	Update Simulation Report To Incorporate tie Comments	6d	20-Nov-06 A	27-Nov-06 A
SDS67700	Receive tie Comments For Simulation Results Report	0d		20-Nov-06 A
SDS67710	Re-Issue Report of Simulation Results	0d		27-Nov-06 A
SDS67720	Update Of Runtime Model To Reflect Charette Changes	62d	22-Jan-07 A	25-Apr-07 A
SDS67730	Issue Runtime Model To Reflect Charette Changes	0d		25-Apr-07 A
SDS81000	Sim Support Hours	79d	22-Oct-07 A	25-Feb-08
Stage 4 - Traction Power		479d	10-May-06 A	31-Mar-08
SDS23010	Line 1 & 2 Traction Power Modeling	71d	10-May-06 A	24-Aug-06 A
SDS23020	Produce Report of Traction Power Results	2d	23-Aug-06 A	24-Aug-06 A
SDS23030	Outages Work and Development	2d	23-Aug-06 A	24-Aug-06 A
SDS23040	Updates to Network & Reporting	1d	24-Aug-06 A	24-Aug-06 A
SDS24030	Issue Traction Power Simulation Report Internally Only	0d		24-Aug-06 A
SDS52940	Line 1 & 2 Traction Power Modeling	84d	05-Nov-07 A	17-Mar-08
SDS52950	Produce Report of Traction Power Results	2d	17-Mar-08	19-Mar-08
SDS52960	Outages Work and Development	4d	19-Mar-08	27-Mar-08
SDS52970	Updates to Network & Reporting	2d	27-Mar-08	31-Mar-08
SDS52980	Issue Traction Power Simulation Report	0d		31-Mar-08
SDS66680	Power Team Review Traction Power Simulation Report (PD)	17d	02-Aug-06 A	25-Aug-06 A
SDS66690	Modelling Team Incorporate Power Comments Onto Traction Power Simulation Report (PD)	9d	05-Oct-06 A	18-Oct-06 A
SDS66700	Issue Traction Power Simulation Report (PD) to tie	0d		18-Oct-06 A
SDS67550	Power Team Review Traction Power Simulation Report (DD)	25d	29-Aug-06 A	04-Oct-06 A
SDS67740	tie Approval Period	19d	19-Oct-06 A	15-Nov-06 A
SDS67750	Re-Issue Traction Power Simulation Report (PD) to tie	0d		26-Apr-07 A
SDS67760	Update to tie Comments	69d	11-Jan-07 A	26-Apr-07 A

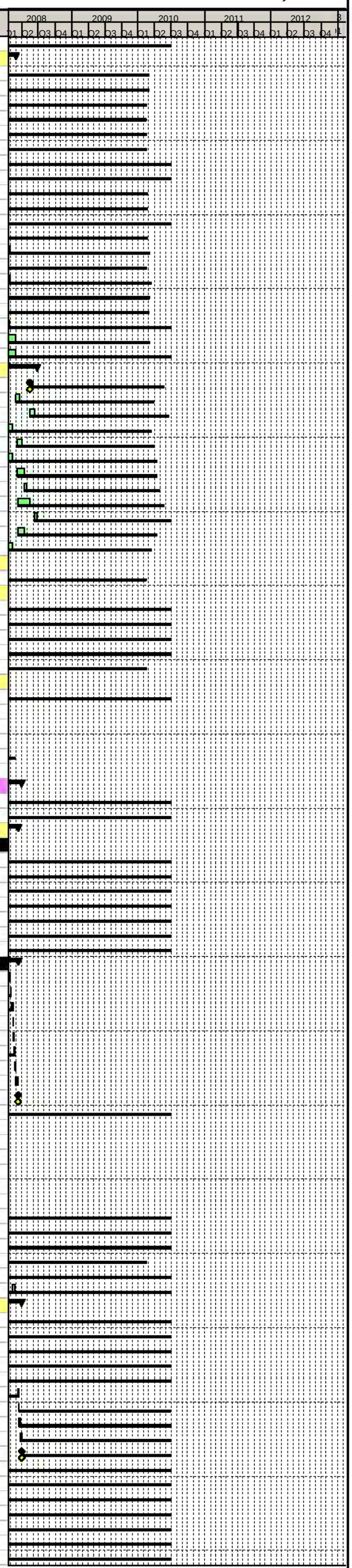

Primary Baseline
Actual Work
Remaining Work
Critical Remaining Work
Baseline Milestone
Milestone

Trams for Edinburgh ..connecting our Capital

Edinburgh Tram Project

SDS FULL DESIGN PROGRAMME @ V26

tie

Activity ID	Activity Name	Original Duration	Start	Finish
VO80 Simulation of Proposed Trams (Not tie Approved)		49d	07-Feb-07 A	16-Apr-07 A
SDS69980	Agree Inputs	5d	07-Feb-07 A	13-Feb-07 A
SDS70000	Input, testing and check Inputs	4d	14-Feb-07 A	19-Feb-07 A
SDS70010	Runtime Results preparation and issue	1d	20-Feb-07 A	20-Feb-07 A
SDS70020	Timetable definition to allow traction power review of substation loadings	8d	21-Feb-07 A	03-Mar-07 A
SDS70030	Run and check outputs	3d	07-Mar-07 A	09-Mar-07 A
SDS70040	Reporting	23d	11-Mar-07 A	16-Apr-07 A
VO82 Additional Runtime Modelling (Sector 3 in and out) (Not tie Approved)		97d	12-Dec-06 A	04-May-07 A
SDS69600	Traction Power Review for Looped Model	6d	12-Dec-06 A	19-Dec-06 A
SDS69610	Results And Report Production (Stage 4.1)	84d	20-Dec-06 A	04-May-07 A
SDS69620	Model Build & Timetable Development For Phase 1A Scheme Model	76d	12-Dec-06 A	13-Apr-07 A
SDS70280	Reporting of Phase 1A Scheme Model (TIE4D)	12d	02-Apr-07 A	20-Apr-07 A
SDS70290	Issue Discussion Simulation Report	0d		20-Apr-07 A
Wider Area Traffic Signal Design		256d	02-Jul-07 A	02-Jul-08
Preliminary Design of Wider Area Traffic Signals		153d	02-Jul-07 A	08-Feb-08
SDS74320T	T: For junctions likely to be affected prepare existing signal data ready for review	193d	02-Jul-07 A	14-Jan-08
SDS74330U	U: For simple changes - check if infrastructure will cope	14d	14-Jan-08	01-Feb-08
SDS74340V	V: For simple changes - summarise changes required	5d	28-Jan-08	01-Feb-08
SDS74350W	W: For more complex changes: Run Linsig (and possibly Transyt) to confirm detailed signalling arrangements	5d	04-Feb-08	08-Feb-08
Detailed Design of Traffic Signals		141d	10-Dec-07 A	02-Jul-08
SDS70900AN	AN: Establish First Calculated Tram Loop Positions	27d	10-Dec-07 A	25-Jan-08
SDS81840	AO1: VISUM/VISSIM Incorporate Forth Ports design into VISUM and VISSIM	28d	24-Jan-08	05-Mar-08
SDS81850	AO2: VISUM/VISSIM Incorporate off set signals timings from Transyt	9d	29-Apr-08	13-May-08
SDS81860	AO3: VISUM/VISSIM Incorporate Wider Area Transyt modelling results	52d	28-Jan-08	15-Apr-08
SDS81870	AO4: VISSIM Incorporate calculated loop positions in VISVAP programme	52d	28-Jan-08	15-Apr-08
SDS81880	AO5: VISUM Re-run and cordon down traffic flows	9d	14-May-08	28-May-08
SDS81890	AO6: Establish simulated tram loop positions utilising VISSIM	23d	29-May-08	02-Jul-08
Geotechnical		540d	25-Jan-06 A	10-Mar-08
A4160	Prepare Tender Documents for Ground Investigation	46d	25-Jan-06 A	04-Apr-06 A
A52010	Agree Extent of Ground Investigation	5d	29-Mar-06 A	04-Apr-06 A
A52020	Procure Ground Investigation	28d	05-Apr-06 A	19-May-06 A
A52120	Proposal for Ground Investigation	2d	27-Mar-06 A	28-Mar-06 A
A52510	Photographic & Visual Survey & Produce Report	5d	20-Mar-06 A	24-Mar-06 A
SDS79030	Prepare Detailed Design Submission of Cuttings and Embankment Register	75d	12-Nov-07 A	10-Mar-08
SDS79040	Prepare Series 600 Appendix	75d	12-Nov-07 A	10-Mar-08
SDS79050	Issue Cuttings and Embankment Register to tie V2	0d		10-Mar-08
SDS79060	Issue Series 600 Appendix to tie	0d		10-Mar-08
SDS79070	Prepare Summarising Geotechnical Report	195d	31-Jan-07 A	23-Nov-07 A
SDS79080	Issue Summarising Geotechnical Report to tie	0d		23-Nov-07 A
SDS81350	Issue of Cuttings and Embankment Register to tie V1	0d		21-Dec-07 A
System Management		117d	19-Sep-05 A	28-Feb-06 A
A0020008	System Wide Costs	93d	19-Sep-05 A	01-Feb-06 A
A0020010	Tram & Vehicles	67d	21-Oct-05 A	30-Jan-06 A
A0020018	Update to tie Comments	46d	20-Dec-05 A	28-Feb-06 A
A0092002	Technology Reviews	91d	30-Sep-05 A	10-Feb-06 A
A0093010	Network Rail Asset - Investigation Study	48d	10-Oct-05 A	14-Dec-05 A
A0093020	Requirements Definition Enginerring Activities	48d	10-Oct-05 A	14-Dec-05 A
Environmental (Task 200.3)		1132d	20-Jan-06 A	01-Jul-10
Contaminated Land		269d	08-Jan-07 A	28-Jan-08
A4200	Prepare Contaminated Land Remediation Action Plan	225d	08-Jan-07 A	14-Dec-07 A
A4210	Liaison with Statutory Bodies & General Contamination Issues	197d	19-Feb-07 A	14-Dec-07 A
A4220	Prepare Contaminated Land Remediation Action Plan for Contractor	187d	06-Mar-07 A	14-Dec-07 A
A4230	Issue Contaminated Land Remediation Action Plan to Contractor	0d		28-Jan-08*
General Environmental		290d	20-Feb-06 A	10-Apr-07 A
A4240	Break down Environmental Requirements in relation to STAG drawings	22d	06-Mar-06 A	05-Apr-06 A
A4250	Feed into Design Issues Tracker and Drawings	22d	06-Mar-06 A	05-Apr-06 A
A4260	Consultation with Statutory Consultees (SHN, HS, SEPA, CEC)	85d	20-Feb-06 A	30-Jun-06 A
A4270	Update Environmental Management Plan for Preliminary Design	67d	20-Mar-06 A	30-Jun-06 A
A4690	Update Environmental Management Plan for Detailed Design	128d	03-Jul-06 A	17-Jan-07 A
A4700	Issue Updated Environmental Management Plan for Preliminary Design	0d		30-Jun-06 A
A5060	tie Approval Period	54d	17-Jan-07 A	10-Apr-07 A
A5600	Issue Updated Environmental Management Plan for Detailed Design to tie	0d		17-Jan-07 A
A5820	Update to tie Comments As Required	0d	10-Apr-07 A	10-Apr-07 A
A5830	Re-Issue Updated Environmental Management Plan for Detailed Design to tie	0d		10-Apr-07 A
Ecology		1096d	13-Mar-06 A	01-Jul-10
Design Surveys		254d	13-Mar-06 A	12-Mar-07 A
A4400	General Ecological Update/ Walkover report	57d	03-Apr-06 A	30-Jun-06 A
A4410	Protected Species Surveys (otter, Water Vole, Badgers and Bats)	49d	17-Apr-06 A	30-Jun-06 A
A4420	Produce Protected Species Mitigation Strategy (With SNH Consultation)	75d	04-Sep-06 A	22-Dec-06 A
A4430	Further Tree Surveys (Results to Be Passed To Site Clearance Schedule Teams)	98d	09-Oct-06 A	12-Mar-07 A
A4440	Establish Policy for Removal of trees	1d	13-Mar-06 A	13-Mar-06 A
A4480	Mitigation Strategy for treatment of Jap Knotweed & Giant Hogweed	5d	15-Aug-06 A	21-Aug-06 A
A4490	Issue Final Protected Species Mitigation Strategy to tie & SNH	0d		22-Dec-06 A
A5670	Badger or Protected Species License for GI	48d	03-Apr-06 A	16-Jun-06 A
A5680	Issue to tie Mitigation Strategy for Treatment of Jap Knotweed & Giant Hogweed	0d		03-Nov-06 A
A5690	tie Issue Instruction on how to Proceed with Jap Knotweed & Giant Hogweed	43d	29-Aug-06 A	31-Oct-06 A
MUDFA Surveys		5d	25-Jun-10	01-Jul-10
A5630	General Ecological Update/ Walkover report	5d	25-Jun-10	01-Jul-10
INFRACO Surveys		5d	25-Jun-10	01-Jul-10
A5650	General Ecological Update/ Walkover report	5d	25-Jun-10	01-Jul-10
Pre Construction Surveys		31d	23-Mar-07 A	07-May-07 A
A4510	Protected Species Surveys (otter, Water Vole, Badgers and Bats)	9d	23-Mar-07 A	09-Apr-07 A
A4540	Badger or Protected Species License	8d	25-Apr-07 A	07-May-07 A
Archaeological and Cultural Heritage		317d	20-Jan-06 A	18-Apr-07 A
A4550	Review and summary of Environmental Statement	24d	20-Jan-06 A	24-Feb-06 A
A4560	Identify Archaeological & Culture Heritage Works Required by Environmental Statement	24d	27-Jan-06 A	03-Mar-06 A
A4570	Identify Edinburgh Council Archaeologists initial requirements for Arch & Cult Heritage	1d	20-Feb-06 A	20-Feb-06 A
A4590	Produce Table of works required and Location Mapping	2d	21-Feb-06 A	22-Feb-06 A
A4600	Develop Specification for early archaeological monitoring of GI works and infrastructure (IS) works	21d	23-Feb-06 A	24-Mar-06 A
A4610	Develop methodology for full Arch & Cult Heritage investigation works to City Archaeologists Brief	19d	09-Mar-06 A	05-Apr-06 A
A4620	Input into preparation of Tender Documents for early Arch monitoring of GI and IS works	5d	02-Mar-06 A	08-Mar-06 A
A4630	Review and award sub-contractors on Price & WSI's for full Arch & Cult Heritage investigation works	5d	22-May-06 A	26-May-06 A
A4650	Input into preparation of Tender Documents for full Arch & Cult Heritage Investigation works	5d	06-Apr-06 A	12-Apr-06 A
A4660	Review and award sub-contractors on Price & WSI's for early monitoring of GI and SI works	5d	16-May-06 A	22-May-06 A
A4680	Archaeological Management of the monitoring of GI works and Infrastructure (IS) works	149d	29-Aug-06 A	18-Apr-07 A
System & Communications (Task200.5)		677d	19-Sep-05 A	12-May-08
SCC Management (Task200.5.1)		400d	03-Jul-06 A	31-Jan-08
SCC Management		400d	03-Jul-06 A	31-Jan-08
A10530	Management Activity Resources	214d	03-Jul-06 A	31-May-07 A
A14530	Remobilised S&C Resources	48d	01-Oct-07 A	10-Dec-07 A
A14590	S&C Management Resources	32d	10-Dec-07 A	31-Jan-08
SCC Preparation and Information Gathering		35d	03-Jul-06 A	18-Aug-06 A
A10490	Production Of SCC Scope / OPS	33d	03-Jul-06 A	18-Aug-06 A

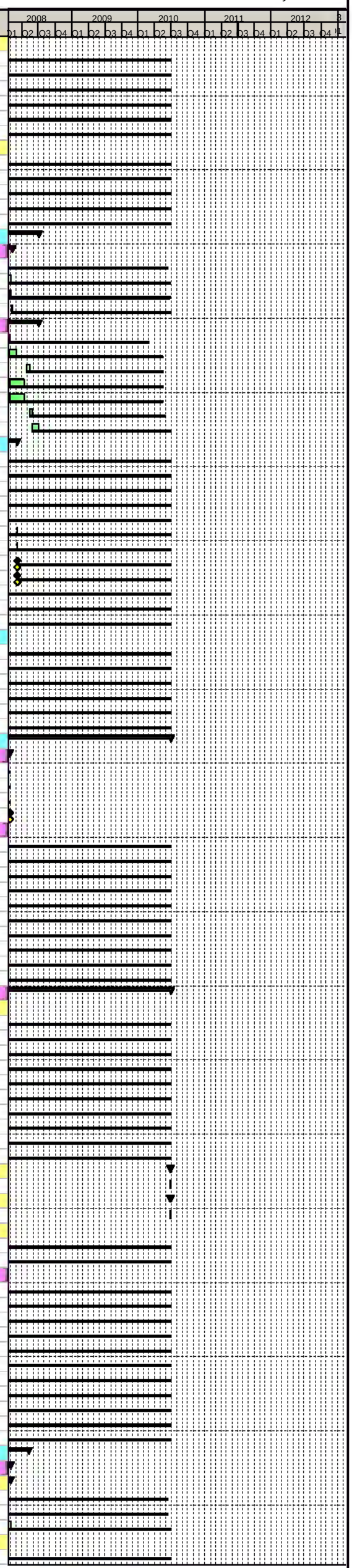

Primary Baseline
Actual Work
Remaining Work
Critical Remaining Work
Baseline Milestone
Milestone

Trams for Edinburgh
..connecting our Capital

Edinburgh Tram Project

SDS FULL DESIGN PROGRAMME @ V26

tie

Activity ID	Activity Name	Original Duration	Start	Finish
A10500	Develop SCC Detailed Design Process	33d	03-Jul-06 A	18-Aug-06 A
A10510	Develop SCC Engineering Plan	33d	03-Jul-06 A	18-Aug-06 A
A10520	Review Programme, Resources and Authority Levels Issued	19d	24-Jul-06 A	18-Aug-06 A
VO234 Additional SCC Support During Design Hold Period (Internal)		104d	08-May-07 A	28-Sep-07 A
A14520	VO234 Support During S&C Demobilisation Period	96d	08-May-07 A	28-Sep-07 A
VO59 Preliminary Design Plus		44d	01-Aug-06 A	29-Sep-06 A
A10540	tie / PB Review Meetings For PD (Original Submission)	2d	05-Sep-06 A	06-Sep-06 A
A10550	Outline PD PLUS Programme, Resources and Hours	1d	07-Sep-06 A	07-Sep-06 A
A10560	Categorise Types of Changes Hours and Allocate Resources	1d	07-Sep-06 A	07-Sep-06 A
A10570	ID Relevant PD x-Discipline Specs and Drawings - Appendix	1d	08-Sep-06 A	08-Sep-06 A
A10580	Direct Signalling Resource Workload - A Williams	2d	08-Sep-06 A	11-Sep-06 A
A10590	Initial Liaison / Initial Works With Depot Safety Assurance and TRA	1d	08-Sep-06 A	11-Sep-06 A
A10600	Add X References With Other Documents	2d	08-Sep-06 A	11-Sep-06 A
A10610	Fibre Layout Drawings (Diverse Route) and Associate Text	6d	08-Sep-06 A	15-Sep-06 A
A10620	Propose Sample Update To Sections x.5 x.6, x.7 x.8 (Incl Meeting)	2d	08-Sep-06 A	11-Sep-06 A
A10630	Highlight Input / Output Text For Interfaces Per Discipline	2d	11-Sep-06 A	12-Sep-06 A
A10650	Do SCC Tram Drawing Update	1d	11-Sep-06 A	11-Sep-06 A
A10660	Minor Edits of Existing Text	1d	12-Sep-06 A	12-Sep-06 A
A10670	Meet With Signalling Resource	1d	12-Sep-06 A	13-Sep-06 A
A10680	Additional Text / Minor Edits (Ex M Reeves Input)	2d	12-Sep-06 A	13-Sep-06 A
A10690	Changes To Comms Sections x.5 x.6, x.7 x.8 (Incl Above)	2d	12-Sep-06 A	13-Sep-06 A
A10700	Identify ODN Text To Remain Un-Touched Revise Or New	1d	13-Sep-06 A	13-Sep-06 A
A10710	Review Of CP Text / Handover Spec From CP To JC	1d	13-Sep-06 A	13-Sep-06 A
A10720	Cross Checks With AP / IB / MR	7d	13-Sep-06 A	21-Sep-06 A
A10730	Pass For Review Changes To Be Made To Date Plus Outline Drawings	2d	13-Sep-06 A	14-Sep-06 A
A10740	Additional Text / Minor Edits (M Reeves Input)	7d	14-Sep-06 A	22-Sep-06 A
A10750	Changes To Signalling Sections x.5 x.6, x.7 x.8	7d	14-Sep-06 A	22-Sep-06 A
A10760	Review TPDS / SCADA Sections	7d	14-Sep-06 A	22-Sep-06 A
A10840	Re-Forecast DD Works / Programme	7d	14-Sep-06 A	22-Sep-06 A
A10850	Feedback From Paul Alliott On Initial Text Changes Pass Any Others	2d	15-Sep-06 A	18-Sep-06 A
A10860	SCC Drawings Update - Comms and Location Based (+)	2d	18-Sep-06 A	19-Sep-06 A
A10880	SCC Drawings Update - Signalling Track Layout (+)	7d	12-Sep-06 A	20-Sep-06 A
A10930	Depot Control Room Layout (Depot Led)	9d	07-Sep-06 A	20-Sep-06 A
A10940	Depot Equipment Room Layout (Depot Led)	1d	20-Sep-06 A	20-Sep-06 A
A11010	Paul Alliott Input Into Depot Drawings	1d	20-Sep-06 A	20-Sep-06 A
A11020	Paul Alliott To Confirm SDS On Target For PD PLUS	1d	20-Sep-06 A	21-Sep-06 A
A11030	M Rose To Import Signalling And Comms Drawings	1d	22-Sep-06 A	22-Sep-06 A
A11040	Comms Check And Update	2d	25-Sep-06 A	26-Sep-06 A
A11050	Signalling Check And Update	2d	25-Sep-06 A	26-Sep-06 A
A11060	Final Paul Alliott Review Update and Sign Off	3d	27-Sep-06 A	29-Sep-06 A
A11070	Client Sign Off	0d		29-Sep-06 A
A11090	SCC Internal PD PLUS Meeting	1d	07-Sep-06 A	08-Sep-06 A
A11100	PD Plus Management	40d	01-Aug-06 A	29-Sep-06 A
SCC General Activities and High Level		373d	03-Jul-06 A	14-Dec-07 A
A11130	Outline Drawings To Be Produced and Quantities	9d	14-Aug-06 A	25-Aug-06 A
A11150	Meetings Schedule; Interfaces and Stakeholders	18d	21-Aug-06 A	15-Sep-06 A
A11160	Review and Allocate HIRA PD Outputs, Risks Including CDM	32d	02-Nov-06 A	19-Dec-06 A
A11170	Collate and Closed Down All Comments Including IDC, Client and Checks of Internal Reviews	100d	03-Jul-06 A	29-Nov-06 A
A11180	Develop SCC Technical Spec & SCC Test Spec Format	8d	20-Nov-06 A	30-Nov-06 A
A11190	Support / Liaise / Exchange of Data Between Disciplines	294d	04-Sep-06 A	30-Nov-07 A
A11200	Produce Draft SCC Technical Specification -First Pass	142d	19-Feb-07 A	24-Sep-07 A
A11210	IDC of SCC Technical Specification and Manage Reviews / Comments	19d	12-Nov-07 A	07-Dec-07 A
A11220	Produce Draft SCC Technical Specification	85d	19-Feb-07 A	30-Jun-07 A
A11230	Identify and Agree New / Changed Requirements and Agree With Engineering Manager	120d	04-May-07 A	02-Nov-07 A
A14210	Produce SCC Test Specification	121d	11-Jun-07 A	07-Dec-07 A
A14220	SCC Peer Review SCC Technical Specification and Drawings	8d	27-Nov-07 A	06-Dec-07 A
A14230	Update SCC Technical Specification, Drawings and BoQ With Comments Received	9d	26-Nov-07 A	07-Dec-07 A
A14240	Update SCC Requirements Specification If Required	107d	11-Jun-07 A	16-Nov-07 A
A14250	Detailed Design OPS Meeting With Client and Review	0d		12-Oct-06 A
A14260	Issue SCC Technical Specification and Drawings to tie	0d		14-Dec-07 A
Signalling - Technical Activities		472d	03-Jul-06 A	12-May-08
A14380	PB Client and Stakeholder Meetings To Develop Required Scope, Level of Detail and Way Forward	33d	16-Oct-06 A	01-Dec-06 A
A14390	TMS & TPDS Developt of Design & Test Documentation	290d	02-Nov-06 A	31-Jan-08
A14400	PIDS Development of Design and Test Documentation	19d	27-Nov-06 A	22-Dec-06 A
A14410	SCADA Development of Design and Test Documentation	12d	01-Mar-07 A	19-Mar-07 A
A14420	Control Room Development of Design and Test Documentation	70d	18-Dec-06 A	11-Apr-07 A
A14430	Integrated Equipment Cubicle Development of Design and Test Documentation	63d	08-Nov-06 A	16-Feb-07 A
A14440	SCC Review of SCC Comms Led Drawings (Including Location Based)	5d	12-Nov-07 A	16-Nov-07 A
A14450	Provide Design Level of Detail To Other Disciplines To Enable Their Designs To Be Completed	230d	23-Oct-06 A	15-Oct-07 A
A14460	Finalise TPDS Loop Drawings	9d	29-Apr-08	12-May-08
A14470	Provide Test Specification Sections of Signalling Led Test	30d	20-Mar-07 A	04-May-07 A
A14480	SCC Risks and Assumptions Associated With For Signalling Led Subsystems	55d	02-Nov-07 A	31-Jan-08
A14490	Identify New / Revised Requirements For Consideration	53d	20-Mar-07 A	11-Jun-07 A
A14500	Produce Initial Sample Drawings	19d	02-Oct-06 A	27-Oct-06 A
A14510	Correlate Drawings Against Other Discipline Output and Finalise All At 100%	243d	23-Oct-06 A	02-Nov-07 A
A14550	Systems Assurance Review Meeting 2	0d		12-Feb-07 A
A14560	Systems Assurance Review Meeting 3	0d		09-Mar-07 A
A14600	Support As Required To Safety Assurance	256d	04-Sep-06 A	04-Oct-07 A
A14610	Signalling Resources	371d	03-Jul-06 A	31-Jan-08
Produce / Revise Sig Led Drawings In Line With A1 and A3 of SCC OPS		298d	02-Oct-06 A	30-Nov-07 A
A14270	PIDS Drawings	23d	23-Oct-06 A	24-Nov-06 A
A14280	Tram Position Detection System Track Layout	276d	02-Oct-06 A	30-Nov-07 A
A14290	SCC Floor Plans Input To Ian Brown	39d	02-Jan-07 A	28-Feb-07 A
A14300	SCC Cable Routes Input to Tony Bishop	173d	02-Jan-07 A	24-Sep-07 A
A14310	Cubicles Input To Ian Brown	58d	27-Nov-06 A	28-Feb-07 A
A14320	Workstation Layout Typicals	198d	12-Jan-07 A	09-Nov-07 A
A14330	TPDS Mimic For Lothian Bus	203d	05-Jan-07 A	09-Nov-07 A
A14340	Mass Trip / Intertrip Drawings	62d	08-Nov-06 A	15-Feb-07 A
A14350	SCADA Drawings	82d	08-Nov-06 A	16-Mar-07 A
A14370	T Power end of task to feed into programme A13940	0d		15-Jan-07 A
Comms - Technical Activities		400d	03-Jul-06 A	31-Jan-08
A14690	PB Client and Stakeholder Meetings To Develop Required Scope Level of Detail and Way Forward	33d	16-Oct-06 A	01-Dec-06 A
A14700	Support as Required To Safety Assurance	256d	04-Sep-06 A	04-Oct-07 A
A14710	Telephone Network Development of Design and Test Documentation	14d	04-Dec-06 A	22-Dec-06 A
A14720	Public Address Development of Design and Test Documentation	45d	15-Jan-07 A	21-Mar-07 A
A14730	Operational Radio System Propagation Modelling	38d	23-Oct-06 A	15-Dec-06 A
A14740	Operational Radio System Development of Design and Test Documentation	39d	23-Jan-07 A	21-Mar-07 A
A14750	Passenger Help / Passenger Emergency Help Point Development of Design and Test Documentation	35d	02-Jan-07 A	21-Feb-07 A
A14760	CCTV Development of Design and Test Documentation	42d	30-Jan-07 A	02-Apr-07 A
A14770	ODN Development of Design and Test Documentation	20d	15-Mar-07 A	16-Apr-07 A
A14780	Depot Equipment Room Development of Design and Test Documentation	77d	18-Dec-06 A	20-Apr-07 A
A14790	SCC Review of TPDS Track Layout Drawings	14d	19-Nov-07 A	07-Dec-07 A
A14800	Provide Design Level of Detail To Other Disciplines To Enable Their Designs To Be Completed	218d	08-Nov-06 A	15-Oct-07 A

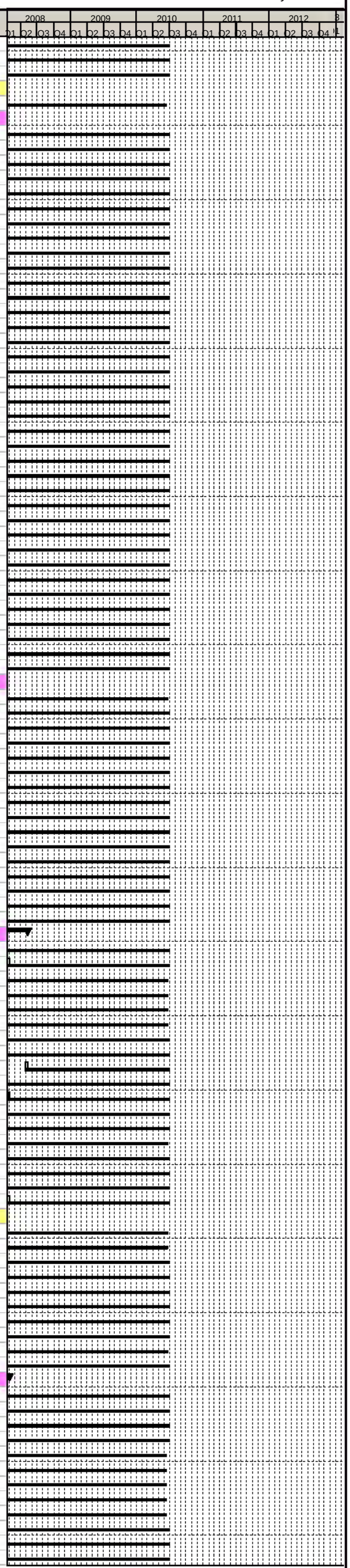

Primary Baseline
Actual Work
Remaining Work
Critical Remaining Work
Baseline Milestone
Milestone

Trams for Edinburgh ..connecting our Capital

Edinburgh Tram Project

SDS FULL DESIGN PROGRAMME @ V26

tie

Activity ID	Activity Name	Original Duration	Start	Finish
A14820	Provide Test Specification Sections of Comms Led Text	191d	06-Apr-07 A	31-Jan-08
A14830	SCC Risks and Assumptions Associated Comms Led Activities	119d	17-Apr-07 A	15-Oct-07 A
A14840	Identify New / Revised Requirements For Consideration	31d	17-Apr-07 A	04-Jun-07 A
A14850	Produce Initial Sample Drawings	28d	09-Oct-06 A	17-Nov-06 A
A14860	SCC Operational Radio System Basestation Site	39d	23-Jan-07 A	21-Mar-07 A
A14870	Correlate Drawings Against Other Discipline Outputs and Finalise	205d	17-Nov-06 A	04-Oct-07 A
A14910	Operational Radio System Propagation Modelling Report For Issue To tie	0d		15-Dec-06 A
A14920	tie Approval Period Propagation Report	20d	18-Dec-06 A	23-Jan-07 A
A14940	Initial Consultation With Radio Site Owners	0d	02-Jan-07 A	02-Jan-07 A
A14950	Comms Resources	371d	03-Jul-06 A	31-Jan-08
Produce / Revise Comms Led Drawings In Line With A1 and A2 of SCC OPS		99d	20-Nov-06 A	16-Apr-07 A
A14620	SCC Location Based Drawings	70d	08-Dec-06 A	30-Mar-07 A
A14630	SCC Tram CCTV To External Parties	60d	02-Jan-07 A	30-Mar-07 A
A14640	SCC Operational Radio System (Exc Basestation Site Detail)	52d	15-Jan-07 A	30-Mar-07 A
A14650	SCC Telephone Network	9d	20-Nov-06 A	01-Dec-06 A
A14660	SCC Operational Data Network	92d	20-Nov-06 A	16-Apr-07 A
A14670	Input From tie	0d		29-Nov-06 A
A14680	Instigate Radio Site Discussion	32d	04-Dec-06 A	29-Jan-07 A
Supervisory Control & Comms (SCC) (Task200.5.2)		205d	19-Sep-05 A	30-Jun-06 A
A0041000	Telecommunications	95d	19-Sep-05 A	03-Feb-06 A
A0092010	Wireless Communications	20d	30-Nov-05 A	03-Jan-06 A
SDS22250	Develop Systems & Communications Specifications	85d	20-Feb-06 A	30-Jun-06 A
SDS22280	Issue Systems & Communications Specifications	0d		30-Jun-06 A
VO155 IT Performance Review (Internal - Rejected)		115d	03-Nov-06 A	23-Apr-07 A
A11320	IT Performance Review	107d	03-Nov-06 A	23-Apr-07 A
VO156 CAD Issues and Underestimation (Internal - Rejected)		122d	03-Nov-06 A	02-May-07 A
A11340	CAD Issues and Underestimation	113d	03-Nov-06 A	02-May-07 A
Stakeholder Reviews		538d	20-Feb-06 A	01-Apr-08
A569560	Prepare Plans as Defined in Bill	37d	20-Feb-06 A	13-Apr-06 A
A569590	Special Interest Groups Consultation	57d	21-Feb-06 A	19-May-06 A
A569600	SLGs Consultation Surveys	23d	06-Mar-06 A	07-Apr-06 A
A569610	Feed in Stakeholder Comments	27d	06-Mar-06 A	13-Apr-06 A
A569620	Review Potential Issues with tie	4d	22-May-06 A	25-May-06 A
A569630	SLGs Consultation Meetings	25d	28-Apr-06 A	07-Jun-06 A
A569870	Design Correspondence	368d	03-Jul-06 A	25-Jan-08
A569880	Coordination of Technical support to tie Communication Team	368d	03-Jul-06 A	25-Jan-08
A569890	Analysis of Stakeholder Information	345d	03-Jul-06 A	14-Dec-07 A
A569900	Project Reporting	351d	03-Jul-06 A	24-Dec-07 A
A569910	Communications Support to Design Process	391d	03-Jul-06 A	29-Feb-08
A569920	Communications Support for Surveys	176d	03-Jul-06 A	30-Mar-07 A
A569940	Close Out Review	19d	03-Mar-08	01-Apr-08
A569950	Individual Landowners Consultation	233d	03-Jul-06 A	29-Jun-07 A
A569960	Opinion Formers Approvals Consultation	205d	14-Aug-06 A	29-Jun-07 A
TRO's (Task200.4)		915d	01-May-06 A	30-Nov-09
Order Preparation & Process		456d	24-Aug-07 A	11-Jun-09
SDS34220	Issue Consultation Package to Consultees	0d		21-Sep-08
SDS34230	Preparation of Consultation Report	2d	18-Nov-08	19-Nov-08
SDS34260	Submit Package to CEC for report to comittee	0d		19-Nov-08
SDS55810	Preparation of Consultation Report to Comittee to obtain authorisation for Public Deposit	2d	18-Nov-08	19-Nov-08
SDS55820	Public Deposit of Documents and Open Public Exhibition	19d	08-Jan-09	04-Feb-09
SDS55830	Submit Package to CEC for Report to Committee	0d		04-Mar-09
SDS55860	Dundas and Wilson Compile Draft TRO Articles (REVISION OF PROCESS)	72d	24-Aug-07 A	10-Dec-07 A
SDS67050	Preperation of draft relevant Maps showing proposed traffic regulation measures	9d	23-Jul-08	05-Aug-08
SDS70650	Analyse Objection & Prepare Objections Report	19d	05-Feb-09	04-Mar-09
SDS70670	Council decision to Make Orders or proceed to Public Hearing	19d	06-Mar-09	02-Apr-09
SDS70680	Orders made by CEC and Public Notice of Making Orders	9d	16-Apr-09	29-Apr-09
SDS70690	Preparation of Notices for Making of Orders	5d	03-Apr-09	09-Apr-09
SDS70700	TRO Legal Challenge Period	28d	30-Apr-09	10-Jun-09
SDS70710	TRO Legal & Able to be Enacted	0d		11-Jun-09
SDS70720	Commence Implementation	0d		11-Jun-09*
SDS70800	Issue Draft Relevant Maps to CEC For Comments	0d		05-Aug-08
SDS70820	Preparation of letters with copy Relevant Map to issue to Statutory Consultees	1d	19-Sep-08	20-Sep-08
SDS74260	Dundas and Wilson Complete Appropriate Deposit Documents (REVISION OF PROCESS)	72d	24-Aug-07 A	10-Dec-07 A
SDS74270	Briefing session with Member based on Relevant Map and receive approval to conduct Statutory Consultation	9d	03-Sep-08	16-Sep-08
SDS74280	Collate Documents for Public Deposit	5d	18-Dec-08	24-Dec-08
SDS82170	Issue Draft Relevant Maps to tie For Comments	0d		05-Aug-08
SDS82180	Receive tie and CEC comments on proposed traffic regulation meansures	9d	06-Aug-08	19-Aug-08
SDS82200	Informal briefing session with Consultees based on relevant maps	5d	06-Aug-08	12-Aug-08
SDS82210	Preparation of final draft of Relevant Map showing proposed traffic regulation measures	5d	20-Aug-08	26-Aug-08
SDS82220	Issue Final Draft Relevant Maps to CEC For Approval	0d		26-Aug-08
SDS82230	Issue Final Draft Relevant Maps to tie For Approval	0d		26-Aug-08
SDS82240	Receive tie and CEC Approval of final draft of Relevant Map	5d	27-Aug-08	02-Sep-08
SDS82250	Briefing Session for listed Consultees on Final Draft Orders	5d	20-Nov-08	26-Nov-08
SDS82270	Briefing Session for Members on Final Draft Orders	5d	20-Nov-08	26-Nov-08
SDS82280	Meeting with Police, emergency services, bus operators and road haulage to discuss proposed measures	19d	22-Sep-08	17-Oct-08
SDS82290	Preparation of Draft Schedules	19d	06-Aug-08	02-Sep-08
SDS82300	Preparation of Draft Articles	19d	06-Aug-08	02-Sep-08
SDS82310	Receive Consultation Responses	20d	22-Sep-08	20-Oct-08
SDS82320	Analyse Responses and Review and Finalise TRO in view of Statutory Consulation Process	14d	21-Oct-08	10-Nov-08
SDS82330	Meeting with Roads Authority to appraise issues raised by Consultees	5d	30-Oct-08	05-Nov-08
SDS82350	Finalise Schedules	5d	11-Nov-08	17-Nov-08
SDS82360	Finalise Articles	5d	11-Nov-08	17-Nov-08
SDS82370	Finalise Statement of Case and Statement of Reasons	28d	04-Sep-08	15-Oct-08
SDS82380	Draft Statutory Notice for Public Advertisment	1d	16-Oct-08	16-Oct-08
SDS82390	Council decision to proceed to Public Deposit	19d	20-Nov-08	17-Dec-08
SDS82400	Arragement for Public Exhibition and Deposit of Draft Orders	5d	25-Dec-08	31-Dec-08
SDS82410	Advertisments to Newspapers	5d	01-Jan-09	07-Jan-09
SDS82420	Period for objections to be logged	19d	08-Jan-09	04-Feb-09
SDS82430	Briefing Session for Members on Objections	5d	26-Feb-09	04-Mar-09
Public Hearing		557d	24-Sep-07 A	30-Nov-09
SDS34650	TRO Public Hearing For Order 5 (Statutory Processs)	28d	21-Jan-09	03-Mar-09
SDS34670	TRO Legal Challenge Period (Statutory Processs)	28d	20-Oct-09	30-Nov-09
SDS34730	TRO Orders Made By CEC (Statutory Processs)	0d		19-Oct-09
SDS34820	Prepare & Publish Making Notice	10d	25-Sep-09*	09-Oct-09
SDS34870	First Permanent Measures Able To Take Place	0d		30-Nov-09
SDS55790	Reporters Report (Statutory Processs)	45d	04-Mar-09	08-May-09
SDS55800	Review, Recommend & Conclude from Reporters Report (Statutory Processs)	85d	11-May-09	14-Sep-09
SDS55850	Preparation For Public Hearing	53d	24-Sep-07 A	10-Dec-07 A
SDS55900	Issue Report to CEC On Reporters Findings for Order 5 Hearing	0d		14-Sep-09
SDS56140	Report to CEC for Approval to Make TRO for Order 5	21d	15-Sep-09	14-Oct-09
SDS70840	TRO Orders Made By CEC (Statutory Processs)	0d		30-Nov-09
SDS82840	Preparation For Public Hearing	19d	18-Dec-08	14-Jan-09
Application to Scottish Executive		212d	01-May-07 A	29-Feb-08

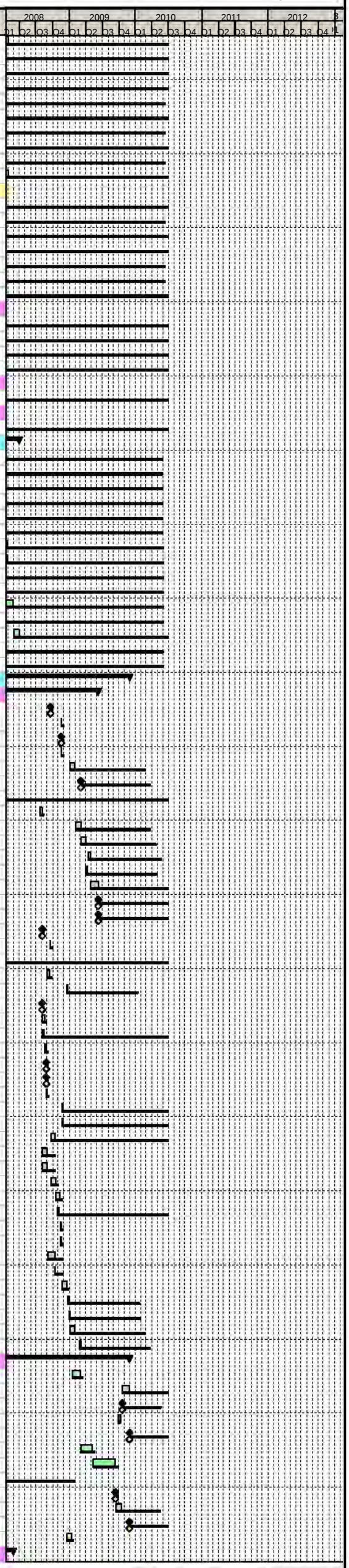

Primary Baseline
Actual Work
Remaining Work
Critical Remaining Work
Baseline Milestone
Milestone

Trams for Edinburgh
...connecting our Capital

Edinburgh Tram Project

SDS FULL DESIGN PROGRAMME @ V26

tie

Activity ID	Activity Name	Original Duration	Start	Finish
SDS70730	Formal Application to Scottish Executive For Change to the Regulations	41d	01-May-07 A	29-Jun-07 A
SDS70740	Confirmation of Regulations Being Changed From SE	0d		29-Feb-08*
Design Process		570d	01-May-06 A	24-Jul-08
SDS70850	Collate Exisiting TRO	62d	01-May-06 A	31-Jul-06 A
SDS70860	Receive PD2 Roads Design	0d	10-Aug-07 A	
LOD		242d	13-Aug-07 A	24-Jul-08
SDS70760	Full Draft TRO proposal available	0d		22-Feb-08
SDS70870	Complete Draft TRO Proposals Based On PD2 (REVISION OF PROCESS)	81d	13-Aug-07 A	10-Dec-07 A
SDS82130	TRO Drafted to reflect Roads Design as Submitted to tie and CEC subsection by subsection	14d	04-Feb-08	22-Feb-08
SDS82140	Interim Informal meetings with Emergency services and other Statutory Consultees	19d	25-Feb-08	21-Mar-08
SDS82160	TRO team receive Final Road Design approved by RTA	0d		24-Jul-08
Wider Area TRO Design		228d	02-Jul-07 A	23-May-08
SDS74240L	L: Test wider area junction solutions in TRANSYT to optimise traffic flows	69d	08-Oct-07 A	25-Jan-08
SDS74380Z	Z: Prepare any existing data ready for review for junctions and links likley to be affected	95d	02-Jul-07 A	19-Nov-07 A
SDS74390AA	AA: On site surveys	9d	11-Feb-08	22-Feb-08
SDS74400AB	AB: Draw up draft TRO	5d	25-Feb-08	29-Feb-08
SDS74450AP	AP: Detailed Design of Wider Area TRO	14d	03-Mar-08	21-Mar-08
SDS74460	Issue Preliminary TRO to CEC for Initial Approval	53d	29-Feb-08	16-May-08
SDS74470	Issue Detailed TRO to CEC for Approval	0d		21-Mar-08
SDS74480	Initial Approval of TRO granted by CEC	51d	11-Mar-08	23-May-08
SDS74490	Final Approval of TRO granted by CEC	38d	24-Mar-08	16-May-08
SDS81830	Z: Junctions and links requiring changes prepare exisitng data redy for review	14d	28-Jan-08	15-Feb-08
TTROs		178d	04-Dec-06 A	17-Aug-07 A
SDS23680	Handover Traffic Management Requirements to MUDFA (In Accordance With Contract)	0d		08-May-07 A
SDS56990	Handover Traffic Management Requirements to INFRACO (In Accordance With Contract)	0d		17-Aug-07 A
TTRO230	Receive & Update to tie Comments	9d	12-Feb-07 A	23-Feb-07 A
TTRO380	MUDFA TTRO Legal Process	8d	26-Mar-07 A	06-Apr-07 A
TTRO410	INFRACO TTRO Legal Process	38d	25-Jun-07 A	17-Aug-07 A
TTRO520	tie Approval Period	19d	12-Dec-06 A	16-Jan-07 A
TTRO530	SDS & Dundas & Wilson Draft MUDFA TTRO Order & Schedules	5d	04-Dec-06 A	08-Dec-06 A
TTRO540	Re-Issue MUDFA TTRO Order & Schedules To tie	0d		12-Mar-07 A
TTRO570	Issue MUDFA TTRO Order & Schedules To tie	0d		11-Dec-06 A
TTRO580	SDS & Dundas & Wilson Draft INFRACO TTRO Order & Schedules	14d	04-Jun-07 A	22-Jun-07 A
TTRO610	Issue INFRACO TTRO Order & Schedules To tie	0d		22-Jun-07 A
Traction Power (Task 200.6.1)		829d	19-Sep-05 A	10-Dec-08
A0050000	Traction Power	90d	19-Sep-05 A	27-Jan-06 A
A0050010	11KV Feeders	90d	19-Sep-05 A	27-Jan-06 A
VO61 Additional Traction Power Hours (Internal)		96d	14-Nov-06 A	06-Apr-07 A
SDS73160	VO61 Additional Traction Power Hours	91d	14-Nov-06 A	06-Apr-07 A
VO172 Traction Power Management (Internal)		170d	12-Mar-07 A	02-Nov-07 A
SDS70620	VO172 Additional Traction Power Design Management	155d	12-Mar-07 A	02-Nov-07 A
SDS73690	Revise Engineering Plan and OPS (subject to VO135 and VO230)	8d	29-Jun-07 A	11-Jul-07 A
SDS73700	Internal Issue - Revised EP and OPS	0d		17-Jul-07 A
SDS73710	Generate System Interface Specifications (Traction Power)	5d	18-Jul-07 A	24-Jul-07 A
SDS73720	Internal Issue - System Interface Specifications	0d		25-Jul-07 A
VO273 Extention to Traction Power Management (Internal)		107d	02-Nov-07 A	09-Apr-08
SDS80980	VO273 Extention to Traction Power Design Management	99d	02-Nov-07 A	09-Apr-08
Substation (Task 200.2)		124d	06-Feb-06 A	27-Jul-06 A
A1210	Interface Design With DNO Scottish Power	93d	06-Feb-06 A	29-Jun-06 A
A1220	Prelim substation layouts and sites	51d	13-Mar-06 A	31-May-06 A
A1240	Planning input - Substation buildings	9d	19-Jun-06 A	30-Jun-06 A
A1470	Issue Draft Substation Layout Report	0d		30-Jun-06 A
A4720	Identify Substation Sites	91d	06-Feb-06 A	27-Jun-06 A
SDS32810	tie Approval Period	19d	19-Jun-06 A	14-Jul-06 A
SDS32820	Receive tie Comments	0d		14-Jul-06 A
SDS32830	Update to tie Comments	9d	14-Jul-06 A	27-Jul-06 A
Traction Power Systems - General TPS - System Wide		444d	25-Jul-06 A	25-Apr-08
A1175	Evaluate Traction Power Equipment and Finalise, Substation Equipment Specification - Update 2 (TPS 18)	14d	04-Dec-06 A	22-Dec-06 A
A13820	Undertake Calculation Of DC Protection Settings For Complete TPS System (TPS 21)	42d	08-Dec-06 A	16-Feb-07 A
A13840	Issue Generic TSS Protection Schematic (TPS 20)	0d		18-Dec-06 A
A13850	Issue DC Protection Settings For Complete TPS System (TPS 21)	0d		16-Feb-07 A
A13860	Develop Traction Power Cable and Routing Schedule (Owner T Bishop) (TPS 12DD)	77d	11-Sep-06 A	10-Jan-07 A
A13870	Issue Traction Power Cable and Routing Schedule (TPS 12DD) (Owner T Bishop)	0d		10-Jan-07 A
A13880	Detail Design Electrical Safety - Prepare Update to Electrical Nonenclature Report - Update 1 (TPS 25)	29d	18-Aug-06 A	02-Oct-06 A
A13920	Detail Design Input Into Electrical Specifications For Track	5d	12-Jan-07 A	18-Jan-07 A
A13930	Prepare Generic SCADA I / O Schedules (TP 28)	1d	12-Jan-07 A	15-Jan-07 A
A13940	Issue Generic SCADA I / O Schedules (TPS 28)	0d		16-Jan-07 A
A14160	Detail Design Electrical Safety - Prepare Update to Electrical Nonenclature Report - Update 2 (TPS 25)	7d	08-Jan-07 A	16-Jan-07 A
A14170	Issue Electrical Nonenclature Report - Iteration 2 (TPS 25)	0d		16-Jan-07 A
A1720	Evaluate Results of Traction Power Simulation Modelling and Modify Interim TPS System Proposals	10d	07-Aug-06 A	21-Aug-06 A
A1790	Prepare Interim TPS Scheme Development Report (TPS3DDB)	53d	29-Aug-06 A	15-Nov-06 A
A1800	Establish / Confirm System Design Criteria To Be Applied	2d	20-Nov-06 A	21-Nov-06 A
A1810	Obtain and Review Data Relating To TPS System Detailed Design	2d	17-Nov-06 A	20-Nov-06 A
A1820	Undertake TPS System Load Flow / Voltage Regulation Analysis	0d	12-Mar-08	12-Mar-08
A1830	Evaluate Results Of Simulation Modelling and Adjust TPS System Design	11d	12-Mar-08	28-Mar-08
A1840	Refine TPS System Load Flow / Voltage Regulation Analysis	1d	28-Mar-08	31-Mar-08
A1850	Validate Equipment Ratings and Cable and Overhead Conductor Sizes	8d	31-Mar-08	10-Apr-08
A1860	Intitial Preparation TPS System Design Report (TPS3DDI)	3d	07-Feb-07 A	09-Feb-07 A
A1870	Issue Interim TPS Scheme Development Report (TPS 3DDB)	0d		20-Nov-06 A
A1880	Issue Internally TPS System Design Report (TPS 3DDI)	0d		25-Apr-08
A1890	Determine DNO Derived Power Supply Availability and Sizing.	128d	25-Jul-06 A	08-Feb-07 A
A3310	Evaluate and Finalise Substation Locations - DNO Power Supplies Output (TPS 16)	6d	12-Feb-07 A	19-Feb-07 A
A3320	Issue Substation Sites and DNO Requirements Summary Report (TPS 16)	0d		19-Feb-07 A
A3330	Develop Detail Of & Finalise TPS AC/DC Feeding & Sectioning Diagram - Update 1 (TPS 17)	23d	21-Sep-06 A	25-Oct-06 A
A3340	Develop Detail Of and Finalise TPS AC / DC Feeding and Sectioning Diagram - Update 2 (TPS 17)	6d	06-Nov-06 A	13-Nov-06 A
A3350	Issue TPS AC / DC Feeding and Sectioning Diagram (TPS 17)	0d		13-Nov-06 A
A3360	Evaluate Traction Power Equipment and Finalise, Substation Equipt Spec - Update 1 (TPS 18)	20d	19-Oct-06 A	16-Nov-06 A
A3370	Issue Traction Power Equipment and Substation Equipment Specification - Update 2 (TPS18) to tie	0d		21-Dec-06 A
A3440	Develop Detail Of and Finalise Earthing and Bonding Policy (TPS 8DD)	6d	04-Dec-06 A	11-Dec-06 A
A3450	Issue Updated Earthing and Bonding Policy (TPS 8DD)	0d		18-Dec-06 A
A4280	Prepare Final TPS System Design Report (TPS3DDI)	10d	10-Apr-08	25-Apr-08
SDS67310	Issue DC Feeding and Sectioning Diagrams (Iteration 1)	0d		25-Oct-06 A
SDS67320	Issue of Substation Equipment Specification Update 1 (TPS 18)	0d		16-Nov-06 A
VO192 Traction Power Systems Extension to Design Programme (Internal)		26d	12-Mar-08	17-Apr-08
VO21500	Power Quality - Review Traction Loads for Power Quality Changes	3d	12-Mar-08	17-Mar-08
VO22300	Power Quality - Prepare Power Quality Report Update	7d	17-Mar-08	26-Mar-08
VO42900	Protection Settings - Review AC/DC Traction Loads for Protection Settings	4d	26-Mar-08	01-Apr-08
VO43000	Protection Settings - Prepare Protection Settings Report Update	5d	01-Apr-08	08-Apr-08
VO43100	DC Feeding & Sectioning Diagrams - Prepare Update	1d	14-Apr-08	15-Apr-08
VO43700	Cable Schedules - Review Pan Volts, Rail Potentials and Loads for Cable Quantities	1d	16-Apr-08	16-Apr-08
VO45000	Cable Schedules - Prepare Update	1d	17-Apr-08	17-Apr-08
VO45800	Traction Power Equipment - Review Traction Power Equipment Ratings in line with revised load flow	0d	10-Apr-08	10-Apr-08
VO46400	Traction Power Equipment - Prepare Update to Traction Power Equipment Specification	3d	11-Apr-08	16-Apr-08

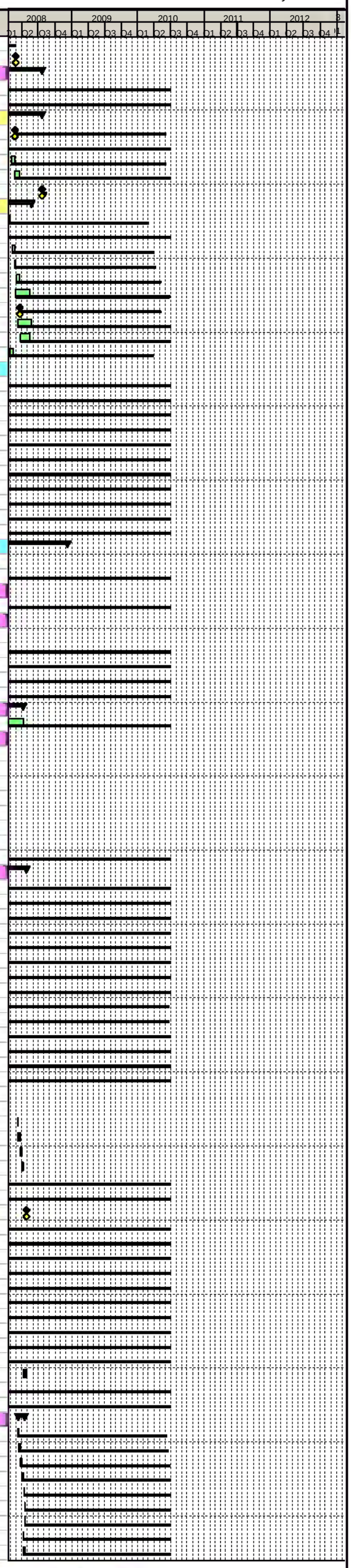

Primary Baseline
Actual Work
Remaining Work
Critical Remaining Work
Baseline Milestone
Milestone

Trams for Edinburgh ..connecting our Capital

Edinburgh Tram Project

SDS FULL DESIGN PROGRAMME @ V26

tie

Activity ID	Activity Name	Original Duration	Start	Finish
VO46700	Single Line Diagrams - Review for Revisions Subject to Traction Power Equipment Ratings	0d	10-Apr-08	10-Apr-08
VO47100	Single Line Diagrams - Prepare Update to SLDs	4d	11-Apr-08	17-Apr-08
Traction Substation Electrical Design		123d	14-Aug-06 A	09-Feb-07 A
A13790	Specific Single Line Diagrams - Granton Road Substation	5d	05-Feb-07 A	09-Feb-07 A
A13800	Issue Site Specific Substation Single Line Diagrams	0d		09-Feb-07 A
A13810	Develop TSS Short Circuit, Overload Protect Methods & Generic Protection Schematic (TPS20)	7d	08-Dec-06 A	18-Dec-06 A
A13900	Prepare Detailed Substation & Trackside Interface Demarcation Diagram (TPS 26)	63d	14-Aug-06 A	15-Nov-06 A
A13910	Issue Substation and Trackside Interface Demarcation Diagram (TPS 26)	0d		15-Nov-06 A
A13970	Specific Single Line Diagrams - Gogar Depot	5d	05-Feb-07 A	09-Feb-07 A
A3290	Prepare Schematic Diagram for DNO Derived LVAC Power Supplies (TPS 31)	15d	08-Jan-07 A	30-Jan-07 A
A3300	Issue Schematic Diagram for DNO Derived LVAC Power Supplies (TPS 31)	0d		30-Jan-07 A
A3460	Specific Single Line Diagrams - Generic Substation	13d	06-Nov-06 A	23-Nov-06 A
A3470	Specific Single Line Diagrams - Ingliston P&R Substation	4d	23-Nov-06 A	28-Nov-06 A
A3480	Specific Single Line Diagrams - Bankhead Drive Substation	11d	20-Nov-06 A	05-Dec-06 A
A3490	Specific Single Line Diagrams - Jenners Substation	4d	06-Dec-06 A	11-Dec-06 A
A3500	Specific Single Line Diagrams - Russell Road Paralleling Hut	5d	18-Dec-06 A	22-Dec-06 A
A4450	Specific Single Line Diagrams - Haymarket Substation	5d	02-Jan-07 A	08-Jan-07 A
A4460	Specific Single Line Diagrams - Cathedral Substation	4d	08-Jan-07 A	11-Jan-07 A
A4470	Specific Single Line Diagrams - Leith Walk Substation	4d	11-Jan-07 A	16-Jan-07 A
A5530	Specific Single Line Diagrams - North Leith Sands Substation	6d	12-Jan-07 A	19-Jan-07 A
A5540	Specific Single Line Diagrams - Craigleith Substation	5d	22-Jan-07 A	26-Jan-07 A
A5710	Specific Single Line Diagrams - Granton Mains Substation	5d	29-Jan-07 A	02-Feb-07 A
Depot OLE / Plant Interlocking		33d	12-Jan-07 A	27-Feb-07 A
A13950	Energisation Warning and Interlocking Scheme (TPS 29)	31d	12-Jan-07 A	27-Feb-07 A
A13960	Issue Energisation Warning and Interlocking Scheme (TPS 29)	0d		27-Feb-07 A
Stray Current Management		34d	04-Oct-06 A	20-Nov-06 A
A1185	Finalise Stray Current Management Strategy (TPS 34)	10d	04-Oct-06 A	18-Oct-06 A
A1555	Issue Updated Stray Current Management Strategy (TPS 34)	0d		17-Nov-06 A
A3420	Finalise Stray Current Code of Practice (TPS 7DD)	14d	31-Oct-06 A	20-Nov-06 A
A3430	Issue Stray Current Code of Practice (TPS 7DD)	0d		20-Nov-06 A
Design		113d	03-Feb-06 A	11-Jul-06 A
A1040	Traction Power Model / Calculations	98d	03-Feb-06 A	04-Jul-06 A
A1050	Cabling / OLE sizing	77d	10-Mar-06 A	07-Jul-06 A
A1060	OLE Feeder isolator principles	66d	10-Mar-06 A	21-Jun-06 A
A1070	Feeding and Sectioning Diagram	89d	03-Feb-06 A	21-Jun-06 A
A1080	Main cabling, Routing and Schedules	51d	21-Apr-06 A	07-Jul-06 A
A1090	Depot switching and Interlocking with E&M Plant (Input)	5d	05-Jul-06 A	11-Jul-06 A
A1100	SCADA Facilities and Schedules (input into Comms)	73d	03-Feb-06 A	26-May-06 A
A1110	Trackside LV Power Supplies	9d	26-Jun-06 A	07-Jul-06 A
A1380	Issue Traction Power Specification	0d		07-Jul-06 A
A1460	Prepare Traction Power Specification	18d	13-Jun-06 A	07-Jul-06 A
Specification		79d	10-Feb-06 A	31-May-06 A
A1120	Substation Equipment Specification	42d	10-Feb-06 A	13-Apr-06 A
A1130	Issue Draft Substation Equipment Specification	0d		13-Apr-06 A
A1140	Draft System Earthing & Bonding Policy	32d	27-Feb-06 A	13-Apr-06 A
A1150	Issue Draft System Earthing & Bonding Policy	0d		13-Apr-06 A
A1160	Input into SCADA Specification	70d	10-Feb-06 A	31-May-06 A
Stray Current		704d	13-Mar-06 A	10-Dec-08
A1260	Draft Stray Current Management Position Report	22d	13-Mar-06 A	13-Apr-06 A
A1270	Issue Stray Current Management Position Report	0d		30-Jun-06 A
A1280	Stray Current Working Party - Set up with Utilities	27d	22-May-06 A	30-Jun-06 A
A1290	Draft Stray Current Code of Practice	39d	16-May-06 A	13-Jul-06 A
A1300	Issue Draft Stray Current Code of Practice Position Report	0d		13-Jul-06 A
SDS56890	tie Approval Period	19d	13-Jul-06 A	09-Aug-06 A
SDS56900	Receive tie Comments	0d		10-Aug-06 A
VO135 Detailed Design of Stray Current (Internal)		14d	06-Aug-07 A	23-Aug-07 A
SDS73730	Stray Current Code of Practice Report	1d	06-Aug-07 A	06-Aug-07 A
SDS73740	Stray Current Corrosion Control Agreement	1d	07-Aug-07 A	07-Aug-07 A
SDS73750	Stray Current Risk Management Strategy	3d	08-Aug-07 A	10-Aug-07 A
SDS73760	Stray Current Testing & Commissioning Plan	4d	13-Aug-07 A	16-Aug-07 A
SDS73770	Issue SC COP, SC, CCA, SC RMS and SC TCP	0d		23-Aug-07 A
VO230 SDS Support to Stray Current Working Party		391d	04-Jun-07 A	10-Dec-08
SDS73820	Support to Stray Current Working Party No 1	3d	04-Jun-07 A	06-Jun-07 A
SDS73830	Stray Current Working Party No 1	0d	05-Jun-07 A	
SDS73840	Support to Stray Current Working Party No 2	16d	20-Aug-07 A	12-Sep-07 A
SDS73850	Stray Current Working Party No 2	0d	11-Sep-07 A	
SDS73860	Support to Stray Current Working Party No 3	4d	15-Oct-07 A	18-Oct-07 A
SDS73870	Stray Current Working Party No 3	0d	17-Oct-07 A	
SDS73880	Support to Stray Current Working Party No 4	32d	10-Nov-07 A	04-Jan-08 A
SDS73890	Stray Current Working Party No 4	0d	01-Feb-08*	
SDS73900	Support to Stray Current Working Party No 5	3d	03-Mar-08	05-Mar-08
SDS73910	Stray Current Working Party No 5	0d	04-Mar-08*	
SDS73920	Support to Stray Current Working Party No 6	3d	31-Mar-08	02-Apr-08
SDS73930	Stray Current Working Party No 6	0d	01-Apr-08*	
SDS73940	Support to Stray Current Working Party No 7	3d	02-Jun-08	04-Jun-08
SDS73950	Stray Current Working Party No 7	0d	03-Jun-08*	
SDS73960	Support to Stray Current Working Party No 8	3d	04-Aug-08	06-Aug-08
SDS73970	Stray Current Working Party No 8	0d	05-Aug-08*	
SDS73980	Support to Stray Current Working Party No 9	3d	06-Oct-08	08-Oct-08
SDS73990	Stray Current Working Party No 9	0d	07-Oct-08*	
SDS74000	Support to Stray Current Working Party No 10	3d	01-Dec-08*	03-Dec-08
SDS74010	Stray Current Working Party No 10	0d	02-Dec-08*	
SDS74020	Prepare, Check and Approve Stray Current Test Site Drawings	5d	06-Mar-08	12-Mar-08
SDS74030	Issue Stray Current Test Site Drawings for External Approval	0d		12-Mar-08
SDS74040	Prepare, Check and Approve Stray Current Working Party Position Report	6d	03-Dec-08	10-Dec-08
SDS74050	Issue Stray Current Working Party Position Report for External Approval	0d		10-Dec-08
Traction Power Systems		439d	15-Aug-06 A	09-May-08
A1005	Review and Update Outline Project Specification (OPS) 'Traction Power Distribution' (TPS 14)	19d	07-Sep-06 A	04-Oct-06 A
A1180	Review and Update Detailed Design Phase Programme	34d	15-Aug-06 A	04-Oct-06 A
A1190	Prepare Risk Register Update Associated with TPS (TPS 15)	24d	11-Oct-06 A	15-Nov-06 A
A14050	Final IDC - Systemwide Traction Power Design	9d	25-Apr-08	09-May-08
A14060	Prepare CDM Designers Risk Assessment Sheets	16d	12-Feb-07 A	06-Mar-07 A
A14070	Internal Issue of CDM Designers Risk Assessment Sheets (TPS 33)	0d		06-Mar-07 A
A1520	Issue Outline Project Specification (OPS) 'Traction Power Distribution' (TPS14)	0d		04-Oct-06 A
A15240	Interim IDC - System Wide Traction Power Design (Design Drawings)	9d	26-Feb-07 A	11-Mar-07 A
A15250	Interim IDC - System Wide Traction Power Design (Design Reports)	12d	09-Mar-07 A	27-Mar-07 A
A15260	Interim Issue Of Systemwide Traction Power Detailed Design	0d		29-Mar-07 A
A1530	Issue Risk Register Update Associated With TPS (TPS 15)	0d		15-Nov-06 A
SDS67220	Final Issue of Systemwide Traction Power Design To tie	0d		09-May-08*
SDS67530	DTL Project Engineering Activities	106d	29-Aug-06 A	09-Feb-07 A
SDS67540	Design Review	111d	29-Aug-06 A	16-Feb-07 A
Electrical Operation		15d	12-Jun-06 A	30-Jun-06 A
A1310	Draft Electrical Operating Procedures	14d	12-Jun-06 A	30-Jun-06 A

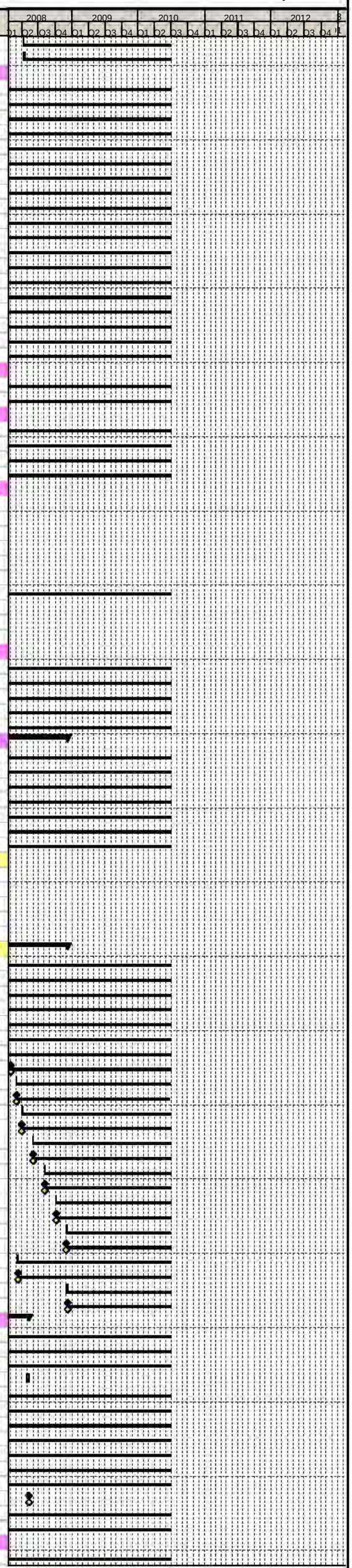

Primary Baseline
Actual Work
Remaining Work
Critical Remaining Work
Baseline Milestone
Milestone

Trams for Edinburgh
connecting our Capital

Edinburgh Tram Project

SDS FULL DESIGN PROGRAMME @ V26

tie

Activity ID	Activity Name	Original Duration	Start	Finish
A1330	Draft Electrical Safety Rules	14d	12-Jun-06 A	30-Jun-06 A
A1390	Issue Electrical Operation Docs for Inclusion into First Draft of Operator's Suite of Electrical Operations Documents	0d		30-Jun-06 A
Electro Magnetic Compatibility		471d	06-Mar-06 A	14-Jan-08
A1350	EMC Management Plan - Preliminary Design	57d	03-Apr-06 A	30-Jun-06 A
A1500	Review Contract Requirements	67d	06-Mar-06 A	16-Jun-06 A
A1510	Earthing Plan	9d	19-Jun-06 A	30-Jun-06 A
A1540	Suppliers EMC Requirements Document	71d	06-Mar-06 A	23-Jun-06 A
A1550	Cable Separation Specification	44d	24-May-06 A	28-Jul-06 A
A1580	Radiated Emissions Requirements	53d	03-Apr-06 A	23-Jun-06 A
A1600	Network Rail Asset ID	56d	03-Apr-06 A	29-Jun-06 A
A1630	DC Stray Current - Zone of Influence Report	56d	03-Apr-06 A	29-Jun-06 A
A1640	Initial Meeting with BAA	5d	16-May-06 A	22-May-06 A
A1670	Issue Cable Separation Specification For Internal Review	0d		27-Oct-06 A
A1700	Produce Network Rail Strategy & Management Plan	29d	18-Jul-07 A	30-Aug-07 A
A1710	Issue Network Rail Strategy & Management Plan to tie	0d		31-Aug-07 A
A1750	Produce BAA Strategy & Management Plan	32d	03-Aug-07 A	20-Sep-07 A
A1760	Issue BAA Strategy & Management Plan to tie	0d		21-Sep-07 A
A2150	Produce Forth Ports Strategy & Management Plan	19d	24-Aug-07 A	21-Sep-07 A
A2230	Issue Forth Ports Strategy & Management Plan to tie	0d		21-Sep-07 A
A4290	Produce BAA Interface Report	38d	10-Sep-07 A	02-Nov-07 A
A4300	Issue BAA Interface Report to tie	0d		02-Nov-07 A
A4310	Produce Forth Ports Interface Report	42d	31-Aug-07 A	01-Nov-07 A
A4370	Issue Forth Ports Interface Report to tie	0d		02-Nov-07 A
A4500	Produce Utilities Interface Report	87d	28-Aug-07 A	14-Jan-08
A4580	Issue Utilities Interface Report to tie	0d		14-Jan-08
A6400	Issue Cable Separation Specification To tie	0d		19-Jul-07 A
SDS69390	Internal Review of Issue Cable Separation Specification	12d	02-Jul-07 A	18-Jul-07 A
General		78d	28-Oct-05 A	14-Feb-06 A
A003101	Highways	64d	28-Oct-05 A	01-Feb-06 A
A1000	Traction Voltage Selection - Technology Review (update to Client's Comments	9d	20-Dec-05 A	10-Jan-06 A
A1010	Electrical Nomenclature Report	7d	06-Feb-06 A	14-Feb-06 A
A1020	Electrical Operation Principles	7d	06-Feb-06 A	14-Feb-06 A
A1360	Issue Electrical Nomenclature Report	0d		14-Feb-06 A
A1370	Traction Voltage Selection - Technology Review	0d		10-Jan-06 A
Exemplar Substation Design		74d	22-May-06 A	31-Aug-06 A
A1730	Issue Detailed Design for Exemplar Substation Layout	0d		30-Jun-06 A
A4320	Produce Detailed Design for Exemplar Substation Layout	27d	22-May-06 A	30-Jun-06 A
A4350	tie Approval Period	19d	03-Jul-06 A	28-Jul-06 A
A4360	Receive & Update to tie Comments for Substation Detailed Design	22d	31-Jul-06 A	31-Aug-06 A
OLE (Task200.7)		615d	20-Dec-05 A	16-May-08
SDS22740	Equipment Options Report	121d	20-Dec-05 A	30-Jun-06 A
SDS22750	Building Fixings Report	109d	16-Jan-06 A	30-Jun-06 A
SDS22760	Technical Specification Report	109d	16-Jan-06 A	30-Jun-06 A
SDS22770	Prelim Plans for Cross Sections in Special Areas	109d	16-Jan-06 A	30-Jun-06 A
SDS22780	Produce Prelim Plans & Typical Cross Sections	88d	16-Jan-06 A	31-May-06 A
SDS22790	Produce Pantograph Technical Specification	34d	06-Mar-06 A	26-Apr-06 A
SDS22830	IDC OLE	69d	03-Jul-06 A	13-Oct-06 A
SDS22980	Issue Pantograph Technical Specification	0d		14-Jun-06 A
SDS24040	Issue Technical Specification Report	0d		30-Jun-06 A
SDS24050	Issue Typical Cross Sections Report (Inc. Special Areas)	0d		31-May-06 A
SDS24060	Issue Equipment Options Report	0d		30-Jun-06 A
SDS24070	Produce Material Take Off Report	9d	19-Jun-06 A	30-Jun-06 A
SDS24080	Issue Material Take Off Report	0d		30-Jun-06 A
SDS32150	Issue Building Fixing Report	0d		30-Jun-06 A
VO162 Extention of OLE Management due to Programme Change (Internal)		105d	05-Feb-07 A	29-Jun-07 A
A487108	VO162 Extension of OLE Management	95d	05-Feb-07 A	29-Jun-07 A
VO200 Prolongation of OLE Management Period (Internal)		61d	29-Jun-07 A	21-Sep-07 A
A487098	VO200 Extension of OLE Management	56d	29-Jun-07 A	21-Sep-07 A
VO237 Prolongation of OLE Management Period (Internal)		18d	24-Sep-07 A	17-Oct-07 A
A487118	VO237 Extension of OLE Management	17d	24-Sep-07 A	17-Oct-07 A
VO269 Prolongation of OLE Management Period (Internal)		15d	22-Oct-07 A	09-Nov-07 A
A487248	VO269 Extension of OLE Management	14d	22-Oct-07 A	09-Nov-07 A
VO275 Prolongation of OLE Management Period (Internal)		20d	12-Nov-07 A	07-Dec-07 A
A487278	VO275 Extension of OLE Management	19d	12-Nov-07 A	07-Dec-07 A
VO282 Prolongation of OLE Management Period (Internal)		27d	03-Dec-07 A	17-Jan-08 A
SDS81660	VO282 Extension of OLE Management	26d	03-Dec-07 A	17-Jan-08 A
VO297 Prolongation of OLE Management Period (Internal Not Approved)		28d	17-Dec-07 A	01-Feb-08
SDS82860	VO297 Extension to OLE Management	27d	17-Dec-07 A	01-Feb-08
VO235 Risk Review with OLE Sub-Section Design (Internal)		39d	11-Jun-07 A	02-Aug-07 A
A487178	VO235 Risk Assessment to Design in Sub-section by Sub-section	37d	11-Jun-07 A	02-Aug-07 A
VO239 Request for Attending a Meeting in Edinburgh (Internal)		15d	11-Jun-07 A	29-Jun-07 A
A487188	VO239 Meeting Preparation and Attendance	14d	11-Jun-07 A	29-Jun-07 A
VO240 OLE Programme Review (Internal - not PM approved)		15d	11-Jun-07 A	29-Jun-07 A
A487168	VO240 Review of V16 and impact on OLE deliverables	14d	11-Jun-07 A	29-Jun-07 A
VO249 OLE Pole Loading Calculation (Internal)		15d	10-Sep-07 A	28-Sep-07 A
A487208	VO249 Produce Pole Loading for SDS (Civils) Advanced Info	14d	10-Sep-07 A	28-Sep-07 A
VO298 OLE Pole Loading Calculation (Specials) (Internal Not Approved)		28d	17-Dec-07 A	01-Feb-08
A487288	VO298 Produce Pole Loading for Specials	27d	17-Dec-07 A	01-Feb-08
OLE General (Task200.7.1)		376d	31-Jul-06 A	25-Jan-08
A487028	DD - OLE Management	121d	31-Jul-06 A	05-Feb-07 A
SDS24130	Produce Dynamic Simulation Report	255d	11-Dec-06 A	17-Jan-08
SDS50760	Issue Dynamic Simulation Report	0d		17-Jan-08
SDS50770	Produce Final Technical & Pantograph Specifications	211d	25-Sep-06 A	17-Aug-07 A
SDS50780	Issue Final Technical & Pantograph Specifications	0d		17-Aug-07 A
SDS50790	Produce Final Building Fixings Report	266d	20-Oct-06 A	06-Dec-07 A
SDS50800	Issue Final Building Fixings Report	0d		07-Dec-07 A
SDS50830	Produce Pole Schedule - Loading Chart (Interim for PB Civils)	136d	31-Jul-06 A	27-Feb-07 A
SDS50840	Issue Pole Schedule - Loading Chart	0d		25-Jan-08*
SDS50880	Produce Pole Schedule - Loading Schedule (Final)	57d	13-Sep-07 A	06-Dec-07 A
SDS66840	IDCs, Review Panels, OLE Optioneering, Fix OLE Design To Latest PD Info	9d	14-Aug-06 A	25-Aug-06 A
SDS68270	OLE Alternative Design Building Fixings (690.1)	177d	31-Aug-06 A	05-Jun-07 A
SDS74060	Produce Design Commentary Report	14d	16-Nov-07 A	06-Dec-07 A
SDS74070	Issue Design Commentary Report	0d		25-Jan-08*
OLE Bases (Task200.7.2)		451d	07-Aug-06 A	16-May-08
OLE Bases General		451d	07-Aug-06 A	16-May-08
SDS52550	OLE Bases Civils Management	347d	07-Aug-06 A	30-Jan-08
SDS52560	Update Available Base Data/Info Re Alignment/Topo etc	5d	14-Jan-08	18-Jan-08
SDS52710	Prepare Specification Clauses	5d	08-May-08	14-May-08
SDS52720	Check Drawings	2d	15-May-08	16-May-08
SDS52730	Issue OLE Base Design to tie	0d		16-May-08
OLE Pile Designs		30d	21-Jan-08	29-Feb-08
SDS52580	Steel or Concrete Designs (3m, 4m, 6m, 8m Lengths)	9d	21-Jan-08	01-Feb-08
SDS52590	Concrete Reinforcement Design (3m, 4m, 6m, 8m Lengths)	9d	04-Feb-08	15-Feb-08

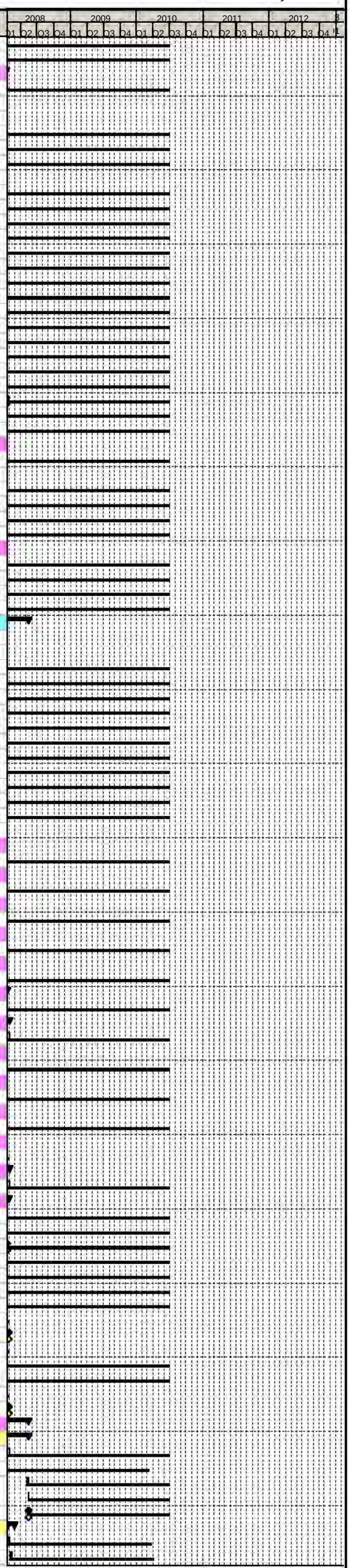

Primary Baseline
Actual Work
Remaining Work
Critical Remaining Work
Baseline Milestone
Milestone

Trams for Edinburgh
Connecting our Capital

Edinburgh Tram Project

SDS FULL DESIGN PROGRAMME @ V26

tie

Activity ID	Activity Name	Original Duration	Start	Finish
SDS52600	Detailed Design Draughting	9d	18-Feb-08	29-Feb-08
2 Spread Designs		27d	03-Mar-08	08-Apr-08
SDS52660	Base Design	14d	03-Mar-08	25-Mar-08
SDS52670	Concrete Reinforcement	5d	26-Mar-08	01-Apr-08
SDS52680	Detailed Design Drafting	5d	02-Apr-08	08-Apr-08
2 Special Designs		21d	09-Apr-08	07-May-08
SDS52690	Special Design	9d	09-Apr-08	22-Apr-08
SDS52700	Detailed Design Draughting	9d	23-Apr-08	07-May-08
Tram Stops		502d	20-Feb-06 A	11-Feb-08
Locations		147d	17-May-06 A	07-Dec-06 A
A1930	Issue Stop Location Feasibility Report	0d		30-Jun-06 A
A1940	tie Approval of Tram Stop Locations	19d	17-May-06 A	14-Jun-06 A
A1950	Receive & Update to tie Comments for Stop Locations	73d	21-Aug-06 A	07-Dec-06 A
A1960	Re-Issue Stop Location Feasibility Report	0d		07-Dec-06 A
Tram Stop Equipment & Finishes		199d	20-Feb-06 A	23-Nov-06 A
A1970	Produce Schedule of Typical Stop Equipment	23d	20-Feb-06 A	24-Mar-06 A
A1980	Produce Typical Stop Layouts & Finishes	55d	20-Feb-06 A	16-May-06 A
A1990	Produce Schedule of Site Specific Stop Equipment	21d	12-Apr-06 A	16-May-06 A
A2000	Issue Typical Stop Equipment Schedule	0d		19-Jun-06 A
A2010	Issue Typical Stop Layouts & Finishes	0d		30-Jun-06 A
A2020	tie Approval of Typical Stop Equipment Schedule	19d	17-May-06 A	14-Jun-06 A
A2030	Receive & Update to tie Comments for Typical Stop Equipment Schedule	5d	19-Jun-06 A	26-Jun-06 A
A2040	Re-Issue Typical Stop Equipment Schedule	0d		30-Jun-06 A
A2050	tie Approval of Typical Stop Layouts & Finishes	19d	17-May-06 A	14-Jun-06 A
A2060	Receive & Update to tie Comments for Typical Stop Layouts & Finishes	4d	20-Nov-06 A	23-Nov-06 A
A2070	Re-Issue Typical Stop Layouts & Finishes	0d		23-Nov-06 A
Exempler Island Platform Stop		218d	06-Mar-06 A	12-Jan-07 A
A2080	Outline Design for Exemplar Island Platform Stop	19d	06-Mar-06 A	31-Mar-06 A
A2090	Issue Preliminary Design to tie for Approval	0d		12-May-06 A
A2100	tie Approval Period	19d	17-May-06 A	14-Jun-06 A
A2110	Receive & Update to tie Comments for Tramstop Preliminary Design	5d	19-Jun-06 A	23-Jun-06 A
A2120	Produce Detailed Design for Exemplar Island Platform Stop	12d	03-Apr-06 A	21-Apr-06 A
A2130	tie Approval Period	111d	26-Jun-06 A	07-Dec-06 A
A2140	Receive & Update to tie Comments for Tramstop Detailed Design	19d	08-Dec-06 A	12-Jan-07 A
Exempler Side Platform Stop		224d	24-Feb-06 A	12-Jan-07 A
A2160	Outline Design for Exemplar Side Platform Stop	29d	24-Feb-06 A	07-Apr-06 A
A2170	Issue Preliminary Design to tie for Approval	0d		03-May-06 A
A2180	tie Approval Period	19d	17-May-06 A	14-Jun-06 A
A2190	Receive & Update to tie Comments for Tramstop Preliminary Design	5d	26-Jun-06 A	30-Jun-06 A
A2200	Produce Detailed Design for Exemplar Side Platform Stop	4d	14-Apr-06 A	21-Apr-06 A
A2210	tie Approval Period	106d	03-Jul-06 A	07-Dec-06 A
A2220	Receive & Update to tie Comments for Tramstop Detailed Design	19d	08-Dec-06 A	12-Jan-07 A
VO18 Tramstop Locations CNB007 (Task950.1)		80d	14-Aug-06 A	01-Dec-06 A
VO1430	Environmental Study	74d	14-Aug-06 A	01-Dec-06 A
VO1440	Roads Study	74d	14-Aug-06 A	01-Dec-06 A
VO1450	Stops Study	5d	14-Aug-06 A	18-Aug-06 A
VO1460	Simulation Study	74d	14-Aug-06 A	01-Dec-06 A
VO1470	Track Study	74d	14-Aug-06 A	01-Dec-06 A
VO1500	Utiltities Study	74d	14-Aug-06 A	01-Dec-06 A
VO1530	Systems Study	74d	14-Aug-06 A	01-Dec-06 A
VO1540	Urban Design	74d	14-Aug-06 A	01-Dec-06 A
VO215 Changing Tramstop Names Not tie Approved		100d	14-Sep-07 A	11-Feb-08
VO1480	Recieve Change Order from tie for VO215	0d	14-Sep-07 A	
VO1490	Review and sign off of Documents and Drawings for Revised Tramstop Names	95d	14-Sep-07 A	11-Feb-08
Landscaping		195d	30-Apr-07 A	05-Feb-08
SDS53010	Specification Development	181d	30-Apr-07 A	05-Feb-08
SDS53020	Approvals Support	181d	30-Apr-07 A	05-Feb-08
Utilities		487d	20-Feb-06 A	21-Jan-08
UTIL010	Internal Briefing (Utilities)	5d	20-Feb-06 A	24-Feb-06 A
UTIL020	Intergrate GPR (Utilities)	81d	27-Feb-06 A	30-Jun-06 A
VO291 Utilities Meetings		24d	10-Dec-07 A	21-Jan-08
SDS82920	Utilities Meetings	23d	10-Dec-07 A	21-Jan-08
Network Rail Activities		398d	09-Jan-06 A	29-Jul-07 A
General		52d	30-Oct-06 A	18-Jan-07 A
A6390	Produce Network Rail Infrastructure Works Scope	50d	30-Oct-06 A	18-Jan-07 A
Framework Development Agreement Process		75d	09-Jan-06 A	21-Apr-06 A
A1170	tie Issue Request for Proposal	5d	09-Jan-06 A	13-Jan-06 A
A1200	Network Rail respond with Works Proposal	9d	16-Jan-06 A	27-Jan-06 A
A1230	Network Rail accept Draft Works Proposal	14d	06-Feb-06 A	24-Feb-06 A
A1250	tie issue draft Works Instruction	5d	30-Jan-06 A	03-Feb-06 A
A1420	Network Rail Investment Authority	0d	10-Mar-06 A	
A1430	Agree Works Contract & amend Framework Development Agreement	27d	10-Mar-06 A	21-Apr-06 A
Possessions		368d	20-Feb-06 A	29-Jul-07 A
A1320	Initial Possession Requirement to Network Rail	6d	20-Feb-06 A	28-Feb-06 A
A1340	Finalise Possession requirements for 3no. Structures	34d	28-Feb-06 A	21-Apr-06 A
A1400	Network Rail Confirm Draft Possession Request	9d	19-Jun-06 A	30-Jun-06 A
A1410	Submit Draft Possession Requirements to Network Rail	0d	05-Jun-06 A	
A1440	Submit Formal Possession Request to Network Rail	1d	05-Jun-06 A	05-Jun-06 A
A1450	Survey Leith Walk Under Network Rail Possession	0d	31-Jan-07 A	31-Jan-07 A
A1560	Survey For 4 Nights Under T3 Network Rail Possession	4d	08-Aug-06 A	11-Aug-06 A
A1740	Abutment Coring Survey Commences	5d	23-Jul-07 A	27-Jul-07 A
A6380	Geotechnical Investigation On Network Rail Land	123d	20-Jan-07 A	29-Jul-07 A
SDS24190	SDS Meeting with Network Rail to Agree Way Forward with Possessions	0d		05-Apr-06 A
SDS Support to Tram Selection (Task200.8)		391d	03-Jul-06 A	18-Jan-08
A567092	DD- SDS Support to Tram Selection	391d	03-Jul-06 A	18-Jan-08
Architecture Management (Task200.9)		386d	31-Jul-06 A	08-Feb-08
A486858	DD - Architecture Management	358d	31-Jul-06 A	08-Feb-08
EMC (Task200.10)		391d	31-Jul-06 A	15-Feb-08
A486988	DD - EMC Management	350d	31-Jul-06 A	28-Jan-08
A487198	VO198 EMC Interface Doc additional hours	144d	06-Jul-07 A	15-Feb-08
System Engineering		619d	03-Jul-06 A	04-Dec-08
Detailed Design Phase Planning		101d	03-Jul-06 A	20-Nov-06 A
SDS67850	Detailed Design Phase Planning	94d	03-Jul-06 A	20-Nov-06 A
Requirements Test Specification		619d	03-Jul-06 A	03-Dec-08
A10770	Development and Approval of Test Statement by DTLs SDMs	370d	03-Jul-06 A	30-Jan-08
A10780	Update Requirements Test Specification After tie Comments	74d	03-Jul-06 A	20-Oct-06 A
A10820	Align SDS Test and Procurement System Test Specification for Comprehensive and Complete Test Regime	361d	03-Jul-06 A	16-Jan-08
A10830	RAMS Requirements Tests	370d	03-Jul-06 A	30-Jan-08
A10870	Requirements Test Specification Update	572d	03-Jul-06 A	03-Dec-08
SDS68180	Issue Requirements Test Specification Ready To tie (second issue)	0d		03-Dec-08
SDS82900	Issue Requirements Test Specification Ready To tie (first issue)	0d		24-Jan-08
System Engineering Management Reporting and Meetings		609d	03-Jul-06 A	20-Nov-08
SDS68130	Systems Engineering Reporting and Meetings	563d	03-Jul-06 A	20-Nov-08

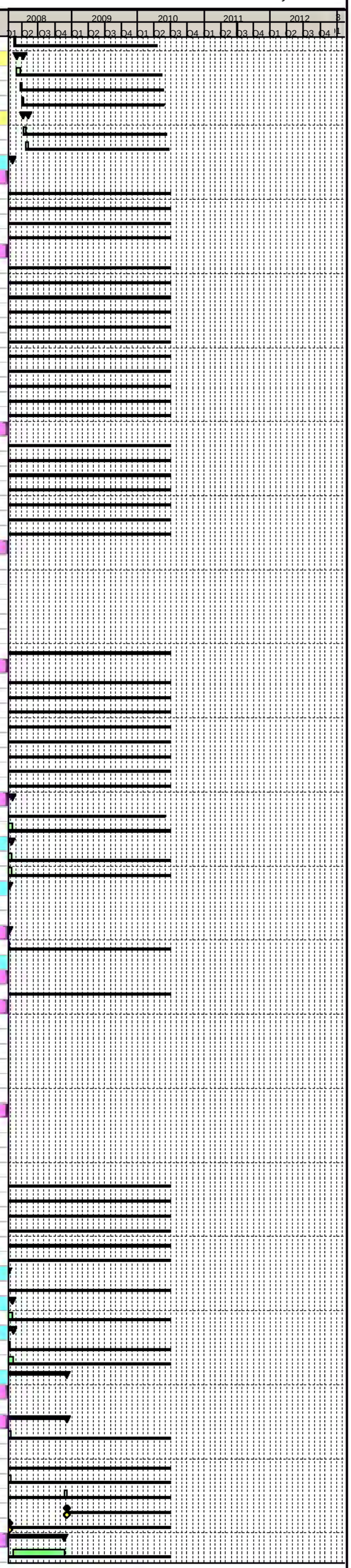

Primary Baseline
Actual Work
Remaining Work
Critical Remaining Work
Baseline Milestone
Milestone

Trams for Edinburgh ..connecting our Capital

Edinburgh Tram Project

SDS FULL DESIGN PROGRAMME @ V26

tie

Activity ID	Activity Name	Original Duration	Start	Finish
System Integration		609d	03-Jul-06 A	20-Nov-08
A10890	System Architecture - DTL Review and Approve System Architecture	361d	03-Jul-06 A	16-Jan-08
A10910	System Architecture - Response To tie Review of System Architecture Rev 1 Submission	94d	03-Jul-06 A	20-Nov-06 A
A10920	System Architecture - Update and Review Against Design	361d	03-Jul-06 A	16-Jan-08
A10950	Interface Report - Agree Format of Detailed Design Phase Integration Report	271d	03-Jul-06 A	24-Aug-07 A
A10960	Interface Report - Detailed Design Phase End Interface Report	563d	03-Jul-06 A	20-Nov-08
A10970	Interface Specifications - Template and Guidance	150d	03-Jul-06 A	20-Feb-07 A
A10980	Interface Specification - Agree Lower Level Interface Issues Which Require Escalation To Write Interface Specification	563d	03-Jul-06 A	20-Nov-08
A10990	Interface Specifications - Facilitation of Interface Specifications	563d	03-Jul-06 A	20-Nov-08
A11000	Interface Specifications - Review and Approval of Interface Specification Document	563d	03-Jul-06 A	20-Nov-08
SDS68000	System Integration Plan - Update	362d	03-Jul-06 A	17-Jan-08
SDS68010	System Integration Plans - ETNIP First Draft Agreed With tie	213d	03-Jul-06 A	30-May-07 A
SDS68020	System Integration Plans - ETNIP - Detailed Design Phase 1st Submission	250d	03-Jul-06 A	25-Jul-07 A
SDS68070	Syst Arch - System Design Description For Inclusion in System Architecture Specification and Submitted As An Update	362d	03-Jul-06 A	17-Jan-08
SDS68080	Interface Report - Response To tie Review Of Baseline 1 Interface Report	94d	03-Jul-06 A	20-Nov-06 A
SDS68090	Interface Report - Agree L1 L2 Specifications To Be Written	94d	03-Jul-06 A	20-Nov-06 A
SDS68100	Interface Register	563d	03-Jul-06 A	20-Nov-08
SDS68150	Issue System Integration Plan To tie	0d		18-Jan-08*
SDS68160	System Interface Register Baseline Ready to Issue To tie	0d		20-Nov-08
SDS68190	Issue Edinburgh Tram Network Integration Plan (1st Submission) to tie	0d		17-Jul-07 A
SDS74230	System Integration Plans - ETNIP - Detailed Design Phase 2nd Submission	362d	03-Jul-06 A	17-Jan-08
SDS74240	Issue Edinburgh Tram Network Integration Plan (2nd Submission) to tie	0d		18-Jan-08*
SDS82880	Issue System Architecture Specification Plan to tie	0d		18-Jan-08*
SDS82930	Issue System Interface Register Baseline To tie (1st Submmission)	0d		25-Jan-08*
Verification and Validation		619d	03-Jul-06 A	04-Dec-08
A11080	Update Verification and Validation Plan - Detailed Design Phase	361d	03-Jul-06 A	16-Jan-08
A11110	SDDR Support	20d	05-Nov-08	04-Dec-08
A11120	Detailed Design Verification and Validation Report	10d	05-Nov-08	20-Nov-08
A11140	IDR Support	294d	23-Nov-06 A	28-Feb-08
A11300	Issue Verification and Validation Plan to tie	0d		18-Jan-08
SDS68110	Preliminary Design Phase End Review Close Out	213d	03-Jul-06 A	30-May-07 A
SDS68250	Detailed Design Phase End Review Plan	362d	03-Jul-06 A	17-Jan-08
SDS82870	Issue System Detailed Design Review Plan to tie	0d		18-Jan-08
Requirements Change Control		609d	03-Jul-06 A	20-Nov-08
SDS68120	Requirements Change Control	563d	03-Jul-06 A	20-Nov-08
Requirements Database		609d	03-Jul-06 A	20-Nov-08
SDS67880	PBRMS Tool Upgrade	138d	03-Jul-06 A	01-Feb-07 A
SDS67890	RDB Baseline 3 Report	368d	03-Jul-06 A	28-Jan-08
SDS67900	Update BL2 Report From tie Comments	94d	03-Jul-06 A	20-Nov-06 A
SDS68170	Issue Requirements Database Baseline 3 To tie (second issue)	0d		20-Nov-08
SDS82890	Issue Requirements Database Baseline 3 To tie (first issue)	0d		28-Jan-08
SDS Requirements Traceability Analysis		389d	03-Jul-06 A	16-Jan-08
SDS67870	SDS Requirements Traceability Analysis	361d	03-Jul-06 A	16-Jan-08
Systems Assurance (100.5)		526d	03-Jul-06 A	25-Jul-08
Non RAMS		479d	03-Jul-06 A	21-May-08
SDS67030	Verification and Validation Plan Updates	362d	03-Jul-06 A	17-Jan-08
SDS67040	SDDR (System Detailed Design Phase End Review)	19d	23-Apr-08*	21-May-08
RAM		441d	03-Jul-06 A	28-Mar-08
SDS66970	Reliability Apportionment	391d	03-Jul-06 A	29-Feb-08
SDS67000	Systems Assurance and Design Team Leader Meetings	372d	03-Jul-06 A	01-Feb-08
RAMP		432d	03-Jul-06 A	17-Mar-08
SDS66960	Prepare RAMP	365d	03-Jul-06 A	22-Jan-08
SDS74630	Issue Reliability Availability Maintainability Plan to tie	0d		23-Jan-08*
SDS74920	tie Approval Period for Reliability Availability Maintainability Plan	19d	24-Jan-08	20-Feb-08
SDS74930	Receive Comments for Reliability Availability Maintainability Plan	0d	21-Feb-08	
SDS74940	Update Reliability Availability Maintainability Plan to tie comments	16d	21-Feb-08	14-Mar-08
SDS74950	Final Detailed Design Stage Issue of Reliability Availability Maintainability Plan to tie	0d		17-Mar-08
RAM Analysis		440d	03-Jul-06 A	27-Mar-08
SDS66980	RAM Analysis / Reporting of SDS Designed Equipment	368d	03-Jul-06 A	28-Jan-08
SDS74960	Issue RAM Analysis to tie	0d		29-Jan-08
SDS74970	tie Approval Period for RAM Analysis	19d	30-Jan-08	26-Feb-08
SDS74980	Receive Comments for RAM Analysis	0d	27-Feb-08	
SDS74990	Update RAM Anlysis to tie comments	18d	27-Feb-08	26-Mar-08
SDS75000	Final Detailed Design Stage Issue of RAM Analysis to tie	0d		27-Mar-08
RDP		168d	30-Jul-07 A	28-Mar-08
SDS66990	RDP and RDTP Preparation - System Wide	116d	30-Jul-07 A	28-Jan-08
SDS75010	Issue RDP to tie	0d		28-Jan-08
SDS75020	tie Approval Period for RDP	19d	29-Jan-08	25-Feb-08
SDS75030	Receive Comments for RDP	0d	26-Feb-08	
SDS75040	Update RDP to tie comments	20d	26-Feb-08	27-Mar-08
SDS75050	Final Detailed Design Stage Issue of RDP to tie	0d		28-Mar-08
General RAMS		481d	03-Jul-06 A	23-May-08
SDS67010	Prepare Procurement Specifications	262d	03-Jul-06 A	10-Aug-07 A
SDS67020	Management and Review of Suppliers Contractor (particularly Tram) RAMS issues/analyses	193d	27-Oct-06 A	24-Aug-07 A
SDS68200	IDR Meetings	352d	20-Nov-06 A	23-May-08
SDS68210	Requirements Test Specification Review 1	9d	14-Jan-08*	25-Jan-08
SDS68220	Requirements Test Specification Review 2	9d	14-Jan-08*	25-Jan-08
SDS68230	Information / Data Collection and Analysis	363d	03-Jul-06 A	18-Jan-08
Systems Assurance Management		526d	03-Jul-06 A	25-Jul-08
SDS66850	Systems Assurance Management	486d	03-Jul-06 A	25-Jul-08
System Safety		491d	03-Jul-06 A	06-Jun-08
SDS66880	HMRI Meetings	448d	03-Jul-06 A	30-May-08
SDS66930	Safety Audits / Walk Throughs	344d	29-Aug-06 A	15-Feb-08
SSMP		446d	03-Jul-06 A	04-Apr-08
SDS66860	SSMP	365d	03-Jul-06 A	22-Jan-08
SDS74620	Issue System Safety Management Plan to tie	0d		23-Jan-08*
SDS74780	tie approval period for SSMP	19d	24-Jan-08	20-Feb-08
SDS74790	Receive Comments for SSMP	0d	21-Feb-08	
SDS74800	Update System Safety Management Plan to tie comments	27d	21-Feb-08	03-Apr-08
SDS74810	Final DD Stage Issue of System Safety Management Plan to tie	0d		04-Apr-08
Safety Analysis		448d	03-Jul-06 A	08-Apr-08
SDS66890	Safety Analysis / Reporting of SDS Designed Equipment	368d	03-Jul-06 A	28-Jan-08
SDS67060	Issue Safety Analysis to tie	0d		28-Jan-08
SDS74820	tie approval period for Safety Analysis	19d	29-Jan-08	25-Feb-08
SDS74830	Receive Comments for Safety Analysis	0d	26-Feb-08	
SDS74840	Update Safety Analysis to tie comments	26d	26-Feb-08	07-Apr-08
SDS74850	Final DD Stage Issue of Safety Analysis to tie	0d		08-Apr-08
Hazard log		461d	03-Jul-06 A	25-Apr-08
SDS66900	Hazard Log Management	427d	03-Jul-06 A	25-Apr-08
SDS67100	Prepare Hazard Log Report	9d	15-Jan-08*	28-Jan-08
SDS74860	Issue Hazard Log Report to tie	0d		28-Jan-08
SDS74870	tie Approval Period for Hazard Log Report	19d	29-Jan-08	25-Feb-08
SDS74880	Receive Comments for Hazard Log Report	0d	26-Feb-08	

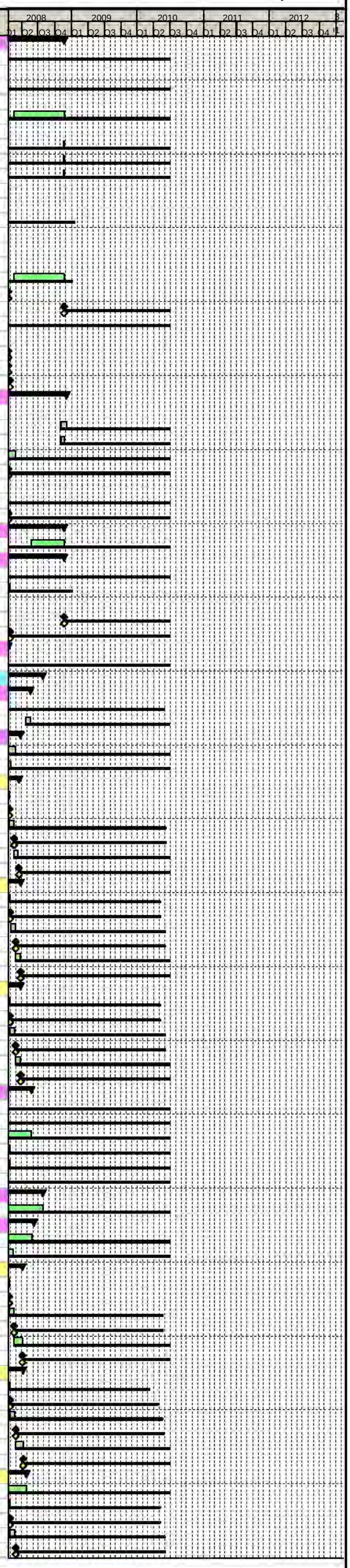

Primary Baseline
Actual Work
Remaining Work
Critical Remaining Work
Baseline Milestone
Milestone

Trams for Edinburgh
...connecting our Capital

Edinburgh Tram Project

SDS FULL DESIGN PROGRAMME @ V26

tie

Activity ID	Activity Name	Original Duration	Start	Finish
SDS74890	Updates Hazard Log Report to tie Comments	19d	26-Feb-08	26-Mar-08
SDS74900	Final DD stage issue of HL report to tie	0d		25-Apr-08
DDCS		491d	03-Jul-06 A	06-Jun-08
SDS66910	PSCC Meetings	431d	03-Jul-06 A	02-May-08
SDS66920	Preliminary Case For Safety	377d	03-Jul-06 A	08-Feb-08
SDS66940	Detailed Design Case For Safety Preparation	28d	11-Feb-08	25-Mar-08
SDS66950	Update Detailed Design Case for Safety to Comments	27d	24-Apr-08	05-Jun-08
SDS68240	Final DD PSCC Meeting	1d	29-May-08	29-May-08
SDS74540	Issue Detailed Design Case For Safety to tie	0d		26-Mar-08
SDS74550	Detailed Design Case for Safety Approval Period	19d	27-Mar-08	23-Apr-08
SDS74560	Receive Comments for Detailed Design Case for Safety	0d		23-Apr-08
SDS74570	Final Detailed Design stage issue of DDCS to tie	0d		06-Jun-08
SDS74910	Issue Detailed Design Case For Safety to PSCC	0d		28-May-08
Track Auxiliary (Task200.12)		397d	03-Jul-06 A	28-Jan-08
SDS63640	Track Auxiliary (Inc Spec, Heating, Motors & Detection)	284d	03-Jul-06 A	14-Sep-07 A
SDS63650	Issue Track Auxiliary Report to tie	0d		14-Sep-07 A
SDS63660	Track Auxiliary support to other disciplines	53d	01-Nov-07 A	28-Jan-08
VO241 Phase 1a/1b Separation		59d	18-Sep-07 A	07-Dec-07 A
SDS79090	Review of Budget and Commercial Impact	6d	29-Nov-07 A	07-Dec-07 A
SDS79100	Review of Cable Ducting	14d	19-Nov-07 A	07-Dec-07 A
SDS79110	Review of Documentation	14d	19-Nov-07 A	07-Dec-07 A
SDS79120	Review of Drainage	23d	05-Nov-07 A	07-Dec-07 A
SDS79130	Review of Landscaping	19d	12-Nov-07 A	07-Dec-07 A
SDS79140	Review of Low Voltage Supplies	19d	12-Nov-07 A	07-Dec-07 A
SDS79150	Review of OLE	38d	15-Oct-07 A	07-Dec-07 A
SDS79160	Review of SCC	19d	12-Nov-07 A	07-Dec-07 A
SDS79170	Review of Structures	19d	12-Nov-07 A	07-Dec-07 A
SDS79180	Review of Track Alignment	38d	15-Oct-07 A	07-Dec-07 A
SDS79190	Review of Track Auxillaries	5d	15-Oct-07 A	19-Oct-07 A
SDS79200	Review of Trackside Cabling	19d	12-Nov-07 A	07-Dec-07 A
SDS79210	Produce Separation Phase 1a and 1b Impact Report	19d	12-Nov-07 A	07-Dec-07 A
SDS79220	Issue Separation Phase 1a and 1b Impact Report to tie	0d		07-Dec-07 A
VO241 Traction Power		24d	18-Sep-07 A	19-Oct-07 A
SDS78950	Task Management	23d	18-Sep-07 A	19-Oct-07 A
SDS78960	Prepare Report	15d	28-Sep-07 A	19-Oct-07 A
SDS78970	Leith Study	7d	01-Oct-07 A	09-Oct-07 A
SDS78980	Russell Road Study	6d	10-Oct-07 A	17-Oct-07 A
SDS78990	Electrical Operations Review	8d	03-Oct-07 A	15-Oct-07 A
SDS79000	Protection Review	3d	10-Oct-07 A	13-Oct-07 A
SDS79010	Related Document Review	4d	10-Oct-07 A	15-Oct-07 A
SDS79020	Brainstorming Meeting	1d	27-Sep-07 A	27-Sep-07 A
VO136 Structures Design Charette		1d	14-Feb-07 A	14-Feb-07 A
VO1640	Structures Design Charette	1d	14-Feb-07 A	14-Feb-07 A
VO102 Review of Employers Requirements With SDS Technical Specifications CNS030		10d	06-Feb-07 A	19-Feb-07 A
VO1550	Review of Employers Requirements Documentation	9d	06-Feb-07 A	19-Feb-07 A
VO1560	Issue Employers Requirements Review Document to tie	0d		19-Feb-07 A
VO83 Cable Coordination		159d	22-Jun-07 A	08-Feb-08
VO2620	Cable Coordination	149d	22-Jun-07 A	08-Feb-08
VO299 tie Employers Requirements V3 Review		10d	04-Jan-08 A	17-Jan-08
VO2770	tie Employers Requirements V3 review	9d	04-Jan-08 A	17-Jan-08
Haymarket to Newhaven Road - Section 1 (Task300)		986d	19-Sep-05 A	28-Jul-09
Section Wide - Section 1		631d	27-Apr-06 A	15-Oct-08
Section Wide		631d	27-Apr-06 A	15-Oct-08
Preliminary Design Approvals		102d	27-Apr-06 A	15-Sep-06 A
SDS23100	Track IDC	33d	03-Jul-06 A	18-Aug-06 A
SDS23110	Roads IDC	28d	03-Jul-06 A	11-Aug-06 A
SDS23130	Structures IDC	51d	03-Jul-06 A	15-Sep-06 A
SDS23140	Tramstops IDC	38d	03-Jul-06 A	25-Aug-06 A
SDS23150	Substation IDC	4d	02-Jun-06 A	08-Jun-06 A
SDS23190	PD - Submit Section 1 Substation Deliverables	0d		30-Jun-06 A
SDS23520	tie Approval (Including Structures)	19d	03-Jul-06 A	28-Jul-06 A
SDS23540	Informal Consultation with tie	38d	27-Apr-06 A	23-Jun-06 A
SDS24180	tie Approval (Excluding Structures)	19d	03-Jul-06 A	28-Jul-06 A
SDS34140	PD - Submit Section 1 Track Deliverables	0d		30-Jun-06 A
SDS34150	PD - Submit Section 1 Tramstops Deliverables	0d		30-Jun-06 A
SDS34160	PD - Submit Section 1 Roads Deliverables	0d		30-Jun-06 A
SDS34170	PD - Submit Section 1 Structures Deliverables	0d		30-Jun-06 A
SDS34180	PD - Section 1 Complete - Issue to tie	0d		30-Jun-06 A
OLE (Task300.1)		322d	29-Aug-06 A	30-Nov-07 A
SDS31280	Produce Final Detailed Layout Plans	289d	29-Aug-06 A	16-Nov-07 A
SDS51380	Issue Notification Of Completion Letter-Final Detailed Layout Plans & Standard & Special Cross Sections to tie Sec1	0d		30-Nov-07 A
SDS59420	Finalise Combined Pole Design (With Street Lighting Traffic Signals)	5d	22-Nov-07 A	29-Nov-07 A
SDS69420	SDM Design Interface Review Meetings	1d	01-Dec-06 A	02-Dec-06 A
Stakeholder Reviews		399d	17-Jul-06 A	15-Feb-08
A569660	Review Potential Issues with tie & Determine Consultation Strategy	9d	17-Jul-06 A	28-Jul-06 A
A569730	Review Potential Issues with tie & Determine Consultation Strategy	147d	02-Jul-07 A	14-Feb-08
A569740	Feedback to Design Teams for Study	138d	16-Jul-07 A	15-Feb-08
SDS23170	Stakeholder Review	215d	31-Jul-06 A	29-Jun-07 A
Design Assurance Review		10d	02-Oct-08	15-Oct-08
SDS72270	Produce Section Wide Design Assurance Statement	9d	02-Oct-08	15-Oct-08
FOW - NER - Section 1A (Task300.2)		986d	19-Sep-05 A	28-Jul-09
Sub Section Wide		698d	07-Mar-06 A	26-Nov-08
Sub Section Wide IDC		18d	31-Mar-08	23-Apr-08
A40161	Subsection Wide IDC	17d	31-Mar-08	23-Apr-08
Design Assurance Review		10d	18-Sep-08	01-Oct-08
SDS67910	Produce Design Assurance Statement	9d	18-Sep-08	01-Oct-08
Consents & Approvals		382d	31-May-07 A	26-Nov-08
Prior Approvals		342d	31-May-07 A	02-Oct-08
Combined Section Prior Approval		60d	10-Jul-08	02-Oct-08
A25100	Receive Combined Package 1A Comments From CEC	0d		04-Sep-08
A25130	Prior Approval Granted for Section 1A Combined Package	0d		02-Oct-08
A25210	Issue Combined Package 1A for Prior Approval to CEC	0d		10-Jul-08
A40100	CEC Approval Period - 1A Combined Package	38d	10-Jul-08	04-Sep-08
A40130	Update 1A Combined Package to CEC Comments	19d	04-Sep-08	02-Oct-08
Batch 1/01		50d	05-Jun-08	14-Aug-08
SDS75208	Batch 1/01 Newhaven - Collation of Planning Drawings	9d	05-Jun-08*	18-Jun-08
SDS75209	Issue Batch 1/01 For Approval to CEC	0d	19-Jun-08	
SDS75210	Batch 1/01 Formal Approval Period	38d	19-Jun-08	13-Aug-08
SDS75220	Receive CEC Prior Approval For Batch 1/01	0d	14-Aug-08	
Batch 1/02		53d	29-Feb-08	14-May-08
SDS77660	Batch 1/02 Formal Approval Period	38d	14-Mar-08	13-May-08
SDS77670	Issue Batch 1/02 For Approval to CEC	0d	14-Mar-08	
SDS77680	Receive CEC Prior Approval For Batch 1/02	0d	14-May-08	

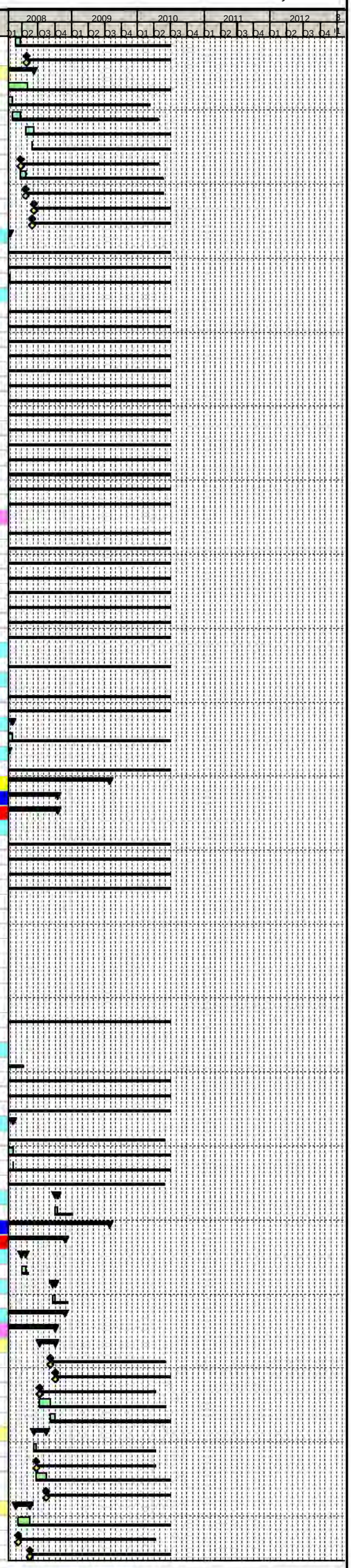

Primary Baseline
Actual Work
Remaining Work
Critical Remaining Work
Baseline Milestone
Milestone

Trams for Edinburgh
...connecting our Capital

Edinburgh Tram Project

SDS FULL DESIGN PROGRAMME @ V26

tie

Activity ID	Activity Name	Original Duration	Start	Finish
SDS77710	Batch 1/02 Ocean Terminal - Collation of Planning Drawings	9d	29-Feb-08	13-Mar-08
Batch 1/03 Tram North Leith Sands Substation		29d	31-May-07 A	11-Jul-07 A
A27830	Issue Tram North Leith Sands Substation Design for Prior Approval	0d		31-May-07 A
A27840	Prior Approval For Tram North Leith Sands Substation	0d		11-Jul-07 A
A27850	Receive Tram North Leith Sands Substation CEC Comments (No Comments)	0d		11-Jul-07 A
A41090	Batch 1/03 Formal Approval Period	27d	01-Jun-07 A	11-Jul-07 A
A44650	Incorporate Tram North Leith Sands Substation CEC Comments for Prior Approval (No Comments)	1d	11-Jul-07 A	11-Jul-07 A
Batch 1/04		51d	26-Jun-08	05-Sep-08
SDS77780	Batch 1/04 Formal Approval Period	38d	10-Jul-08	04-Sep-08
SDS77790	Issue Batch 1/04 For Approval to CEC	0d	10-Jul-08	
SDS77800	Receive CEC Prior Approval For Batch 1/04	0d	05-Sep-08	
SDS77830	Batch 1/04 Victoria Dock Bridge - Collation of Planning Drawings	9d	26-Jun-08*	09-Jul-08
Batch 1/05		47d	23-May-08	29-Jul-08
SDS77840	Batch 1/05 Formal Approval Period	38d	03-Jun-08	28-Jul-08
SDS77850	Issue Batch 1/05 For Approval to CEC	0d	03-Jun-08	
SDS77860	Receive CEC Prior Approval For Batch 1/05	0d	29-Jul-08	
SDS77890	Batch 1/05 Tower Place Bridge - Collation of Planning Drawings	6d	23-May-08	02-Jun-08
Batch 1/06		47d	28-Jan-08	02-Apr-08
SDS77900	Batch 1/06 Formal Approval Period	38d	04-Feb-08	01-Apr-08
SDS77910	Issue Batch 1/06 For Approval to CEC	0d	04-Feb-08	
SDS77920	Receive CEC Prior Approval For Batch 1/06	0d	02-Apr-08	
SDS77950	Batch 1/06 Port of Leith Tramstop - Collation of Planning Drawings	5d	28-Jan-08	01-Feb-08
Batch 1/07		52d	16-Jan-08	28-Mar-08
SDS77960	Batch 1/07 Formal Approval Period	38d	30-Jan-08	27-Mar-08
SDS77970	Issue Batch 1/07 For Approval to CEC	0d	30-Jan-08	
SDS77980	Receive CEC Prior Approval For Batch 1/07	0d	28-Mar-08	
SDS78010	Batch 1/07 Bernard Street Tramstop - Collation of Planning Drawings	9d	16-Jan-08*	29-Jan-08
Batch 1/08		115d	19-Oct-07 A	08-Apr-08
SDS78020	Batch 1/08 Formal Approval Period	38d	08-Feb-08	07-Apr-08
SDS78030	Issue Batch 1/08 For Approval to CEC	0d	08-Feb-08	
SDS78040	Receive CEC Prior Approval For Batch 1/08	0d	08-Apr-08	
SDS78070	Batch 1/08 Foot of the Walk Tramstop - Collation of Planning Drawings	69d	19-Oct-07 A	07-Feb-08
Roads, Track, OLE, Landscaping, Street Lighting		153d	20-Aug-07 A	28-Mar-08
SDS24700	Informal Consultation With CEC & tie Over Prior Approval for Roads, Track, OLE, Landscaping and Street Lighting	142d	20-Aug-07 A	28-Mar-08
Tram Stop Bernard Street		103d	20-Aug-07 A	18-Jan-08
A40080	Informal Consultation With CEC & tie over Prior Approval for Tram Stop Bernard Street	97d	20-Aug-07 A	18-Jan-08
Tram Stop Port Of Leith		102d	27-Aug-07 A	25-Jan-08
A40110	Informal Consultation With CEC & tie over Prior Approval Tram Stop Port Of Leith	97d	27-Aug-07 A	25-Jan-08
Tram Stop Ocean Terminal		40d	04-Feb-08	28-Mar-08
A40140	Informal Consultation With CEC & tie over Prior Approval Tram Stop Ocean Terminal	38d	04-Feb-08	28-Mar-08
Tram Stop Newhaven		40d	14-Jan-08	07-Mar-08
A40170	Informal Consultation With CEC & tie over Prior Approval Tram Stop Newhaven	38d	14-Jan-08	07-Mar-08
Lindsay Road Retaining Wall Structure		40d	23-May-08	17-Jul-08
A13190	Commence Lindsay Road RW Informal Consultation With CEC & tie Over Prior Approval	37d	23-May-08	17-Jul-08
Tram Stop Foot of the Walk		113d	27-Aug-07 A	11-Feb-08
A40230	Informal Consultation With CEC & tie over Prior Approval Tram Stop Foot of the Walk	107d	27-Aug-07 A	11-Feb-08
Technical Approvals		195d	28-Feb-08	26-Nov-08
Victoria Dock (TAA)		90d	19-Jun-08	22-Oct-08
A7070	Issue Victoria Dock Design Package to TAA	0d		13-Aug-08
A7080	TAA Victoria Dock Design Package Review Period	38d	14-Aug-08	08-Oct-08
A7090	Receive Victoria Dock Design Package Comments from TAA	0d		08-Oct-08
A7100	Incorporate TAA Comments into Victoria Dock Design Package	9d	09-Oct-08	22-Oct-08
A7110	Commence Victoria Dock Informal Consultation With CEC Over Technical Approval	38d	19-Jun-08	13-Aug-08
Tower Place Bridge Review Period (TAA)		90d	24-Jul-08	26-Nov-08
A7400	Issue Tower Place Bridge Superstructure Design Package to TAA	0d		17-Sep-08
A7410	TAA Tower Place Bridge Superstructure Design Package Review Period	38d	18-Sep-08	12-Nov-08
A7420	Receive Tower Place Bridge Superstructure Design Package Comments from TAA	0d		12-Nov-08
A7430	Incorporate TAA Comments into Tower Place Bridge Superstructure Design Package	9d	13-Nov-08	26-Nov-08
A7440	Commence Tower Place Bridge Superstructure Informal Consultation With CEC Over Technical Approval	38d	24-Jul-08	17-Sep-08
Lindsay Road Retaining Wall Structure Review Period (TAA)		94d	22-May-08	30-Sep-08
A7730	Issue Lindsay Road RW Design Package to TAA	0d		17-Jul-08
A7740	TAA Lindsay Road RW Design Package Review Period	39d	18-Jul-08	15-Sep-08
A7750	Receive Lindsay Road RW Design Package Comments from TAA	0d		15-Sep-08
A7760	Incorporate TAA Comments into Lindsay Road RW Design Package	10d	16-Sep-08	30-Sep-08
A8210	Commence Lindsay Road RW Informal Consultation With CEC Over Technical Approval	38d	22-May-08	17-Jul-08
Roads inc Drainage Technical Approval		104d	28-Feb-08	22-Jul-08
SDS24710	Roads Authority Informal Consultation	38d	28-Feb-08	25-Apr-08
SDS24720	Issue Roads Design to Roads Authority for Approval	0d		25-Apr-08
SDS24730	Roads Authority Approval Period	38d	28-Apr-08	24-Jun-08
SDS24740	Receive Roads Authority Comments	0d		24-Jun-08
SDS24750	Update to Roads Authority Comments	19d	25-Jun-08	22-Jul-08
SDS24820	Roads Technical Approval Granted	0d		22-Jul-08
Track (Task300.2.1)		476d	13-Mar-06 A	25-Jan-08
A2240	First Pass Mx Horizontal and Vertical Alignment	45d	13-Mar-06 A	22-May-06 A
A2250	Handover Alignment Design P Way to Roads & Issue to tie	0d		23-May-06 A
A2260	Coordination Meeting/Workshop Between PWay/Roads & Resolution of Major Conflicts	1d	23-May-06 A	23-May-06 A
SDS24400	Revise Alignment to Match Roads First Pass Vertical	3d	20-Dec-06 A	22-Dec-06 A
SDS24450	Handover Alignment Design Track to Roads	0d		22-Dec-06 A
SDS24840	Revise Alignment to Inc. Preliminary Design Comments	55d	07-Aug-06 A	27-Oct-06 A
SDS24860	Handover Alignment Design Track to Roads	0d		27-Oct-06 A
SDS56910	Issue Notification Of Completion Letter - Track Alignment Design to tie Section 1A	0d		25-Jan-08
SDS60550	Revise Track Alignment to Inc. Modelling Changes	0d	20-Dec-06 A	20-Dec-06 A
SDS69770	Revise Alignment to Inc. Preliminary Design Comments	10d	09-Feb-07 A	23-Feb-07 A
SDS69780	Handover Alignment Design Track to Roads	0d		23-Feb-07 A
SDS69790	Revise Alignment to Match Roads First Pass Vertical	18d	18-Dec-07 A	21-Jan-08
SDS69800	Handover Alignment Design Track to Roads	0d		21-Jan-08
SDS69870	Final Alignment to Match Roads & Check	171d	04-May-07 A	25-Jan-08
Roads, Street Lighting & Landscaping SubSections 1A1 & 1A2 (Task300.2.2)		658d	07-Mar-06 A	02-Oct-08
A2270	Route Appreciation/Junct Layout & Determine with tie & CEC Works Extent	44d	13-Mar-06 A	19-May-06 A
A2280	Frontage Surveys	30d	07-Mar-06 A	21-Apr-06 A
A2290	Set Up Mx Models	5d	22-May-06 A	26-May-06 A
A2300	Produce Preliminary Horizontal Road Alignment Design (Inc Lanes & Parking Zones)	8d	30-May-06 A	08-Jun-06 A
A2310	Preliminary Rd Junction Configuration Design	10d	09-Jun-06 A	23-Jun-06 A
A2320	Preliminary Road Safety Audit	2d	30-Jun-06 A	03-Jul-06 A
A2330	Review & Amend TRO Drawings & Schedules for Modifications Required Post Prelim Design	3d	12-Jun-06 A	14-Jun-06 A
A2340	Handover Alignment Design Roads to Pway	0d		04-Jul-06 A
A2350	Coordination Meeting/Workshop Between Roads & Pway Teams	1d	03-Jul-06 A	03-Jul-06 A
A5450	Undertake Road Marking, Pedestrian Req & Traffic Signalling Design	10d	15-Jun-06 A	15-Jun-06 A
SDS24410	Produce First Pass Vertical Alignment	172d	01-Mar-07 A	19-Nov-07 A
SDS24430	Handover Alignment Design Roads to Pway	0d		19-Nov-07 A
SDS24460	Revise Vertical Alignment to Match Final Track Alignment	5d	03-Jan-08 A	09-Jan-08 A
SDS24480	Horizontal & Vertical Alignment Design Complete	0d		09-Jan-08 A
SDS24490	Issue Notification Of Completion Letter- Roads Design to tie for Approval Section 1A1 & 1A2	0d		18-Jan-08

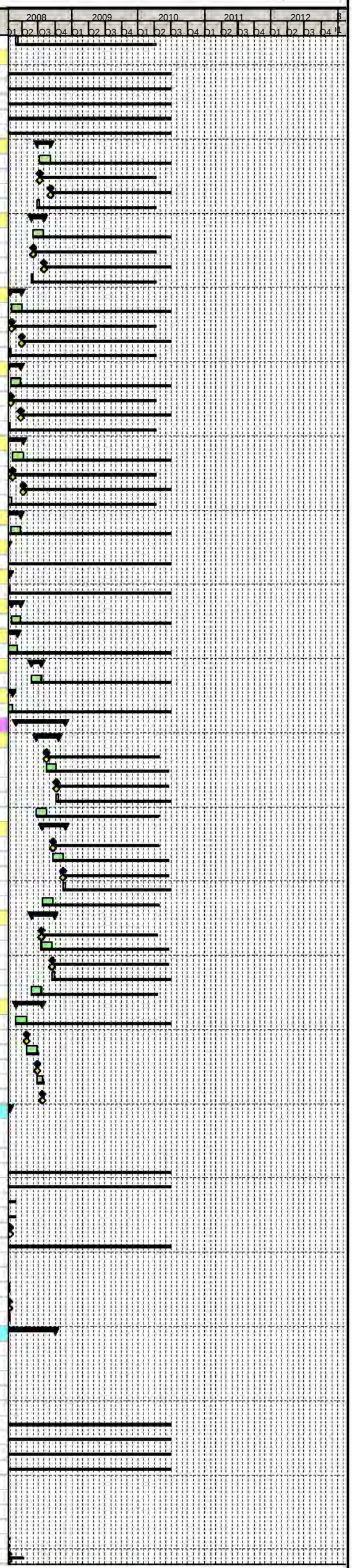

Primary Baseline
Actual Work
Remaining Work
Critical Remaining Work
Baseline Milestone
Milestone

Trams for Edinburgh
connecting our Capital

Edinburgh Tram Project

SDS FULL DESIGN PROGRAMME @ V26

tie

Activity ID	Activity Name	Original Duration	Start	Finish
SDS24500	Cross Check all Horizontal Design Aspects With Vertical Alignment	2d	17-Jan-08	18-Jan-08
SDS24540	Issue Construction Drawings	0d		02-Oct-08
SDS24570	Produce Site Clearance Drawings & Schedule	190d	01-Mar-07 A	17-Dec-07 A
SDS24580	Produce Fencing, Barriers & Guardrails Design	205d	01-Mar-07 A	16-Jan-08
SDS24590	Produce Street Lighting Design (& Liaise With OLE)	252d	01-Feb-07 A	27-Feb-08
SDS24600	Produce Traffic Signal Only Ducting	6d	09-Jan-08 A	16-Jan-08
SDS24610	Produce Soft Landscaping Design	99d	15-Aug-07 A	18-Jan-08
SDS24620	Produce Traffic Signals Layout	163d	08-May-07 A	16-Jan-08
SDS24630	Produce Traffic Signs Design (Signs, Markings, Signals)	205d	01-Mar-07 A	16-Jan-08
SDS24760	Produce Hard Landscaping Design	188d	11-Jun-07 A	28-Mar-08
SDS24870	Revise Alignment to Inc. Final Track Horizontal Alignment (Horizontal Design Freeze) & Issue to Substn Designers & Issue	3d	26-Feb-07 A	28-Feb-07 A
SDS24880	Produce Kerbs, Footway & Paved Area Design	205d	01-Mar-07 A	16-Jan-08
SDS24890	Produce Pavement Design	6d	09-Jan-08 A	16-Jan-08
SDS56160	Issue Notification Of Completion Letter- Hard & Soft Landscaping Design to tie Section 1A1 & 1A2	0d		28-Mar-08
SDS56740	Issue Notification Of Completion Letter- Street Lighting Design (Inc. Any OLE Combined Pole) to tie Section 1A1 & 1A2	0d		28-Feb-08
SDS59690	Advise Track, Stops, Modellers Changes To Accom RSA1 & PD Comments	16d	02-Oct-06 A	24-Oct-06 A
SDS59700	Pass Guidance/Envelope To Track & Others As Necessary	0d		24-Oct-06 A
SDS60350	Advise Track, Stops, Modellers Changes To Accom RSA1 & PD Comments	14d	25-Jan-07 A	14-Feb-07 A
SDS60360	Pass Guidance/Envelope To Track & Others As Necessary	0d		14-Feb-07 A
SDS60530	Revise Horizontal to Inc. Track Horizontal Alignment, RSA1 & PD Comments	48d	26-Oct-06 A	15-Jan-07 A
SDS67230	Street Lighting Survey Work	43d	29-Aug-06 A	31-Oct-06 A
SDS69810	Resolution of Red Issues (Tie Approval)	0d	25-Jan-07 A	
SDS79920	Final RSA	9d	07-Apr-08	18-Apr-08
SDS79930	Incorporate Final RSA Comments	5d	21-Apr-08	25-Apr-08
VO195 Lindsay Road Function Design Forth Ports Concept SUPERSEDED BY VO253		33d	06-Sep-07 A	22-Oct-07 A
SDS73610	Alternative Track Layouts and Iteration with Roads Team superseded by VO253	31d	06-Sep-07 A	22-Oct-07 A
VO253 - Subsection 1A4 - Lindsay Road Detailed Design (Not Approved)		216d	26-Nov-07 A	02-Oct-08
VO253 Subsection 1A4 - Track		10d	14-Jan-08	25-Jan-08
SDS78800	Amend Vertical Alignemnt & Fix Design (Track)	2d	18-Jan-08	21-Jan-08
SDS78810	Amend Horizontal Alignment & Handover to Roads	5d	14-Jan-08	18-Jan-08
SDS78820	Issue Notification of Completion Letter Track Sub Section 1A4	0d		25-Jan-08
VO253 Subsection 1A4 - Roads		216d	26-Nov-07 A	02-Oct-08
SDS78830	Fix Horizontal Alignment & Handover toTrack	22d	26-Nov-07 A	03-Jan-08 A
SDS78840	Design Vertical Alignment & Fix Design	8d	08-Jan-08 A	17-Jan-08
SDS78850	Complete Roads, Street Lighting & Landscaping Design	9d	15-Jan-08	28-Jan-08
SDS78930	Issue Construction Drawings	0d		02-Oct-08
SDS80750	Issue Notification Of Completion Letter- Roads Design to tie for Approval Section 1A4	0d		28-Jan-08
SDS80790	Issue Notification Of Completion Letter- Hard & Soft Landscaping Design to tie Section 1A4	0d		28-Jan-08
SDS80800	Issue Notification Of Completion Letter- Street Lighting Design (Inc. Any OLE Combined Pole Design) to tie Section 1A4	0d		28-Jan-08
VO252 - Subsection 1A3 - Ocean Terminal Detailed Design (Not Approved)		216d	26-Nov-07 A	02-Oct-08
VO252 Subsection 1A3 - Track		10d	14-Jan-08	25-Jan-08
SDS78860	Amend Horizontal Alignment & Handover to Roads	5d	14-Jan-08	18-Jan-08
SDS78870	Amend Vertical Alignemnt & Fix Design (Track)	2d	18-Jan-08	21-Jan-08
SDS78880	Issue Notification of Completion Letter Track Sub Section 1A3	0d		25-Jan-08
VO252 Subsection 1A3 - Roads		216d	26-Nov-07 A	02-Oct-08
SDS78890	Fix Horizontal Alignment & Handover toTrack	30d	26-Nov-07 A	16-Jan-08
SDS78900	Design Vertical Alignment & Fix Design	8d	11-Jan-08 A	23-Jan-08
SDS78910	Complete Roads, Street Lighting & Landscaping Design	20d	18-Jan-08	15-Feb-08
SDS78940	Issue Construction Drawings	0d		02-Oct-08
SDS80760	Issue Notification Of Completion Letter- Roads Design to tie for Approval Section 1A3	0d		15-Feb-08
SDS80770	Issue Notification Of Completion Letter- Hard & Soft Landscaping Design to tie Section 1A3	0d		15-Feb-08
SDS80780	Issue Notification Of Completion Letter- Street Lighting Design (Inc. Any OLE Combined Pole Design) to tie Section 1A3	0d		15-Feb-08
VO254 Casino Car Park Design (Not Approved)		18d	10-Dec-07 A	11-Jan-08 A
SDS78920	Complete Car Park Design	18d	10-Dec-07 A	11-Jan-08 A
VO259 Bernard Street Works (Not Approved)		18d	10-Dec-07 A	11-Jan-08 A
SDS80850	Additional Roads Design	18d	10-Dec-07 A	11-Jan-08 A
VO257 - Casino Square Alignment Revisions (Not Approved)		38d	17-Dec-07 A	15-Feb-08
SDS80810	Additional Roads Design	13d	17-Dec-07 A	11-Jan-08 A
SDS80820	Additional OLE Design	5d	21-Jan-08	25-Jan-08
SDS80830	Additional Track Design	7d	03-Jan-08 A	11-Jan-08 A
SDS80840	Additional Street Lighting Design	19d	21-Jan-08	15-Feb-08
Drainage		254d	12-Mar-07 A	10-Mar-08
SDS70970	Hydraulic Modelling & First Pass Drainage Design	127d	12-Mar-07 A	21-Sep-07 A
SDS70990	Issue Drainage Design Completion Letter to tie for Approval Section 1A	0d		18-Jan-08
SDS71030	Receipt of Drainage Survey Information	0d		25-Feb-08*
SDS71040	Outfall Consent/Approval from SW	0d		25-Feb-08*
SDS71050	Outfall Consent/Approval from CEC	0d		14-Jan-08*
SDS71060	Outfall Consent/Approval from SEPA	0d		10-May-07 A
SDS73170	Detailed Drainage Design and Review of Hydraulic Modelling	23d	20-Aug-07 A	24-Sep-07 A
SDS80650	Final Detailed Drainage Design	37d	16-Nov-07 A	17-Jan-08
SDS80660	Confirm Drainage and amend if required	9d	26-Feb-08	10-Mar-08
Traffic Modelling		23d	23-Jun-06 A	26-Jul-06 A
SDS55950	JRC Receive Junction Layouts	0d		23-Jun-06 A
SDS55960	JRC Prepare VISSIM Initial Traffic Flows (Low Level Model)	12d	26-Jun-06 A	12-Jul-06 A
SDS55970	SDS Produce LINSIG/TRANSYT Assessments (Iteration 1)	9d	13-Jul-06 A	26-Jul-06 A
Boundary & Accomodation Works (Task300.2.4)		223d	26-Mar-07 A	08-Feb-08
SDS41770	Detailed Design of Boundary & Accomodation Works	112d	26-Mar-07 A	13-Sep-07 A
SDS41780	Issue Notification Of Completion Letter- Detailed Design of Boundary & Accomodation Works Section 1A	0d		14-Sep-07 A
SDS41790	Additional Boundary and Accommodation Works and review	56d	09-Nov-07 A	08-Feb-08
Utilities Section 1A (Includes Constitution Street) Plates 1 to 12		373d	13-Mar-06 A	27-Aug-07 A
A11240	Close Out PD Issues & Propose Diversions	41d	29-Aug-06 A	27-Oct-06 A
A11250	Issue PD to SUCs	0d		16-Oct-06 A
A11260	Consult SUCs and MUDFA (at later stage - when appointed)	192d	30-Oct-06 A	27-Aug-07 A
A11270	Access to MUDFA	0d		10-Oct-06 A
UTIL030	Section 1A - Pre-Preliminary Design (Utilities)	42d	13-Mar-06 A	17-May-06 A
UTIL200	Issue to Statutory Utility Companies (SUCs)	0d		17-May-06 A
Utilities Section 1A1 (Excludes Constitution Street) Plates 13 to 15		334d	13-Mar-06 A	02-Jul-07 A
A11280	Close Out PD Issues & Propose Diversions	41d	29-Aug-06 A	27-Oct-06 A
A11290	Issue PD to SUCs	0d		16-Oct-06 A
A11930	Consult SUCs and MUDFA (at later stage - when appointed)	46d	30-Oct-06 A	12-Jan-07 A
A11940	Access to MUDFA	0d		10-Oct-06 A
A12210	Issue to SUCs	0d		12-Jan-07 A
A12230	SUCs Approval	99d	12-Jan-07 A	14-Jun-07 A
A14570	Incorporate Comments and Compile IFC Drawings Section 1A1	8d	14-Jun-07 A	25-Jun-07 A
A14580	Issue First Draft IFC to tie Section 1A1	0d		25-Jun-07 A
A14970	Compile Final Drawings	6d	25-Jun-07 A	02-Jul-07 A
A14980	Issue Construction Drawings	0d		02-Jul-07 A
UTIL120	Section 1A - Pre-Preliminary Design (Utilities)	42d	13-Mar-06 A	17-May-06 A
UTIL210	Issue to Statutory Utility Companies (SUCs)	0d		17-May-06 A
Utilities Section 1A2 (Tower Place to Newhaven) Plates 16 to 21		373d	13-Mar-06 A	27-Aug-07 A
A11990	Consult SUCs and MUDFA (at later stage - when appointed)	8d	15-Aug-07 A	27-Aug-07 A
UTIL220	Section 1A - Pre-Preliminary Design (Utilities)	42d	13-Mar-06 A	17-May-06 A
UTIL230	Issue to Statutory Utility Companies (SUCs)	0d		17-May-06 A

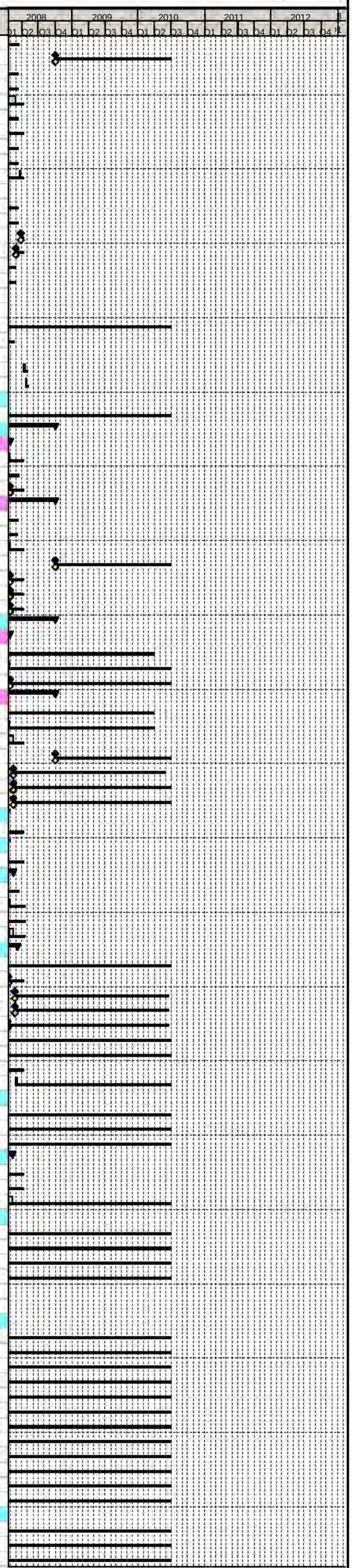

Primary Baseline
Actual Work
Remaining Work
Critical Remaining Work
Baseline Milestone
Milestone

Trams for Edinburgh
connecting our Capital

Edinburgh Tram Project

SDS FULL DESIGN PROGRAMME @ V26

tie

Activity ID	Activity Name	Original Duration	Start	Finish
TRO's		528d	03-Jul-06 A	29-Jul-08
SDS33050	Collate Exisiting TROs	8d	03-Jul-06 A	12-Jul-06 A
SDS33060	Receive Preliminary Roads Design	0d		12-Jul-06 A
SDS81910	Interim TRO Design Section 1A	5d	18-Feb-08	22-Feb-08
SDS81920	Final TRO Design Section 1A	5d	23-Jul-08	29-Jul-08
TTRO's		177d	29-Aug-06 A	11-May-07 A
TTRO200	SDS Produce Affected Roads Listing For MUDFA Works	64d	29-Aug-06 A	30-Nov-06 A
TTRO210	SDS Produce Affected Roads Listing For INFRACO Works	36d	12-Mar-07 A	04-May-07 A
TTRO390	Dundas & Wilson Draft TTRO Schedule For MUDFA Works	6d	01-Dec-06 A	08-Dec-06 A
TTRO420	Dundas & Wilson Draft TTRO Schedule For INFRACO Works	5d	04-May-07 A	11-May-07 A
TTRO470	Issue Affected Roads Listing To Dundas & Wilson For MUDFA Works Section 1A	0d		30-Nov-06 A
TTRO490	Issue Affected Roads Listing To Dundas & Wilson For INFRACO Works Section 1A	0d		04-May-07 A
FOW - COS		986d	19-Sep-05 A	28-Jul-09
CON-0250	Requirements Definition (Contract Dates)	62d	19-Sep-05 A	19-Dec-05 A
Tram Stop Foot of the Walk (Task300.3.10)		799d	07-Jun-06 A	28-Jul-09
A25010	Prepare Tram Stop Planning Submission Drawings for Issue to Planning Drawing Team	88d	31-Aug-07 A	17-Jan-08
A25020	Produce Engineering Detailed Design Drawings	33d	03-Dec-07 A	28-Jan-08
A25200	Issue Notification Of Completion Letter- Foot Of The Walk Tram Stop Design to tie	0d		28-Jan-08*
A25950	Tram Stop Design Complete - Drawings Issued for Construction	0d		23-Apr-08
A27440	Site Visit with tie & CEC To Review Preliminary Design	1d	02-Mar-07 A	02-Mar-07 A
A43980	Prepare Detailed Design Stop Drawings	66d	17-Nov-06 A	02-Mar-07 A
A47280	Produce As Built Drawings	200d	03-Oct-08	28-Jul-09
A47290	Receive Final As Built Data from the Contractor	0d		30-Jun-09
A47300	Receive First As Built Data from the Contractor	0d		01-Oct-08*
A47310	Issue Final As Built Drawings	0d		28-Jul-09
A4780	General Arrangement Drawings	12d	07-Jun-06 A	23-Jun-06 A
A5160	Issue Tram Stop GA Drawings for Foot of the Walk	0d		30-Jun-06 A
Tram Stop Bernard Street (Task300.2.8)		811d	22-May-06 A	28-Jul-09
A24860	Prepare Tram Stop Planning Submission Drawings for issue to Planning Drawing Team	63d	16-Apr-07 A	19-Jul-07 A
A24890	Produce Engineering Detailed Design Drawings	62d	23-Aug-07 A	23-Nov-07 A
A25110	Issue Notification Of Completion Letter- Bernard Street Tram Stop Design to tie	0d		23-Nov-07 A
A25810	Tram Stop Design Complete - Drawings Issued for Construction	0d		23-Apr-08
A25940	Alterations to Tram Stop due to Road alterations (VO259)	14d	14-Dec-07 A	11-Jan-08 A
A27390	Site Visit To Review Preliminary Design	1d	07-Sep-06 A	07-Sep-06 A
A43240	IDC Tram Stop Design for Planning Submission (Inc. Systems Assurance)	22d	02-Apr-07 A	07-May-07 A
A43930	Prepare Detailed Design Stop Drawings	5d	26-Feb-07 A	02-Mar-07 A
A47080	Produce As Built Drawings	200d	03-Oct-08	28-Jul-09
A47090	Receive Final As Built Data from the Contractor	0d		30-Jun-09
A47100	Receive First As Built Data from the Contractor	0d		01-Oct-08*
A47110	Issue Final As Built Drawings	0d		28-Jul-09
A4730	General Arrangement Drawings	23d	22-May-06 A	23-Jun-06 A
A5110	Issue Tram Stop GA Drawings for Constitution Street	0d		30-Jun-06 A
VO42 Bernard Street Tram Stop (Not tie approved)		89d	16-Oct-06 A	26-Feb-07 A
A26600	OLE Re-design	84d	16-Oct-06 A	26-Feb-07 A
A26610	Tramstop Re-design	84d	16-Oct-06 A	26-Feb-07 A
A27650	Systems and Communications Re-design	84d	16-Oct-06 A	26-Feb-07 A
A28270	Track Re-design	84d	16-Oct-06 A	26-Feb-07 A
A28280	Additional Runtime	84d	16-Oct-06 A	26-Feb-07 A
A28290	Roads Re-design	84d	16-Oct-06 A	26-Feb-07 A
A28300	Additional Traffic Modelling	84d	16-Oct-06 A	26-Feb-07 A
COS - OCD		986d	19-Sep-05 A	28-Jul-09
CON-0280	Requirements Definition (Contract Dates)	62d	19-Sep-05 A	19-Dec-05 A
Tram Stop Port of Leith (Task300.2.9)		811d	22-May-06 A	28-Jul-09
A24870	Prepare Tram Stop Planning Submission Drawings for issue to Planning Drawing Team	38d	01-Jun-07 A	27-Jul-07 A
A24900	Produce Engineering Detailed Design Drawings	98d	24-Aug-07 A	25-Jan-08
A25120	Issue Notification Of Completion Letter- Port Of Leith Tram Stop Design to tie	0d		25-Jan-08
A25830	Tram Stop Design Complete - Drawings Issued for Construction	0d		23-Apr-08
A27400	Site Visit with tie & CEC To Review Preliminary Design	1d	26-Feb-07 A	26-Feb-07 A
A43250	IDC Tram Stop Design for Planning Submission (Inc. Systems Assurance)	14d	16-Apr-07 A	04-May-07 A
A43940	Prepare Detailed Design Stop Drawings	66d	17-Nov-06 A	02-Mar-07 A
A47120	Produce As Built Drawings	200d	03-Oct-08	28-Jul-09
A47130	Receive Final As Built Data from the Contractor	0d		30-Jun-09
A47140	Receive First As Built Data from the Contractor	0d		01-Oct-08*
A47150	Issue Final As Built Drawings	0d		28-Jul-09
A4740	General Arrangement Drawings	23d	22-May-06 A	23-Jun-06 A
A5120	Issue Tram Stop GA Drawings for Ocean Drive	0d		30-Jun-06 A
VO40 Port Of Leith Tram Stop (Not tie approved)		25d	16-Oct-06 A	17-Nov-06 A
A26540	OLE Re-design	23d	16-Oct-06 A	17-Nov-06 A
A26550	Tramstop Re-design	23d	16-Oct-06 A	17-Nov-06 A
A26560	Systems and Communications Re-design	23d	16-Oct-06 A	17-Nov-06 A
A26570	Track Re-design	23d	16-Oct-06 A	17-Nov-06 A
A26580	Additional Runtime	23d	16-Oct-06 A	17-Nov-06 A
A26590	Roads Re-design	23d	16-Oct-06 A	17-Nov-06 A
OCD - OCT		986d	19-Sep-05 A	28-Jul-09
CON-0310	Requirements Definition (Contract Dates)	62d	19-Sep-05 A	19-Dec-05 A
Tram Stop Ocean Terminal (Task300.2.10)		805d	30-May-06 A	28-Jul-09
A24880	Prepare Tram Stop Planning Submission Drawings for issue to Planning Drawing Team ON HOLD	132d	20-Aug-07 A	12-Mar-08
A24910	Produce Engineering Detailed Design Drawings	11d	13-Mar-08	28-Mar-08
A24970	Resolution of Forth Ports Issues	0d	15-Jan-08*	
A25140	Issue Notification Of Completion Letter- Ocean Terminal Tram Stop Design to tie	0d		28-Mar-08
A25860	Tram Stop Design Complete - Drawings Issued for Construction	0d		14-May-08
A27410	Site Visit with tie & CEC To Review Preliminary Design	1d	02-Mar-07 A	02-Mar-07 A
A43260	IDC Tram Stop Design for Planning Submission (Inc. Systems Assurance) ON HOLD	14d	16-Apr-07 A	04-May-07 A
A43950	Prepare Detailed Design Stop Drawings	5d	26-Feb-07 A	02-Mar-07 A
A47160	Produce As Built Drawings	200d	03-Oct-08	28-Jul-09
A47170	Receive Final As Built Data the Contractor	0d		30-Jun-09
A47180	Receive First As Built Data from the Contractor	0d		01-Oct-08*
A47190	Issue Final As Built Drawings	0d		28-Jul-09
A4750	General Arrangement Drawings	18d	30-May-06 A	23-Jun-06 A
A5130	Issue Tram Stop GA Drawings for Ocean Terminal	0d		30-Jun-06 A
VO53 Ocean Terminal Stop Revision (Not tie approved)		336d	16-Oct-06 A	15-Feb-08
A28310	OLE Re-design	145d	16-Oct-06 A	04-Jun-07 A
A28320	Tramstop Re-design	23d	15-Jan-08	15-Feb-08
A28330	Systems and Communications Re-design	146d	16-Oct-06 A	04-Jun-07 A
A28340	Revise Track Layout and Alignment	11d	16-Oct-06 A	31-Oct-06 A
A28350	Additional Runtime	129d	16-Oct-06 A	08-May-07 A
A28360	Roads Re-design	299d	16-Oct-06 A	28-Jan-08
Structures		694d	13-Mar-06 A	26-Nov-08
S16 Victoria Dock Entrance Bridge		669d	13-Mar-06 A	22-Oct-08
A7180	Assessment and Superstructure Preliminary Design	24d	09-Jan-08 A	13-Feb-08
A7190	Produce AIP	5d	14-Feb-08	20-Feb-08
A7200	Issue Victoria Dock Entrance Bridge AIP to tie	0d		20-Feb-08
A7210	Issue Victoria Dock Entrance Bridge AIP to CEC	0d		20-Feb-08

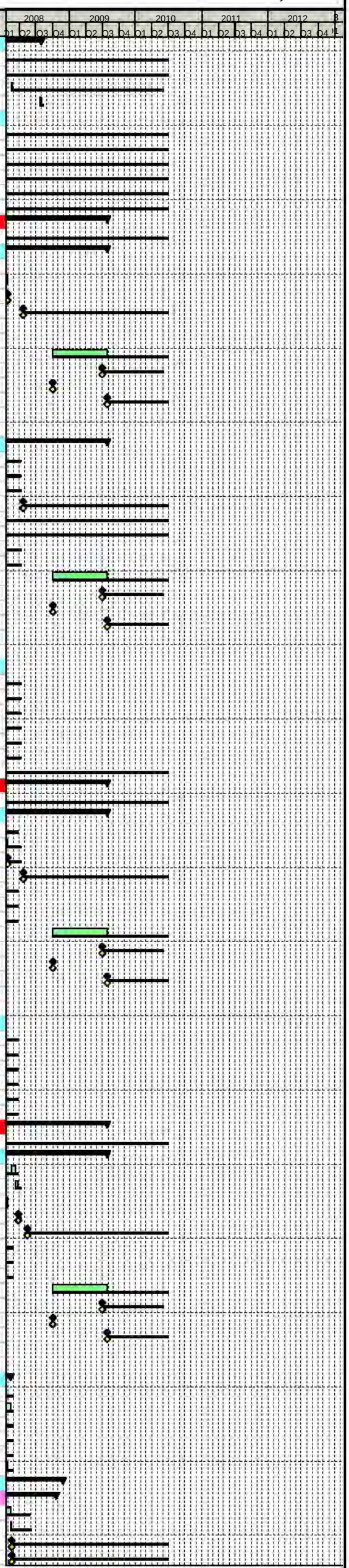

Primary Baseline
Actual Work
Remaining Work
Critical Remaining Work
Baseline Milestone
Milestone

Trams for Edinburgh
...connecting our Capital

Edinburgh Tram Project

SDS FULL DESIGN PROGRAMME @ V26

tie

Activity ID	Activity Name	Original Duration	Start	Finish
A7220	Issue Victoria Dock Entrance Bridge AIP to TAA	0d		20-Feb-08
A7230	TAA Approval Period	38d	21-Feb-08	16-Apr-08
A7380	Receive Approval of Change Request VO252	0d		13-Dec-07 A
A7390	Receive TAA Comments	0d	17-Apr-08	
A7510	Update to Comments	9d	17-Apr-08	30-Apr-08
SDS44880	Review of Previous Work	9d	13-Mar-06 A	24-Mar-06 A
SDS44890	Optioneering	5d	27-Mar-06 A	31-Mar-06 A
SDS44900	Initial Design	8d	03-Apr-06 A	13-Apr-06 A
SDS44910	Production of AIP Drawing	21d	10-Apr-06 A	12-May-06 A
SDS44920	Issue AIP Drawing to tie	0d		12-May-06 A
SDS44930	Checking	4d	15-May-06 A	18-May-06 A
SDS44940	tie AIP Drawing Review Period	4d	15-May-06 A	18-May-06 A
SDS44950	Undertake Consultations	17d	15-May-06 A	08-Jun-06 A
SDS44960	Receive AIP Drawing Comments from tie	0d		18-May-06 A
SDS44970	Incorporate tie Comments into AIP Drawing	5d	22-May-06 A	26-May-06 A
SDS44980	Production of AIP Document	5d	22-May-06 A	26-May-06 A
SDS44990	Issue Victoria Dock AIP Document to tie	0d		30-Jun-06 A
SDS45000	tie AIP Document Review Period	32d	03-Jul-06 A	17-Aug-06 A
SDS45010	Receive AIP Document Comments from tie	0d		23-Oct-06 A
SDS45020	Incorporate tie Comments into AIP Document	7d	23-Oct-06 A	31-Oct-06 A
SDS45030	Issue AIP Document & Drawing to TAA	0d		22-Aug-06 A
SDS45040	TAA AIP Document & Drawing Review Period	2d	23-Aug-06 A	24-Aug-06 A
SDS45050	Issue AIP Document & Drawing to Planning Department	0d		11-Jul-06 A
SDS45060	Planning Department AIP Document & Drawing Review Period	32d	11-Jul-06 A	28-Aug-06 A
SDS45070	Recieve AIP Document & Drawing Comments from TAA	0d		24-Aug-06 A
SDS45080	Incorporate TAA Comments into AIP Document & Drawing	1d	25-Aug-06 A	28-Aug-06 A
Victoria Dock Preliminary Design Milestones		433d	14-Aug-06 A	30-Apr-08
A5610	Receipt of tie PD Acceptance	0d		30-Apr-08
A5620	Receipt of Roads Alignment	0d		09-Jan-08 A
A5700	Receipt of OLE Prelim Design Package	0d		14-Aug-06 A
A5940	Receipt of Revised OLE Design Package	0d		22-Jan-08
A6960	Receipt of Ground Investigation Data and Interpretative Geotechnical Data	0d		14-Aug-06 A
A6970	Receipt of Approved and Signed AIP Document	0d		22-Dec-06 A
A7040	Receipt of Ground Investigation Data and Interpretative Geotechnical Data	0d		12-Mar-08
A8150	Receipt of Revised Approved and Signed AIP Document	0d		30-Apr-08
Victoria Dock Superstructure Detailed Design		538d	01-Aug-06 A	13-Aug-08
A6980	Assessment and Superstructure Detailed Design ABANDONED DUE TO VARIATION	289d	01-Aug-06 A	22-Oct-07 A
A6990	Superstructure Detailed Design Draughting	38d	10-Apr-08	04-Jun-08
A7000	Issue Superstructure Detailed Design Package to CAT II Checker	0d		04-Jun-08
A7010	Superstructure CAT II Check	28d	05-Jun-08	16-Jul-08
A7020	Receive and Incoporate CAT II Comments	9d	17-Jul-08	30-Jul-08
A7030	Issue Notification Of Completion Letter- Victoria Dock Superstructure Design Package to tie	0d		13-Aug-08
A7060	Assessment and Superstructure Detailed Design	38d	21-Feb-08	16-Apr-08
SDS19160	Detailed Design Resources	496d	01-Aug-06 A	13-Aug-08
SDS61860	IDC	9d	31-Jul-08	13-Aug-08
Victoria Dock Substructure Detailed Design		110d	13-Mar-08	13-Aug-08
A7120	Substructure Detailed Design	28d	13-Mar-08	23-Apr-08
A7130	Substructure Detailed Design Draughting	28d	27-Mar-08	07-May-08
A7140	Issue Substructure Detailed Design Package to CAT II Checker	0d		07-May-08
A7150	Substructure CAT II Check	28d	08-May-08	18-Jun-08
A7160	Receive and Incorporate CAT II Comments	9d	19-Jun-08	02-Jul-08
A7170	Issue Notification Of Completion Letter- Victoria Dock Substructure Detailed Design Package to tie	0d		13-Aug-08
Issue Victoria Dock Design Package for Construction / Fabrication		0d	22-Oct-08	22-Oct-08
SDS62420	Issue Victoria Dock Design Package for Construction / Fabrication	0d		22-Oct-08
S17 Tower Place Bridge		694d	13-Mar-06 A	26-Nov-08
A7240	Assessment and Superstructure Preliminary Design	24d	09-Jan-08 A	13-Feb-08
A7250	Produce AIP	5d	14-Feb-08	20-Feb-08
A7370	Receive Approval of Change Request VO252	0d		13-Dec-07 A
A7520	Issue Victoria Dock Entrance Bridge AIP to tie	0d		20-Feb-08
A7530	Issue Victoria Dock Entrance Bridge AIP to CEC	0d		20-Feb-08
A7540	Issue Victoria Dock Entrance Bridge AIP to TAA	0d		20-Feb-08
A7550	TAA Approval Period	38d	21-Feb-08	16-Apr-08
A7560	Receive TAA Comments	0d	17-Apr-08	
A7570	Update to Comments	9d	17-Apr-08	30-Apr-08
SDS45120	Review of Previous Work	9d	13-Mar-06 A	24-Mar-06 A
SDS45130	Optioneering	5d	27-Mar-06 A	31-Mar-06 A
SDS45140	Initial Design	8d	03-Apr-06 A	13-Apr-06 A
SDS45150	Production of AIP Drawing	18d	10-Apr-06 A	09-May-06 A
SDS45160	Issue AIP Drawing to tie	0d		19-May-06 A
SDS45170	Checking	4d	10-May-06 A	15-May-06 A
SDS45180	tie AIP Drawing Review Period	4d	10-May-06 A	15-May-06 A
SDS45190	Undertake Consultations	17d	10-May-06 A	05-Jun-06 A
SDS45200	Receive AIP Drawing Comments from tie	0d		15-May-06 A
SDS45210	Incorporate tie Comments into AIP Drawing	5d	22-May-06 A	26-May-06 A
SDS45220	Production of AIP Document	5d	06-Jun-06 A	12-Jun-06 A
SDS45230	Issue Tower Place Bridge AIP Document to tie	0d		30-Jun-06 A
SDS45240	tie AIP Document Review Period	23d	14-Aug-06 A	18-Sep-06 A
SDS45250	Receive AIP Document Comments from tie	0d		23-Oct-06 A
SDS45260	Incorporate tie Comments into AIP Document	4d	23-Oct-06 A	26-Oct-06 A
SDS45270	Issue AIP Document & Drawing to TAA	0d		18-Sep-06 A
SDS45280	TAA AIP Document & Drawing Review Period	5d	21-Aug-06 A	28-Aug-06 A
SDS45290	Issue AIP Document & Drawing to Planning Department	0d		11-Jul-06 A
SDS45300	Planning Department AIP Document & Drawing Review Period	32d	11-Jul-06 A	28-Aug-06 A
SDS45310	Recieve AIP Document & Drawing Comments from TAA	0d		26-Oct-06 A
SDS45320	Incorporate TAA Comments into AIP Document & Drawing	5d	27-Oct-06 A	02-Nov-06 A
SDS45330	Recieve AIP Document & Drawing Comments from Planning Department	0d		11-Dec-06 A
SDS45340	Incorporate Planning Department TAA Comments into AIP Document & Drawing	6d	11-Dec-06 A	18-Dec-06 A
SDS45350	Issue AIP Drawing & Document to Structures Detailed Design Team	0d		18-Dec-06 A
Tower Place Bridge Preliminary Design Milestones		433d	14-Aug-06 A	30-Apr-08
A7260	Receipt of tie PD Acceptance	0d		30-Apr-08
A7270	Receipt of Roads Alignment	0d		09-Jan-08 A
A7280	Receipt of OLE Prelim Design Package	0d		12-Feb-07 A
A7290	Receipt of Ground Investigation Data and Interpretative Geotechnical Data	0d		14-Aug-06 A
A7300	Receipt of Approved and Signed AIP Document	0d		22-Dec-06 A
A8160	Receipt of Ground Investigation Data and Interpretative Geotechnical Data	0d		12-Mar-08
A8280	Receipt of Revised OLE Design Package	0d		22-Jan-08
A8290	Receipt of Approved and Signed AIP Document	0d		30-Apr-08
Tower Place Bridge Superstructure Detailed Design		548d	01-Aug-06 A	17-Sep-08
A7310	Assessment and Superstructure Detailed Design	52d	01-May-08	16-Jul-08
A7320	Superstructure Detailed Design Draughting	38d	15-May-08	09-Jul-08
A7330	Issue Superstructure Detailed Design Package to CAT II Checker	0d		09-Jul-08
A7340	Superstructure CAT II Check	28d	10-Jul-08	20-Aug-08
A7350	Receive and Incoporate CAT II Comments	9d	21-Aug-08	03-Sep-08

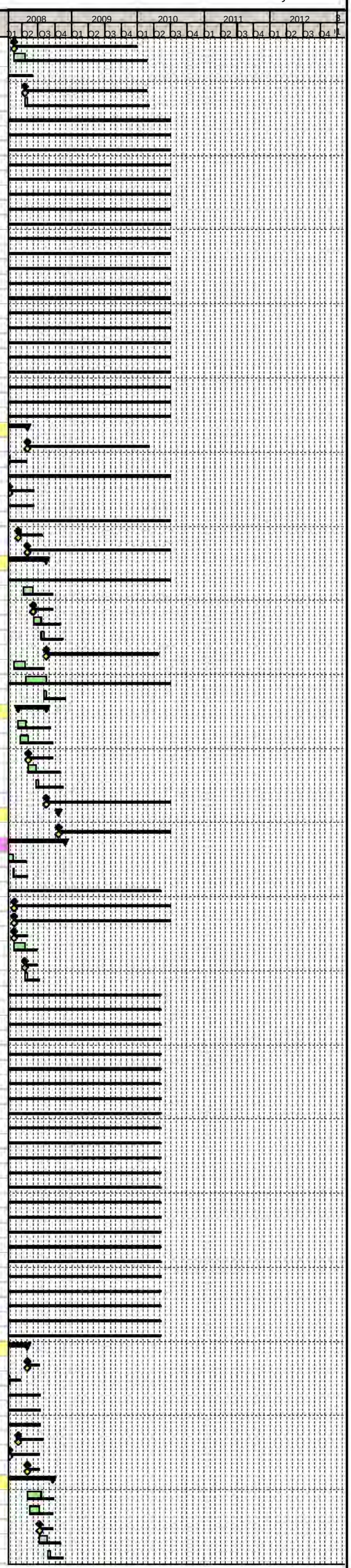

Primary Baseline
Actual Work
Remaining Work
Critical Remaining Work
Baseline Milestone
Milestone

Trams for Edinburgh
...connecting our Capital

Edinburgh Tram Project

SDS FULL DESIGN PROGRAMME @ V26

tie

Activity ID	Activity Name	Original Duration	Start	Finish
A7360	Issue Notification Of Completion Letter- Tower Place Bridge Superstructure Design Package to tie	0d		17-Sep-08
SDS39550	Detailed Design Resources	505d	01-Aug-06 A	17-Sep-08
SDS61880	IDC	9d	04-Sep-08	17-Sep-08
Tower Place Bridge Substructure Detailed Design		100d	01-May-08	17-Sep-08
A7450	Substructure Detailed Design	28d	01-May-08	11-Jun-08
A7460	Substructure Detailed Design Draughting	28d	15-May-08	25-Jun-08
A7470	Issue Substructure Detailed Design Package to CAT II Checker	0d		25-Jun-08
A7480	Substructure CAT II Check	28d	26-Jun-08	06-Aug-08
A7490	Receive and Incorporate CAT II Comments	9d	07-Aug-08	20-Aug-08
A7500	Issue Notification Of Completion Letter- Tower Place Bridge Substructure Detailed Design Package to tie	0d		17-Sep-08
Issue Tower Place Bridge Design Package For Construction / Fabrication		0d	26-Nov-08	26-Nov-08
SDS62430	Issue Tower Place Bridge Design Package For Construction / Fabrication	0d		26-Nov-08
OCT - NER		986d	19-Sep-05 A	28-Jul-09
CON-0340	Requirements Definition (Contract Dates)	62d	19-Sep-05 A	19-Dec-05 A
Tram Stop Newhaven (Task300.2.11)		811d	22-May-06 A	28-Jul-09
A24920	Prepare Tram Stop Planning Submission Drawings For Issue to the Planning Drawing Team	97d	20-Aug-07 A	18-Jan-08
A24930	Produce Engineering Detailed Design Drawings	9d	21-Jan-08	01-Feb-08
A24960	Resolution of Forth Ports Issues	0d	15-Jan-08*	
A25160	Issue Notification Of Completion Letter- Newhaven Tram Stop Design to tie	0d		01-Feb-08
A25890	Tram Stop Design Complete - Drawings Issued for Construction	0d		14-Aug-08
A27420	Site Visit with tie & CEC To Review Preliminary Design	1d	02-Mar-07 A	02-Mar-07 A
A43270	IDC Tram Stop Design for Planning Submission (Inc. Systems Assurance) ON HOLD	14d	16-Apr-07 A	04-May-07 A
A43960	Prepare Detailed Design Stop Drawings	106d	19-Sep-06 A	02-Mar-07 A
A47200	Produce As Built Drawings	200d	03-Oct-08	28-Jul-09
A47210	Receive Final As Built Data from the Contractor	0d		30-Jun-09
A47220	Receive First As Built Data from the Contractor	0d		01-Oct-08*
A47230	Issue Final As Built Drawings	0d		28-Jul-09
A4760	General Arrangement Drawings	23d	22-May-06 A	23-Jun-06 A
A5140	Issue Tram Stop GA Drawings for Newhaven Road	0d		30-Jun-06 A
VO55 Newhaven Tram Stop Layout (Not tie approved)		78d	16-Oct-06 A	09-Feb-07 A
A28370	OLE Re-design	74d	16-Oct-06 A	09-Feb-07 A
A28380	Tramstop Re-design	74d	16-Oct-06 A	09-Feb-07 A
A28390	Systems and Communications Re-design	74d	16-Oct-06 A	09-Feb-07 A
A28400	Revise Track Layout and Alignment	74d	16-Oct-06 A	09-Feb-07 A
A28410	Additional Runtime	74d	16-Oct-06 A	09-Feb-07 A
A28420	Roads Re-design	74d	16-Oct-06 A	09-Feb-07 A
A28430	Utilities	74d	16-Oct-06 A	09-Feb-07 A
Structures		663d	27-Feb-06 A	30-Sep-08
W01 Lindsay Road Retaining Wall		663d	27-Feb-06 A	30-Sep-08
A7580	Assessment and Superstructure Preliminary Design	14d	18-Jan-08	07-Feb-08
A7700	Receive Information from Forth Ports (VO253)	0d	15-Jan-08*	
A7710	Produce AIP	5d	08-Feb-08	14-Feb-08
A7720	Issue Lindsay Road Retaininng Wall AIP to tie	0d		14-Feb-08
A7910	Issue Lindsay Road Retaininng Wall AIP to CEC	0d		14-Feb-08
A7920	Issue Lindsay Road Retaininng Wall AIP to TAA	0d		14-Feb-08
A7930	TAA Approval Period	38d	15-Feb-08	10-Apr-08
A8010	Receive TAA Comments	0d	11-Apr-08	
A8140	Update to Comments	9d	11-Apr-08	24-Apr-08
SDS50400	Review of Previous Work	9d	27-Feb-06 A	10-Mar-06 A
SDS50410	Optioneering	4d	10-Apr-06 A	13-Apr-06 A
SDS50420	Initial Design	8d	24-Apr-06 A	05-May-06 A
SDS50430	Production of AIP Drawing	41d	28-Apr-06 A	28-Apr-06 A
SDS50440	Issue Lindsay Rd RW AIP Drawing to tie	0d		30-Jun-06 A
SDS50450	Checking	4d	14-Aug-06 A	17-Aug-06 A
SDS50460	tie AIP Drawing Review Period	4d	14-Aug-06 A	17-Aug-06 A
SDS50470	Undertake Consultations	36d	08-May-06 A	29-Jun-06 A
SDS50480	Receive AIP Drawing Comments from tie	0d		17-Aug-06 A
SDS50490	Incorporate tie Comments into AIP Drawing	5d	14-Aug-06 A	18-Aug-06 A
SDS50500	Production of AIP Document	4d	14-Aug-06 A	17-Aug-06 A
SDS50510	Issue Lindsay Rd RW AIP Document to tie	0d		17-Aug-06 A
SDS50520	tie AIP Document Review Period	4d	14-Aug-06 A	17-Aug-06 A
SDS50530	Receive AIP Document Comments from tie	0d		17-Aug-06 A
SDS50540	Incorporate tie Comments into AIP Document	4d	14-Aug-06 A	17-Aug-06 A
SDS50550	Issue AIP Document & Drawing to TAA	0d		18-Aug-06 A
SDS50560	Issue AIP Document & Drawing to Planning Department	0d		11-Jul-06 A
SDS50570	TAA AIP Document & Drawing Review Period	5d	21-Aug-06 A	28-Aug-06 A
SDS50580	Planning Department AIP Document & Drawing Review Period	32d	11-Jul-06 A	28-Aug-06 A
SDS50590	Recieve AIP Document & Drawing Comments from TAA	0d		23-Oct-06 A
SDS50600	Recieve AIP Document & Drawing Comments from Planning Department	0d		23-Oct-06 A
SDS50610	Incorporate TAA Comments into AIP Document & Drawing	42d	23-Oct-06 A	22-Dec-06 A
SDS50620	Incorporate Planning Department TAA Comments into AIP Document & Drawing	6d	23-Oct-06 A	30-Oct-06 A
SDS50630	Issue AIP Drawing & Document to Structures Detailed Design Team	0d		24-Apr-08
SDS50750	Condition Survey	19d	13-Mar-06 A	07-Apr-06 A
Lindsay Road Retaining Wall Preliminary Design Milestones		432d	09-Aug-06 A	24-Apr-08
A7590	Receipt of tie PD Acceptance	0d		09-Aug-06 A
A7600	Receipt of Roads Alignment	0d		17-Jan-08
A7610	Receipt of OLE Prelim Design Package	0d		31-Jan-08
A7620	Receipt of Ground Investigation Data and Interpretative Geotechnical Data	0d		11-Feb-08
A7630	Receipt of Approved and Signed AIP Document	0d		24-Apr-08
Lindsay Road Retaining Wall Structure Detailed Design		116d	15-Feb-08	25-Jul-08
A47970	Detailed Design Resourcing	59d	28-Apr-08	25-Jul-08
A7640	Structure Detailed Design	28d	15-Feb-08	27-Mar-08
A7650	Structure Detailed Design Draughting	28d	28-Mar-08	08-May-08
A7660	Issue Structure Detailed Design Package to CAT I Checker	0d		08-May-08
A7670	Structure CAT I Check	28d	09-May-08	19-Jun-08
A7680	Receive and Incoporate CAT I Comments	9d	20-Jun-08	03-Jul-08
A7690	Issue Notification Of Completion Letter- Lindsay Road Structure Design Package to tie	0d		17-Jul-08
SDS61900	IDC	9d	04-Jul-08	17-Jul-08
Lindsay Road Retaining Wall Issue Structure Design Package for Construction / Fabrication		0d	30-Sep-08	30-Sep-08
A7810	Issue Lindsay Road Retaining Wall Structure Design Package For Construction / Fabrication	0d		30-Sep-08
Tram North Leith Sands Substation (Task300.2.12)		406d	09-May-06 A	07-Dec-07 A
A548940	Preliminary Design of Substation	15d	09-May-06 A	30-May-06 A
A549060	Detailed Design Civils	23d	12-Jan-07 A	16-Feb-07 A
A549070	Detailed Architecture Design	107d	08-Sep-06 A	22-Feb-07 A
A549080	IDC on Detailed Design (Inc. Systems Assurance)	9d	05-Feb-07 A	16-Feb-07 A
A549090	Issue Tram North Leith Sands Substation Planning Submission To tie For Approval	0d		22-Feb-07 A
A549100	tie Approval Period For Planning Submission	19d	23-Feb-07 A	22-Mar-07 A
A549110	Receive tie Comments	0d		16-Mar-07 A
A549120	Update Substation Planning Submission To Incorporate tie Comments	9d	16-Mar-07 A	29-Mar-07 A
A549620	Compile Substation Planning Submission	9d	09-Feb-07 A	22-Feb-07 A
A550020	Substation Consultation Period	9d	19-Jun-06 A	30-Jun-06 A
A550140	Issue of Leith Sands Substation Design	0d		30-Jun-06 A
SDS68600	Compile Detailed Engineering Drawings Submission	23d	27-Apr-07 A	01-Jun-07 A

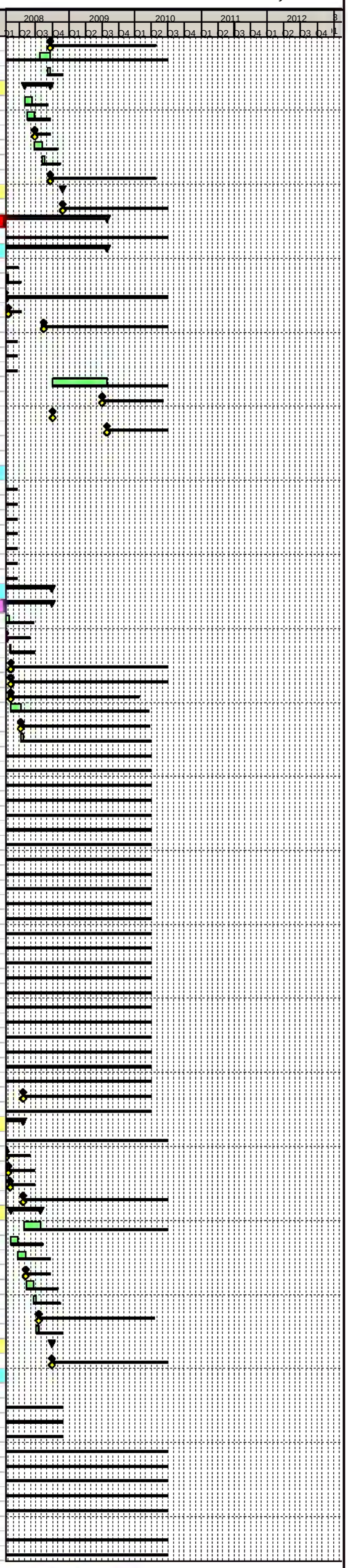

Primary Baseline
Actual Work
Remaining Work
Critical Remaining Work
Baseline Milestone
Milestone

Trams for Edinburgh ..connecting our Capital

Edinburgh Tram Project

SDS FULL DESIGN PROGRAMME @ V26

tie

Activity ID	Activity Name	Original Duration	Start	Finish
SDS81030	Address tie Comments, Other Revisions, IDC & Section Submission Package	24d	02-Nov-07 A	07-Dec-07 A
VO54 North Leith Sands Substation Relocation (Not tie approved)		137d	17-Oct-06 A	04-May-07 A
SDS73110	Substation Revision	128d	17-Oct-06 A	04-May-07 A
SDS73120	Review Feeding/Sectioning Arrangement & Interface with OLE Feed Location	68d	17-Oct-06 A	02-Feb-07 A
SDS73130	Roads Check	68d	17-Oct-06 A	02-Feb-07 A
SDS73140	Traction Power Check	68d	17-Oct-06 A	02-Feb-07 A
SDS73150	Utilities	68d	17-Oct-06 A	02-Feb-07 A
MDR - FOW - Section 1B (Task300.3)		986d	19-Sep-05 A	28-Jul-09
Sub Section Wide		565d	06-Mar-06 A	22-May-08
Sub Section Wide IDC		39d	03-Dec-07 A	04-Feb-08
A40181	Subsection Wide IDC - Roads, Track, Stops, B&A, Street Lighting, Utilities	38d	03-Dec-07 A	04-Feb-08
Design Assurance Review		10d	05-Feb-08	18-Feb-08
SDS67920	Produce Design Assurance Statement	9d	05-Feb-08	18-Feb-08
Consents & Approvals		320d	14-Feb-07 A	15-May-08
Prior Approvals		176d	16-Aug-07 A	28-Apr-08
Combined Section Prior Approval		60d	04-Feb-08	28-Apr-08
A25150	Issue Combined Package 1B for Prior Approval to CEC	0d		04-Feb-08
A25170	Receive Combined Package 1B Comments From CEC	0d		31-Mar-08
A25190	Prior Approval Granted for Section 1B Combined Package	0d		28-Apr-08
A40120	CEC Approval Period - 1B Combined Package	38d	05-Feb-08	31-Mar-08
A40150	Update 1B Combined Package to CEC Comments	19d	01-Apr-08	28-Apr-08
Batch 1/09		97d	19-Oct-07 A	14-Mar-08
SDS78080	Batch 1/09 Formal Approval Period	38d	18-Jan-08	13-Mar-08
SDS78090	Issue Batch 1/09 For Approval to CEC	0d	18-Jan-08	
SDS78100	Receive CEC Prior Approval For Batch 1/09	0d	14-Mar-08	
SDS78130	Batch 1/09 Balfour Street Tramstop - Collation of Planning Drawings	54d	19-Oct-07 A	17-Jan-08
Batch 1/10 Tram Leith Walk 163 Substation		99d	16-Aug-07 A	10-Jan-08 A
A27860	Issue Tram Leith Walk 163 Substation Design for Prior Approval	0d		14-Nov-07 A
A27870	Prior Approval For Tram Leith Walk 163 Substation	0d		10-Jan-08 A
A41100	Informal Consultation With CEC & tie over Prior Approval For Tram Leith Walk 163 Substation	60d	16-Aug-07 A	14-Nov-07 A
A41110	Tram Leith Walk 163 Substation CEC Approval Period	33d	14-Nov-07 A	09-Jan-08 A
Roads, Track, OLE, Landscaping, Street Lighting		93d	27-Aug-07 A	14-Jan-08
SDS25190	Informal Consultation With CEC & tie Over Prior Approval for Roads, Track, OLE, Landscaping and Street Lighting	88d	27-Aug-07 A	14-Jan-08
Tram Stop Balfour Street		55d	27-Aug-07 A	12-Nov-07 A
A40200	Informal Consultation With CEC & tie over Prior Approval Tram Stop Balfour Street	52d	27-Aug-07 A	12-Nov-07 A
Technical Approvals		320d	14-Feb-07 A	15-May-08
Leith Walk Rail Bridge Assessment Review Period (TAA)		78d	14-Feb-07 A	01-Jun-07 A
A7940	Issue Leith Walk Rail Bridge Assessment Report to TAA	0d		04-Apr-07 A
A7950	TAA Leith Walk Rail Bridge Assessment Report Review Period	24d	05-Apr-07 A	15-May-07 A
A7960	Receive Leith Walk Rail Bridge Assessment Report Comments from TAA	0d		15-May-07 A
A7970	Incorporate TAA Comments into Leith Walk Rail Bridge Assessment Report	11d	16-May-07 A	01-Jun-07 A
A8350	Commence Leith Walk Rail Bridge Informal Consultation With CEC Over Technical Approval	34d	14-Feb-07 A	04-Apr-07 A
Leith Walk Rail Bridge Assessment Review Period (Network Rail)		80d	01-Jun-07 A	20-Sep-07 A
A7980	Issue Design and Check Certificate to Network Rail For Comment	0d		01-Jun-07 A
A7990	Network Rail Comment Period	19d	01-Jun-07 A	28-Jun-07 A
A8000	NR COMMENTS NOT RECEIVED	0d		20-Sep-07 A
Roads inc Drainage Technical Approval		122d	19-Nov-07 A	15-May-08
SDS25200	Issue Roads Design to Roads Authority for Approval	0d		18-Feb-08
SDS25210	Roads Authority Approval Period	38d	19-Feb-08	16-Apr-08
SDS25220	Receive Roads Authority Comments	0d		16-Apr-08
SDS25230	Update to Roads Authority Comments	19d	17-Apr-08	15-May-08
SDS25240	Roads Authority Informal Consultation	56d	19-Nov-07 A	18-Feb-08
SDS25310	Roads Technical Approval Granted	0d		15-May-08
VO26 Charette Changes Leith Walk CNB014		284d	14-Aug-06 A	24-Sep-07 A
A7050	Interim OLE Design Update Prior to Final Submission	38d	30-Jul-07 A	24-Sep-07 A
Optioneering		21d	14-Aug-06 A	12-Sep-06 A
A1900	Receive Notice to Proceed from Client	0d	12-Sep-06 A	
A1910	Exploratory Assessment	4d	14-Aug-06 A	17-Aug-06 A
A1920	2-Hour Meeting With CEC	0d	12-Sep-06 A	
Feasibility (2 Designs)		36d	14-Aug-06 A	03-Oct-06 A
A4340	Roads Feasibility Assessment	19d	29-Aug-06 A	25-Sep-06 A
A4380	2-Hour Meeting With CEC - Update	0d	26-Sep-06 A	
A4390	Feasibility Statement Assessment (Not Full Report)	5d	26-Sep-06 A	02-Oct-06 A
A5840	Feasibility Drawings (With Statement Assessment)	5d	26-Sep-06 A	02-Oct-06 A
A5850	With CEC For Approval	0d	03-Oct-06 A	
A6780	Track Feasibility Assessment	12d	14-Aug-06 A	31-Aug-06 A
Preliminary Design (1 Design)		193d	04-Sep-06 A	08-Jun-07 A
A15120	Management Support	60d	04-Sep-06 A	30-Nov-06 A
A5860	Preliminary Road Design	32d	03-Oct-06 A	17-Nov-06 A
A5870	Preliminary Junction Design	24d	13-Oct-06 A	20-Nov-06 A
A5880	Integration With Traffic Modelling	5d	20-Nov-06 A	24-Nov-06 A
A5890	2-Hour Meeting With CEC - Update (Not Required)	0d	17-Nov-06 A	
A5900	Roads Technical Design Statement (Not Required)	21d	19-Oct-06 A	17-Nov-06 A
A5910	TRO Schedules & Plans (Not Required)	2d	16-Nov-06 A	17-Nov-06 A
A5920	Utilities Design Update	2d	16-Nov-06 A	17-Nov-06 A
A5930	TTROs report and Plans (Not Required)	2d	16-Nov-06 A	17-Nov-06 A
A5970	4-hour Meeting With CEC for Approval	0d	06-Dec-06 A	
A6790	Preliminary Track Design	5d	16-Oct-06 A	20-Oct-06 A
A6900	Integration With OLE Design	5d	04-Jun-07 A	08-Jun-07 A
A7800	Stops Design	9d	23-Oct-06 A	03-Nov-06 A
A7840	Environmental	5d	02-Oct-06 A	06-Oct-06 A
A9130	Urban Design	5d	16-Oct-06 A	20-Oct-06 A
VO27 Charette Changes Foot of Walk CNB015		213d	07-Aug-06 A	08-Jun-07 A
Optioneering		30d	14-Aug-06 A	25-Sep-06 A
A6580	Receive Notice to Proceed from Client	0d	25-Sep-06 A	
A6590	Exploratory Assessment	4d	14-Aug-06 A	17-Aug-06 A
A6600	2-Hour Meeting With CEC	0d	25-Sep-06 A	
Feasibility (2 Designs)		41d	07-Aug-06 A	03-Oct-06 A
A6610	Roads Feasibility Assessment	9d	12-Sep-06 A	25-Sep-06 A
A6620	2-Hour Meeting With CEC - Update	0d	26-Sep-06 A	
A6630	Feasibility Statement Assessment (Not Full Report)	5d	26-Sep-06 A	02-Oct-06 A
A6640	Feasibility Drawings (With Statement Assessment)	5d	26-Sep-06 A	02-Oct-06 A
A6650	With CEC For Approval	0d	03-Oct-06 A	
A6800	Track Feasibility Assessment	20d	07-Aug-06 A	05-Sep-06 A
Preliminary Design (1 Design)		193d	04-Sep-06 A	08-Jun-07 A
A6660	Preliminary Road Design	8d	23-Oct-06 A	01-Nov-06 A
A6670	Preliminary Junction Design	7d	02-Nov-06 A	10-Nov-06 A
A6680	Integration With Traffic Modelling	4d	13-Nov-06 A	17-Nov-06 A
A6690	2-Hour Meeting With CEC - Update (Not Required)	0d	17-Nov-06 A	
A6700	Roads Technical Design Statement (Not Required)	5d	13-Nov-06 A	17-Nov-06 A
A6710	TRO Schedules & Plans (Not Required)	2d	16-Nov-06 A	17-Nov-06 A
A6720	Utilities Design Update	2d	16-Nov-06 A	17-Nov-06 A
A6730	TTROs report and plans (Not Required)	2d	16-Nov-06 A	17-Nov-06 A

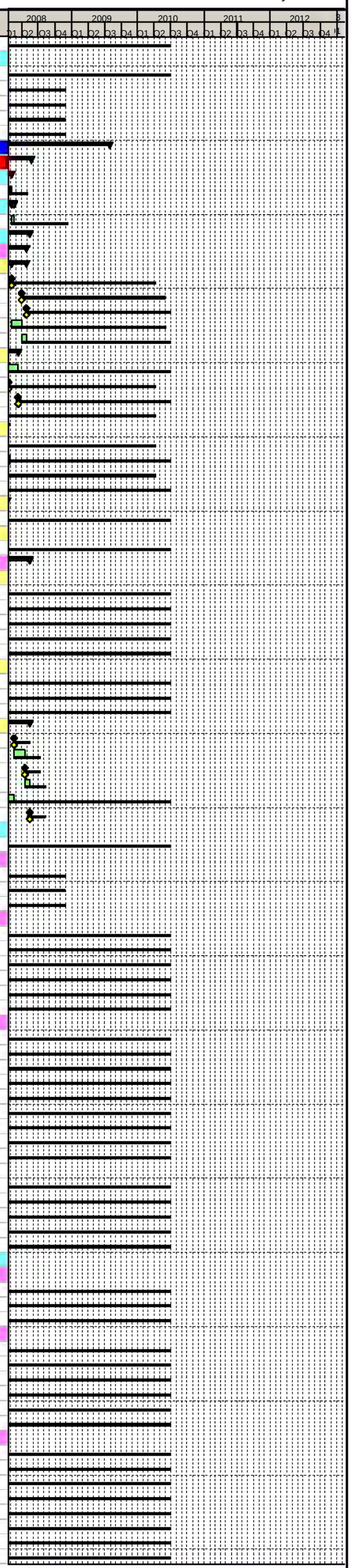

Primary Baseline
Actual Work
Remaining Work
Critical Remaining Work
Baseline Milestone
Milestone

Trams for Edinburgh ..connecting our Capital

Edinburgh Tram Project

SDS FULL DESIGN PROGRAMME @ V26

tie

Activity ID	Activity Name	Original Duration	Start	Finish
A6810	Preliminary Track Design	5d	16-Oct-06 A	20-Oct-06 A
A6880	Stops Design	9d	16-Oct-06 A	27-Oct-06 A
A6910	Integration With OLE Design	5d	04-Jun-07 A	08-Jun-07 A
A7770	Environmental	5d	16-Oct-06 A	20-Oct-06 A
A7780	Urban Design	5d	16-Oct-06 A	20-Oct-06 A
A7790	Management Support	60d	04-Sep-06 A	30-Nov-06 A
Track (Task300.3.1)		486d	13-Mar-06 A	08-Feb-08
A2360	First Pass Mx Horizontal and Vertical Alignment	47d	13-Mar-06 A	24-May-06 A
A2370	Handover Alignment Design P Way to Roads	0d		25-May-06 A
A2380	Coordination Meeting/Workshop Between PWay/Roads & Resolution of Major Conflicts	1d	25-May-06 A	25-May-06 A
SDS24910	Revise Alignment to Match Roads First Pass Vertical	5d	06-Aug-07 A	10-Aug-07 A
SDS24960	Handover Alignment Design Track to Roads	0d		10-Aug-07 A
SDS25330	Revise Alignment to Inc. Preliminary Design Comments	5d	04-Dec-06 A	11-Dec-06 A
SDS25350	Handover Alignment Design Track to Roads	0d		11-Dec-06 A
SDS57020	Issue Notification Of Completion Letter- Track Alignment Design to tie Section 1B	0d		31-Aug-07 A
SDS67780	Advanced Work on Detailed Design Alignment	5d	04-Sep-06 A	08-Sep-06 A
SDS69820	Revise Alignment to Inc. Preliminary Design Comments	105d	09-Feb-07 A	20-Jul-07 A
SDS69830	Handover Alignment Design Track to Roads	0d		20-Jul-07 A
SDS69880	Final Alignment to Match Roads & Check	3d	23-Aug-07 A	28-Aug-07 A
SDS79300	Address tie Comments, Other Revisions, IDC & Section Submission Package	103d	31-Aug-07 A	08-Feb-08
Roads, Street Lighting & Landscaping (Task300.3.2)		559d	07-Mar-06 A	15-May-08
A2390	Route Appreciation/Junct Layout & Determine with tie & CEC Works Extent	4d	10-May-06 A	15-May-06 A
A2400	Frontage Surveys	30d	07-Mar-06 A	21-Apr-06 A
A2410	Set Up Mx Models	4d	09-May-06 A	12-May-06 A
A2420	Produce Preliminary Horizontal Road Alignment Design (Inc Lanes & Parking Zones)	8d	16-May-06 A	25-May-06 A
A2430	Preliminary Rd Junction Configuration Design	4d	26-May-06 A	01-Jun-06 A
A2440	Preliminary Road Safety Audit	2d	29-Jun-06 A	30-Jun-06 A
A2450	Review & Amend TRO Drawings & Schedules for Modifications Required Post Prelim Design	3d	12-Jun-06 A	14-Jun-06 A
A2460	Handover Alignment Design Roads to Pway	0d		30-Jun-06 A
A2470	Coordination Meeting/Workshop Between Roads & Pway Teams	1d	30-Jun-06 A	30-Jun-06 A
A5460	Undertake Road Marking, Pedestrian Req & Traffic Signalling Design	4d	26-May-06 A	01-Jun-06 A
SDS24920	Produce First Pass Vertical Alignment	8d	14-Aug-07 A	23-Aug-07 A
SDS24940	Handover Alignment Design Roads to Pway	0d		24-Aug-07 A
SDS24970	Revise Vertical Alignment to Match Final Track Alignment	12d	28-Aug-07 A	13-Sep-07 A
SDS24980	Horizontal & Vertical Alignment Design Complete	0d		13-Sep-07 A
SDS24990	Issue Notification Of Completion Letter- Roads Design to tie for Approval Section 1B	0d		05-Nov-07 A
SDS25000	Cross Check all Horizontal Design Aspects With Vertical Alignment	2d	01-Oct-07 A	02-Oct-07 A
SDS25040	Issue Construction Drawings	0d		15-May-08
SDS25050	Road Safety Audit Stage 2 (Intermediate)	9d	03-Oct-07 A	16-Oct-07 A
SDS25060	Insert Intermediate RSA Comments	4d	17-Oct-07 A	22-Oct-07 A
SDS25070	Produce Site Clearance Drawings & Schedule	53d	02-Aug-07 A	22-Oct-07 A
SDS25080	Produce Fencing, Barriers & Guardrails Design	34d	03-Sep-07 A	22-Oct-07 A
SDS25090	Produce Street Lighting Design (& Liaise With OLE)	182d	01-Feb-07 A	06-Nov-07 A
SDS25100	Produce Traffic Signal Only Ducting	33d	04-Sep-07 A	22-Oct-07 A
SDS25110	Produce Soft Landscaping Design	39d	12-Sep-07 A	08-Nov-07 A
SDS25120	Produce Traffic Signals Layout	16d	02-Aug-07 A	24-Aug-07 A
SDS25130	Produce Traffic Signs Design (Signs, Markings, Signals)	53d	02-Aug-07 A	22-Oct-07 A
SDS25140	Produce Earthworks Design (NOT REQUIRED)	1d	03-Sep-07 A	03-Sep-07 A
SDS25360	Revise Alignment to Inc. Final Track Horizontal Alignment (Horizontal Design Freeze) & Issue to Substn Designers	61d	01-May-07 A	01-Aug-07 A
SDS25370	Produce Kerbs, Footway & Paved Area Design	53d	02-Aug-07 A	22-Oct-07 A
SDS25380	Produce Pavement Design	33d	04-Sep-07 A	22-Oct-07 A
SDS56210	Issue Notification Of Completion Letter- Hard & Soft Landscaping Design to tie Section 1B	0d		09-Nov-07 A
SDS56750	Issue Notification Of Completion Letter- Street Lighting Design (Inc. Any OLE Combined Pole Design) to tie Section 1B	0d		09-Nov-07 A
SDS59670	Advise Track, Stops, Modellers Changes To Accom RSA1 & PD Comments	5d	29-Nov-06 A	06-Dec-06 A
SDS59680	Pass Guidance/Envelope To Track & Others As Necessary	0d		07-Dec-06 A
SDS67240	Street Lighting Survey Work	17d	07-Nov-06 A	30-Nov-06 A
SDS69630	Produce Hard Landscaping Design NOT REQUIRED	75d	04-Jun-07 A	24-Sep-07 A
SDS69840	Resolution of Red Issues (tie Approval)	0d	13-Jul-07 A	
SDS69850	Advise Track, Stops, Modellers Changes To Accom RSA1 & PD Comments	34d	10-Apr-07 A	01-Jun-07 A
SDS69860	Pass Guidance/Envelope To Track & Others As Necessary	0d		01-Jun-07 A
SDS79940	Final RSA	9d	29-Jan-08	11-Feb-08
SDS79950	Incorporate Final RSA Comments	5d	12-Feb-08	18-Feb-08
VO147 Bottom of Leith Walk		156d	06-Dec-06 A	20-Jul-07 A
VO1670	Track	70d	06-Dec-06 A	28-Mar-07 A
VO1680	OLE	112d	06-Dec-06 A	04-Jun-07 A
VO1690	Traffic/Junction Modelling	94d	06-Dec-06 A	04-May-07 A
VO1700	Runtime Simulation	112d	06-Dec-06 A	04-Jun-07 A
VO1710	TRO	112d	06-Dec-06 A	04-Jun-07 A
VO1720	Roads	139d	06-Dec-06 A	13-Jul-07 A
VO1730	Systems and Communications	115d	06-Dec-06 A	08-Jun-07 A
VO1740	Utilities	5d	06-Dec-06 A	12-Dec-06 A
VO1750	Reporting and review	5d	16-Jul-07 A	20-Jul-07 A
VO148 Bus Provision for Foot of the walk and Constiution Street		46d	06-Dec-06 A	16-Feb-07 A
VO2290	Track	25d	06-Dec-06 A	19-Jan-07 A
VO2300	Tram stops	25d	06-Dec-06 A	19-Jan-07 A
VO2310	Roads	39d	06-Dec-06 A	09-Feb-07 A
VO2320	Urban Design	25d	06-Dec-06 A	19-Jan-07 A
VO2330	Reporting and Review	5d	12-Feb-07 A	16-Feb-07 A
Drainage		253d	12-Mar-07 A	10-Mar-08
SDS71070	Hydraulic Modelling & First Pass Drainage Design	127d	12-Mar-07 A	21-Sep-07 A
SDS71080	Receipt of Drainage Survey Information	0d		25-Feb-08*
SDS71090	Outfall Consent/Approval from SW (NOT REQUIRED)	0d		28-Aug-07 A
SDS71100	Outfall Consent/Approval from CEC (NOT REQUIRED)	0d		28-Aug-07 A
SDS71110	Outfall Consent/Approval from SEPA	0d		07-May-07 A
SDS71130	Issue Drainage Design Completion Letter to tie for Approval Section 1B INCLUDED IN ROADS SUBMISSION	0d		07-Nov-07 A
SDS73180	Detailed Drainage Design and Review of Hydraulic Modelling	16d	31-Aug-07 A	24-Sep-07 A
SDS80670	Final Detailed Drainage Design	8d	17-Oct-07 A	29-Oct-07 A
SDS80680	Confirm Drainage and amend if necessary	9d	25-Feb-08	10-Mar-08
Traffic Modelling		45d	22-May-06 A	21-Jul-06 A
SDS56020	JRC Receive Junction Layouts	0d		22-May-06 A
SDS56030	JRC Prepare VISSIM Initial Traffic Flows (Low Level Model)	9d	05-Jun-06 A	16-Jun-06 A
SDS56040	SDS Produce LINSIG/TRANSYT Assessments (Iteration 1)	14d	03-Jul-06 A	21-Jul-06 A
Boundary & Accomodation Works (Task300.3.4)		208d	16-Apr-07 A	08-Feb-08
SDS41830	Detailed Design of Boundary & Accomodation Works	99d	16-Apr-07 A	13-Sep-07 A
SDS41840	Issue Notification Of Completion Letter- Detailed Design of Boundary & Accomodation Works Section 1B	0d		14-Sep-07 A
SDS41850	Additional Boundary and Accommodation Works and Review	53d	14-Nov-07 A	08-Feb-08
Utilities Plates 22 to 31		378d	06-Mar-06 A	27-Aug-07 A
A11370	Close Out PD Issues & Propose Diversions	52d	29-Aug-06 A	13-Nov-06 A
A11380	Issue PD to SUCs	0d		16-Oct-06 A
A11390	Consult SUCs and MUDFA (at later stage - when appointed)	53d	30-Oct-06 A	23-Jan-07 A
A11400	Access to MUDFA	0d		23-Oct-06 A
A11410	Issue For IDC	0d		23-Jan-07 A
A11420	IDC For Utilities	9d	24-Jan-07 A	06-Feb-07 A

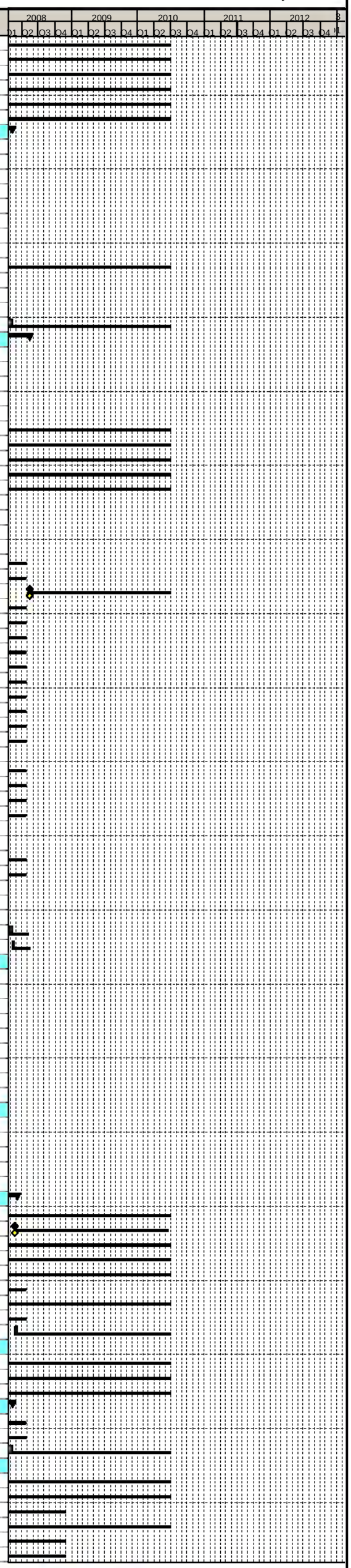

Primary Baseline
Actual Work
Remaining Work
Critical Remaining Work
Baseline Milestone
Milestone

Trams for Edinburgh ..connecting our Capital

Edinburgh Tram Project

SDS FULL DESIGN PROGRAMME @ V26

tie

Activity ID	Activity Name	Original Duration	Start	Finish
A11430	Issue to SUCs	0d		06-Feb-07 A
A11440	SUCs Approval	112d	06-Feb-07 A	26-Jul-07 A
A11450	Compile First Draft IFC Drawings Section 1B	21d	26-Jul-07 A	27-Aug-07 A
UTIL040	Section 1B - Pre-Preliminary Design (Utilities)	46d	06-Mar-06 A	16-May-06 A
UTIL300	Issue to Statutory Utility Companies (SUCs)	0d		16-May-06 A
TRO's (Task300.3.6)		518d	10-May-06 A	22-May-08
SDS33110	Collate Exisiting TROs	42d	10-May-06 A	12-Jul-06 A
SDS33120	Receive Preliminary Roads Design	0d		12-Jul-06 A
SDS81930	Interim TRO Design Section 1B	5d	28-Jan-08*	01-Feb-08
SDS81940	Final TRO Design Section 1B	5d	16-May-08	22-May-08
TTRO's (Task300.3.7)		186d	29-Aug-06 A	24-May-07 A
TTRO220	SDS Produce Affected Roads Listing For MUDFA Works	64d	29-Aug-06 A	30-Nov-06 A
TTRO270	SDS Produce Affected Roads Listing For INFRACO Works	36d	12-Mar-07 A	04-May-07 A
TTRO400	Dundas & Wilson Draft TTRO Schedule For MUDFA Works	6d	01-Dec-06 A	08-Dec-06 A
TTRO430	Dundas & Wilson Draft TTRO Schedule For INFRACO Works	23d	29-Mar-07 A	04-May-07 A
TTRO480	Issue Affected Roads Listing For MUDFA Works To Dundas & Wilson Section 1B	0d		30-Nov-06 A
TTRO500	Issue Affected Roads Listing For INFRACO Works To Dundas & Wilson Section 1B	0d		24-May-07 A
MDR - BAS		986d	19-Sep-05 A	28-Jul-09
CON-0190	Requirements Definition (Contract Dates)	62d	19-Sep-05 A	19-Dec-05 A
Tram Stop Balfour Street (Task300.3.8)		824d	03-May-06 A	28-Jul-09
A24940	Prepare Tram Stop Planning Submission Drawings for issue Planning Drawing Team	71d	01-Jun-07 A	17-Sep-07 A
A24950	Produce Engineering Detailed Design Drawings	38d	18-Sep-07 A	13-Nov-07 A
A25180	Issue Notification Of Completion Letter- Balfour Street Tram Stop Design to tie	0d		13-Nov-07 A
A25920	Tram Stop Design Complete - Drawings Issued for Construction	0d		14-Mar-08
A27430	Site Visit with tie & CEC To Review Preliminary Design	1d	02-Mar-07 A	02-Mar-07 A
A28240	Redraw - Due to Moving Moving Stop 25m	8d	10-Oct-06 A	19-Oct-06 A
A43970	Prepare Detailed Design Stop Drawings	66d	17-Nov-06 A	02-Mar-07 A
A47240	Produce As Built Drawings	200d	03-Oct-08	28-Jul-09
A47250	Receive Final As Built Data from the Contractor	0d		30-Jun-09
A47260	Receive First As Built Data from the Contractor	0d		01-Oct-08*
A47270	Issue Final As Built Drawings	0d		28-Jul-09
A4770	General Arrangement Drawings	35d	03-May-06 A	23-Jun-06 A
A5150	Issue Tram Stop GA Drawings for Balfour Street	0d		30-Jun-06 A
Structures		392d	13-Mar-06 A	20-Sep-07 A
S18 - Leith Walk Railway Bridge (Task300.3.9)		392d	13-Mar-06 A	20-Sep-07 A
SDS44640	Review of Previous Work	9d	13-Mar-06 A	24-Mar-06 A
SDS44650	Optioneering	5d	27-Mar-06 A	31-Mar-06 A
SDS44660	Initial Design	12d	24-Apr-06 A	11-May-06 A
SDS44670	Production of AIP Drawing	8d	02-May-06 A	11-May-06 A
SDS44680	Issue AIP Drawing to tie	0d		12-May-06 A
SDS44690	Checking	4d	12-May-06 A	17-May-06 A
SDS44700	tie AIP Drawing Review Period	4d	12-May-06 A	17-May-06 A
SDS44710	Undertake Consultations	6d	12-May-06 A	19-May-06 A
SDS44720	Receive AIP Drawing Comments from tie	0d		17-May-06 A
SDS44730	Incorporate tie Comments into AIP Drawing	23d	18-May-06 A	21-Jun-06 A
SDS44740	Production of AIP Document	7d	22-Jun-06 A	30-Jun-06 A
SDS44750	Issue Leith Walk AIP Document to tie	0d		30-Jun-06 A
SDS44760	tie AIP Document Review Period	5d	22-Jun-06 A	28-Jun-06 A
SDS44770	Receive AIP Document Comments from tie	0d		28-Jun-06 A
SDS44780	Incorporate tie Comments into AIP Document	4d	23-Jun-06 A	28-Jun-06 A
SDS44790	Issue AIP Document & Drawing to TAA	0d		14-Aug-06 A
SDS44800	TAA AIP Document & Drawing Review Period	9d	14-Aug-06 A	28-Aug-06 A
SDS44810	Issue AIP Document & Drawing to Planning Department	0d		11-Jul-06 A
SDS44820	Planning Department AIP Document & Drawing Review Period	74d	11-Jul-06 A	30-Oct-06 A
SDS44830	Recieve AIP Document & Drawing Comments from TAA	0d		23-Oct-06 A
SDS44840	Incorporate TAA Comments into AIP Document & Drawing	5d	23-Oct-06 A	27-Oct-06 A
SDS44850	Recieve AIP Document & Drawing Comments from Planning Department	0d		30-Oct-06 A
SDS44860	Incorporate Planning Department TAA Comments into AIP Document & Drawing	5d	31-Oct-06 A	06-Nov-06 A
SDS44870	Issue AIP Drawing & Document to Structures Detailed Design Team	0d		12-Dec-06 A
Leith Walk Rail Bridge Preliminary Design Milestones		89d	09-Aug-06 A	12-Dec-06 A
A7820	Receipt of tie PD Acceptance	0d		09-Aug-06 A
A7830	Receipt of Alignment Prelim Design Package	0d		23-Oct-06 A
A7850	Receipt of Approved and Signed AIP Document	0d		12-Dec-06 A
Leith Walk Rail Bridge Structure Assessment		83d	13-Nov-06 A	16-Mar-07 A
A47960	Detailed Design Resourcing	79d	13-Nov-06 A	16-Mar-07 A
A7860	Structure Assessment	34d	13-Nov-06 A	09-Jan-07 A
A7870	Issue Structure Assessment Package to CAT I Checker	0d		09-Jan-07 A
A7880	Structure Assessment Package CAT I Check	31d	10-Jan-07 A	23-Feb-07 A
A7890	Receive and Incoporate CAT I Comments	5d	26-Feb-07 A	02-Mar-07 A
A7900	Issue Leith Walk Rail Bridge Assessment Report to tie (NOT REQ. DIRECT TO CEC)	0d		16-Mar-07 A
SDS61910	IDC	9d	05-Mar-07 A	16-Mar-07 A
Leith Walk Rail Bridge Issue Structure Assessment Package for Construction / Fabrication		0d	20-Sep-07 A	20-Sep-07 A
A8020	IFC NOT REQUIRED-SEE CORRESPONDENCE TO TIE 20/9/07	0d		20-Sep-07 A
BAS - FOW		556d	19-Sep-05 A	14-Nov-07 A
CON-0220	Requirements Definition (Contract Dates)	62d	19-Sep-05 A	19-Dec-05 A
Tram Leith Walk 163 Substation (Task300.3.11)		391d	08-May-06 A	14-Nov-07 A
A548950	Preliminary Design of Substation	19d	08-May-06 A	02-Jun-06 A
A549140	Detailed Design Civils	173d	20-Feb-07 A	09-Nov-07 A
A549150	Detailed Architecture Design	230d	17-Nov-06 A	09-Nov-07 A
A549160	IDC on Detailed Design (Inc. Systems Assurance)	9d	01-Nov-07 A	14-Nov-07 A
A549170	Issue Notification Of Completion Letter- Tram Leith Walk 163 Substation Planning Submission to tie for Approval	0d		01-Oct-07 A
A549630	Batch 1/09 Tram Leith Walk 163 Substation - Collation of Planning Drawings	3d	08-Nov-07 A	13-Nov-07 A
A550030	Substation Consultation Period	28d	19-Jun-06 A	27-Jul-06 A
A550150	Issue of Leith Walk Substation Design	0d		30-Jun-06 A
PSW - MDR - Section 1C (Task300.4)		986d	19-Sep-05 A	28-Jul-09
Sub Section Wide		575d	06-Mar-06 A	05-Jun-08
SDS69430	SDM Design Interface Review Meetings	1d	01-Dec-06 A	02-Dec-06 A
Sub Section Wide IDC		20d	04-Feb-08	29-Feb-08
A40191	Subsection Wide IDC	19d	04-Feb-08	29-Feb-08
Design Assurance Review		10d	03-Mar-08	14-Mar-08
SDS67930	Produce Design Assurance Statement	9d	03-Mar-08	14-Mar-08
Consents & Approvals		237d	25-Jun-07 A	29-May-08
Prior Approvals		228d	25-Jun-07 A	19-May-08
Combined Section Prior Approval		60d	25-Feb-08	19-May-08
A25230	Issue Combined Package 1C for Prior Approval to CEC	0d		25-Feb-08
A25240	Receive Combined Package 1C Comments From CEC	0d		21-Apr-08
A25280	Prior Approval Granted for Section 1C Combined Package	0d		19-May-08
A40210	CEC Approval Period - 1C Combined Package	38d	25-Feb-08	21-Apr-08
A40220	Update 1C Combined Package to CEC Comments	19d	21-Apr-08	19-May-08
Batch 1/11		97d	22-Oct-07 A	14-Mar-08
SDS78200	Batch 1/11 Formal Approval Period	38d	18-Jan-08	13-Mar-08
SDS78210	Issue Batch 1/11 For Approval to CEC	0d	18-Jan-08	
SDS78220	Receive CEC Prior Approval For Batch 1/11	0d	14-Mar-08	

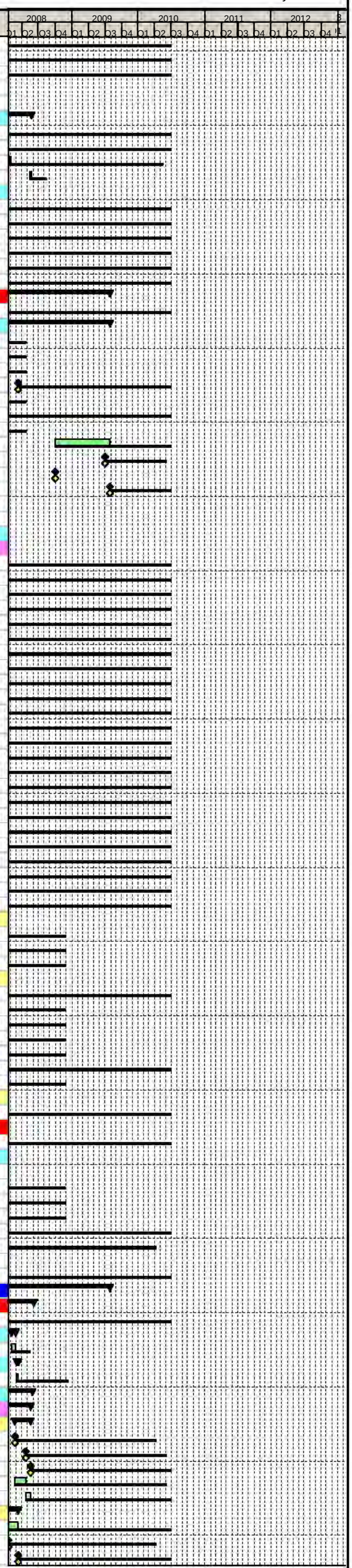

Primary Baseline
Actual Work
Remaining Work
Critical Remaining Work
Baseline Milestone
Milestone

Trams for Edinburgh
connecting our Capital

Edinburgh Tram Project

SDS FULL DESIGN PROGRAMME @ V26

tie

Activity ID	Activity Name	Original Duration	Start	Finish
SDS78250	Batch 1/11 McDonald Road Tramstop - Collation of Planning Drawings	54d	22-Oct-07 A	17-Jan-08
Batch 1/12		52d	11-Feb-08	23-Apr-08
SDS78260	Batch 1/12 Formal Approval Period	38d	25-Feb-08	22-Apr-08
SDS78270	Issue Batch 1/12 For Approval to CEC	0d	25-Feb-08	
SDS78280	Receive CEC Prior Approval For Batch 1/12	0d	23-Apr-08	
SDS78310	Batch 1/12 Picardy Place Tramstop - Collation of Planning Drawings	9d	11-Feb-08*	22-Feb-08
Batch 1/13		52d	28-Jan-08	09-Apr-08
SDS78320	Batch 1/13 Formal Approval Period	38d	11-Feb-08	08-Apr-08
SDS78330	Issue Batch 1/13 For Approval to CEC	0d	11-Feb-08	
SDS78340	Receive CEC Prior Approval For Batch 1/13	0d	09-Apr-08	
SDS78370	Batch 1/13 York Place - Collation of Planning Drawings	9d	28-Jan-08*	08-Feb-08
Batch 1/14 Tram Cathedral Lane Substation		91d	25-Jun-07 A	29-Oct-07 A
A27890	Issue Tram Catherdral Lane Substation Design To CEC For Planning Permission	0d		17-Aug-07 A
A27900	Planning Permission Granted For Tram Cathedral Lane Substation	0d		29-Oct-07 A
A41120	Informal Consultation With CEC & tie Over Planning Permission Tram Catherdral Lane Substation	38d	25-Jun-07 A	17-Aug-07 A
A41130	Batch 1/14 Formal Approval Period	48d	17-Aug-07 A	29-Oct-07 A
Batch 1/15		52d	16-Jan-08	28-Mar-08
SDS78440	Batch 1/15 Formal Approval Period	38d	30-Jan-08	27-Mar-08
SDS78450	Issue Batch 1/15 For Approval to CEC	0d	30-Jan-08	
SDS78460	Receive CEC Prior Approval For Batch 1/15	0d	28-Mar-08	
SDS78490	Batch 1/15 St Andrew Square Tramstop - Collation of Planning Drawings	9d	16-Jan-08*	29-Jan-08
Roads, Track, OLE, Landscaping, Street Lighting		93d	27-Aug-07 A	14-Jan-08
SDS25680	Informal Consultation With CEC & tie Over Prior Approval for Roads, Track, OLE, Landscaping and Street Lighting	88d	27-Aug-07 A	14-Jan-08
Tram Stop Picardy Place		40d	14-Jan-08	07-Mar-08
A40290	Informal Consultation With CEC & tie over Prior Approval Tram stop Piccardy Place	38d	14-Jan-08	07-Mar-08
Tram Stop St. Andrew Square		40d	14-Jan-08	07-Mar-08
A40260	Informal Consultation With CEC & tie over Prior Approval Tram Stop St Andrew Square	38d	14-Jan-08	07-Mar-08
Tram Stop McDonald Road		55d	27-Aug-07 A	12-Nov-07 A
A40320	Informal Consultation With CEC & tie over Prior Approval Tram Stop MacDonald Road	52d	27-Aug-07 A	12-Nov-07 A
Technical Approvals		127d	26-Nov-07 A	29-May-08
Roads inc Drainage Technical Approval		127d	26-Nov-07 A	29-May-08
SDS25690	Issue Roads Design to Roads Authority for Approval	0d		29-Feb-08
SDS25700	Roads Authority Approval Period	38d	03-Mar-08	29-Apr-08
SDS25710	Receive Roads Authority Comments	0d		29-Apr-08
SDS25720	Update to Roads Authority Comments	19d	30-Apr-08	29-May-08
SDS25730	Roads Authority Informal Consultation	60d	26-Nov-07 A	29-Feb-08
SDS25800	Roads Technical Approval Granted	0d		29-May-08
VO22 Charette Changes St Andrew Square CNB010		123d	17-Jul-06 A	15-Jan-07 A
Optioneering		21d	14-Aug-06 A	12-Sep-06 A
A1030	Receive Notice to Proceed from Client	0d	12-Sep-06 A	
A2830	Exploratory Assessment	4d	14-Aug-06 A	17-Aug-06 A
A2840	2-Hour Meeting With CEC	0d	18-Aug-06 A	
Feasibility (2 Designs)		56d	17-Jul-06 A	02-Oct-06 A
A2850	Roads Feasibility Assessment	33d	07-Aug-06 A	25-Sep-06 A
A2860	2-Hour Meeting With CEC - Update	0d	26-Sep-06 A	
A2870	Feasibility Statement Assessment (Not Full Report)	5d	26-Sep-06 A	02-Oct-06 A
A2990	Feasibility Drawings (With Statement Assessment)	5d	26-Sep-06 A	02-Oct-06 A
A3120	With CEC For Approval	0d	02-Oct-06 A	
A6820	Track Feasibility Assessment	47d	17-Jul-06 A	25-Sep-06 A
Preliminary Design (1 Design)		88d	04-Sep-06 A	15-Jan-07 A
A15200	Environmental	5d	02-Oct-06 A	06-Oct-06 A
A15210	Urban Design	5d	16-Oct-06 A	20-Oct-06 A
A15220	Stops Design	9d	23-Oct-06 A	03-Nov-06 A
A15230	Management Support	60d	04-Sep-06 A	30-Nov-06 A
A3250	Preliminary Road Design	5d	23-Oct-06 A	27-Oct-06 A
A3380	Preliminary Junction Design	5d	30-Oct-06 A	03-Nov-06 A
A3510	Integration With Traffic Modelling	5d	06-Nov-06 A	10-Nov-06 A
A3630	2-Hour Meeting With CEC - Update (Not Required)	0d	13-Nov-06 A	
A3750	Roads Technical Design Statement (Not Required)	5d	06-Nov-06 A	10-Nov-06 A
A3880	TRO Schedules & Plans (Not Required)	5d	13-Nov-06 A	17-Nov-06 A
A4140	Utilities Design Update	5d	13-Nov-06 A	17-Nov-06 A
A4150	TTROs report and plans (Not Required)	5d	13-Nov-06 A	17-Nov-06 A
A4330	4-hour Meeting With CEC for Approval	0d	06-Dec-06 A	
A6830	Preliminary Track Design	5d	16-Oct-06 A	20-Oct-06 A
A6920	Integration With OLE Design	33d	17-Nov-06 A	15-Jan-07 A
VO24 Charette Changes Princes Street CNB012		88d	01-Aug-06 A	30-Nov-06 A
Optioneering		30d	14-Aug-06 A	25-Sep-06 A
A5980	Receive Notice to Proceed from Client	0d	25-Sep-06 A	
A5990	Exploratory Assessment	4d	14-Aug-06 A	17-Aug-06 A
A6000	2-Hour Meeting With CEC	0d	25-Sep-06 A	
Feasibility (2 Designs)		40d	01-Aug-06 A	26-Sep-06 A
A6010	Roads Feasibility Assessment	9d	12-Sep-06 A	25-Sep-06 A
A6020	2-Hour Meeting With CEC - Update	0d	26-Sep-06 A	
A6030	Feasibility Statement Assessment (Not Full Report)	5d	19-Sep-06 A	25-Sep-06 A
A6040	Feasibility Drawings (With Statement Assessment)	5d	19-Sep-06 A	25-Sep-06 A
A6050	With CEC For Approval	0d	25-Sep-06 A	
A6840	Track Feasibility Assessment	9d	01-Aug-06 A	14-Aug-06 A
Preliminary Design (1 Design)		64d	04-Sep-06 A	30-Nov-06 A
A15160	Environmental	5d	02-Oct-06 A	06-Oct-06 A
A15170	Urban Design	5d	16-Oct-06 A	20-Oct-06 A
A15180	Stops Design	9d	23-Oct-06 A	03-Nov-06 A
A15190	Management Support	60d	04-Sep-06 A	30-Nov-06 A
A6060	Preliminary Road Design	8d	03-Oct-06 A	12-Oct-06 A
A6070	Preliminary Junction Design	7d	13-Oct-06 A	23-Oct-06 A
A6080	Integration With Traffic Modelling	5d	24-Oct-06 A	30-Oct-06 A
A6090	2-Hour Meeting With CEC - Update (Not Required)	0d	31-Oct-06 A	
A6100	Roads Technical Design Statement (Not Required)	5d	23-Oct-06 A	27-Oct-06 A
A6110	TRO Schedules & Plans (Not Required)	5d	31-Oct-06 A	06-Nov-06 A
A6120	Utilities Design Update	9d	31-Oct-06 A	13-Nov-06 A
A6130	TTROs report and plans (Not Required)	9d	31-Oct-06 A	13-Nov-06 A
A6150	Preliminary Design Submission (Not Required)	5d	14-Nov-06 A	20-Nov-06 A
A6160	IDCs (Not Required)	5d	13-Nov-06 A	17-Nov-06 A
A6850	Preliminary Track Design	5d	16-Oct-06 A	20-Oct-06 A
A6930	Integration With OLE Design	5d	23-Oct-06 A	27-Oct-06 A
VO25 Charette Changes Picardy Place CNB013		91d	01-Aug-06 A	06-Dec-06 A
Optioneering		21d	14-Aug-06 A	12-Sep-06 A
A6180	Receive Notice to Proceed from Client	0d	12-Sep-06 A	
A6190	Exploratory Assessment	4d	14-Aug-06 A	17-Aug-06 A
A6200	2-Hour Meeting With CEC	0d	12-Sep-06 A	
Feasibility (2 Designs)		36d	01-Aug-06 A	20-Sep-06 A
A6210	Roads Feasibility Assessment	24d	07-Aug-06 A	12-Sep-06 A
A6220	2-Hour Meeting With CEC - Update	0d	13-Sep-06 A	
A6230	Feasibility Statement Assessment (Not Full Report)	5d	13-Sep-06 A	19-Sep-06 A

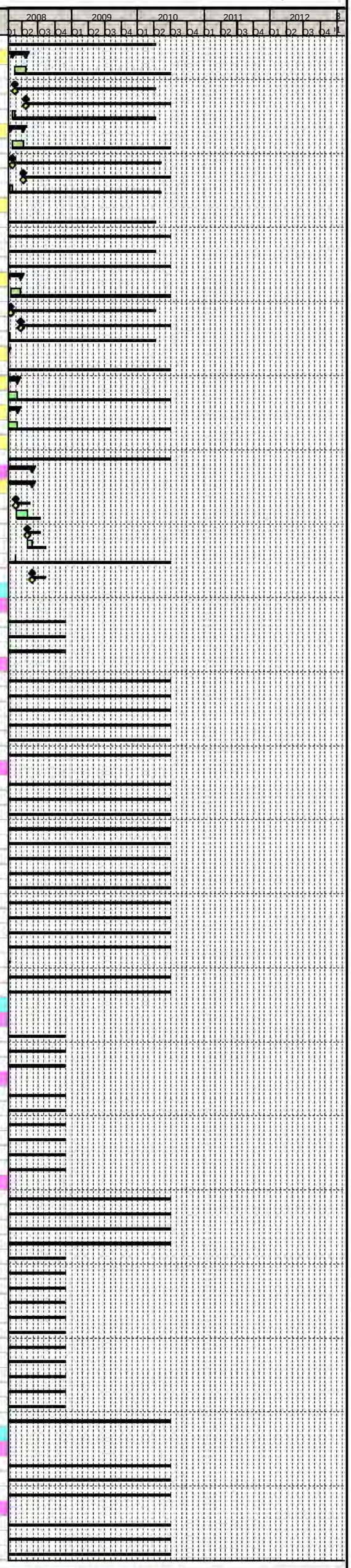

Primary Baseline
Actual Work
Remaining Work
Critical Remaining Work
Baseline Milestone
Milestone

Trams for Edinburgh
...connecting our Capital

Edinburgh Tram Project

SDS FULL DESIGN PROGRAMME @ V26

tie

Activity ID	Activity Name	Original Duration	Start	Finish
A6240	Feasibility Drawings (With Statement Assessment)	5d	13-Sep-06 A	19-Sep-06 A
A6250	With CEC For Approval	0d	20-Sep-06 A	
A6860	Track Feasibility Assessment	9d	01-Aug-06 A	14-Aug-06 A
Preliminary Design (1 Design)		67d	04-Sep-06 A	06-Dec-06 A
A15130	Urban Design	5d	16-Oct-06 A	20-Oct-06 A
A15140	Stops Design	9d	23-Oct-06 A	03-Nov-06 A
A15150	Management Support	60d	04-Sep-06 A	30-Nov-06 A
A6260	Preliminary Road Design	33d	25-Sep-06 A	10-Nov-06 A
A6270	Preliminary Junction Design	30d	05-Oct-06 A	17-Nov-06 A
A6280	Integration With Traffic Modelling	5d	13-Nov-06 A	17-Nov-06 A
A6290	2-Hour Meeting With CEC - Update (Not Required)	0d	17-Nov-06 A	
A6300	Roads Technical Design Statement (Not Required)	23d	16-Oct-06 A	17-Nov-06 A
A6310	TRO Schedules & Plans (Not Required)	2d	16-Nov-06 A	17-Nov-06 A
A6320	Utilities Design Update	2d	16-Nov-06 A	17-Nov-06 A
A6330	TTROs report and plans (Not Required)	2d	16-Nov-06 A	17-Nov-06 A
A6370	4-hour Meeting With CEC for Approval	0d	06-Dec-06 A	
A6870	Preliminary Track Design	5d	16-Oct-06 A	20-Oct-06 A
A6940	Integration With OLE Design	5d	20-Nov-06 A	24-Nov-06 A
A9510	Environmental	5d	02-Oct-06 A	06-Oct-06 A
VO212 St Andrew Square Design Acceleration		18d	22-Oct-07 A	14-Nov-07 A
SDS81360	St Andrew Square Design Acceleration Roads	17d	22-Oct-07 A	14-Nov-07 A
SDS81370	St Andrew Square Design Acceleration OLE	17d	22-Oct-07 A	14-Nov-07 A
SDS81380	St Andrew Square Design Acceleration Traffic Modelling	17d	22-Oct-07 A	14-Nov-07 A
SDS81390	St Andrew Square Design Acceleration Track layouts and iterations with Roads team	17d	22-Oct-07 A	14-Nov-07 A
SDS81400	St Andrew Square Design Acceleration Tram Stop cooridination and development	17d	22-Oct-07 A	14-Nov-07 A
SDS81410	St Andrew Square Design Acceleration Utilities	17d	22-Oct-07 A	14-Nov-07 A
Track (Task300.4.1)		508d	09-Mar-06 A	07-Mar-08
A2480	First Pass Mx Horizontal and Vertical Alignment	53d	09-Mar-06 A	31-May-06 A
A2490	Handover Alignment Design P Way to Roads	0d		01-Jun-06 A
A2500	Coordination Meeting/Workshop Between PWay/Roads & Resolution of Major Conflicts	1d	01-Jun-06 A	01-Jun-06 A
SDS25400	Revise Alignment to Match Roads First Pass Vertical	9d	04-Sep-07 A	17-Sep-07 A
SDS25450	Handover Alignment Design Track to Roads	0d		17-Sep-07 A
SDS25840	Handover Alignment Design Track to Roads	0d		20-Dec-06 A
SDS57030	Issue Notification Of Completion Letter- Track Alignment Design to tie Section 1C	0d		09-Nov-07 A
SDS61080	Revise Alignment to Inc. Preliminary Design Comments	9d	07-Dec-06 A	20-Dec-06 A
SDS67790	Advanced Work on Detailed Design Alignment	8d	29-Aug-06 A	08-Sep-06 A
SDS69890	Revise Alignment to Inc. Preliminary Design Comments	99d	05-Mar-07 A	03-Aug-07 A
SDS69900	Handover Alignment Design Track to Roads	0d		03-Aug-07 A
SDS69920	Final Alignment to Match Roads & Check	32d	18-Sep-07 A	02-Nov-07 A
SDS69970	Advanced Works Of Revise Alignment to Inc. Preliminary Design Comments	1d	09-Feb-07 A	09-Feb-07 A
SDS81010	Address tie comments, Other Revisions, IDC and Section Submission Packages	65d	26-Nov-07 A	07-Mar-08
Roads, Street Lighting & Landscaping (Task300.4.2)		569d	07-Mar-06 A	29-May-08
A2510	Route Appreciation/Junct Layout & Determine with tie & CEC Works Extent	38d	09-Mar-06 A	09-May-06 A
A2520	Frontage Surveys	30d	07-Mar-06 A	21-Apr-06 A
A2530	Set Up Mx Models	26d	13-Mar-06 A	21-Apr-06 A
A2540	Produce Preliminary Horizontal Road Alignment Design (Inc Lanes & Parking Zones)	18d	10-May-06 A	06-Jun-06 A
A2550	Preliminary Rd Junction Configuration Design	5d	07-Jun-06 A	13-Jun-06 A
A2560	Preliminary Road Safety Audit	4d	27-Jun-06 A	30-Jun-06 A
A2570	Review & Amend TRO Drawings & Schedules for Modifications Required Post Prelim Design	3d	12-Jun-06 A	14-Jun-06 A
A2580	Handover Alignment Design Roads to Pway	0d		30-Jun-06 A
A2590	Coordination Meeting/Workshop Between Roads & Pway Teams	1d	19-Jun-06 A	19-Jun-06 A
A5470	Undertake Road Marking, Pedestrian Req & Traffic Signalling Design	5d	07-Jun-06 A	13-Jun-06 A
SDS25410	Produce First Pass Vertical Alignment	9d	20-Aug-07 A	03-Sep-07 A
SDS25430	Handover Alignment Design Roads to Pway	0d		03-Sep-07 A
SDS25460	Revise Vertical Alignment to Match Final Track Alignment	42d	18-Sep-07 A	19-Nov-07 A
SDS25470	Horizontal & Vertical Alignment Design Complete	0d		19-Nov-07 A
SDS25480	Issue Notification Of Completion Letter- Roads Design to tie for Approval Section 1C	0d		19-Dec-07 A
SDS25490	Cross Check all Horizontal Design Aspects With Vertical Alignment	3d	27-Nov-07 A	29-Nov-07 A
SDS25530	Issue Construction Drawings	0d		29-May-08
SDS25560	Produce Site Clearance Drawings & Schedule	60d	29-Aug-07 A	26-Nov-07 A
SDS25570	Produce Fencing, Barriers & Guardrails Design	24d	22-Oct-07 A	26-Nov-07 A
SDS25580	Produce Street Lighting Design (& Liaise With OLE)	227d	01-Feb-07 A	21-Jan-08
SDS25590	Produce Traffic Signal Only Ducting	10d	12-Nov-07 A	26-Nov-07 A
SDS25600	Produce Soft Landscaping Design	42d	12-Nov-07 A	21-Jan-08
SDS25610	Produce Traffic Signals Layout	60d	29-Aug-07 A	26-Nov-07 A
SDS25620	Produce Traffic Signs Design (Signs, Markings, Signals)	60d	29-Aug-07 A	26-Nov-07 A
SDS25630	Produce Earthworks Design (NOT REQUIRED)	1d	03-Sep-07 A	03-Sep-07 A
SDS25850	Revise Alignment to Inc. Final Track Horizontal Alignment (Horizontal Design Freeze)	78d	01-May-07 A	28-Aug-07 A
SDS25860	Produce Kerbs, Footway & Paved Area Design	66d	20-Aug-07 A	26-Nov-07 A
SDS25870	Produce Pavement Design	10d	12-Nov-07 A	26-Nov-07 A
SDS56250	Issue Notification Of Completion Letter- Hard & Soft Landscaping Design to tie Section 1C	0d		11-Feb-08
SDS56760	Issue Notification Of Completion Letter- Street Lighting Design (Inc. Any OLE Combined Pole Design) to tie Section 1C	0d		08-Jan-08 A
SDS59310	Compile Planning Drawings	15d	27-Nov-07 A	18-Dec-07 A
SDS59650	Advise Track, Stops, Modellers Changes To Accom RSA1 & PD Comments	26d	24-Apr-07 A	04-Jun-07 A
SDS59660	Pass Guidance/Envelope To Track & Others As Necessary (& Issue to Substn Designers)	0d		02-Jul-07 A
SDS67250	Street Lighting Survey Work	69d	29-Aug-06 A	08-Dec-06 A
SDS69640	Produce Hard Landscaping Design	163d	04-Jun-07 A	11-Feb-08
SDS69910	Resolution of Red Issues (tie Approval)	0d	12-Jul-07 A	
SDS79260	Final RSA	9d	11-Feb-08	22-Feb-08
SDS79270	Incorporate Final RSA Comments	5d	25-Feb-08	29-Feb-08
SDS80990	Issue Notification Of Completion Letter- Roads Design to tie for Approval Section 1C (Part Submission Only)	0d		14-Nov-07 A
Drainage		254d	12-Mar-07 A	10-Mar-08
SDS71170	Hydraulic Modelling & First Pass Drainage Design	127d	12-Mar-07 A	21-Sep-07 A
SDS71180	Receipt of Drainage Survey Information	0d		25-Feb-08*
SDS71190	Outfall Consent/Approval from SW (NOT REQUIRED)	0d		28-Aug-07 A
SDS71200	Outfall Consent/Approval from CEC (NOT REQUIRED)	0d		28-Aug-07 A
SDS71210	Outfall Consent/Approval from SEPA	0d		07-May-07 A
SDS71230	Issue Drainage Design Completion Letter to tie for Approval Section 1C ISSUED WITH ROADS	0d		19-Dec-07 A
SDS73190	Detailed Drainage Design and Review of Haydraulic Modelling	2d	21-Sep-07 A	24-Sep-07 A
SDS80690	Final Detailed Drainage Design	34d	22-Oct-07 A	10-Dec-07 A
SDS80700	Confirm Drainage and amend if necessary	9d	26-Feb-08	10-Mar-08
Traffic Modelling		23d	13-Jun-06 A	14-Jul-06 A
SDS56050	JRC Receive Junction Layouts	0d		13-Jun-06 A
SDS56060	JRC Prepare VISSIM Initial Traffic Flows (Low Level Model)	9d	19-Jun-06 A	30-Jun-06 A
SDS56070	SDS Produce LINSIG/TRANSYT Assessments (Iteration 1)	9d	03-Jul-06 A	14-Jul-06 A
Boundary & Accomodation Works (Task300.4.4)		110d	16-Apr-07 A	14-Sep-07 A
SDS41890	Detailed Design of Boundary & Accomodation Works	99d	16-Apr-07 A	13-Sep-07 A
SDS41900	Issue Notification Of Completion Letter- Detailed Design of Boundary & Accomodation Works Section 1C	0d		14-Sep-07 A
VO140 St Andrew Square Pole Locations		179d	17-Jan-07 A	24-Sep-07 A
VO2600	Ole Re-design	163d	17-Jan-07 A	24-Sep-07 A
VO2610	Site visit	1d	24-Sep-07 A	24-Sep-07 A
VO143 St Andrew Square Island Platform (Not tie approved)		186d	06-Dec-06 A	31-Aug-07 A
VO2450	Track	72d	06-Dec-06 A	30-Mar-07 A

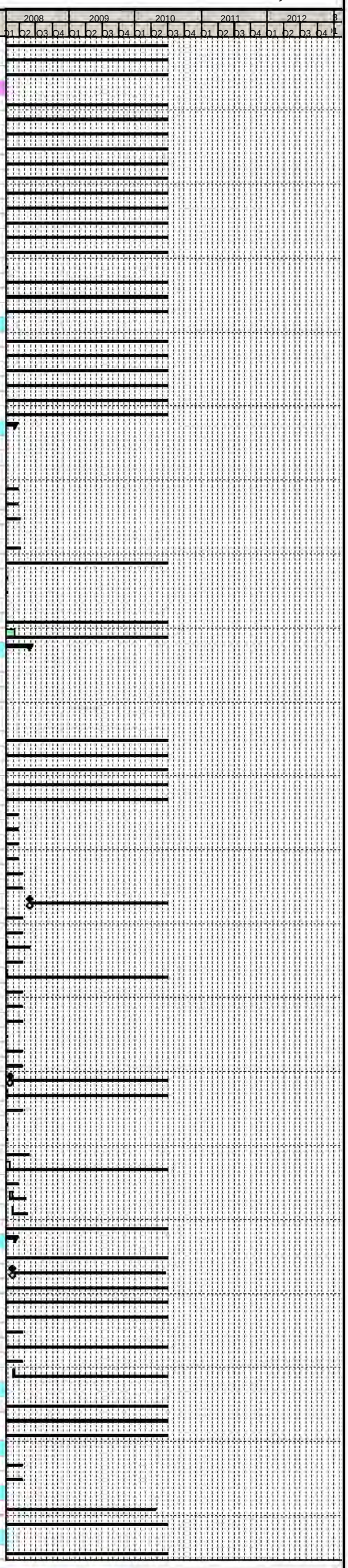

Primary Baseline
Actual Work
Remaining Work
Critical Remaining Work
Baseline Milestone
Milestone

Trams for Edinburgh
...connecting our Capital

Edinburgh Tram Project

SDS FULL DESIGN PROGRAMME @ V26

tie

Activity ID	Activity Name	Original Duration	Start	Finish
VO2460	Tram stops	171d	06-Dec-06 A	31-Aug-07 A
VO2470	OLE	112d	06-Dec-06 A	04-Jun-07 A
VO2480	Trafffic/Junction Modelling	94d	06-Dec-06 A	04-May-07 A
VO2490	Runtime Simulation	112d	06-Dec-06 A	04-Jun-07 A
VO2500	TRO	112d	06-Dec-06 A	04-Jun-07 A
VO2510	Roads	149d	06-Dec-06 A	30-Jul-07 A
VO2520	Utilities	112d	06-Dec-06 A	04-Jun-07 A
VO2530	Urban Design	171d	06-Dec-06 A	31-Aug-07 A
VO2540	Environmental	20d	02-Jul-07 A	30-Jul-07 A
VO2550	Reporting and Review	20d	02-Jul-07 A	30-Jul-07 A
VO145 Princes Street Realignment		191d	06-Dec-06 A	07-Sep-07 A
VO2020	Track	49d	06-Dec-06 A	23-Feb-07 A
VO2030	Tram stops	112d	06-Dec-06 A	04-Jun-07 A
VO2040	Roads	149d	06-Dec-06 A	30-Jul-07 A
VO2050	Urban Design	171d	06-Dec-06 A	31-Aug-07 A
VO2060	OLE	112d	06-Dec-06 A	04-Jun-07 A
VO2070	Trafffic/Junction Modelling	94d	06-Dec-06 A	04-May-07 A
VO2080	Runtime Simulation	112d	06-Dec-06 A	04-Jun-07 A
VO2090	TRO	112d	06-Dec-06 A	04-Jun-07 A
VO2100	Utilities	5d	06-Dec-06 A	12-Dec-06 A
VO2110	Reporting and Review	5d	03-Sep-07 A	07-Sep-07 A
VO146 Picardy Place Concept Revision (Not tie approved)		236d	06-Dec-06 A	09-Nov-07 A
VO1870	Track	218d	06-Dec-06 A	09-Nov-07 A
VO1880	Tram stops	171d	06-Dec-06 A	31-Aug-07 A
VO1890	OLE	112d	06-Dec-06 A	04-Jun-07 A
VO1900	Trafffic/Junction Modelling	94d	06-Dec-06 A	04-May-07 A
VO1910	Runtime Simulation	112d	06-Dec-06 A	04-Jun-07 A
VO1920	TRO	112d	06-Dec-06 A	04-Jun-07 A
VO1930	Roads	149d	06-Dec-06 A	30-Jul-07 A
VO1940	Utilities	5d	06-Dec-06 A	12-Dec-06 A
VO1950	Reporting and Review	5d	03-Sep-07 A	07-Sep-07 A
VO1970	Urban Design	171d	06-Dec-06 A	31-Aug-07 A
Utilities Section 1C1 (Excludes St.A Sq & Yk Place) Plates 32 to 38		378d	06-Mar-06 A	27-Aug-07 A
A11500	Close Out PD Issues & Propose Diversions	41d	29-Aug-06 A	27-Oct-06 A
A11510	Issue PD to SUCs	0d		27-Oct-06 A
A11520	Consult SUCs and MUDFA (at later stage - when appointed)	58d	23-Oct-06 A	24-Jan-07 A
A11530	Access to MUDFA	0d		23-Oct-06 A
A11540	Issue For IDC	0d		24-Jan-07 A
A11550	IDC	10d	25-Jan-07 A	08-Feb-07 A
A11560	Issue to SUCs	0d		08-Feb-07 A
A11570	SUCs Approval	129d	08-Feb-07 A	27-Aug-07 A
UTIL050	Section 1C - Pre-Preliminary Design (Utilities)	69d	06-Mar-06 A	21-Jun-06 A
UTIL400	Issue to Statutory Utility Companies (SUCs)	0d		21-Jun-06 A
Utilities Section 1C2 (St.A Sq & Yk Place) Plates 39 to 46		378d	06-Mar-06 A	27-Aug-07 A
A12460	Close Out PD Issues & Propose Diversions	41d	29-Aug-06 A	27-Oct-06 A
A15000	Issue PD to SUCs	0d		27-Oct-06 A
A15010	Consult SUCs and MUDFA (at later stage - when appointed)	45d	10-Apr-07 A	18-Jun-07 A
A15020	Access to MUDFA	0d		23-Oct-06 A
A15030	Issue For IDC	0d		12-Jun-07 A
A15040	IDC	5d	13-Jun-07 A	20-Jun-07 A
A15050	Issue to SUCs	0d		29-Jun-07 A
A15060	SUCs Approval	38d	29-Jun-07 A	27-Aug-07 A
UTIL180	Section 1C - Pre-Preliminary Design (Utilities)	69d	06-Mar-06 A	21-Jun-06 A
UTIL410	Issue to Statutory Utility Companies (SUCs)	0d		21-Jun-06 A
TRO's (Task300.4.6)		490d	03-Jul-06 A	05-Jun-08
SDS33170	Collate Exisiting TROs	8d	03-Jul-06 A	12-Jul-06 A
SDS33180	Receive Preliminary Roads Design	0d		12-Jul-06 A
SDS81950	Interim TRO Design Section 1C	5d	28-Jan-08*	01-Feb-08
SDS81960	Final TRO Design Section 1C	5d	30-May-08	05-Jun-08
TTRO's (Task300.4.7)		177d	29-Aug-06 A	11-May-07 A
TTRO240	SDS Produce Affected Roads Listing For MUDFA Works	64d	29-Aug-06 A	30-Nov-06 A
TTRO290	SDS Produce Affected Roads Listing For INFRACO Works	36d	12-Mar-07 A	04-May-07 A
TTRO550	Issue Affected Roads Listing For MUDFA Works To Dundas & Wilson Section 1C	0d		30-Nov-06 A
TTRO560	Dundas & Wilson Draft TTRO Schedule For MUDFA Works	0d	01-Dec-06 A	01-Dec-06 A
TTRO660	Issue Affected Roads Listing For INFRACO Works To Dundas & Wilson Section 1C	0d		04-May-07 A
TTRO690	Dundas & Wilson Draft TTRO Schedule For INFRACO Works	5d	04-May-07 A	11-May-07 A
PSW - SAS		986d	19-Sep-05 A	28-Jul-09
CON-0100	Requirements Definition (Contract Dates)	62d	19-Sep-05 A	19-Dec-05 A
Tram Stop St. Andrew Square (Task300.4.8)		799d	07-Jun-06 A	28-Jul-09
A25040	Prepare Tram Stop Planning Submission Drawings for Issue to Planning Drawing Team	23d	03-Dec-07 A	11-Jan-08 A
A25050	Produce Engineering Detailed Design Drawings	34d	06-Dec-07 A	01-Feb-08
A25220	Issue Notification Of Completion Letter- St Andrews Square Tram Stop Design to tie	0d		01-Feb-08
A25980	Tram Stop Design Complete - Drawings Issued for Construction	0d		28-Mar-08
A27450	Site Visit with tie & CEC To Review Preliminary Design	1d	06-Aug-07 A	06-Aug-07 A
A44720	Prepare Detailed Design Stop Drawings	253d	17-Nov-06 A	14-Dec-07 A
A47320	Produce As Built Drawings	200d	03-Oct-08	28-Jul-09
A47330	Receive Final As Built Data from the Contractor	0d		30-Jun-09
A47340	Receive First As Built Data from the Contractor	0d		01-Oct-08*
A47350	Issue Final As Built Drawings	0d		28-Jul-09
A4790	General Arrangement Drawings	12d	07-Jun-06 A	23-Jun-06 A
A5170	Issue Tram Stop GA Drawings for St Andrews Square	0d		30-Jun-06 A
SAS - PIP		986d	19-Sep-05 A	28-Jul-09
CON-0130	Requirements Definition (Contract Dates)	62d	19-Sep-05 A	19-Dec-05 A
Tram Stop Picardy Place (Task300.4.9)		831d	24-Apr-06 A	28-Jul-09
A25070	Prepare Tram Stop Planning Submission Drawings For Issue to Planning Drawing Team	27d	28-Nov-07 A	15-Jan-08
A25080	Produce Engineering Detailed Design Drawings	33d	03-Dec-07 A	28-Jan-08
A25250	Issue Notification Of Completion Letter- Picardy Place Tram Stop Design to tie	0d		28-Jan-08
A26010	Tram Stop Design Complete - Drawings Issued for Construction	0d		23-Apr-08
A27460	Site Visit with tie & CEC To Review Preliminary Design	1d	02-Jul-07 A	02-Jul-07 A
A44770	Prepare Detailed Design Stop Drawings	85d	31-Aug-07 A	14-Jan-08
A47360	Produce As Built Drawings	200d	03-Oct-08	28-Jul-09
A47370	Receive Final As Built Data from the Contractor	0d		30-Jun-09
A47380	Receive First As Built Data from the Contractor	0d		01-Oct-08*
A47390	Issue Final As Built Drawings	0d		28-Jul-09
A4800	General Arrangement Drawings	40d	24-Apr-06 A	23-Jun-06 A
A5180	Issue Tram Stop GA Drawings for Picardy Place	0d		30-Jun-06 A
Tram Cathedral Lane Substation(Task300.4.10)		426d	22-May-06 A	25-Jan-08
A548960	Preliminary Design of Substation	5d	22-May-06 A	26-May-06 A
A549220	Detailed Design Civils	240d	07-Dec-06 A	14-Dec-07 A
A549230	Detailed Architecture Design	166d	15-Sep-06 A	04-Jun-07 A
A549240	IDC on Detailed Design (Inc. Systems Assurance)	66d	26-Jan-07 A	08-May-07 A
A549250	Issue Notification Of Completion Letter- Tram Cathedral Lane Substation Planning Submission to tie for Approval	0d		12-Jul-07 A
A549290	Issue Tram Cathedral Lane Substation For Construction Drawings	0d		25-Jan-08*

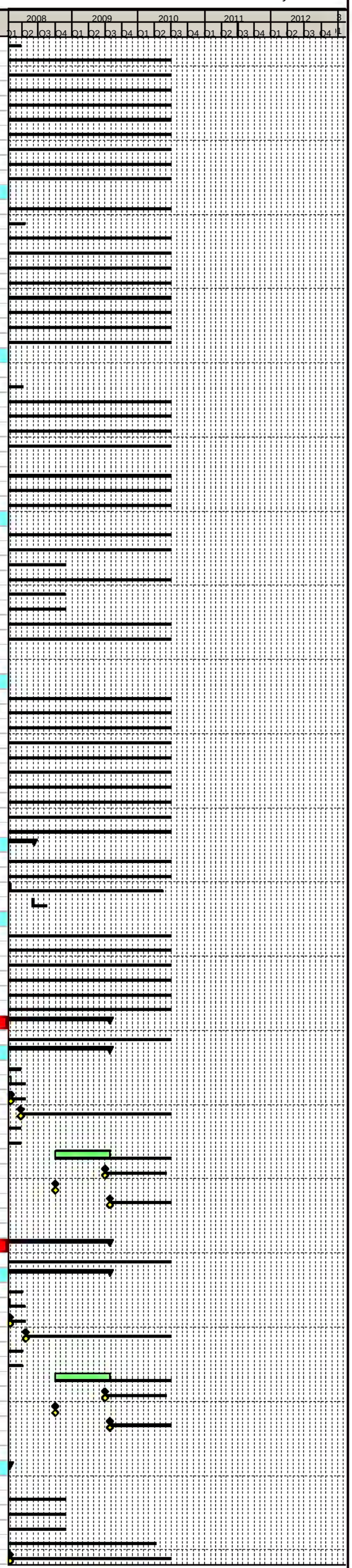

Primary Baseline
Actual Work
Remaining Work
Critical Remaining Work
Baseline Milestone
Milestone

Trams for Edinburgh ..connecting our Capital

Edinburgh Tram Project

SDS FULL DESIGN PROGRAMME @ V26

tie

Activity ID	Activity Name	Original Duration	Start	Finish
A549640	Compile Substation Planning Submission	60d	28-May-07 A	27-Aug-07 A
A550040	Substation Consultation Period	28d	19-Jun-06 A	27-Jul-06 A
A550160	Issue of Cathedral Substation Design	0d		30-Jun-06 A
SDS68710	Compile Detailed Engineering Drawings Submission	32d	30-Oct-07 A	14-Dec-07 A
SDS68720	Issue Notification Of Completion Letter- Tram Cathedral Lane Substation Detailed Engineering Drawings To tie	0d		17-Dec-07 A
VO176 Cathedral Substation Revision		128d	06-Feb-07 A	02-Aug-07 A
SDS73500	Revision of Cathedral Substation Design	116d	06-Feb-07 A	02-Aug-07 A
PIP - MDR		986d	19-Sep-05 A	28-Jul-09
CON-0160	Requirements Definition (Contract Dates)	62d	19-Sep-05 A	19-Dec-05 A
Tram Stop McDonald Road (Task300.4.11)		804d	31-May-06 A	28-Jul-09
A25260	Prepare Tram Stop Planning Submission Drawings For Issue to Planning Drawing Team	38d	11-Jun-07 A	03-Aug-07 A
A25270	Produce Engineering Detailed Design Drawings	89d	02-Jul-07 A	12-Nov-07 A
A25300	Issue Notification Of Completion Letter- McDonald Road Tram Stop Design to tie	0d		12-Nov-07 A
A26040	Tram Stop Design Complete - Drawings Issued for Construction	0d		14-Mar-08
A27470	Site Visit with tie & CEC To Review Preliminary Design	1d	02-Jul-07 A	02-Jul-07 A
A44780	Prepare Detailed Design Stop Drawings	101d	26-Sep-06 A	02-Mar-07 A
A47400	Produce As Built Drawings	200d	03-Oct-08	28-Jul-09
A47410	Receive Final As Built Data from the Contractor	0d		30-Jun-09
A47420	Receive First As Built Data from the Contractor	0d		01-Oct-08*
A47430	Issue Final As Built Drawings	0d		28-Jul-09
A4810	General Arrangement Drawings	17d	31-May-06 A	23-Jun-06 A
A5190	Issue Tram Stop GA Drawings for McDonald Road	0d		30-Jun-06 A
HAY - PSW - Section 1D (Task300.5)		986d	19-Sep-05 A	28-Jul-09
Sub Section Wide		595d	30-Jan-06 A	29-May-08
Sub Section Wide IDC		43d	03-Dec-07 A	08-Feb-08
A40241	Subsection Wide IDC	41d	03-Dec-07 A	08-Feb-08
Consents & Approvals		185d	27-Aug-07 A	21-May-08
Prior Approvals		168d	27-Aug-07 A	29-Apr-08
Combined Section Prior Approval		40d	29-Feb-08	25-Apr-08
A25290	Issue Combined Package 1D for Prior Approval to CEC	0d		29-Feb-08
A25330	Receive Combined Package 1D Comments From CEC	0d		25-Apr-08
A25340	Prior Approval Granted for Section 1D Combined Package	0d		25-Apr-08
A40250	CEC Approval Period - 1D Combined Package	38d	29-Feb-08	25-Apr-08
Batch 1/16		52d	15-Feb-08	29-Apr-08
SDS78500	Batch 1/16 Formal Approval Period	38d	29-Feb-08	28-Apr-08
SDS78510	Issue Batch 1/16 For Approval to CEC	0d	29-Feb-08	
SDS78520	Receive CEC Prior Approval For Batch 1/16	0d	29-Apr-08	
SDS78550	Batch 1/16 Princes Street Tramstop - Collation of Planning Drawings	9d	15-Feb-08*	28-Feb-08
Batch 1/17		52d	16-Jan-08	28-Mar-08
SDS78560	Batch 1/17 Formal Approval Period	38d	30-Jan-08	27-Mar-08
SDS78570	Issue Batch 1/17 For Approval to CEC	0d	30-Jan-08	
SDS78580	Receive CEC Prior Approval For Batch 1/17	0d	28-Mar-08	
SDS78610	Batch 1/17 Shandwick Place Tramstop - Collation of Planning Drawings	9d	16-Jan-08*	29-Jan-08
Roads, Track, OLE, Landscaping, Street Lighting		39d	27-Aug-07 A	19-Oct-07 A
SDS26170	Informal Consultation With CEC & tie Over Prior Approval for Roads, Track, OLE, Landscaping and Street Lighting	37d	27-Aug-07 A	19-Oct-07 A
Tram Stop Shandwick Place		113d	27-Aug-07 A	11-Feb-08
A40350	Informal Consultation With CEC & tie over Prior Approval Tram Stop Shandwick Place	107d	27-Aug-07 A	11-Feb-08
Tram Stop Princes Street		113d	04-Sep-07 A	18-Feb-08
A40380	Informal Consultation With CEC & tie over Prior Approval Tram Stop Princes Street West	107d	04-Sep-07 A	18-Feb-08
Technical Approvals		136d	05-Nov-07 A	21-May-08
Roads inc Drainage Technical Approval		136d	05-Nov-07 A	21-May-08
SDS26180	Issue Roads Design to Roads Authority for Approval	0d		22-Feb-08
SDS26190	Roads Authority Approval Period	38d	25-Feb-08	22-Apr-08
SDS26200	Receive Roads Authority Comments	0d		22-Apr-08
SDS26210	Update to Roads Authority Comments	19d	23-Apr-08	21-May-08
SDS26220	Roads Authority Informal Consultation	69d	05-Nov-07 A	22-Feb-08
SDS26290	Roads Technical Approval Granted	0d		21-May-08
Design Assurance Review		10d	11-Feb-08	22-Feb-08
SDS67940	Produce Design Assurance Statement	9d	11-Feb-08	22-Feb-08
VO37 Haymarket Charette Changes		91d	01-Aug-06 A	06-Dec-06 A
Optioneering		30d	14-Aug-06 A	25-Sep-06 A
A6460	Receive Notice to Proceed from Client	0d	25-Sep-06 A	
A6470	Exploratory Assessment	4d	14-Aug-06 A	17-Aug-06 A
A6480	2-Hour Meeting With CEC	0d	25-Sep-06 A	
Feasibility (2 Designs)		47d	01-Aug-06 A	05-Oct-06 A
A13890	Track Feasibility Assessment	9d	01-Aug-06 A	14-Aug-06 A
A6490	Roads Feasibility Assessment	15d	04-Sep-06 A	25-Sep-06 A
A6500	2-Hour Meeting With CEC - Update	0d	28-Sep-06 A	
A6510	Feasibility Statement Assessment (Not Full Report)	5d	28-Sep-06 A	04-Oct-06 A
A6520	Feasibility Drawings (With Statement Assessment)	5d	28-Sep-06 A	04-Oct-06 A
A6530	With CEC For Approval	0d	05-Oct-06 A	
Preliminary Design (1 Design)		44d	05-Oct-06 A	06-Dec-06 A
A12160	Utilities Design Update	2d	16-Nov-06 A	17-Nov-06 A
A12190	TTROs report and plans (Not Required)	2d	16-Nov-06 A	17-Nov-06 A
A12240	4-hour Meeting With CEC for Approval	0d	06-Dec-06 A	
A13980	Preliminary Track Design	5d	16-Oct-06 A	20-Oct-06 A
A13990	Integration With OLE Design	21d	26-Oct-06 A	24-Nov-06 A
A6540	Preliminary Road Design	25d	05-Oct-06 A	10-Nov-06 A
A6550	Preliminary Junction Design	23d	17-Oct-06 A	17-Nov-06 A
A6560	Integration With Traffic Modelling	4d	13-Nov-06 A	17-Nov-06 A
A6890	Roads Technical Design Statement (Not Required)	22d	18-Oct-06 A	17-Nov-06 A
A6950	TRO Schedules & Plans (Not Required)	2d	16-Nov-06 A	17-Nov-06 A
Track (Task300.5.1)		516d	30-Jan-06 A	08-Feb-08
A2600	First Pass Mx Horizontal and Vertical Alignment	75d	30-Jan-06 A	24-May-06 A
A2610	Handover Alignment Design P Way to Roads	0d		19-Jun-06 A
A2620	Coordination Meeting/Workshop Between PWay/Roads & Resolution of Major Conflicts	1d	25-May-06 A	25-May-06 A
SDS25890	Revise Alignment to Match Roads First Pass Vertical	6d	23-Aug-07 A	31-Aug-07 A
SDS25940	Handover Alignment Design Track to Roads	0d		31-Aug-07 A
SDS26310	Revise Alignment to Inc. Preliminary Design Comments	5d	08-Jan-07 A	12-Jan-07 A
SDS26330	Handover Alignment Design Track to Roads	0d		12-Jan-07 A
SDS57040	Issue Notification Of Completion Letter - Track Alignment Design to tie Section 1D	0d		14-Sep-07 A
SDS63580	Trial Planning Submission For Haymarket Stop & Adv Wks	5d	01-Aug-06 A	07-Aug-06 A
SDS67800	Advanced Work on Detailed Design Alignment	9d	04-Sep-06 A	15-Sep-06 A
SDS69930	Revise Alignment to Inc. Preliminary Design Comments	110d	09-Feb-07 A	27-Jul-07 A
SDS69940	Handover Alignment Design Track to Roads	0d		27-Jul-07 A
SDS69950	Final Alignment to Match Roads & Check	3d	10-Sep-07 A	12-Sep-07 A
SDS79290	Address tie Comments, Other Revisions, IDC & Section Submission Package	94d	14-Sep-07 A	08-Feb-08
VO144 Shandwick Place Changes		201d	06-Dec-06 A	21-Sep-07 A
VO2150	Track	89d	06-Dec-06 A	27-Apr-07 A
VO2160	Tram stops	171d	06-Dec-06 A	31-Aug-07 A
VO2170	OLE	112d	06-Dec-06 A	04-Jun-07 A
VO2180	Trafffic/Junction Modelling	94d	06-Dec-06 A	04-May-07 A
VO2190	Runtime Simulation	112d	06-Dec-06 A	04-Jun-07 A

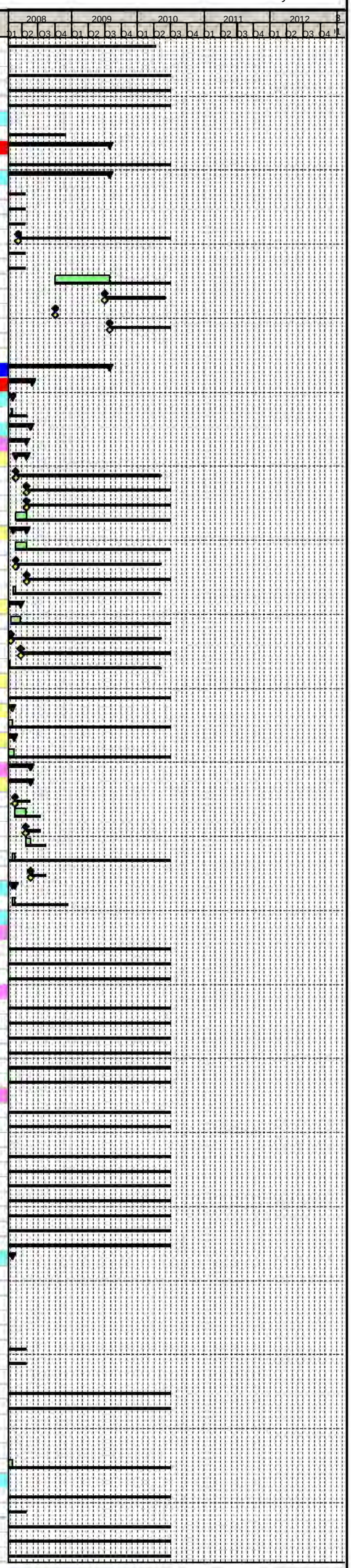

Primary Baseline
Actual Work
Remaining Work
Critical Remaining Work
Baseline Milestone
Milestone

Trams for Edinburgh
connecting our Capital

Edinburgh Tram Project

SDS FULL DESIGN PROGRAMME @ V26

tie

Activity ID	Activity Name	Original Duration	Start	Finish
VO2200	TRO	112d	06-Dec-06 A	04-Jun-07 A
VO2210	Roads	149d	06-Dec-06 A	30-Jul-07 A
VO2220	Utilities	5d	06-Dec-06 A	12-Dec-06 A
VO2230	Urban Design	171d	06-Dec-06 A	31-Aug-07 A
VO2240	Reporting and Review	5d	17-Sep-07 A	21-Sep-07 A
VO2280	Environmental	20d	02-Jul-07 A	30-Jul-07 A
Roads, Street Lighting & Landscaping (Task300.5.2)		574d	20-Feb-06 A	21-May-08
A2630	Route Appreciation/Junct Layout & Determine with tie & CEC Works Extent	51d	20-Feb-06 A	09-May-06 A
A2640	Frontage Surveys	30d	07-Mar-06 A	21-Apr-06 A
A2650	Set Up Mx Models	35d	28-Feb-06 A	21-Apr-06 A
A2660	Produce Preliminary Horizontal Road Alignment Design (Inc Lanes & Parking Zones)	16d	10-May-06 A	02-Jun-06 A
A2670	Preliminary Rd Junction Configuration Design	10d	05-Jun-06 A	19-Jun-06 A
A2680	Preliminary Road Safety Audit	2d	29-Jun-06 A	30-Jun-06 A
A2690	Review & Amend TRO Drawings & Schedules for Modifications Required Post Prelim Design	3d	12-Jun-06 A	14-Jun-06 A
A2700	Handover Alignment Design Roads to Pway	0d		29-Jun-06 A
A2710	Coordination Meeting/Workshop Between Roads & Pway Teams	1d	29-Jun-06 A	29-Jun-06 A
A5480	Undertake Road Marking, Pedestrian Req & Traffic Signalling Design	8d	08-Jun-06 A	19-Jun-06 A
SDS25900	Produce First Pass Vertical Alignment	9d	09-Aug-07 A	22-Aug-07 A
SDS25920	Handover Alignment Design Roads to Pway	0d		22-Aug-07 A
SDS25950	Revise Vertical Alignment to Match Final Track Alignment	12d	24-Aug-07 A	12-Sep-07 A
SDS25960	Horizontal & Vertical Alignment Design Complete	0d		12-Sep-07 A
SDS25970	Issue Notification Of Completion Letter- Roads Design to tie for Approval Section 1D	0d		16-Nov-07 A
SDS25980	Cross Check all Horizontal Design Aspects With Vertical Alignment	2d	24-Sep-07 A	25-Sep-07 A
SDS26020	Issue Construction Drawings	0d		21-May-08
SDS26030	Road Safety Audit Stage 2 (Intermediate)	6d	26-Sep-07 A	03-Oct-07 A
SDS26040	Insert Intermediate RSA Comments	5d	04-Oct-07 A	10-Oct-07 A
SDS26050	Produce Site Clearance Drawings & Schedule	33d	09-Aug-07 A	27-Sep-07 A
SDS26060	Produce Fencing, Barriers & Guardrails Design	33d	09-Aug-07 A	27-Sep-07 A
SDS26070	Produce Street Lighting Design (& Liaise With OLE)	180d	01-Feb-07 A	02-Nov-07 A
SDS26080	Produce Traffic Signal Only Ducting	24d	22-Aug-07 A	27-Sep-07 A
SDS26090	Produce Soft Landscaping Design	30d	12-Sep-07 A	25-Oct-07 A
SDS26100	Produce Traffic Signals Layout	33d	09-Aug-07 A	27-Sep-07 A
SDS26110	Produce Traffic Signs Design (Signs, Markings, Signals)	33d	09-Aug-07 A	27-Sep-07 A
SDS26120	Produce Earthworks Design	4d	30-Jul-07 A	02-Aug-07 A
SDS26340	Revise Alignment to Inc. Final Track Horizontal Alignment (Horizontal Design Freeze)	66d	30-Apr-07 A	08-Aug-07 A
SDS26350	Produce Kerbs, Footway & Paved Area Design	33d	09-Aug-07 A	27-Sep-07 A
SDS26360	Produce Pavement Design	13d	10-Sep-07 A	27-Sep-07 A
SDS56290	Issue Notification Of Completion Letter- Hard Landscaping Design to tie Section 1D	0d		07-Dec-07 A
SDS56770	Issue Notification Of Completion Letter- Street Lighting Design (Inc. Any OLE Combined Pole Design) to tie Section 1D	0d		31-Oct-07 A
SDS59320	Compile Planning Drawings	4d	16-Oct-07 A	19-Oct-07 A
SDS59630	Advise Track, Stops, Modellers Changes To Accom RSA1 & PD Comments	26d	23-Apr-07 A	01-Jun-07 A
SDS59640	Pass Guidance/Envelope To Track & Others As Necessary	0d		01-Jun-07 A
SDS67260	Street Lighting Survey Work	5d	05-Dec-06 A	11-Dec-06 A
SDS69650	Produce Hard Landscaping Design	117d	15-Jun-07 A	07-Dec-07 A
SDS69960	Resolution of Red Issues (tie Approval)	0d	12-Jul-07 A	
SDS79960	Final RSA	9d	04-Feb-08	15-Feb-08
SDS79970	Incorporate Final RSA Comments	5d	18-Feb-08	22-Feb-08
Drainage		254d	12-Mar-07 A	10-Mar-08
SDS71270	Hydraulic Modelling & First Pass Drainage Design	127d	12-Mar-07 A	21-Sep-07 A
SDS71280	Receipt of Drainage Survey Information	0d		25-Feb-08*
SDS71290	Outfall Consent/Approval from SW (NOT REQUIRED)	0d		30-Jul-07 A
SDS71300	Outfall Consent/Approval from CEC (NOT REQUIRED)	0d		30-Jul-07 A
SDS71310	Outfall Consent/Approval from SEPA	0d		07-May-07 A
SDS71330	Issue Drainage Design Completion Letter to tie for Approval Section 1D ISSUED WITH 1D ROADS	0d		16-Nov-07 A
SDS73200	Detailed Drainage Design and Review of Hydraulic Modelling	20d	24-Aug-07 A	24-Sep-07 A
SDS80710	Final Detailed Drainage Design	11d	22-Oct-07 A	06-Nov-07 A
SDS80720	Confirm Drainage and amend if necessary	9d	26-Feb-08	10-Mar-08
Traffic Modelling		27d	19-Jun-06 A	26-Jul-06 A
SDS56080	JRC Receive Junction Layouts	0d		19-Jun-06 A
SDS56090	JRC Prepare VISSIM Initial Traffic Flows (Low Level Model)	16d	20-Jun-06 A	12-Jul-06 A
SDS56100	SDS Produce LINSIG/TRANSYT Assessments (Iteration 1)	9d	13-Jul-06 A	26-Jul-06 A
VO180 Lothian Road Junction (not tie approved)		10d	06-Jul-07 A	19-Jul-07 A
SDS73510	Receive Change Order from tie	0d	06-Jul-07 A	
SDS73520	Assess and Revise Roads design for Lothian Road Junction	9d	06-Jul-07 A	19-Jul-07 A
SDS73530	Co-ordinate with Track Design	5d	13-Jul-07 A	19-Jul-07 A
SDS73540	Approval for Lothian Road Junction from Roads Design Working Group	0d		12-Jul-07 A
VO258 Torphican Street Conversion (Not Approved)		71d	16-Oct-07 A	01-Feb-08
SDS80860	Additional Roads Design	15d	16-Oct-07 A	06-Nov-07 A
SDS80870	Additional Lighting Design	14d	14-Jan-08*	01-Feb-08
SDS80880	Issue Notification Of Completion Letter- Street Lighting Torphican Street Design to tie	0d		01-Feb-08
Boundary & Accomodation Works (Task300.5.4)		208d	16-Apr-07 A	08-Feb-08
SDS41950	Detailed Design of Boundary & Accomodation Works	99d	16-Apr-07 A	13-Sep-07 A
SDS41960	Issue Notification Of Completion Letter- Detailed Design of Boundary & Accomodation Works Section 1D	0d		14-Sep-07 A
SDS81190	Additional Boundary and Accommodation Works and review	53d	14-Nov-07 A	08-Feb-08
Utilities Plates 47 to 56		378d	06-Mar-06 A	27-Aug-07 A
A11630	Close Out PD Issues & Propose Diversions	52d	29-Aug-06 A	13-Nov-06 A
A11640	Issue PD to SUCs	0d		16-Oct-06 A
A11650	Consult SUCs and MUDFA	136d	30-Jan-07 A	27-Aug-07 A
A11660	Access to MUDFA	0d		23-Oct-06 A
UTIL060	Section 1D - Pre-Preliminary Design (Utilities)	46d	06-Mar-06 A	16-May-06 A
UTIL500	Issue to Statutory Utility Companies (SUCs)	0d		16-May-06 A
TRO's		527d	04-May-06 A	29-May-08
SDS33230	Collate Exisiting TROs	46d	04-May-06 A	12-Jul-06 A
SDS33240	Receive Preliminary Roads Design	0d		12-Jul-06 A
SDS81970	Interim TRO Design Section 1D	5d	28-Jan-08*	01-Feb-08
SDS81980	Final TRO Design Section 1D	5d	22-May-08	29-May-08
TTRO's		177d	29-Aug-06 A	11-May-07 A
TTRO260	SDS Produce Affected Roads Listing For MUDFA Works	64d	29-Aug-06 A	30-Nov-06 A
TTRO310	SDS Produce Affected Roads Listing For INFRACO Works	36d	12-Mar-07 A	04-May-07 A
TTRO590	Issue Affected Roads Listing For MUDFA Works To Dundas & Wilson Section 1D	0d		30-Nov-06 A
TTRO600	Dundas & Wilson Draft TTRO Schedule For MUDFA Works	0d	01-Dec-06 A	01-Dec-06 A
TTRO700	Issue Affected Roads Listing For INFRACO Works To Dundas & Wilson Section 1D	0d		04-May-07 A
TTRO730	Dundas & Wilson Draft TTRO Schedule For INFRACO Works	5d	04-May-07 A	11-May-07 A
HAY - SHP		986d	19-Sep-05 A	28-Jul-09
CON-0040	Requirements Definition (Contract Dates)	62d	19-Sep-05 A	19-Dec-05 A
Tram Stop Shandwick Place (Task300.5.8)		831d	24-Apr-06 A	28-Jul-09
A25310	Prepare Tram Stop Planning Submission Drawings For Issue to Planning Drawings Team	10d	03-Aug-07 A	17-Aug-07 A
A25320	Produce Engineering Detailed Design Drawings	53d	21-Sep-07 A	07-Dec-07 A
A25350	Issue Notification Of Completion Letter- Shandwick Place Tram Stop Design to tie	0d		13-Dec-07 A
A26070	Tram Stop Design Complete - Drawings Issued for Construction	0d		28-Mar-08
A26080	Alterations to Tram Stop due to Roads alterations	9d	14-Dec-07 A	04-Jan-08 A
A27480	Site Visit with tie & CEC To Review Preliminary Design	1d	02-Jul-07 A	02-Jul-07 A
A44790	Prepare Detailed Design Stop Drawings	88d	17-Nov-06 A	06-Apr-07 A

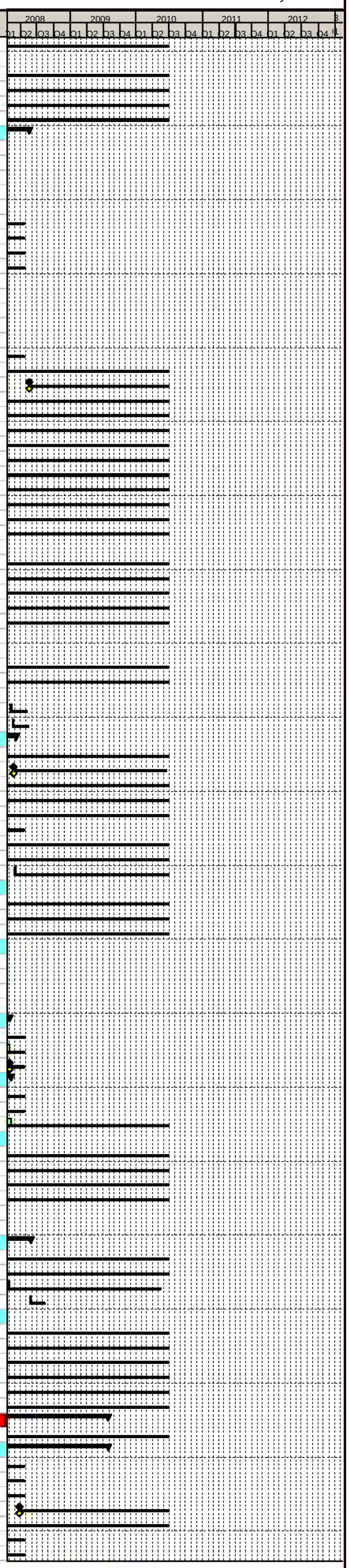

Primary Baseline
Actual Work
Remaining Work
Critical Remaining Work
Baseline Milestone
Milestone

Trams for Edinburgh ..connecting our Capital

Edinburgh Tram Project

SDS FULL DESIGN PROGRAMME @ V26

tie

Activity ID	Activity Name	Original Duration	Start	Finish
A47440	Produce As Built Drawings	200d	03-Oct-08	28-Jul-09
A47450	Receive Final As Built Data from the Contractor	0d		30-Jun-09
A47460	Receive First As Built Data from the Contractor	0d		01-Oct-08*
A47470	Issue Final As Built Drawings	0d		28-Jul-09
A4820	General Arrangement Drawings	45d	24-Apr-06 A	30-Jun-06 A
A5200	Issue Tram Stop GA Drawings for Shandwick Place	0d		30-Jun-06 A
SDS68280	Advanced Tram Stop Works For Planning	15d	26-Sep-06 A	17-Oct-06 A
SHP - PSW		986d	19-Sep-05 A	28-Jul-09
CON-0070	Requirements Definition (Contract Dates)	62d	19-Sep-05 A	19-Dec-05 A
Tram Stop Princes Street (Task300.5.9)		827d	28-Apr-06 A	28-Jul-09
A25360	Prepare Tram Stop Planning Submission Drawings For Issue to Planning Drawings Team	59d	11-Sep-07 A	06-Dec-07 A
A25370	Produce Engineering Detailed Design Drawings	9d	22-Nov-07 A	05-Dec-07 A
A25400	Issue Notification Of Completion Letter- Princes Street Tram Stop Design to tie	0d		06-Dec-07 A
A26090	Alterations to Tram Stop due to Roads alterations	9d	14-Dec-07 A	04-Jan-08 A
A26100	Tram Stop Design Complete - Drawings Issued for Construction	0d		29-Apr-08
A27490	Site Visit with tie & CEC To Review Preliminary Design	1d	02-Jul-07 A	02-Jul-07 A
A27600	Moving Stop Position (Due to Charette Changes)	34d	30-Aug-06 A	18-Oct-06 A
A44800	Prepare Detailed Design Stop Drawings	5d	26-Feb-07 A	02-Mar-07 A
A47480	Produce As Built Drawings	200d	03-Oct-08	28-Jul-09
A47490	Receive Final As Built Data from the Contractor	0d		30-Jun-09
A47500	Receive First As Built Data from the Contractor	0d		01-Oct-08*
A47510	Issue Final As Built Drawings	0d		28-Jul-09
A4830	General Arrangement Drawings	41d	28-Apr-06 A	30-Jun-06 A
A5340	Issue Tram Stop GA Drawings for Princes Street West	0d		30-Jun-06 A
Haymarket to Roseburn Junction - Section 2 (Task400)		986d	19-Sep-05 A	28-Jul-09
Section Wide - Section 2		328d	24-Apr-06 A	03-Aug-07 A
Section Wide		328d	24-Apr-06 A	03-Aug-07 A
Preliminary Design Approvals		105d	24-Apr-06 A	15-Sep-06 A
SDS23180	Track IDC	38d	03-Jul-06 A	25-Aug-06 A
SDS23200	Tramstops IDC	38d	03-Jul-06 A	25-Aug-06 A
SDS23210	Roads IDC	40d	03-Jul-06 A	31-Aug-06 A
SDS23220	Structures IDC	51d	03-Jul-06 A	15-Sep-06 A
SDS23230	Substation IDC	5d	01-Jun-06 A	07-Jun-06 A
SDS23850	Informal Consultation with tie	45d	24-Apr-06 A	30-Jun-06 A
SDS23860	tie approval	19d	30-Jun-06 A	27-Jul-06 A
SDS34520	PD - Submit Section 2 Substation Deliverables	0d		30-Jun-06 A
SDS34530	PD - Submit Section 2 Track Deliverables	0d		30-Jun-06 A
SDS34540	PD - Submit Section 2 Tramstops Deliverables	0d		30-Jun-06 A
SDS34550	PD - Submit Section 2 Roads Deliverables	0d		30-Jun-06 A
SDS34560	PD - Submit Section 2 Structures Deliverables	0d		30-Jun-06 A
SDS34570	PD - Section 2 Complete - Issue to tie	0d		30-Jun-06 A
Stakeholder Reviews		192d	24-Jul-06 A	26-Apr-07 A
A569670	Review Potential Issues with tie & Determine Consultation Strategy	5d	24-Jul-06 A	28-Jul-06 A
A569750	Review Potential Issues with tie & Determine Consultation Strategy	5d	07-Aug-06 A	11-Aug-06 A
A569760	Feedback to Design Teams for Study	43d	20-Feb-07 A	26-Apr-07 A
A569790	Wider Community Meeting	5d	20-Apr-07 A	26-Apr-07 A
SDS23250	Stakeholder Review	5d	31-Jul-06 A	04-Aug-06 A
OLE (Task400.1)		237d	29-Aug-06 A	03-Aug-07 A
SDS31290	Produce Final Detailed Layout Plans	201d	29-Aug-06 A	06-Jul-07 A
SDS55880	Issue Notification Of Completion Letter- Final Detailed Layout Plans & Standard & Special Cross Sections to tie Sec2	0d		03-Aug-07 A
SDS69440	SDM Design Interface Review Meetings	1d	01-Dec-06 A	02-Dec-06 A
HAY - ROJ - Section 2A (Task400.2)		986d	19-Sep-05 A	28-Jul-09
Sub Section Wide		585d	20-Feb-06 A	05-Jun-08
Sub Section Wide IDC		20d	04-Feb-08	29-Feb-08
A40311	Subsection Wide IDC	19d	04-Feb-08	29-Feb-08
Design Assurance Review		10d	03-Mar-08	14-Mar-08
SDS67950	Produce Section Wide Design Assurance Statement	9d	03-Mar-08	14-Mar-08
Consents & Approvals		387d	16-Nov-06 A	29-May-08
Prior Approvals		349d	16-Nov-06 A	08-Apr-08
Combined Section Prior Approval		40d	08-Feb-08	04-Apr-08
A25380	Issue Combined Package 2A for Prior Approval to CEC	0d		08-Feb-08
A25390	Receive Combined Package 2A Comments From CEC	0d		04-Apr-08
A25430	Prior Approval Granted for Section 2A Combined Package	0d		04-Apr-08
A40280	CEC Approval Period - 2A Combined Package	38d	08-Feb-08	04-Apr-08
Batch 2/01		47d	01-Feb-08	08-Apr-08
SDS78620	Batch 2/01 Formal Approval Period	38d	08-Feb-08	07-Apr-08
SDS78630	Issue Batch 2/01 For Approval to CEC	0d	08-Feb-08	
SDS78640	Receive CEC Prior Approval For Batch 2/01	0d	08-Apr-08	
SDS78670	Batch 2/01 Haymarket Tramstop - Collation of Planning Drawings	5d	01-Feb-08*	07-Feb-08
Batch 2/02		61d	03-Oct-07 A	04-Jan-08 A
SDS78680	Batch 2/02 Formal Approval Period	38d	02-Nov-07 A	04-Jan-08 A
SDS78690	Issue Batch 2/02 For Approval to CEC	0d	02-Nov-07 A	
SDS78700	Receive CEC Prior Approval For Batch 2/02	0d	24-Dec-07 A	
SDS78730	Batch 2/02 Haymarket Yards to Russell Road - Collation of Planning Drawings	22d	03-Oct-07 A	02-Nov-07 A
Batch 2/03		163d	13-Aug-07 A	08-Apr-08
SDS78740	Batch 2/03 Formal Approval Period	38d	08-Feb-08	07-Apr-08
SDS78750	Issue Batch 2/03 For Approval to CEC	0d	08-Feb-08	
SDS78760	Receive CEC Prior Approval For Batch 2/03	0d	08-Apr-08	
SDS78790	Batch 2/03 Russell Road Bridge - Collation of Planning Drawings	14d	18-Jan-08*	07-Feb-08
SDS79910	Russell Road Bridge Informal Consultation	38d	13-Aug-07 A	09-Oct-07 A
Batch 2/04 Russell Road TPH Substation		129d	12-Jan-07 A	11-Jul-07 A
A28070	Issue Russell Road TPH Substation Design for Prior Approval	0d		18-May-07 A
A28080	Prior Approval For Russell Road TPH Substation	0d		11-Jul-07 A
A28090	Receive Russell Road TPH Substation CEC Comments (No Comments)	0d		11-Jul-07 A
A41240	Informal Consultation With CEC & tie over Prior Approval Russell Road TPH Substation	82d	12-Jan-07 A	17-May-07 A
A41250	Batch 2/04 Formal Approval Period	36d	18-May-07 A	11-Jul-07 A
A44730	Incorporate Russell Road TPH Substation CEC Comments for Prior Approval (No Comments)	1d	11-Jul-07 A	11-Jul-07 A
Roads, Track, OLE, Landscaping, Street Lighting		40d	16-Jan-07 A	12-Mar-07 A
SDS26660	Informal Consultation With CEC & tie Over Prior Approval for Roads, Track, OLE, Landscaping and Street Lighting	38d	16-Jan-07 A	12-Mar-07 A
Tram Stop Haymarket		115d	16-Nov-06 A	04-May-07 A
A25440	Issue Tram Stop Haymarket Design for Prior Approval	0d		05-Feb-07 A
A40410	Informal Consultation With CEC & tie over Prior Approval Tram Stop Haymarket	48d	16-Nov-06 A	02-Feb-07 A
A40420	CEC Approval Period (Protocol Changed to Combined Section)	58d	06-Feb-07 A	04-May-07 A
Tram Haymarket Terrace 1 Sub Station		303d	30-Jan-07 A	08-Apr-08
A41160	Informal Consultation With CEC & tie over Prior Approval Tram Haymarket Terrace 1 Substation	228d	30-Jan-07 A	21-Jan-08
A41170	Prior Approval Tram Haymarket Terrace 1 Substation	0d		08-Apr-08
Haymarket Station Viaduct Superstructure		40d	14-Jan-08	07-Mar-08
141	Commence Haymarket Station Viaduct Superstructure Informal Consultation With CEC & tie Over Prior Approval	38d	14-Jan-08	07-Mar-08
Technical Approvals		351d	16-Jan-07 A	29-May-08
Russell Road Bridge Review Period (TAA)		159d	08-May-07 A	14-Dec-07 A
124	Issue Russell Road Bridge Design Package to TAA	0d	28-Sep-07 A	
125	TAA Russell Road Bridge Design Package Review Period	19d	28-Sep-07 A	25-Oct-07 A
126	Receive Russell Road Bridge Design Package comments from TAA	0d	13-Nov-07 A	

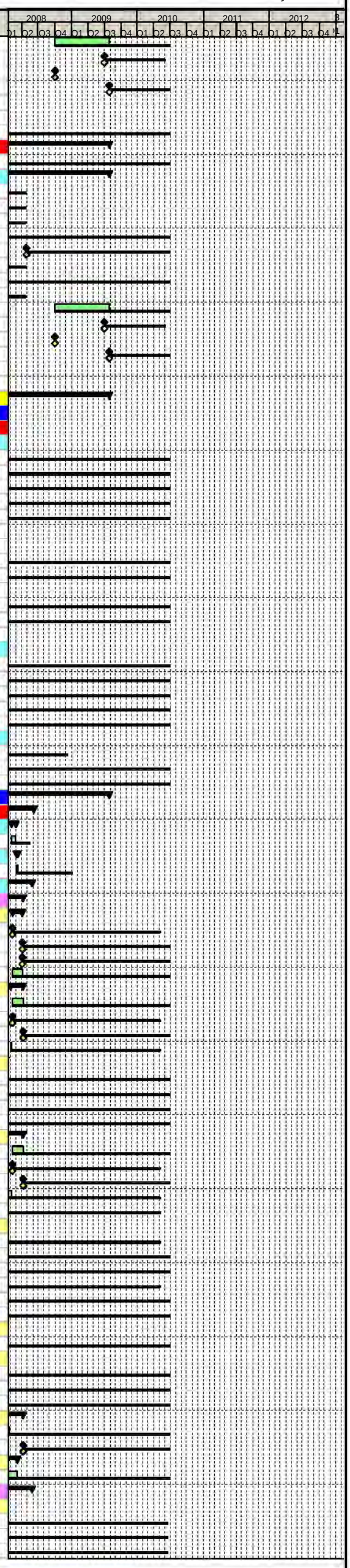

Primary Baseline
Actual Work
Remaining Work
Critical Remaining Work
Baseline Milestone
Milestone

Trams for Edinburgh
Connecting our Capital

Edinburgh Tram Project

SDS FULL DESIGN PROGRAMME @ V26

tie

Activity ID	Activity Name	Original Duration	Start	Finish
127	Incorporate TAA comments into Russell Road Bridge Design Package	22d	14-Nov-07 A	14-Dec-07 A
145	Commence Russell Road Bridge Informal Consultation With CEC Over Technical Approval	55d	08-May-07 A	30-Jul-07 A
Russell Road Bridge Review Period (Network Rail)		52d	06-Nov-07 A	25-Jan-08
129	Issue Design and Check Certificate to Network Rail For Comment	0d	06-Nov-07 A	
130	Network Rail Comment Period	19d	06-Nov-07 A	03-Dec-07 A
131	Receive Network Rail Comments	0d	14-Jan-08	
132	Incorporate Network Rail comments into Superstructure Design Package	9d	14-Jan-08	25-Jan-08
Haymarket Station Viaduct Review Period (TAA)		265d	01-Feb-07 A	15-Feb-08
20	Issue Haymarket Station Viaduct Superstructure Design Package to TAA	0d	30-Oct-07 A	
21	TAA Haymarket Station Viaduct Superstructure Design Package Review Period	38d	30-Oct-07 A	24-Dec-07 A
22	Receive Haymarket Station Viaduct Superstructure Design Package comments from TAA	0d	04-Feb-08*	
33	Incorporate TAA comments into Haymarket Station Viaduct Superstructure Design Package	9d	04-Feb-08	15-Feb-08
41	Commence Haymarket Station Viaduct Superstructure Informal Consultation With CEC Over Technical Approval	38d	01-Feb-07 A	28-Mar-07 A
Haymarket Station Viaduct Review Period (Network Rail & ScotRail)		30d	18-Feb-08	28-Mar-08
25	Issue Design and Check Certificate to Network Rail For Comment	0d	18-Feb-08	
27	Receive Network Rail Comments	0d	17-Mar-08	
28	Incorporate Network Rail & First Scot Rail comments into Superstructure Design Package	9d	17-Mar-08	28-Mar-08
36	Network Rail Comment Period	19d	18-Feb-08	14-Mar-08
Roads Technical Approval		351d	16-Jan-07 A	29-May-08
SDS26670	Issue Roads Design to Roads Authority for Approval	0d		29-Feb-08
SDS26680	Roads Authority Approval Period	38d	03-Mar-08	29-Apr-08
SDS26690	Receive Roads Authority Comments	0d		29-Apr-08
SDS26700	Update to Roads Authority Comments	19d	30-Apr-08	29-May-08
SDS26710	Roads Authority Informal Consultation	38d	16-Jan-07 A	12-Mar-07 A
SDS26780	Roads Technical Approval Granted	0d		29-May-08
Drainage Technical Approval		83d	14-Jan-08	07-May-08
SDS72300	Roads Authority Informal Consultation For Drainage	38d	14-Jan-08	07-Mar-08
SDS72310	Issue Drainage Design to Roads Authority for Approval	0d		29-Feb-08
SDS72320	Roads Authority Approval Period For Drainage	38d	03-Mar-08	29-Apr-08
SDS72330	Receive Roads Authority Comments For Drainage	0d		29-Apr-08
SDS72340	Update to Raods Authority Comments For Drainage	5d	30-Apr-08	07-May-08
SDS72350	Drainage Approval Granted	0d		07-May-08
Track (Task400.2.1)		511d	20-Feb-06 A	22-Feb-08
A2720	First Pass Mx Horizontal and Vertical Alignment	47d	20-Feb-06 A	04-May-06 A
A2730	Handover Alignment Design P Way to Roads	0d		04-May-06 A
A2740	Coordination Meeting/Workshop Between PWay/Roads & Resolution of Major Conflicts	1d	03-May-06 A	03-May-06 A
SDS26380	Revise Alignment to Match Roads First Pass Vertical	2d	05-Dec-06 A	06-Dec-06 A
SDS26430	Handover Alignment Design Track to Roads	0d		06-Dec-06 A
SDS26800	Revise Alignment to Inc. Preliminary Design Comments	82d	04-Jul-06 A	02-Nov-06 A
SDS26820	Handover Alignment Design Track to Roads	0d		02-Nov-06 A
SDS57050	Issue Track Alignment Design to tie Section 2A	0d		14-Dec-06 A
SDS57150	tie Approval Period	19d	15-Dec-06 A	19-Jan-07 A
SDS59550	IDC Track Design	5d	04-Dec-06 A	08-Dec-06 A
SDS60860	Revise Track Alignment to Inc. Modelling Changes	0d	20-Nov-06 A	20-Nov-06 A
SDS70580	Receive tie Comments	0d	05-Apr-07 A	
SDS70590	Address tie Comments, Other Revisions, IDC & Section Submission Package	129d	06-Aug-07 A	22-Feb-08
Roads, Street Lighting & Landscaping (Task400.2.2)		580d	20-Feb-06 A	29-May-08
A2750	Route Appreciation/Junct Layout & Determine with tie & CEC Works Extent	54d	20-Feb-06 A	15-May-06 A
A2760	Frontage Surveys	30d	07-Mar-06 A	21-Apr-06 A
A2770	Set Up Mx Models	32d	03-Mar-06 A	21-Apr-06 A
A2780	Produce Preliminary Horizontal Road Alignment Design (Inc Lanes & Parking Zones)	43d	09-Mar-06 A	16-May-06 A
A2790	Preliminary Road Safety Audit	1d	19-Jun-06 A	19-Jun-06 A
A2800	Review & Amend TRO Drawings & Schedules for Modifications Required Post Prelim Design	3d	12-Jun-06 A	14-Jun-06 A
A2810	Handover Alignment Design Roads to Pway	0d		20-Jun-06 A
A2820	Coordination Meeting/Workshop Between Roads & Pway Teams	1d	20-Jun-06 A	20-Jun-06 A
A5490	Undertake Road Marking, Pedestrian Req & Traffic Signalling Design	3d	22-May-06 A	24-May-06 A
SDS26390	Produce First Pass Vertical Alignment	7d	24-Nov-06 A	04-Dec-06 A
SDS26410	Handover Alignment Design Roads to Pway	0d		04-Dec-06 A
SDS26440	Revise Vertical Alignment to Match Final Track Alignment	8d	28-Nov-06 A	07-Dec-06 A
SDS26450	Horizontal & Vertical Alignment Design Complete	0d		11-Dec-06 A
SDS26460	Issue Roads Design to tie for Approval Section 2A	0d		30-Jan-07 A
SDS26470	Cross Check all Horizontal Design Aspects With Vertical Alignment	2d	03-Jan-07 A	04-Jan-07 A
SDS26480	tie Approval Period	19d	30-Jan-07 A	26-Feb-07 A
SDS26490	No tie Comments Received To Date - Change in Protocol Going Forward	0d		04-May-07 A
SDS26510	Issue Construction Drawings	0d		29-May-08
SDS26520	Road Safety Audit Stage 2 (Intermediate)	12d	04-Jan-07 A	22-Jan-07 A
SDS26530	Insert Intermediate RSA Comments	16d	23-Jan-07 A	14-Feb-07 A
SDS26540	Produce Site Clearance Drawings & Schedule	19d	15-Jan-07 A	09-Feb-07 A
SDS26550	Produce Fencing, Barriers & Guardrails Design	7d	11-Dec-06 A	19-Dec-06 A
SDS26560	Produce Street Lighting Design (& Liaise With OLE)	5d	04-Dec-06 A	08-Dec-06 A
SDS26570	Produce Traffic Signal Only Ducting	58d	15-Jan-07 A	12-Apr-07 A
SDS26580	Produce Soft Landscaping Design	33d	15-Jan-07 A	02-Mar-07 A
SDS26590	Produce Traffic Signals Layout	5d	11-Dec-06 A	15-Dec-06 A
SDS26600	Produce Traffic Signs Design (Signs, Markings, Signals)	9d	11-Dec-06 A	22-Dec-06 A
SDS26610	Produce Earthworks Design	233d	15-Jan-07 A	11-Jan-08 A
SDS26830	Revise Alignment to Inc. Final Track Horizontal Alignment (Horizontal Design Freeze) & Issue to Substn Designers	4d	03-Nov-06 A	08-Nov-06 A
SDS26840	Produce Kerbs, Footway & Paved Area Design	5d	11-Dec-06 A	15-Dec-06 A
SDS26850	Produce Pavement Design	129d	15-Jan-07 A	31-Jul-07 A
SDS26860	IDC (Inc. Systems Assurance)	21d	04-Jan-07 A	02-Feb-07 A
SDS56330	Issue Hard & Soft Landscaping Design to tie Section 2A	0d		27-Feb-07 A
SDS56780	Issue Street Lighting Design (Inc. Any OLE Combined Pole Design) to tie Section 2A	0d		30-Jan-07 A
SDS59330	Compile Planning Drawings	10d	16-Jan-07 A	30-Jan-07 A
SDS59710	Advise Track, Stops, Modellers Changes To Accom RSA1 & PD Comments	23d	02-Oct-06 A	03-Nov-06 A
SDS59720	Pass Guidance/Envelope To Track & Others As Necessary	0d		03-Nov-06 A
SDS60840	Revise Horizontal to Inc. Track Horizontal Alignment, RSA1 & PD Comments	16d	17-Oct-06 A	08-Nov-06 A
SDS60850	Revise Alignment to Inc. Minor Changes From Traffic Modelling	3d	16-Nov-06 A	20-Nov-06 A
SDS67270	Street Lighting Survey Work	43d	29-Aug-06 A	31-Oct-06 A
SDS69660	Produce Hard Landscaping Design	14d	09-Jan-07 A	30-Jan-07 A
SDS79980	Final RSA	9d	11-Feb-08	22-Feb-08
SDS79990	Incorporate Final RSA Comments	5d	25-Feb-08	29-Feb-08
Drainage		254d	12-Mar-07 A	10-Mar-08
SDS71370	Hydraulic Modelling & First Pass Drainage Design	90d	12-Mar-07 A	27-Jul-07 A
SDS71380	Receipt of Drainage Survey Information	0d	14-Jan-08*	
SDS71390	Outfall Consent/Approval from SW	0d		25-Feb-08*
SDS71400	Outfall Consent/Approval from CEC	0d		14-Jan-08*
SDS71410	Outfall Consent/Approval from SEPA	0d		10-May-07 A
SDS71420	Compile Drainage Package	5d	17-Sep-07 A	21-Sep-07 A
SDS71430	Issue Drainage Design Completion Letter to tie for Approval Section 2A	0d		27-Sep-07 A
SDS73210	Final Detailed Drainage Design	38d	20-Jul-07 A	14-Sep-07 A
SDS80360	Final Detailed Drainage Design	49d	13-Nov-07 A	31-Jan-08
SDS80370	Compile Drainage Package	2d	31-Jan-08	01-Feb-08
SDS80380	Issue Drainage Design Completion Letter to tie for Approval Section 2A	0d		01-Feb-08
SDS80390	Confirm Drainage and Amend if Required	9d	26-Feb-08	10-Mar-08

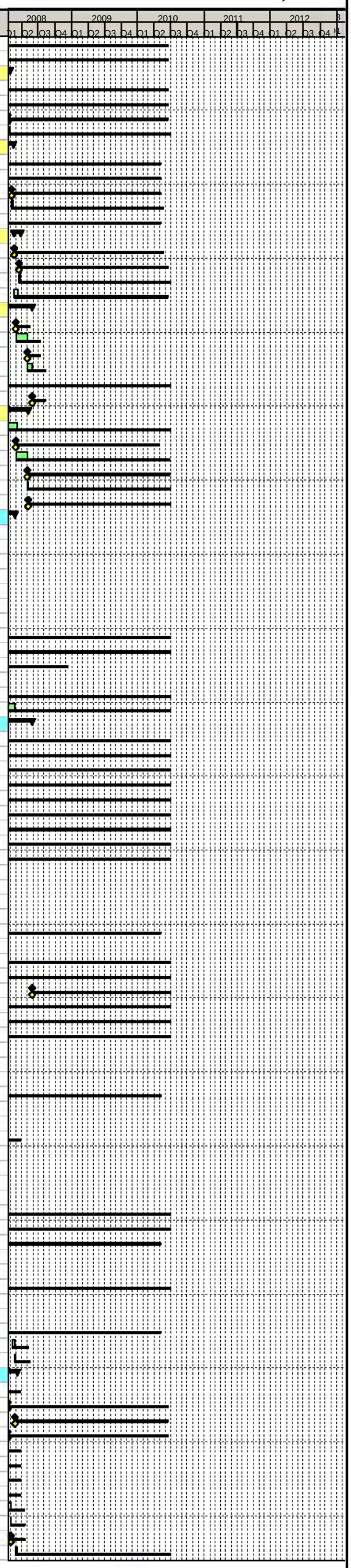

Primary Baseline
Actual Work
Remaining Work
Critical Remaining Work
Baseline Milestone
Milestone

Trams for Edinburgh
..connecting our Capital

Edinburgh Tram Project

SDS FULL DESIGN PROGRAMME @ V26

tie

Activity ID	Activity Name	Original Duration	Start	Finish
Boundary & Accomodation Works (Task400.2.3)		105d	26-Mar-07 A	17-Aug-07 A
SDS42010	Detailed Design of Boundary & Accomodation Works	95d	26-Mar-07 A	17-Aug-07 A
SDS42020	Issue Notification Of Completion Letter- Detailed Design of Boundary & Accomodation Works Section 2A	0d		17-Aug-07 A
Utilities (Task400.2.4)		483d	09-Mar-06 A	01-Feb-08
A12150	Close Out PD Issues and Re-issue PD Drawings to SUCs	32d	31-Jul-06 A	15-Sep-06 A
A12170	Design Development	326d	21-Aug-06 A	14-Jan-08
A12180	Access to MUDFA and Others	116d	03-Oct-06 A	02-Apr-07 A
A12220	SUC Approval Period	89d	12-Apr-07 A	27-Aug-07 A
A12280	Utilities Management	353d	31-Jul-06 A	01-Feb-08
SDS67070	Inital Consultations With SUCs and IDTs	38d	29-Aug-06 A	23-Oct-06 A
SDS67080	MUDFA Appointment	0d		03-Oct-06 A
SDS67090	Consult With SUCs on DD	116d	03-Oct-06 A	02-Apr-07 A
SDS67110	Issue DD to SUC For Approval	0d		12-Apr-07 A
SDS67140	IDC	7d	02-Apr-07 A	12-Apr-07 A
UTIL070	Section 2A - Pre-Preliminary Design (Utilities)	78d	09-Mar-06 A	07-Jul-06 A
UTIL600	Issue to Statutory Utility Companies (SUCs)	0d		07-Jul-06 A
TRO's (Task400.2.5)		555d	01-Apr-06 A	05-Jun-08
SDS33290	Collate Exisiting TROs	65d	01-Apr-06 A	12-Jul-06 A
SDS33300	Receive Preliminary Roads Design	0d		12-Jul-06 A
SDS81990	Interim TRO Design Section 2A	5d	28-Jan-08*	01-Feb-08
SDS82000	Final TRO Design Section 2A	5d	30-May-08	05-Jun-08
TTRO's (Task400.2.6)		177d	29-Aug-06 A	11-May-07 A
TTRO280	SDS Produce Affected Roads Listing For MUDFA Works	64d	29-Aug-06 A	30-Nov-06 A
TTRO330	SDS Produce Affected Roads Listing For INFRACO Works	36d	12-Mar-07 A	04-May-07 A
TTRO630	Issue Affected Roads Listing For MUDFA Works To Dundas & Wilson Section 2A	0d		30-Nov-06 A
TTRO640	Dundas & Wilson Draft TTRO Schedule For MUDFA Works	0d	01-Dec-06 A	01-Dec-06 A
TTRO740	Issue Affected Roads Listing For INFRACO Works To Dundas & Wilson Section 2A	0d		04-May-07 A
TTRO770	Dundas & Wilson Draft TTRO Schedule For INFRACO Works	5d	04-May-07 A	11-May-07 A
VO190 Crew Relief Facility		168d	01-Jun-07 A	31-Jan-08
A25970	Receive Change Order from tie for Crew Relief Facility	0d	01-Jun-07 A	
A25990	Design Crew Relief Facility and Step Reconfiguration	60d	22-Oct-07 A	25-Jan-08
A26000	Receive MH Survey Information	0d	22-Oct-07 A	
A26110	Issue Crew Relief Facility to tie	0d		31-Jan-08
HAY - ROJ		986d	19-Sep-05 A	28-Jul-09
CON-0370	Requirements Definition (Contract Dates)	62d	19-Sep-05 A	19-Dec-05 A
Tram Stop Haymarket (Task400.2.7)		831d	24-Apr-06 A	28-Jul-09
A25410	Prepare Tram Stop Planning Submission Drawings	54d	30-Aug-06 A	17-Nov-06 A
A25420	Produce Engineering Detailed Design Drawings	222d	06-Feb-07 A	17-Jan-08
A25450	Issue Notification Of Completion Letter- Haymarket Tram Stop Design to tie	0d		18-Jan-08*
A26130	Tram Stop Design Complete - Drawings Issued for Construction	0d		08-Apr-08
A27500	Site Visit with tie & CEC To Review Preliminary Design	1d	12-Jul-06 A	12-Jul-06 A
A43230	Issue Haymarket Tram Stop Package for Prior Approval to tie	0d		17-Nov-06 A
A43350	Update Planning Submission	9d	23-Jan-07 A	05-Feb-07 A
A43360	IDC Tram Stop Design for Planning Submission (Inc. Systems Asssurance)	9d	25-Aug-06 A	08-Sep-06 A
A43370	tie Approval Period	19d	17-Nov-06 A	14-Dec-06 A
A43380	Receive tie Comments	0d		23-Jan-07 A
A44810	Prepare Detailed Design Stop Drawings	78d	08-Aug-06 A	01-Dec-06 A
A45050	Revision of Detailed Design Tram Stop Planning Drawings due to VO190 for issue to Planning Drawing Team	19d	28-Aug-07 A	24-Sep-07 A
A47520	Produce As Built Drawings	200d	03-Oct-08	28-Jul-09
A47530	Receive Final As Built Data from the Contractor	0d		30-Jun-09
A47540	Receive First As Built Data from the Contractor	0d		01-Oct-08*
A47550	Issue Final As Built Drawings	0d		28-Jul-09
A4840	General Arrangement Drawings 2a	40d	24-Apr-06 A	23-Jun-06 A
A5350	Issue Tram Stop GA Drawings for Haymarket	0d		30-Jun-06 A
Structures		542d	20-Feb-06 A	08-Apr-08
S01 Russell Road Bridge		532d	06-Mar-06 A	08-Apr-08
SDS43200	Review of Previous Work	9d	06-Mar-06 A	17-Mar-06 A
SDS43210	Optioneering	14d	24-Apr-06 A	15-May-06 A
SDS43220	Initial Design	25d	16-May-06 A	22-Jun-06 A
SDS43230	Production of AIP Drawing	26d	16-May-06 A	23-Jun-06 A
SDS43240	Issue Russell Road Bridge AIP Drawing to tie	0d		30-Jun-06 A
SDS43250	Checking	19d	26-May-06 A	23-Jun-06 A
SDS43260	tie AIP Drawing Review Period	22d	14-Jul-06 A	15-Aug-06 A
SDS43270	Undertake Consultations	13d	26-May-06 A	15-Jun-06 A
SDS43280	Receive AIP Drawing Comments from tie	0d		15-Aug-06 A
SDS43290	Incorporate tie Comments into AIP Drawing	2d	14-Aug-06 A	15-Aug-06 A
SDS43300	Production of AIP Document	10d	16-Jun-06 A	30-Jun-06 A
SDS43310	Issue Russell Road Bridge AIP Document to tie	0d		14-Aug-06 A
SDS43320	tie AIP Document Review Period	2d	14-Aug-06 A	15-Aug-06 A
SDS43330	Receive AIP Document Comments from tie	0d		15-Aug-06 A
SDS43340	Incorporate tie Comments into AIP Document	2d	14-Aug-06 A	15-Aug-06 A
SDS43350	Issue AIP Document & Drawing to TAA	0d		15-Aug-06 A
SDS43360	TAA AIP Document & Drawing Review Period	8d	16-Aug-06 A	28-Aug-06 A
SDS43370	Issue AIP Document & Drawing to Planning Department	0d		11-Jul-06 A
SDS43380	Planning Department AIP Document & Drawing Review Period	32d	11-Jul-06 A	28-Aug-06 A
SDS43390	Recieve AIP Document & Drawing Comments from TAA	0d		23-Oct-06 A
SDS43400	Incorporate TAA Comments into AIP Document & Drawing	5d	23-Oct-06 A	27-Oct-06 A
SDS43410	Recieve AIP Document & Drawing Comments from Planning Department	0d		23-Oct-06 A
SDS43420	Incorporate Planning Department TAA Comments into AIP Document & Drawing	5d	23-Oct-06 A	27-Oct-06 A
SDS43430	Issue AIP Drawing & Document to Structures Detailed Design Team	0d		30-Oct-06 A
Preliminary Design Milestones		226d	09-Aug-06 A	02-Jul-07 A
107	Receipt of tie PD Acceptance	0d	09-Aug-06 A	
108	Receipt of Alignment Prelim Design Package	0d	23-Oct-06 A	
109	Receipt of OLE Prelim Design Package	0d	12-Feb-07 A	
110	Receipt of Ground Investigation Data & Interpretative Geotechnical Report	0d	02-Jul-07 A	
111	Receipt of an Approved and Signed AIP document	0d	23-Oct-06 A	
Superstructure Detailed Design		197d	18-Dec-06 A	28-Sep-07 A
113	Superstructure Detailed Design	28d	18-Dec-06 A	05-Feb-07 A
114	Superstructure Detailed Design Draughting	37d	03-Jan-07 A	26-Feb-07 A
115	Issue Superstructure Detailed Design Package to CAT II Checker	0d	27-Feb-07 A	
116	Superstructure CAT II Check	39d	27-Feb-07 A	27-Apr-07 A
117	Receive & Incorporate CAT II comments	50d	30-Apr-07 A	13-Jul-07 A
118	Issue Notification Of Completion Letter- Russell Road Bridge Superstructure Design Package to tie	0d	28-Sep-07 A	
Substructure Detailed Design		173d	30-Jan-07 A	28-Sep-07 A
135	Substructure Detailed Design	108d	30-Jan-07 A	13-Jul-07 A
136	Substructure Detailed Design Draughting	98d	13-Feb-07 A	13-Jul-07 A
137	Issue Substructure Detailed Design Package to CAT II Checker	0d	16-Jul-07 A	
138	Substructure CAT II Check	9d	16-Jul-07 A	27-Jul-07 A
139	Receive & Incorporate CAT II comments	31d	30-Jul-07 A	13-Sep-07 A
140	Issue Notification Of Completion Letter- Russell Road Bridge Substructure Design Package to tie	0d	28-Sep-07 A	
Russell Road Design Package For Construction / Fabrication		0d	08-Apr-08	08-Apr-08
SDS62440	Issue Russell Road Bridge Design Package For Construction/Fabrication	0d		08-Apr-08
S19 Haymarket Station Viaduct		542d	20-Feb-06 A	08-Apr-08

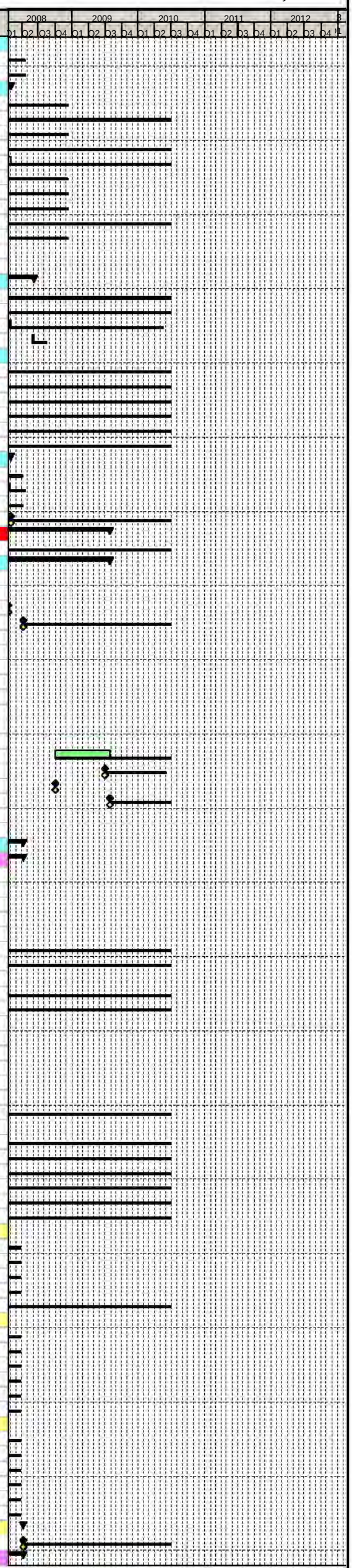

Primary Baseline
Actual Work
Remaining Work
Critical Remaining Work
Baseline Milestone
Milestone

Trams for Edinburgh
connecting our Capital

Edinburgh Tram Project

SDS FULL DESIGN PROGRAMME @ V26

tie

Activity ID	Activity Name	Original Duration	Start	Finish
SDS22150	Review of Previous Work	9d	20-Feb-06 A	03-Mar-06 A
SDS22190	Optioneering	14d	06-Mar-06 A	24-Mar-06 A
SDS22200	Initial Design	9d	27-Mar-06 A	07-Apr-06 A
SDS22210	Production of AIP Drawing	21d	03-Apr-06 A	05-May-06 A
SDS22220	Issue AIP Drawing to tie	0d		15-May-06 A
SDS22230	Checking	20d	10-Apr-06 A	11-May-06 A
SDS22240	tie AIP Drawing Review Period	30d	10-Apr-06 A	26-May-06 A
SDS22260	Undertake Consultations	21d	10-Apr-06 A	12-May-06 A
SDS22270	Receive AIP Drawing Comments from tie	0d		26-May-06 A
SDS22290	Incorporate tie Comments into AIP Drawing	14d	12-May-06 A	02-Jun-06 A
SDS22700	Production of AIP Document	5d	15-May-06 A	19-May-06 A
SDS22710	Issue AIP Document to tie	0d		15-May-06 A
SDS22720	tie AIP Document Review Period	14d	19-May-06 A	09-Jun-06 A
SDS22730	Receive AIP Document Comments from tie	0d		09-Jun-06 A
SDS22800	Incorporate tie Comments into AIP Document	47d	12-Jun-06 A	18-Aug-06 A
SDS22940	Issue AIP Document & Drawing to TAA	0d		16-Aug-06 A
SDS23120	TAA AIP Document & Drawing Review Period	5d	21-Aug-06 A	28-Aug-06 A
SDS23270	Recieve AIP Document & Drawing Comments from TAA	0d		23-Oct-06 A
SDS23350	Incorporate TAA Comments into AIP Document & Drawing	5d	23-Oct-06 A	27-Oct-06 A
SDS23430	Issue AIP Document & Drawing to Planning Department	0d		16-Aug-06 A
SDS23510	Planning Department AIP Document & Drawing Review Period	5d	21-Aug-06 A	28-Aug-06 A
SDS23590	Recieve AIP Document & Drawing Comments from Planning Department	0d		23-Oct-06 A
SDS23690	Incorporate Planning Department TAA Comments into AIP Document & Drawing	5d	23-Oct-06 A	27-Oct-06 A
SDS23700	Issue AIP Drawing & Document to Structures Detailed Design Team	0d		30-Oct-06 A
Preliminary Design Milestones		126d	09-Aug-06 A	12-Feb-07 A
13	Receipt of tie PD Acceptance	0d	09-Aug-06 A	
14	Receipt of Alignment Prelim Design Package	0d	23-Oct-06 A	
15	Receipt of OLE Prelim Design Package	0d	12-Feb-07 A	
16	Receipt of Ground Investigation Data & Interpretative Geotechnical Report	0d	18-Jan-07 A	
7	Receipt of an Approved and Signed AIP document	0d	14-Aug-06 A	
Superstructure Detailed Design		284d	18-Sep-06 A	29-Oct-07 A
10	Superstructure Detailed Design Draughting	8d	18-Jan-07 A	29-Jan-07 A
11	Issue Superstructure Detailed Design Package to CAT II Checker	0d	30-Jan-07 A	
12	Superstructure CAT II Check	59d	30-Jan-07 A	30-Apr-07 A
23	Receive & Incorporate CAT II comments	39d	01-May-07 A	29-Jun-07 A
24	Issue Notification Of Completion Letter- Haymarket Station Viaduct Superstructure Design Package to tie	0d		29-Oct-07 A
9	Superstructure Detailed Design	84d	18-Sep-06 A	29-Jan-07 A
SDS63690	Finalise Design (access/steps etc) & Prepare Planning Drawings	28d	03-Sep-07 A	12-Oct-07 A
Substructure Detailed Design		202d	18-Jan-07 A	29-Oct-07 A
31	Substructure Detailed Design	8d	18-Jan-07 A	29-Jan-07 A
32	Substructure Detailed Design Draughting	8d	18-Jan-07 A	29-Jan-07 A
34	Substructure CAT II Check	59d	30-Jan-07 A	30-Apr-07 A
35	Receive & Incorporate CAT II comments	39d	01-May-07 A	29-Jun-07 A
43	Issue Substructure Detailed Design Package to CAT II Checker	0d	30-Jan-07 A	
46	Issue Notification Of Completion Letter- Haymarket Station Viaduct Substructure Design Package to tie	0d	29-Oct-07 A	
SDS62050	IDC	8d	22-May-07 A	01-Jun-07 A
Issue Haymarket Station Viaduct Design Package For Construction/Fabrication		0d	08-Apr-08	08-Apr-08
51	Issue Haymarket Station Viaduct Design Package For Construction/Fabrication	0d	08-Apr-08	
Tram Haymarket Terrace 1 Sub Station (Task400.2.8)		489d	03-May-06 A	08-Apr-08
A548980	Preliminary Design of Substation	20d	03-May-06 A	31-May-06 A
A549380	Detailed Design Civils	339d	14-Aug-06 A	25-Jan-08
A549390	Detailed Architecture Design	47d	14-Aug-06 A	23-Oct-06 A
A549400	IDC on Detailed Design (Inc. Systems Assurance)	10d	03-Nov-06 A	17-Nov-06 A
A549410	Issue Tram Haymarket Terrace 1 Substation Planning Submission to tie For Approval	0d		17-Nov-06 A
A549420	tie Approval Period For Planning Submission	19d	20-Nov-06 A	15-Dec-06 A
A549430	Receive tie Comments	0d		08-Jan-07 A
A549440	Update Substation Planning Submission to Incorporate tie Comments	245d	11-Jan-07 A	25-Jan-08
A549450	Issue Tram Haymarket Terrace 1 Substation For Construction Drawings	0d		08-Apr-08
A549650	Compile Substation Planning Submission	9d	06-Nov-06 A	17-Nov-06 A
A550050	Substation Consultation Period	28d	19-Jun-06 A	27-Jul-06 A
A550170	Issue of Haymarket Terrace Substation Design	0d		30-Jun-06 A
SDS68540	Compile Detailed Engineering Drawings Submission	188d	10-Apr-07 A	25-Jan-08
SDS68550	Issue Notification Of Completion Letter- Tram Haymarket Terrace 1 Substation Detailed Engineering Drawings To tie	0d		25-Jan-08
Russell Road TPH Substation (Task400.2.9)		386d	30-May-06 A	30-Nov-07 A
A549020	Preliminary Design of Substation	5d	30-May-06 A	06-Jun-06 A
A549700	Detailed Design Civils	15d	24-Nov-06 A	15-Dec-06 A
A549710	Detailed Architecture Design	38d	20-Oct-06 A	15-Dec-06 A
A549720	IDC on Detailed Design (Inc. Systems Assurance)	38d	15-Jan-07 A	09-Mar-07 A
A549730	Issue Russell Road TPH Substation Planning Submission to tie for Approval	0d		09-Jan-07 A
A549740	tie Approval Period For Planning Submission	19d	09-Jan-07 A	05-Feb-07 A
A549750	Receive tie Comments	0d		10-Apr-07 A
A549760	Update Substation Planning Submission to Incorporate tie Comments	30d	02-Apr-07 A	18-May-07 A
A550080	Re-Work Preliminary Design (Relocate SubStation)	14d	11-Sep-06 A	29-Sep-06 A
A550090	Substation Consultation Period	28d	19-Jun-06 A	27-Jul-06 A
A550210	Issue of Russell Road Parralling Hut Design	0d		30-Jun-06 A
A550260	Compile Substation Planning Submission	3d	03-Jan-07 A	05-Jan-07 A
A550390	Design Review Panel	2d	16-Nov-06 A	17-Nov-06 A
SDS81040	Address tie Comments, Other Revisions, IDC & Section Submission Package	20d	02-Nov-07 A	30-Nov-07 A
Haymarket to Granton Square - Section 3 (Task500)		986d	19-Sep-05 A	28-Jul-09
Section Wide - Section 3		480d	05-May-06 A	26-Mar-08
Section Wide		480d	05-May-06 A	26-Mar-08
Preliminary Design Approvals		96d	05-May-06 A	15-Sep-06 A
SDS23260	Track IDC	38d	03-Jul-06 A	25-Aug-06 A
SDS23280	Tramstops IDC	38d	03-Jul-06 A	25-Aug-06 A
SDS23290	Roads IDC	40d	03-Jul-06 A	31-Aug-06 A
SDS23300	Structures IDC	51d	03-Jul-06 A	15-Sep-06 A
SDS23310	Substation IDC	5d	13-Jun-06 A	20-Jun-06 A
SDS23880	Informal Consultation with tie	38d	05-May-06 A	30-Jun-06 A
SDS23890	tie approval	19d	30-Jun-06 A	27-Jul-06 A
SDS34590	PD - Submit Section 3 Substation Deliverables	0d		20-Jun-06 A
SDS34600	PD - Submit Section 3 Track Deliverables	0d		30-Jun-06 A
SDS34610	PD - Submit Section 3 Tramstops Deliverables	0d		30-Jun-06 A
SDS34620	PD - Submit Section 3 Roads Deliverables	0d		30-Jun-06 A
SDS34630	PD - Submit Section 3 Structures Deliverables	0d		30-Jun-06 A
SDS34640	PD - Section 3 Complete - Issue to tie	0d		30-Jun-06 A
Stakeholder Reviews		377d	17-Jul-06 A	14-Jan-08
A569680	Review Potential Issues with tie & Determine Consultation Strategy	9d	17-Jul-06 A	28-Jul-06 A
A569770	Review Potential Issues with tie & Determine Consultation Strategy	61d	01-Oct-07 A	07-Jan-08 A
A569780	Feedback to Design Teams for Study	38d	12-Nov-07 A	14-Jan-08
SDS23330	Stakeholder Review (Inc. Noise Mitigation Meeting)	323d	31-Jul-06 A	10-Dec-07 A
OLE (Task 500.1)		248d	29-Aug-06 A	20-Aug-07 A
SDS31300	Produce Final Detailed Layout Plans	205d	29-Aug-06 A	13-Jul-07 A
SDS55890	Issue Notification Of Completion Letter- Final Detailed Layout Plans & Standard & Special Cross Sections to tie Sec3	0d		20-Aug-07 A

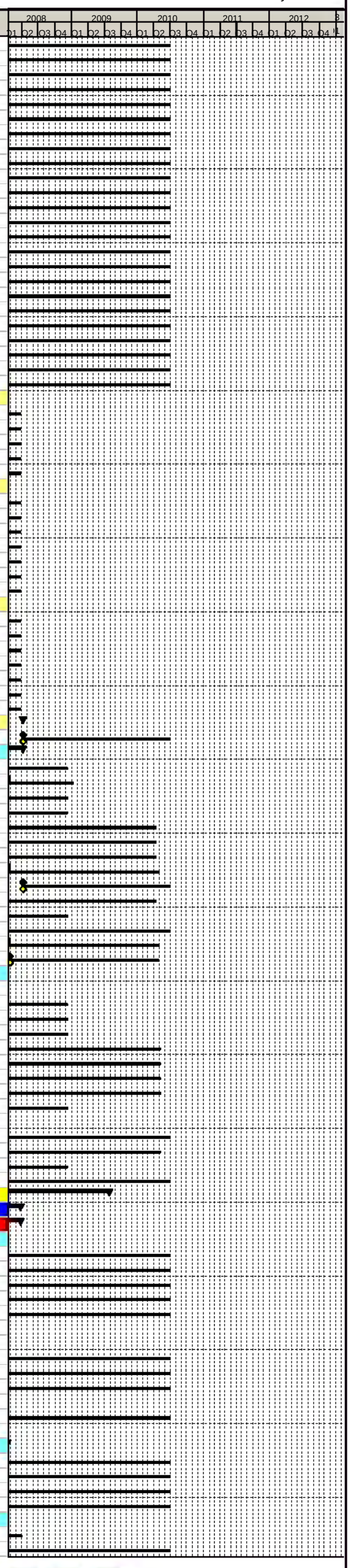

Primary Baseline
Actual Work
Remaining Work
Critical Remaining Work
Baseline Milestone
Milestone

Trams for Edinburgh ..connecting our Capital

Edinburgh Tram Project

SDS FULL DESIGN PROGRAMME @ V26

tie

Activity ID	Activity Name	Original Duration	Start	Finish
SDS59430	Finalise Combined Pole Design (With Street Lighting Traffic Signals)	5d	30-Jul-07 A	03-Aug-07 A
SDS67770	Pole siting on Roseburn Corridor (500.1)	14d	30-Aug-06 A	19-Sep-06 A
SDS69450	SDM Design Interface Review Meetings	1d	01-Dec-06 A	02-Dec-06 A
Design Assurance Review		12d	11-Mar-08	26-Mar-08
SDS72280	Produce Section Wide Design Assurance Statement	9d	11-Mar-08	26-Mar-08
VO86 Land Acquisition and Costing for Artificial Badger Setts (Section 3)		200d	07-Dec-06 A	24-Sep-07 A
VO2430	Meetings with TSS, Corderoy and NIL	184d	07-Dec-06 A	24-Sep-07 A
ROJ - CRT - Section 3A (Task500.2)		986d	19-Sep-05 A	28-Jul-09
Sub Section Wide		595d	06-Mar-06 A	04-Jul-08
Sub Section Wide IDC		20d	29-Jan-08	25-Feb-08
A40361	Subsection Wide IDC	19d	29-Jan-08	25-Feb-08
Design Assurance Review		10d	26-Feb-08	10-Mar-08
SDS67960	Produce Design Assurance Statement	9d	26-Feb-08	10-Mar-08
VO197 Tram Sighting Exercise Roseburn Junction to Granton Square (Not tie approved)		35d	14-May-07 A	29-Jun-07 A
SDS73480	Tram Driver Sighting Exercise	32d	14-May-07 A	29-Jun-07 A
SDS73490	Complete Tram Driver Sighting Exercise	0d		29-Jun-07 A
VO236 OLE Amendment for Pway Changes at Crewe Toll (Internal)		56d	18-Jun-07 A	03-Sep-07 A
A487128	OLE Amendments for Pway Changes at Crewe Toll	52d	18-Jun-07 A	03-Sep-07 A
VO242 OLE Rework for Section 3A (Internal)		45d	10-Sep-07 A	09-Nov-07 A
A487137	OLE rework for section 3A	42d	10-Sep-07 A	09-Nov-07 A
A487138	Issue OLE rework for section 3A	0d		09-Oct-07 A
Consents & Approvals		362d	05-Feb-07 A	04-Jul-08
Prior Approvals		362d	05-Feb-07 A	04-Jul-08
Combined Section Prior Approval		60d	11-Apr-08	04-Jul-08
A25480	Issue Combined Package 3A for Prior Approval to CEC	0d		11-Apr-08
A25490	Receive Combined Package 3A Comments From CEC	0d		06-Jun-08
A25530	Prior Approval Granted for Section 3A Combined Package	0d		04-Jul-08
A40330	CEC Approval Period - 3A Combined Package	38d	11-Apr-08	06-Jun-08
A40340	Update 3A Combined Package to CEC Comments	19d	06-Jun-08	04-Jul-08
Batch 3/02		52d	01-Feb-08	15-Apr-08
SDS75240	Batch 3/02 Formal Approval Period	38d	15-Feb-08	14-Apr-08
SDS75250	Issue Batch 3/02 For Approval to CEC	0d	15-Feb-08	
SDS75260	Receive CEC Prior Approval For Batch 3/02	0d	15-Apr-08	
SDS75290	Batch 3/02 Roseburn Tramstop & Bridge - Collation of Planning Drawings	9d	01-Feb-08*	14-Feb-08
Batch 3/03		121d	12-Oct-07 A	09-Apr-08
SDS76750	Batch 3/03 Formal Approval Period	38d	11-Feb-08	08-Apr-08
SDS76760	Issue Batch 3/03 For Approval to CEC	0d	11-Feb-08	
SDS76770	Receive CEC Prior Approval For Batch 3/03	0d	09-Apr-08	
SDS76790	Batch 3/03 Coltbridge Viaduct - Collation of Planning Drawings	9d	28-Jan-08*	08-Feb-08
SDS76800	Batch 3/03 Coltbridge Viaduct - Informal Consultation	38d	12-Oct-07 A	06-Dec-07 A
Batch 3/04		56d	12-Nov-07 A	07-Feb-08
SDS76810	Batch 3/04 Formal Approval Period	38d	05-Dec-07 A	06-Feb-08
SDS76820	Issue Batch 3/04 For Approval to CEC	0d	05-Dec-07 A	
SDS76830	Receive CEC Prior Approval For Batch 3/04	0d	07-Feb-08	
SDS76850	Batch 3/04 St Georges Access Bridges-Collation of Planning Drawings	15d	12-Nov-07 A	04-Dec-07 A
Batch 3/05		52d	08-Feb-08	22-Apr-08
SDS76870	Batch 3/05 Formal Approval Period	38d	22-Feb-08	21-Apr-08
SDS76880	Issue Batch 3/05 For Approval to CEC	0d	22-Feb-08	
SDS76890	Receive CEC Prior Approval For Batch 3/05	0d	22-Apr-08	
SDS76910	Batch 3/05 Ravelston Tramstop-Collation of Planning Drawings	9d	08-Feb-08*	21-Feb-08
Batch 3/07		48d	10-Dec-07 A	25-Feb-08
SDS76930	Batch 3/07 Formal Approval Period	38d	21-Dec-07 A	22-Feb-08
SDS76940	Issue Batch 3/07 For Approval to CEC	0d	21-Dec-07 A	
SDS76950	Receive CEC Prior Approval For Batch 3/07	0d	25-Feb-08	
SDS76970	Batch 3/07 Craigleith Drive Bridge - Collation of Planning Drawings	8d	10-Dec-07 A	20-Dec-07 A
Batch 3/09		48d	10-Dec-07 A	25-Feb-08
SDS76990	Batch 3/09 Formal Approval Period	38d	21-Dec-07 A	22-Feb-08
SDS77000	Issue Batch 3/09 For Approval to CEC	0d	21-Dec-07 A	
SDS77010	Receive CEC Prior Approval For Batch 3/09	0d	25-Feb-08	
SDS77030	Batch 3/09 Queensferry Road Bridge - Collation of Planning Drawings	8d	10-Dec-07 A	20-Dec-07 A
Batch 3/10		119d	15-Oct-07 A	08-Apr-08
SDS77050	Batch 3/10 Formal Approval Period	38d	08-Feb-08	07-Apr-08
SDS77060	Issue Batch 3/10 For Approval to CEC	0d	08-Feb-08	
SDS77070	Receive CEC Prior Approval For Batch 3/10	0d	08-Apr-08	
SDS77090	Batch 3/10 Craigleith Tramstop - Collation of Planning Drawings	73d	15-Oct-07 A	07-Feb-08
Batch 3/11		68d	12-Nov-07 A	25-Feb-08
SDS77110	Batch 3/11 Formal Approval Period	38d	21-Dec-07 A	22-Feb-08
SDS77120	Issue Batch 3/11 For Approval to CEC	0d	21-Dec-07 A	
SDS77130	Receive CEC Prior Approval For Batch 3/11	0d	25-Feb-08	
SDS77150	Batch 3/11 Groathill Road South Bridge - Collation of Planning Drawings	27d	12-Nov-07 A	20-Dec-07 A
Batch 3/12		52d	28-Mar-08	10-Jun-08
SDS77170	Batch 3/12 Formal Approval Period	38d	11-Apr-08	09-Jun-08
SDS77180	Issue Batch 3/12 For Approval to CEC	0d	11-Apr-08	
SDS77190	Receive CEC Prior Approval For Batch 3/12	0d	10-Jun-08	
SDS77210	Batch 3/12 Telford Road Bridge - Collation of Planning Drawings	9d	28-Mar-08*	10-Apr-08
Batch 3/13		126d	30-Jul-07 A	31-Jan-08
SDS77230	Batch 3/13 Formal Approval Period	45d	16-Nov-07 A	30-Jan-08
SDS77240	Issue Batch 3/13 For Approval to CEC	0d	16-Nov-07 A	
SDS77250	Receive CEC Prior Approval For Batch 3/13	0d	31-Jan-08	
SDS77270	Batch 3/13 Telford Road Tramstop - Collation of Planning Drawings	74d	30-Jul-07 A	16-Nov-07 A
Batch 3/14		182d	30-Jul-07 A	18-Apr-08
SDS77290	Batch 3/14 Formal Approval Period	38d	20-Feb-08	17-Apr-08
SDS77300	Issue Batch 3/14 For Approval to CEC	0d	20-Feb-08	
SDS77310	Receive CEC Prior Approval For Batch 3/14	0d	18-Apr-08	
SDS77330	Batch 3/14 Crewe Toll Tramstop - Collation of Planning Drawings	131d	30-Jul-07 A	19-Feb-08
Roads, Track, OLE, Landscaping, Street Lighting		40d	14-Jan-08	07-Mar-08
SDS27150	Informal Consultation With CEC & tie Over Prior Approval for Roads, Track, OLE, Landscaping and Street Lighting	38d	14-Jan-08	07-Mar-08
Tram Stop Roseburn		221d	09-Mar-07 A	22-Jan-08
A40440	Informal Consultation With CEC & tie over Prior Approval Tram Stop Roseburn	203d	09-Mar-07 A	22-Jan-08
Tram Stop Ravelston		14d	20-Feb-07 A	09-Mar-07 A
A25540	Issue Tram Stop Ravelston Design for Prior Approval	0d		09-Mar-07 A
A40470	Informal Consultation With CEC & tie over Prior Approval for Tram Stop Ravelston	13d	20-Feb-07 A	09-Mar-07 A
Tram Stop Craigleith		214d	09-Mar-07 A	14-Jan-08
A40500	Informal Consultation With CEC & tie over Prior Approval Tram Stop Craigleith	197d	09-Mar-07 A	14-Jan-08
Tram Stop Telford Road		214d	09-Mar-07 A	14-Jan-08
A40530	Informal Consultation With CEC & tie over Prior Approval Tram Stop Telford Road	197d	09-Mar-07 A	14-Jan-08
Tram Stop Crewe Toll for Western General Hospital		102d	09-Mar-07 A	30-Jul-07 A
A40560	Informal Consultation With CEC & tie over Prior Approval Tram Stop Crewe Toll for Western General Hospital	92d	09-Mar-07 A	30-Jul-07 A
Tram South Groathill Avenue Substation		288d	20-Feb-07 A	08-Apr-08
A27990	Prior Approval For Tram South Groathill Avenue Substation	0d		08-Apr-08
A41180	Informal Consultation With CEC & tie Over Prior Approval Tram South Groathill Avenue Substation	38d	20-Feb-07 A	18-Apr-07 A
Roseburn Corridor Retaining Structure Section A		41d	21-Jun-07 A	17-Aug-07 A
1163	Commence Roseburn Corridor RW Section A Informal Consultation With CEC & tie Over Prior Approval	38d	21-Jun-07 A	17-Aug-07 A

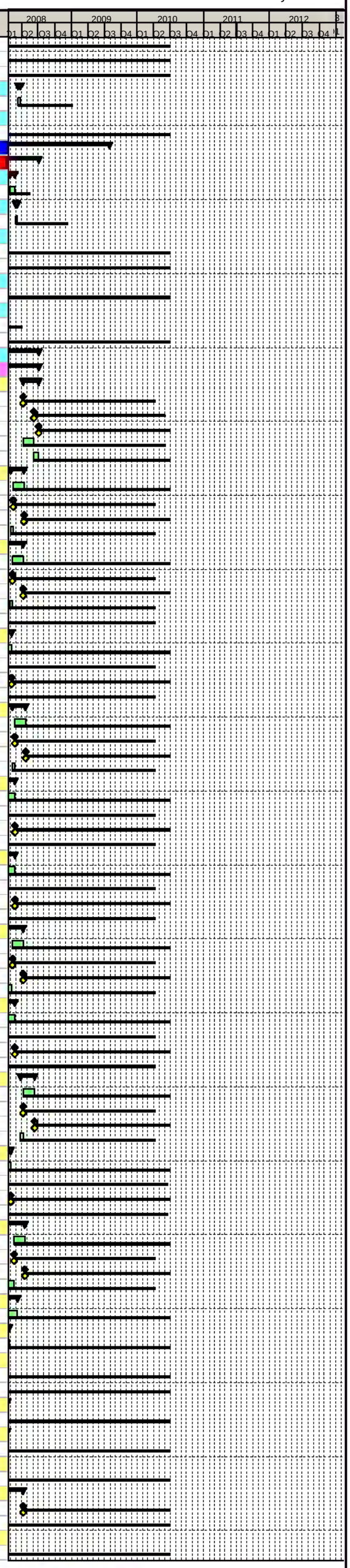

Primary Baseline
Actual Work
Remaining Work
Critical Remaining Work
Baseline Milestone
Milestone

Trams for Edinburgh
..connecting our Capital

Edinburgh Tram Project

SDS FULL DESIGN PROGRAMME @ V26

tie

Activity ID	Activity Name	Original Duration	Start	Finish
Roseburn Corridor Retaining Structure Section B		41d	21-Jun-07 A	17-Aug-07 A
1198	Commence Roseburn Corridor RW Section B Informal Consultation With CEC & tie Over Prior Approval	38d	21-Jun-07 A	17-Aug-07 A
Roseburn Corridor Retaining Structure Section C		41d	20-Jun-07 A	16-Aug-07 A
1203	Commence Roseburn Corridor RW Section C Informal Consultation With CEC & tie Over Prior Approval	38d	20-Jun-07 A	16-Aug-07 A
Roseburn Corridor Retaining Structure Section D		40d	25-Jun-07 A	17-Aug-07 A
1208	Commence Roseburn Corridor RW Section D Informal Consultation With CEC & tie Over Prior Approval	38d	25-Jun-07 A	17-Aug-07 A
Roseburn Corridor Retaining Structure Section E		41d	21-Jun-07 A	17-Aug-07 A
1213	Commence Roseburn Corridor RW Section E Informal Consultation With CEC & tie Over Prior Approval	38d	21-Jun-07 A	17-Aug-07 A
Roseburn Corridor Retaining Structure Section F		40d	25-Jun-07 A	17-Aug-07 A
1218	Commence Roseburn Corridor RW Section F Informal Consultation With CEC & tie Over Prior Approval	38d	25-Jun-07 A	17-Aug-07 A
Roseburn Corridor Retaining Structure Section G		20d	30-Jul-07 A	24-Aug-07 A
1223	Commence Roseburn Corridor RW Section G Informal Consultation With CEC & tie Over Prior Approval	19d	30-Jul-07 A	24-Aug-07 A
Roseburn Corridor Retaining Structure Section H		40d	25-Jun-07 A	17-Aug-07 A
1228	Commence Roseburn Corridor RW Section H Informal Consultation With CEC & tie Over Prior Approval	38d	25-Jun-07 A	17-Aug-07 A
Roseburn Terrace Bridge Superstructure		44d	02-Apr-07 A	01-Jun-07 A
A13290	Commence Roseburn Terrace Superstructure Informal Consultation With CEC & tie Over Prior Approval	38d	02-Apr-07 A	01-Jun-07 A
St Georges School Access Bridge Structure		40d	05-Feb-07 A	02-Apr-07 A
A13430	Commence St Georges Access Bridge Informal Consultation With CEC & tie Over Prior Approval	38d	05-Feb-07 A	02-Apr-07 A
St Georges School Footbridge Structure		50d	13-Apr-07 A	22-Jun-07 A
A13440	Commence St Georges Footbridge Informal Consultation With CEC & tie Over Prior Approval	45d	13-Apr-07 A	22-Jun-07 A
Ravelston Dykes Bridge Structure		42d	10-Apr-07 A	06-Jun-07 A
A13570	Commence Ravelston Dykes Informal Consultation With CEC & tie Over Prior Approval	38d	10-Apr-07 A	06-Jun-07 A
Craigleith Drive Bridge Structure		44d	30-Mar-07 A	30-May-07 A
A13580	Commence Craigleith Drive Bridge Informal Consultation With CEC & tie Over Prior Approval	38d	30-Mar-07 A	30-May-07 A
Holiday Inn Access Bridge Structure		42d	10-Apr-07 A	06-Jun-07 A
A13740	Commence Holiday Inn Access Bridge Informal Consultation With CEC & tie Over Prior Approval	38d	10-Apr-07 A	06-Jun-07 A
Queensferry Road Bridge Structure		42d	10-Apr-07 A	06-Jun-07 A
A13590	Commence Queensferry Road Bridge Informal Consultation With CEC & tie Over Prior Approval	38d	10-Apr-07 A	06-Jun-07 A
Groathill Road South Bridge Structure		61d	30-Mar-07 A	22-Jun-07 A
A13680	Commence Groathill Road South Bridge Informal Consultation With CEC & tie Over Prior Approval	53d	30-Mar-07 A	22-Jun-07 A
Telford Road Bridge Structure		192d	10-Apr-07 A	14-Jan-08
A13690	Commence Telford Road Bridge Informal Consultation With CEC & tie Over Prior Approval	178d	10-Apr-07 A	14-Jan-08
Technical Approvals		332d	05-Feb-07 A	22-May-08
Roseburn Corridor Retaining Structure Section A Review Period (TAA)		155d	21-May-07 A	21-Dec-07 A
962	Issue Roseburn Corridor RW Section A Design Package to TAA	0d	16-Aug-07 A	
963	TAA Roseburn Corridor RW Section A Design Package Review Period	38d	17-Aug-07 A	12-Oct-07 A
964	Receive Roseburn Corridor RW Section A Design Package comments from TAA	0d	09-Nov-07 A	
965	Incorporate TAA comments into Roseburn Corridor RW Section A Design Package	28d	12-Nov-07 A	21-Dec-07 A
993	Commence Roseburn Corridor RW Section A Informal Consultation With CEC Over Technical Approval	27d	21-May-07 A	29-Jun-07 A
Roseburn Corridor Retaining Structure Section B Review Period (TAA)		156d	18-May-07 A	21-Dec-07 A
1018	Commence Roseburn Corridor RW Section B Informal Consultation With CEC Over Technical Approval	38d	18-May-07 A	13-Jul-07 A
987	Issue Roseburn Corridor RW Section B Design Package to TAA	0d	16-Aug-07 A	
988	TAA Roseburn Corridor RW Section B Design Package Review Period	38d	17-Aug-07 A	12-Oct-07 A
989	Receive Roseburn Corridor RW Section B Design Package comments from TAA	0d	09-Nov-07 A	
990	Incorporate TAA comments into Roseburn Corridor RW Section B Design Package	28d	12-Nov-07 A	21-Dec-07 A
Roseburn Corridor Retaining Structure Section C Review Period (TAA)		156d	18-May-07 A	21-Dec-07 A
1012	Issue Roseburn Corridor RW Section C Design Package to TAA	0d	16-Aug-07 A	
1013	TAA Roseburn Corridor RW Section C Design Package Review Period	38d	17-Aug-07 A	12-Oct-07 A
1014	Receive Roseburn Corridor RW Section C Design Package comments from TAA	0d	09-Nov-07 A	
1015	Incorporate TAA comments into Roseburn Corridor RW Section C Design Package	28d	12-Nov-07 A	21-Dec-07 A
1043	Commence Roseburn Corridor RW Section C Informal Consultation With CEC Over Technical Approval	38d	18-May-07 A	13-Jul-07 A
Roseburn Corridor Retaining Structure Section D Review Period (TAA)		156d	18-May-07 A	21-Dec-07 A
1037	Issue Roseburn Corridor RW Section D Design Package to TAA	0d	16-Aug-07 A	
1038	TAA Roseburn Corridor RW Section D Design Package Review Period	38d	17-Aug-07 A	12-Oct-07 A
1039	Receive Roseburn Corridor RW Section D Design Package comments from TAA	0d	09-Nov-07 A	
1040	Incorporate TAA comments into Roseburn Corridor RW Section D Design Package	28d	12-Nov-07 A	21-Dec-07 A
1068	Commence Roseburn Corridor RW Section D Informal Consultation With CEC Over Technical Approval	29d	18-May-07 A	02-Jul-07 A
Roseburn Corridor Retaining Structure Section E Review Period (TAA)		155d	21-May-07 A	21-Dec-07 A
1062	Issue Roseburn Corridor RW Section E Design Package to TAA	0d	16-Aug-07 A	
1063	TAA Roseburn Corridor RW Section E Design Package Review Period	38d	17-Aug-07 A	12-Oct-07 A
1064	Receive Roseburn Corridor RW Section E Design Package comments from TAA	0d	09-Nov-07 A	
1065	Incorporate TAA comments into Roseburn Corridor RW Section E Design Package	28d	12-Nov-07 A	21-Dec-07 A
1093	Commence Roseburn Corridor RW Section E Informal Consultation With CEC Over Technical Approval	38d	21-May-07 A	16-Jul-07 A
Roseburn Corridor Retaining Structure Section F Review Period (TAA)		156d	18-May-07 A	21-Dec-07 A
1087	Issue Roseburn Corridor RW Section F Design Package to TAA	0d	16-Aug-07 A	
1088	TAA Roseburn Corridor RW Section F Design Package Review Period	38d	17-Aug-07 A	12-Oct-07 A
1089	Receive Roseburn Corridor RW Section F Design Package comments from TAA	0d	09-Nov-07 A	
1090	Incorporate TAA comments into Roseburn Corridor RW Section Fe Design Package	28d	12-Nov-07 A	21-Dec-07 A
1118	Commence Roseburn Corridor RW Section F Informal Consultation With CEC Over Technical Approval	38d	18-May-07 A	13-Jul-07 A
Roseburn Corridor Retaining Structure Section G Review Period (TAA)		154d	22-May-07 A	21-Dec-07 A
1112	Issue Roseburn Corridor RW Section G Design Package to TAA	0d	16-Aug-07 A	
1113	TAA Roseburn Corridor RW Section G Design Package Review Period	38d	17-Aug-07 A	12-Oct-07 A
1114	Receive Roseburn Corridor RW Section G Design Package comments from TAA	0d	09-Nov-07 A	
1115	Incorporate TAA comments into Roseburn Corridor RW Section G Design Package	28d	12-Nov-07 A	21-Dec-07 A
1143	Commence Roseburn Corridor RW Section G Informal Consultation With CEC Over Technical Approval	38d	22-May-07 A	17-Jul-07 A
Roseburn Corridor Retaining Structure Section H Review Period (TAA)		111d	20-Jul-07 A	21-Dec-07 A
1137	Issue Roseburn Corridor RW Section H Design Package to TAA	0d	16-Aug-07 A	
1138	TAA Roseburn Corridor RW Section H Design Package Review Period	38d	17-Aug-07 A	12-Oct-07 A
1139	Receive Roseburn Corridor RW Section H Design Package comments from TAA	0d	09-Nov-07 A	
1140	Incorporate TAA comments into Roseburn Corridor RW Section H Design Package	28d	12-Nov-07 A	21-Dec-07 A
1148	Commence Roseburn Corridor RW Section H Informal Consultation With CEC Over Technical Approval	14d	20-Jul-07 A	09-Aug-07 A
Roseburn Terrace Bridge Review Period (TAA)		152d	24-Apr-07 A	21-Nov-07 A
A10380	Commence Roseburn Terrace Informal Consultation With CEC Over Technical Approval	17d	24-Apr-07 A	18-May-07 A
A8170	Issue Roseburn Terrace Design Package to TAA	0d		02-Jul-07 A
A8180	TAA Roseburn Terrace Design Package Review Period	38d	02-Jul-07 A	24-Aug-07 A
A8190	Receive Roseburn TerraceDesign Package Comments from TAA	0d		06-Nov-07 A
A8200	Incorporate TAA Comments into Roseburn Terrace Design Package	10d	07-Nov-07 A	21-Nov-07 A
Coltbridge Viaduct Structure Review Period (TAA)		91d	30-Jul-07 A	03-Dec-07 A
A12950	Commence Coltbridge Viaduct Informal Consultation With CEC Over Technical Approval	31d	30-Jul-07 A	13-Sep-07 A
A8500	Issue Coltbridge Viaduct Design Package to TAA	0d		13-Sep-07 A
A8510	TAA Coltbridge Viaduct Design Package Review Period	38d	13-Sep-07 A	07-Nov-07 A
A8520	Receive Coltbridge Viaduct Design Package Comments from TAA	0d		19-Nov-07 A
A8530	Incorporate TAA Comments into Coltbridge Viaduct Design Package	9d	20-Nov-07 A	03-Dec-07 A
St Georges School Access Bridge Structure Review Period (TAA)		161d	05-Feb-07 A	17-Sep-07 A
A12960	Commence St Georges Access Bridge Informal Consultation With CEC Over Technical Approval	60d	05-Feb-07 A	08-May-07 A
A8690	Issue St Georges Access Bridge Design Package to TAA	0d		25-May-07 A
A8700	TAA St Georges Access Bridge Design Package Review Period	38d	25-May-07 A	20-Jul-07 A
A8710	Receive St Georges Access Bridge Design Package Comments from TAA	0d		03-Sep-07 A
A8720	Incorporate TAA Comments into St Georges Access Bridge Design Package	9d	04-Sep-07 A	17-Sep-07 A
St Georges School Footbridge Structure Review Period (TAA)		97d	04-May-07 A	17-Sep-07 A
A12970	Commence St Georges Footbridge Informal Consultation With CEC Over Technical Approval	14d	04-May-07 A	25-May-07 A
A8870	Issue St Georges Footbridge Design Package to TAA	0d		25-May-07 A
A8880	TAA St Georges Footbridge Design Package Review Period	38d	29-May-07 A	23-Jul-07 A

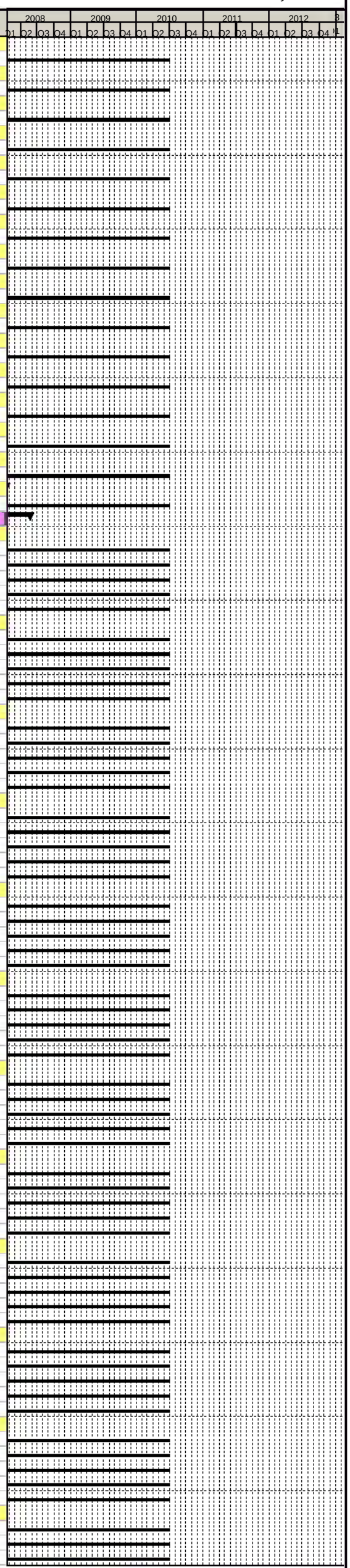

Primary Baseline
Actual Work
Remaining Work
Critical Remaining Work
Baseline Milestone
Milestone

Trams for Edinburgh ..connecting our Capital

Edinburgh Tram Project

SDS FULL DESIGN PROGRAMME @ V26

tie

Activity ID	Activity Name	Original Duration	Start	Finish
A8890	Receive St Georges Footbridge Design Package Comments from TAA	0d		03-Sep-07 A
A8900	Incorporate TAA Comments into St Georges Footbridge Design Package	9d	04-Sep-07 A	17-Sep-07 A
Ravelston Dykes Bridge Structure Review Period (TAA)		148d	22-Feb-07 A	17-Sep-07 A
A12980	Commence Ravelston Dykes Informal Consultation With CEC Over Technical Approval	38d	22-Feb-07 A	20-Apr-07 A
A9060	Issue Ravelston Dykes Design Package to TAA	0d		25-May-07 A
A9070	TAA Ravelston Dykes Design Package Review Period	38d	29-May-07 A	23-Jul-07 A
A9080	Receive Ravelston Dykes Design Package Comments from TAA	0d		03-Sep-07 A
A9090	Incorporate TAA Comments into Ravelston Dykes Design Package	9d	04-Sep-07 A	17-Sep-07 A
Craigleith Drive Bridge Structure Review Period (TAA)		105d	24-Apr-07 A	17-Sep-07 A
A12990	Commence Craigleith Drive Bridge Informal Consultation With CEC Over Technical Approval	31d	24-Apr-07 A	11-Jun-07 A
A9250	Issue Craigleith Drive Bridge Design Package to TAA	0d		12-Jun-07 A
A9260	TAA Craigleith Drive Bridge Design Package Review Period	38d	12-Jun-07 A	06-Aug-07 A
A9270	Receive Craigleith Drive Bridge Design Package Comments from TAA	0d		03-Sep-07 A
A9280	Incorporate TAA Comments into Craigleith Drive Bridge Design Package	9d	04-Sep-07 A	17-Sep-07 A
Holiday Inn Access Bridge Structure Review Period (TAA)		115d	10-Apr-07 A	17-Sep-07 A
A13050	Commence Holiday Inn Access Bridge Informal Consultation With CEC Over Technical Approval	25d	10-Apr-07 A	17-May-07 A
A9900	Issue Holiday Inn Access Bridge Design Package to TAA	0d		18-May-07 A
A9910	TAA Holiday Inn Access Bridge Design Package Review Period	38d	21-May-07 A	16-Jul-07 A
A9920	Receive Holiday Inn Access Bridge Design Package Comments from TAA	0d		03-Sep-07 A
A9930	Incorporate TAA Comments into Holiday Inn Access Bridge Design Package	9d	04-Sep-07 A	17-Sep-07 A
Queensferry Road Bridge Structure Review Period (TAA)		150d	10-Apr-07 A	05-Nov-07 A
A13000	Commence Queensferry Road Bridge Informal Consultation With CEC Over Technical Approval	25d	10-Apr-07 A	17-May-07 A
A9440	Issue Queensferry Road Bridge Design Package to TAA	0d		18-May-07 A
A9450	TAA Queensferry Road Bridge Design Package Review Period	38d	21-May-07 A	16-Jul-07 A
A9460	Receive Queensferry Road Bridge Design Package Comments from TAA	0d		22-Oct-07 A
A9470	Incorporate TAA Comments into Queensferry Road Bridge Design Package	9d	23-Oct-07 A	05-Nov-07 A
Groathill Road South Bridge Structure Review Period (TAA)		105d	24-Apr-07 A	17-Sep-07 A
A13010	Commence Groathill Road South Bridge Informal Consultation With CEC Over Technical Approval	18d	24-Apr-07 A	21-May-07 A
A9630	Issue Groathill Road South Bridge Design Package to TAA	0d		26-Jun-07 A
A9640	TAA Groathill Road South Bridge Design Package Review Period	38d	26-Jun-07 A	20-Aug-07 A
A9650	Receive Groathill Road South Bridge Design Package Comments from TAA	0d		03-Sep-07 A
A9660	Incorporate TAA Comments into Groathill Road South Bridge Design Package	9d	04-Sep-07 A	17-Sep-07 A
Telford Road Bridge Structure Review Period (TAA)		150d	10-Apr-07 A	05-Nov-07 A
A13020	Commence Telford Road Bridge Informal Consultation With CEC Over Technical Approval	26d	10-Apr-07 A	18-May-07 A
A9820	Issue Telford Road Bridge Design Package to TAA	0d		25-May-07 A
A9830	TAA Telford Road Bridge Design Package Review Period	38d	25-May-07 A	23-Jul-07 A
A9840	Receive Telford Road Bridge Design Package Comments from TAA	0d		22-Oct-07 A
A9850	Incorporate TAA Comments into Telford Road Bridge Design Package	9d	23-Oct-07 A	05-Nov-07 A
Roads Technical Approval		94d	14-Jan-08	22-May-08
SDS27160	Issue Roads Design to Roads Authority for Approval	0d		25-Feb-08
SDS27170	Roads Authority Approval Period	38d	26-Feb-08	23-Apr-08
SDS27180	Receive Roads Authority Comments	0d		23-Apr-08
SDS27190	Update to Roads Authority Comments	19d	24-Apr-08	22-May-08
SDS27200	Roads Authority Informal Consultation	38d	14-Jan-08	07-Mar-08
SDS27270	Roads Technical Approval Granted	0d		22-May-08
Drainage Technical Approval		78d	14-Jan-08	30-Apr-08
SDS72600	Roads Authority Informal Consultation For Drainage	38d	14-Jan-08	07-Mar-08
SDS72610	Issue Drainage Design to Roads Authority for Approval	0d		25-Feb-08
SDS72620	Roads Authority Approval Period For Drainage	38d	26-Feb-08	23-Apr-08
SDS72630	Receive Roads Authority Comments For Drainage	0d		23-Apr-08
SDS72640	Update to Roads Authority Comments For Drainage	5d	24-Apr-08	30-Apr-08
SDS72650	Drainage Technical Approval Granted	0d		30-Apr-08
Track (Task 500.2.1)		496d	13-Mar-06 A	22-Feb-08
A2880	First Pass Mx Horizontal and Vertical Alignment	47d	13-Mar-06 A	24-May-06 A
A2890	Handover Alignment Design P Way to Roads	0d		25-May-06 A
A2900	Coordination Meeting/Workshop Between PWay/Roads & Resolution of Major Conflicts	1d	25-May-06 A	25-May-06 A
SDS26870	Revise Alignment to Match Roads First Pass Vertical	3d	15-Jan-07 A	17-Jan-07 A
SDS26920	Handover Alignment Design Track to Roads	0d		17-Jan-07 A
SDS27290	Revise Alignment to Inc. Preliminary Design Comments	64d	07-Aug-06 A	10-Nov-06 A
SDS27310	Handover Alignment Design Track to Roads	0d		10-Nov-06 A
SDS57060	Issue Track Alignment Design to tie Section 3A	0d		02-Feb-07 A
SDS57340	tie Approval Period	19d	05-Feb-07 A	02-Mar-07 A
SDS57350	Incorporate tie Comments	1d	04-May-07 A	05-May-07 A
SDS59560	IDC Track Design	10d	19-Jan-07 A	02-Feb-07 A
SDS60890	Revise Track Alignment to Inc. Modelling Changes	9d	30-Oct-06 A	10-Nov-06 A
SDS70190	Receive tie Comments	0d	03-Apr-07 A	
SDS75120	Address tie Comments, Other Revisions, IDC & Section Submission Package	129d	06-Aug-07 A	22-Feb-08
VO111 Crewe Toll Land Availability		5d	29-Jan-07 A	02-Feb-07 A
SDS74500	Provisional Alignment Design and Produce Drawings	2d	29-Jan-07 A	30-Jan-07 A
SDS74510	Issue to Interfacing SDS Design Teams for Comments	0d		30-Jan-07 A
SDS74520	Recieve Comments	0d	31-Jan-07 A	
SDS74530	Incorporate Comments, develop design and incorporate into overall section 3a design	3d	31-Jan-07 A	02-Feb-07 A
Roads, Street Lighting & Landscaping (Task 500.2.2)		594d	07-Mar-06 A	04-Jul-08
A2910	Route Appreciation/Junct Layout & Determine with tie & CEC Works Extent	1d	19-May-06 A	19-May-06 A
A2920	Frontage Surveys	30d	07-Mar-06 A	21-Apr-06 A
A2930	Set Up Mx Models	7d	18-May-06 A	26-May-06 A
A2940	Produce Preliminary Horizontal Road Alignment Design (Inc Lanes & Parking Zones)	5d	30-May-06 A	05-Jun-06 A
A2950	Preliminary Road Safety Audit	1d	30-Jun-06 A	30-Jun-06 A
A2960	Review & Amend TRO Drawings & Schedules for Modifications Required Post Prelim Design	3d	12-Jun-06 A	14-Jun-06 A
A2970	Handover Alignment Design Roads to Pway	0d		29-Jun-06 A
A2980	Coordination Meeting/Workshop Between Roads & Pway Teams	1d	29-Jun-06 A	29-Jun-06 A
A5500	Undertake Road Marking, Pedestrian Req & Traffic Signalling Design	3d	06-Jun-06 A	08-Jun-06 A
SDS26880	Produce First Pass Vertical Alignment	2d	10-Jan-07 A	11-Jan-07 A
SDS26900	Handover Alignment Design Roads to Pway	0d		11-Jan-07 A
SDS26930	Revise Vertical Alignment to Match Final Track Alignment	3d	17-Jan-07 A	19-Jan-07 A
SDS26940	Horizontal & Vertical Alignment Design Complete	0d		09-Feb-07 A
SDS26950	Issue Notification Of Completion Letter- Roads Design to tie for Approval Section 3A	0d		14-Aug-07 A
SDS26960	Cross Check all Horizontal Design Aspects With Vertical Alignment	5d	12-Feb-07 A	16-Feb-07 A
SDS27000	Issue Construction Drawings	0d		04-Jul-08
SDS27010	Road Safety Audit Stage 2 (Intermediate)	2d	01-Mar-07 A	02-Mar-07 A
SDS27020	Insert Intermediate RSA Comments	5d	30-Jul-07 A	03-Aug-07 A
SDS27030	Produce Site Clearance Drawings & Schedule	127d	16-Jan-07 A	27-Jul-07 A
SDS27040	Produce Fencing, Barriers & Guardrails Design	5d	12-Feb-07 A	16-Feb-07 A
SDS27050	Produce Street Lighting Design (& Liaise With OLE)	83d	16-Feb-07 A	25-Jun-07 A
SDS27070	Produce Soft Landscaping Design	134d	19-Jan-07 A	13-Aug-07 A
SDS27090	Produce Traffic Signs Design (Signs, Markings, Signals)	5d	12-Feb-07 A	16-Feb-07 A
SDS27100	Produce Earthworks Design	86d	10-Apr-07 A	17-Aug-07 A
SDS27320	Revise Alignment to Inc. Final Track Horizontal Alignment (Horizontal Design Freeze) & Issue to Substn Designers	2d	08-Jan-07 A	09-Jan-07 A
SDS27330	Produce Kerbs, Footway & Paved Area Design	5d	12-Feb-07 A	16-Feb-07 A
SDS27340	Produce Pavement Design	56d	08-May-07 A	31-Jul-07 A
SDS27350	IDC (Inc. Systems Assurance)	5d	12-Feb-07 A	16-Feb-07 A
SDS56370	Issue Notification Of Completion Letter- Hard & Soft Landscaping Design to tie Section 3A	0d		26-Sep-07 A
SDS56790	Issue Notification Of Completion Letter- Street Lighting Design (Inc. Any OLE Combined Pole Design) to tie Section 3A	0d		17-Aug-07 A

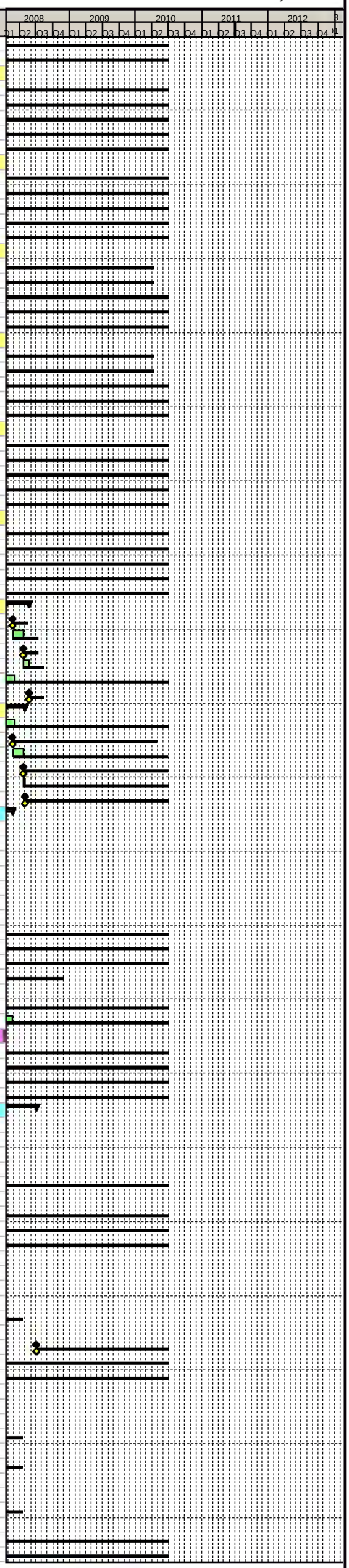

Primary Baseline
Actual Work
Remaining Work
Critical Remaining Work
Baseline Milestone
Milestone

Trams for Edinburgh ..connecting our Capital

Edinburgh Tram Project

SDS FULL DESIGN PROGRAMME @ V26

tie

Activity ID	Activity Name	Original Duration	Start	Finish
SDS59340	Compile Planning Drawings	9d	31-Jul-07 A	13-Aug-07 A
SDS59730	Advise Track, Stops, Modellers Changes To Accom RSA1 & PD Comments	6d	16-Oct-06 A	23-Oct-06 A
SDS59740	Pass Guidance/Envelope To Track & Others As Necessary	0d		07-Nov-06 A
SDS60480	Confirm - Track / Roads Alignment, Stop Locations, Track Drainage Connection Locations and Volumes	29d	08-Nov-06 A	20-Dec-06 A
SDS60870	Revise Horizontal to Inc. Track Horizontal Alignment, RSA1 & PD Comments	26d	13-Nov-06 A	20-Dec-06 A
SDS60880	Revise Alignment to Inc. Minor Changes From Traffic Modelling	2d	16-Nov-06 A	17-Nov-06 A
SDS67280	Street Lighting Survey Work	2d	20-Nov-06 A	21-Nov-06 A
SDS69670	Produce Hard Landscaping Design	111d	10-Apr-07 A	25-Sep-07 A
SDS80000	Final RSA	9d	05-Feb-08	18-Feb-08
SDS80010	Incorporate Final RSA Comments	5d	19-Feb-08	25-Feb-08
Drainage		254d	12-Mar-07 A	10-Mar-08
SDS71470	Hydraulic Modelling & First Pass Drainage Design	111d	12-Mar-07 A	29-Aug-07 A
SDS71480	Receipt of Drainage Survey Information	0d		25-Feb-08*
SDS71490	Outfall Consent/Approval from SW	0d		25-Feb-08*
SDS71500	Outfall Consent/Approval from CEC	0d		14-Jan-08*
SDS71510	Outfall Consent/Approval from SEPA	0d		10-May-07 A
SDS71520	Compile Drainage Package	5d	03-Oct-07 A	10-Oct-07 A
SDS71530	Issue Drainage Design Completion Letter to tie for Approval Section 3A	0d		11-Oct-07 A
SDS73220	Final Detailed Drainage Design	68d	29-Jun-07 A	10-Oct-07 A
SDS80400	Final Detailed Drainage Design	37d	26-Nov-07 A	25-Jan-08
SDS80410	Compile Drainage Package	2d	25-Jan-08	28-Jan-08
SDS80420	Issue Drainage Design Completion Letter to tie for Approval Section 3A	0d		28-Jan-08
SDS80430	Confirm Drainage and Amend if Required	9d	26-Feb-08	10-Mar-08
Boundary & Accomodation Works (Task 500.2.3)		306d	20-Nov-06 A	08-Feb-08
SDS42070	Detailed Design of Boundary & Accomodation Works	99d	26-Mar-07 A	24-Aug-07 A
SDS42080	Issue Notification Of Completion Letter- Detailed Design of Boundary & Accomodation Works Section 3A	0d		24-Aug-07 A
SDS61090	Detailed Design of Noise Fencing	178d	20-Nov-06 A	24-Aug-07 A
SDS81200	Additional Boundary and Accommodation Works and review	64d	30-Oct-07 A	08-Feb-08
Environmental		455d	14-Aug-06 A	29-May-08
Badger Mitigation Plan		455d	14-Aug-06 A	29-May-08
SDS60430	Produce Badger Mitigation Plan	88d	14-Aug-06 A	22-Dec-06 A
SDS60440	Issue Badger Mitigation Plan to tie	0d		22-Dec-06 A
SDS60450	tie Approval Period	28d	22-Dec-06 A	12-Feb-07 A
SDS60460	Update Badger Mitigation Plan to tie Comments	187d	29-Jan-07 A	08-Nov-07 A
SDS60470	Re-Issue Draft Badger Mitigation Plan to tie	0d		08-Nov-07 A
SDS60490	tie Approval Period	19d	09-Nov-07 A	06-Dec-07 A
SDS60500	Update Badger Mitigation Plan to Comments	14d	07-Jan-08 A	25-Jan-08
SDS60510	Badger Mitigation Plan and Landscape and Mitigation Plan Approval	0d		29-May-08
SDS67580	Selection of New Sett/ Holt Locations	2d	20-Nov-06 A	21-Nov-06 A
SDS67590	Design New Setts/ Holt	20d	09-Oct-06 A	06-Nov-06 A
SDS67600	Issue New Setts/ Holt Design Section 3A	0d		15-Nov-06 A
SDS81900	Receive Badger Mitigation Plan Comments	0d		04-Jan-08 A
SDS82830	Issue Badger Mitigation to Planning Committee	0d		06-Feb-08
Landscaping and Habitat Plan		355d	29-Aug-06 A	25-Jan-08
SDS60380	Produce Landscape & Habitat Management Plan	79d	29-Aug-06 A	22-Dec-06 A
SDS60390	Issue Landscape & Habitat Management Plan to tie	0d		22-Dec-06 A
SDS60400	tie Approval Period	48d	22-Dec-06 A	12-Mar-07 A
SDS60410	Issue Landscape & Habitat Plan to CEC	0d		27-Feb-07 A
SDS60420	Update Landscape & Habitat Plan to tie Comments	10d	12-Mar-07 A	26-Mar-07 A
SDS61100	CEC Approval Period	38d	28-Feb-07 A	26-Apr-07 A
SDS61110	Update Landscape & Habitat Plan to CEC Comments	86d	27-Apr-07 A	06-Sep-07 A
SDS61180	Re-Issue Landscape & Habitat Plan to tie	0d		06-Sep-07 A
SDS61190	Consultation with tie and CEC over Landscape & Habitat Plan	47d	07-Sep-07 A	15-Nov-07 A
SDS61230	Final Issue of Landscape & Habitat Plan	0d		25-Jan-08*
Utilities Plates 1 to 23		378d	06-Mar-06 A	27-Aug-07 A
A11760	Close Out PD Issues & Propose Diversions	23d	25-Sep-06 A	27-Oct-06 A
A11770	Issue PD to SUCs	0d		07-Nov-06 A
A11780	Consult SUCs and MUDFA (at later stage - when appointed)	46d	29-Jan-07 A	05-Apr-07 A
A11790	Access to MUDFA	0d		23-Oct-06 A
A11800	Issue For IDC	0d		05-Apr-07 A
A11810	IDC	8d	10-Apr-07 A	19-Apr-07 A
A11820	Issue to SUCs	0d		19-Apr-07 A
A11830	SUCs Approval	84d	19-Apr-07 A	27-Aug-07 A
UTIL080	Section 3A - Pre-Preliminary Design (Utilities)	76d	06-Mar-06 A	30-Jun-06 A
UTIL700	Issue to Statutory Utility Companies (SUCs)	0d		30-Jun-06 A
TRO's		551d	01-Apr-06 A	30-May-08
SDS33350	Collate Exisiting TROs	65d	01-Apr-06 A	12-Jul-06 A
SDS33360	Receive Preliminary Roads Design	0d		12-Jul-06 A
SDS82010	Interim TRO Design Section 3A	5d	28-Jan-08*	01-Feb-08
SDS82020	Final TRO Design Section 3A	5d	23-May-08	30-May-08
Roseburn Corridor Retaining Structures		465d	09-Aug-06 A	10-Jun-08
Roseburn Corridor Retaining Structures: Section A - Russell Road to Roseburn Terrace		425d	09-Aug-06 A	15-Apr-08
Preliminary Design Milestones		146d	09-Aug-06 A	12-Mar-07 A
945	Receipt of tie PD Acceptance	0d	09-Aug-06 A	
946	Receipt of Alignment Prelim Design Package	0d	12-Oct-06 A	
947	Receipt of OLE Prelim Design Package	0d	12-Mar-07 A	
948	Receipt of Ground Investigation Data & Interpretative Geotechnical Report	0d	15-Jan-07 A	
949	Receipt of an Approved and Signed AIP document	0d	23-Oct-06 A	
Structure Detailed Design		217d	09-Oct-06 A	17-Aug-07 A
951	Structure Detailed Design	188d	09-Oct-06 A	27-Jul-07 A
952	Structure Detailed Design Draughting	109d	12-Feb-07 A	27-Jul-07 A
953	Issue Structure Detailed Design Package to CAT I Checker	0d	13-Apr-07 A	
954	Structure CAT I Check	67d	13-Apr-07 A	24-Jul-07 A
955	Receive & Incorporate CAT I comments	73d	27-Apr-07 A	16-Aug-07 A
956	Issue Notification Of Completion Letter- Roseburn Corridor Retaining Structure Design Package For Section A to tie	0d	17-Aug-07 A	
SDS63700	Prepare Planning Drawings	9d	27-Jun-07 A	10-Jul-07 A
Issue Roseburn Corridor Retaining Structure A Design Package For Construction/Fabrication		0d	15-Apr-08	15-Apr-08
966	Issue Roseburn Corridor Retaining Structure A Design Package For Construction/Fabrication	0d		15-Apr-08
Roseburn Corridor Retaining Structures: Section B -Roseburn Terrace to Coltbridge Viaduct		379d	12-Oct-06 A	15-Apr-08
Preliminary Design Milestones		80d	12-Oct-06 A	12-Feb-07 A
970	Receipt of tie PD Acceptance	0d	11-Dec-06 A	
971	Receipt of Alignment Prelim Design Package	0d	12-Oct-06 A	
972	Receipt of OLE Prelim Design Package	0d	11-Dec-06 A	
973	Receipt of Ground Investigation Data & Interpretative Geotechnical Report	0d	12-Feb-07 A	
974	Receipt of an Approved and Signed AIP document	0d	11-Dec-06 A	
Structure Detailed Design		134d	12-Feb-07 A	17-Aug-07 A
976	Structure Detailed Design	109d	12-Feb-07 A	27-Jul-07 A
977	Structure Detailed Design Draughting	109d	12-Feb-07 A	27-Jul-07 A
978	Issue Structure Detailed Design Package to CAT I Checker	0d	18-Jul-07 A	
979	Structure CAT I Check	9d	18-Jul-07 A	31-Jul-07 A
980	Receive & Incorporate CAT I comments	5d	01-Aug-07 A	07-Aug-07 A
981	Issue Notification Of Completion Letter- Roseburn Corridor Retaining Structure Design Package For Section B to tie	0d	17-Aug-07 A	
SDS63720	Prepare Planning Drawings	9d	27-Jun-07 A	10-Jul-07 A

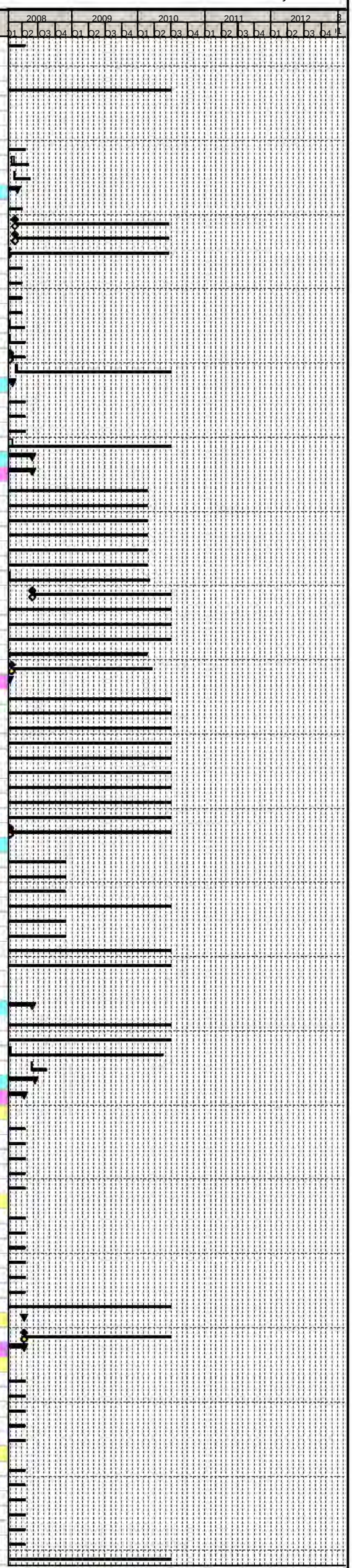

Primary Baseline
Actual Work
Remaining Work
Critical Remaining Work
Baseline Milestone
Milestone

Trams for Edinburgh
...connecting our Capital

Edinburgh Tram Project

SDS FULL DESIGN PROGRAMME @ V26

tie

Activity ID	Activity Name	Original Duration	Start	Finish
Issue Roseburn Corridor Retaining Structure B Design Package For Construction/Fabrication		0d	15-Apr-08	15-Apr-08
991	Issue Roseburn Corridor Retaining Structure B Design Package For Construction/Fabrication	0d	15-Apr-08	
Roseburn Corridor Retaining Structures: Section C - Coltbridge Viaduct to Ravelston		344d	12-Oct-06 A	26-Feb-08
Preliminary Design Milestones		60d	12-Oct-06 A	15-Jan-07 A
995	Receipt of tie PD Acceptance	0d	11-Dec-06 A	
996	Receipt of Alignment Prelim Design Package	0d	12-Oct-06 A	
997	Receipt of OLE Prelim Design Package	0d	11-Dec-06 A	
998	Receipt of Ground Investigation Data & Interpretative Geotechnical Report	0d	15-Jan-07 A	
999	Receipt of an Approved and Signed AIP document	0d	23-Oct-06 A	
Structure Detailed Design		134d	12-Feb-07 A	17-Aug-07 A
1001	Structure Detailed Design	109d	12-Feb-07 A	27-Jul-07 A
1002	Structure Detailed Design Draughting	109d	12-Feb-07 A	27-Jul-07 A
1003	Issue Structure Detailed Design Package to CAT I Checker	0d	18-Jul-07 A	
1004	Structure CAT I Check	9d	18-Jul-07 A	31-Jul-07 A
1005	Receive & Incorporate CAT I comments	5d	01-Aug-07 A	07-Aug-07 A
1006	Issue Notification Of Completion Letter- Roseburn Corridor Retaining Structure Design Package For Section C to tie	0d	17-Aug-07 A	
SDS63730	Prepare Planning Drawings	9d	27-Jun-07 A	10-Jul-07 A
Issue Roseburn Corridor Retaining Structure C Design Package For Construction/Fabrication		0d	26-Feb-08	26-Feb-08
1016	Issue Roseburn Corridor Retaining Structure C Design Package For Construction/Fabrication	0d	26-Feb-08	
Roseburn Corridor Retaining Structures: Section D - Ravelston to Craigleith Drive		344d	12-Oct-06 A	26-Feb-08
Preliminary Design Milestones		100d	12-Oct-06 A	12-Mar-07 A
1020	Receipt of tie PD Acceptance	0d	15-Jan-07 A	
1021	Receipt of Alignment Prelim Design Package	0d	12-Oct-06 A	
1022	Receipt of OLE Prelim Design Package	0d	12-Mar-07 A	
1023	Receipt of Ground Investigation Data & Interpretative Geotechnical Report	0d	15-Jan-07 A	
1024	Receipt of an Approved and Signed AIP document	0d	23-Oct-06 A	
Structure Detailed Design		134d	12-Feb-07 A	17-Aug-07 A
1026	Structure Detailed Design	109d	12-Feb-07 A	27-Jul-07 A
1027	Structure Detailed Design Draughting	109d	12-Feb-07 A	27-Jul-07 A
1028	Issue Structure Detailed Design Package to CAT I Checker	0d	14-May-07 A	
1029	Structure CAT I Check	51d	14-May-07 A	27-Jul-07 A
1030	Receive & Incorporate CAT I comments	41d	29-May-07 A	27-Jul-07 A
1031	Issue Notification Of Completion Letter- Roseburn Corridor Retaining Structure Design Package For Section D to tie	0d	17-Aug-07 A	
SDS63740	Prepare Planning Drawings	9d	27-Jun-07 A	10-Jul-07 A
Issue Roseburn Corridor Retaining Structure D Design Package For Construction/Fabrication		0d	26-Feb-08	26-Feb-08
1041	Issue Roseburn Corridor Retaining Structure D Design Package For Construction/Fabrication	0d	26-Feb-08	
Roseburn Corridor Retaining Structures: Section E -Craigleith Drive to Queensferry Road		344d	12-Oct-06 A	26-Feb-08
Preliminary Design Milestones		100d	12-Oct-06 A	12-Mar-07 A
1045	Receipt of tie PD Acceptance	0d	15-Jan-07 A	
1046	Receipt of Alignment Prelim Design Package	0d	12-Oct-06 A	
1047	Receipt of OLE Prelim Design Package	0d	12-Mar-07 A	
1048	Receipt of Ground Investigation Data & Interpretative Geotechnical Report	0d	15-Jan-07 A	
1049	Receipt of an Approved and Signed AIP document	0d	23-Oct-06 A	
Structure Detailed Design		114d	12-Mar-07 A	17-Aug-07 A
1051	Structure Detailed Design	90d	12-Mar-07 A	27-Jul-07 A
1052	Structure Detailed Design Draughting	90d	12-Mar-07 A	27-Jul-07 A
1053	Issue Structure Detailed Design Package to CAT I Checker	0d	23-Jul-07 A	
1054	Structure CAT I Check	9d	23-Jul-07 A	03-Aug-07 A
1055	Receive & Incorporate CAT I comments	8d	06-Aug-07 A	16-Aug-07 A
1056	Issue Notification Of Completion Letter- Roseburn Corridor Retaining Structure Design Package For Section E to tie	0d	17-Aug-07 A	
SDS63750	Prepare Planning Drawings	9d	27-Jun-07 A	10-Jul-07 A
Issue Roseburn Corridor Retaining Structure E Design Package For Construction/Fabrication		0d	26-Feb-08	26-Feb-08
1066	Issue Roseburn Corridor Retaining Structure E Design Package For Construction/Fabrication	0d	26-Feb-08	
Roseburn Corridor Retaining Structures: Section F - Queensferry Road to Groathill		344d	12-Oct-06 A	26-Feb-08
Preliminary Design Milestones		100d	12-Oct-06 A	12-Mar-07 A
1070	Receipt of tie PD Acceptance	0d	15-Jan-07 A	
1071	Receipt of Alignment Prelim Design Package	0d	12-Oct-06 A	
1072	Receipt of OLE Prelim Design Package	0d	12-Mar-07 A	
1073	Receipt of Ground Investigation Data & Interpretative Geotechnical Report	0d	15-Jan-07 A	
1074	Receipt of an Approved and Signed AIP document	0d	23-Oct-06 A	
Structure Detailed Design		114d	12-Mar-07 A	16-Aug-07 A
1076	Structure Detailed Design	90d	12-Mar-07 A	27-Jul-07 A
1077	Structure Detailed Design Draughting	90d	12-Mar-07 A	27-Jul-07 A
1078	Issue Structure Detailed Design Package to CAT I Checker	0d	23-Jul-07 A	
1079	Structure CAT I Check	5d	23-Jul-07 A	27-Jul-07 A
1080	Receive & Incorporate CAT I comments	13d	30-Jul-07 A	16-Aug-07 A
1081	Issue Notification Of Completion Letter- Roseburn Corridor Retaining Structure Design Package For Section F to tie	0d	16-Aug-07 A	
SDS63760	Prepare Planning Drawings	9d	27-Jun-07 A	10-Jul-07 A
Issue Roseburn Corridor Retaining Structure F Design Package For Construction/Fabrication		0d	26-Feb-08	26-Feb-08
1091	Issue Roseburn Corridor Retaining Structure F Design Package For Construction/Fabrication	0d	26-Feb-08	
Roseburn Corridor Retaining Structures: Section G - Groathill to Telford Road		344d	12-Oct-06 A	26-Feb-08
Preliminary Design Milestones		100d	12-Oct-06 A	12-Mar-07 A
1095	Receipt of tie PD Acceptance	0d	15-Jan-07 A	
1096	Receipt of Alignment Prelim Design Package	0d	12-Oct-06 A	
1097	Receipt of OLE Prelim Design Package	0d	12-Mar-07 A	
1098	Receipt of Ground Investigation Data & Interpretative Geotechnical Report	0d	15-Jan-07 A	
1099	Receipt of an Approved and Signed AIP document	0d	23-Oct-06 A	
Structure Detailed Design		114d	12-Mar-07 A	17-Aug-07 A
1101	Structure Detailed Design	90d	12-Mar-07 A	27-Jul-07 A
1102	Structure Detailed Design Draughting	90d	12-Mar-07 A	27-Jul-07 A
1103	Issue Structure Detailed Design Package to CAT I Checker	0d	23-Jul-07 A	
1104	Structure CAT I Check	9d	23-Jul-07 A	03-Aug-07 A
1105	Receive & Incorporate CAT I comments	8d	06-Aug-07 A	16-Aug-07 A
1106	Issue Notification Of Completion Letter- Roseburn Corridor Retaining Structure Design Package For Section G to tie	0d	17-Aug-07 A	
SDS63770	Prepare Planning Drawings	9d	27-Jun-07 A	10-Jul-07 A
Issue Roseburn Corridor Retaining Structure G Design Package For Construction/Fabrication		0d	26-Feb-08	26-Feb-08
1116	Issue Roseburn Corridor Retaining Structure G Design Package For Construction/Fabrication	0d	26-Feb-08	
Roseburn Corridor Retaining Structures: Section H - Telford Road to Ferry Road		419d	12-Oct-06 A	10-Jun-08
Preliminary Design Milestones		100d	12-Oct-06 A	12-Mar-07 A
1120	Receipt of tie PD Acceptance	0d	15-Jan-07 A	
1121	Receipt of Alignment Prelim Design Package	0d	12-Oct-06 A	
1122	Receipt of OLE Prelim Design Package	0d	12-Mar-07 A	
1123	Receipt of Ground Investigation Data & Interpretative Geotechnical Report	0d	15-Jan-07 A	
1124	Receipt of an Approved and Signed AIP document	0d	23-Oct-06 A	
Structure Detailed Design		114d	12-Mar-07 A	17-Aug-07 A
1126	Structure Detailed Design	90d	12-Mar-07 A	27-Jul-07 A
1127	Structure Detailed Design Draughting	90d	12-Mar-07 A	27-Jul-07 A
1128	Issue Structure Detailed Design Package to CAT I Checker	0d	23-Jul-07 A	
1129	Structure CAT I Check	9d	23-Jul-07 A	03-Aug-07 A
1130	Receive & Incorporate CAT I comments	8d	06-Aug-07 A	16-Aug-07 A
1131	Issue Notification Of Completion Letter- Roseburn Corridor Retaining Structure Design Package For Section H to tie	0d	17-Aug-07 A	
SDS63780	Prepare Planning Drawings	9d	27-Jun-07 A	10-Jul-07 A
Issue Roseburn Corridor Retaining Structure H Design Package For Construction/Fabrication		0d	10-Jun-08	10-Jun-08

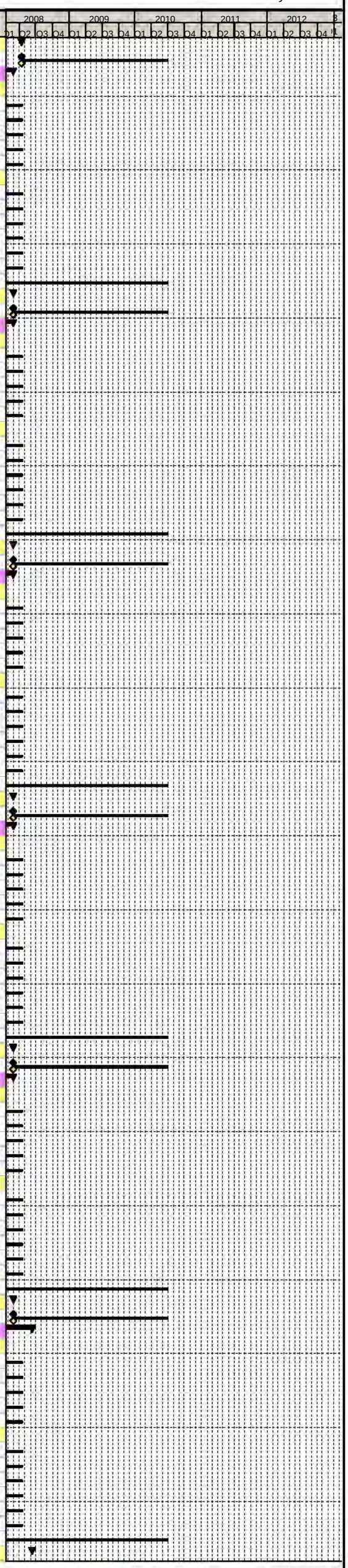

Primary Baseline
Actual Work
Remaining Work
Critical Remaining Work
Baseline Milestone
Milestone

Trams for Edinburgh ...connecting our Capital

Edinburgh Tram Project

SDS FULL DESIGN PROGRAMME @ V26

tie

Activity ID	Activity Name	Original Duration	Start	Finish
1141	Issue Roseburn Corridor Retaining Structure H Design Package For Construction/Fabrication	0d	10-Jun-08	
ROJ - ROS		986d	19-Sep-05 A	28-Jul-09
CON-0400	Requirements Definition (Contract Dates)	62d	19-Sep-05 A	19-Dec-05 A
Tram Stop Roseburn (Task500.2.6)		805d	30-May-06 A	28-Jul-09
A25460	Prepare Tram Stop Planning Submission Drawings	94d	05-Feb-07 A	29-Jun-07 A
A25470	Produce Engineering Detailed Design Drawings	15d	03-Sep-07 A	24-Sep-07 A
A25500	Issue Notification Of Completion Letter- Roseburn Tram Stop Design to tie	0d		11-Dec-07 A
A26020	Resolution of Abutment Issues	0d	24-Aug-07 A	
A26030	Delay Due to Abutment Assesment Work and Retaining Wall Design	70d	24-Aug-07 A	07-Dec-07 A
A26160	Tram Stop Design Complete - Drawings Issued for Construction	0d		15-Apr-08
A27510	Site Visit with tie & CEC To Review Preliminary Design	2d	19-Jan-07 A	22-Jan-07 A
A43420	IDC Tram Stop Design for Planning Submission (Inc. Systems Asssurance)	10d	29-Jan-07 A	12-Feb-07 A
A44820	Prepare Detailed Design Stop Drawings	6d	22-Jan-07 A	29-Jan-07 A
A47560	Produce As Built Drawings	200d	03-Oct-08	28-Jul-09
A47570	Receive Final As Built Data from the Contractor	0d		30-Jun-09
A47580	Receive First As Built Data from the Contractor	0d		01-Oct-08*
A47590	Issue Final As Built Drawings	0d		28-Jul-09
A4850	General Arrangement Drawings	18d	30-May-06 A	23-Jun-06 A
A5360	Issue Tram Stop GA Drawings for Roseburn	0d		30-Jun-06 A
SDS81090	Address tie Comments, Other Revisions, IDC & Section Submission Package	24d	02-Nov-07 A	07-Dec-07 A
Structures		547d	20-Feb-06 A	15-Apr-08
S01 Roseburn Terrace Bridge		547d	20-Feb-06 A	15-Apr-08
SDS47040	Review of Previous Work	9d	20-Feb-06 A	03-Mar-06 A
SDS47050	Optioneering	5d	03-Apr-06 A	07-Apr-06 A
SDS47060	Initial Design	6d	03-Apr-06 A	10-Apr-06 A
SDS47070	Production of AIP Drawing	6d	03-Apr-06 A	10-Apr-06 A
SDS47080	Issue AIP Drawing to tie	0d		10-Apr-06 A
SDS47090	Checking	5d	03-Apr-06 A	07-Apr-06 A
SDS47100	tie AIP Drawing Review Period	6d	03-Apr-06 A	10-Apr-06 A
SDS47110	Undertake Consultations	6d	03-Apr-06 A	10-Apr-06 A
SDS47120	Receive AIP Drawing Comments from tie	0d		24-Apr-06 A
SDS47130	Incorporate tie Comments into AIP Drawing	4d	24-Apr-06 A	28-Apr-06 A
SDS47140	Production of AIP Document	5d	28-Apr-06 A	08-May-06 A
SDS47150	Issue AIP Document to tie	0d		12-May-06 A
SDS47160	tie AIP Document Review Period	5d	08-May-06 A	15-May-06 A
SDS47170	Receive AIP Document Comments from tie	0d		15-May-06 A
SDS47180	Incorporate tie Comments into AIP Document	5d	15-May-06 A	22-May-06 A
SDS47190	Issue AIP Document & Drawing to TAA	0d		19-May-06 A
SDS47200	TAA AIP Document & Drawing Review Period	62d	19-May-06 A	21-Aug-06 A
SDS47210	Issue AIP Document & Drawing to Planning Department	0d		19-May-06 A
SDS47220	Planning Department AIP Document & Drawing Review Period	62d	19-May-06 A	21-Aug-06 A
SDS47230	Recieve AIP Document & Drawing Comments from TAA	0d		21-Aug-06 A
SDS47240	Incorporate TAA Comments into AIP Document & Drawing	4d	22-Aug-06 A	28-Aug-06 A
SDS47250	Recieve AIP Document & Drawing Comments from Planning Department	0d		21-Aug-06 A
SDS47260	Incorporate Planning Department TAA Comments into AIP Document & Drawing	4d	22-Aug-06 A	28-Aug-06 A
SDS47270	Issue AIP Drawing & Document to Structures Detailed Design Team	0d		15-Jan-07 A
SDS50160	Condition Survey	19d	06-Mar-06 A	31-Mar-06 A
Roseburn Terrace Bridge Preliminary Design Milestones		73d	09-Aug-06 A	20-Nov-06 A
A8030	Receipt of tie PD Acceptance	0d		09-Aug-06 A
A8040	Receipt of Alignment Prelim Design Package	0d		12-Oct-06 A
A8050	Receipt of OLE Prelim Design Package	0d		12-Oct-06 A
A8060	Receipt of Ground Investigation Data and Interpretative Geotechnical Data	0d		20-Nov-06 A
A8070	Receipt of Approved and Signed AIP Document	0d		14-Aug-06 A
Roseburn Terrace Bridge Superstructure Detailed Design		196d	18-Sep-06 A	27-Jun-07 A
A8080	Superstructure Detailed Design	103d	18-Sep-06 A	26-Feb-07 A
A8090	Superstructure Detailed Design Draughting	80d	23-Oct-06 A	26-Feb-07 A
A8100	Issue Superstructure Detailed Design Package to CAT II Checker	0d		26-Feb-07 A
A8110	Superstructure CAT II Check	44d	27-Feb-07 A	04-May-07 A
A8120	Receive and Incoporate CAT II Comments	9d	04-May-07 A	18-May-07 A
A8130	Issue Notification Of Completion Letter- Roseburn Terrace Bridge Superstructure Design Package to tie	0d		27-Jun-07 A
SDS39600	Detailed Design Resourcing	156d	18-Sep-06 A	18-May-07 A
SDS61920	IDC	9d	18-May-07 A	01-Jun-07 A
SDS63790	Prepare Planning Drawings	6d	08-May-07 A	15-May-07 A
Roseburn Terrace Bridge Substructure Detailed Design		100d	12-Feb-07 A	29-Jun-07 A
A8220	Substructure Detailed Design	10d	12-Feb-07 A	26-Feb-07 A
A8230	Substructure Detailed Design Draughting	0d	26-Feb-07 A	26-Feb-07 A
A8240	Issue Substructure Detailed Design Package to CAT II Checker	0d		26-Feb-07 A
A8250	Substructure CAT II Check	27d	27-Feb-07 A	10-Apr-07 A
A8260	Receive and Incorporate CAT II Comments	13d	02-Apr-07 A	23-Apr-07 A
A8270	Issue Notification Of Completion Letter- Roseburn Terrace Bridge Substructure Detailed Design Package to tie	0d		29-Jun-07 A
Issue Design Package For Construction / Fabrication		0d	15-Apr-08	15-Apr-08
SDS62410	Issue Design Package For Construction / Fabrication	0d		15-Apr-08
ROS - RAD		986d	19-Sep-05 A	28-Jul-09
CON-0430	Requirements Definition (Contract Dates)	62d	19-Sep-05 A	19-Dec-05 A
Tram Stop Ravelston (Task500.2.7)		805d	30-May-06 A	28-Jul-09
A25510	Prepare Tram Stop Planning Submission Drawings For Issue to Planning Drawings Team	96d	09-Feb-07 A	06-Jul-07 A
A25520	Produce Engineering Detailed Design Drawings	9d	22-Nov-07 A	06-Dec-07 A
A25550	Issue Notification Of Completion Letter- Ravelston Tram Stop Design to tie	0d		11-Dec-07 A
A26050	Resolution of Ownership of Structure Element	0d	03-Aug-07 A	
A26060	Delay Due to Access Ramp to Tramstop Design	84d	03-Aug-07 A	07-Dec-07 A
A26190	Tram Stop Design Complete - Drawings Issued for Construction	0d		22-Apr-08
A27520	Site Visit with tie & CEC To Review Preliminary Design	1d	19-Jan-07 A	19-Jan-07 A
A43480	IDC Tram Stop Design for Planning Submission (Inc. Systems Asssurance)	10d	29-Jan-07 A	12-Feb-07 A
A44830	Prepare Detailed Design Stop Drawings	5d	22-Jan-07 A	26-Jan-07 A
A47600	Produce As Built Drawings	200d	03-Oct-08	28-Jul-09
A47610	Receive Final As Built Data from the Contractor	0d		30-Jun-09
A47620	Receive First As Built Data from the Contractor	0d		01-Oct-08*
A47630	Issue Final As Built Drawings	0d		28-Jul-09
A4860	General Arrangement Drawings	23d	30-May-06 A	30-Jun-06 A
A5370	Issue Tram Stop GA Drawings for Ravelston Dykes	0d		30-Jun-06 A
Structures		587d	20-Dec-05 A	09-Apr-08
S02 Coltbridge Viaduct		587d	20-Dec-05 A	09-Apr-08
SDS47280	Review of Previous Work	9d	30-Jan-06 A	10-Feb-06 A
SDS47290	Optioneering	5d	13-Mar-06 A	17-Mar-06 A
SDS47300	Initial Design	9d	20-Mar-06 A	31-Mar-06 A
SDS47310	Production of AIP Drawing	5d	27-Mar-06 A	31-Mar-06 A
SDS47320	Issue AIP Drawing to tie	0d		10-Apr-06 A
SDS47330	Checking	5d	03-Apr-06 A	07-Apr-06 A
SDS47340	tie AIP Drawing Review Period	5d	03-Apr-06 A	07-Apr-06 A
SDS47350	Undertake Consultations	12d	03-Apr-06 A	21-Apr-06 A
SDS47360	Receive AIP Drawing Comments from tie	0d		17-Apr-06 A
SDS47370	Incorporate tie Comments into AIP Drawing	4d	17-Apr-06 A	21-Apr-06 A
SDS47380	Production of AIP Document	4d	24-Apr-06 A	27-Apr-06 A

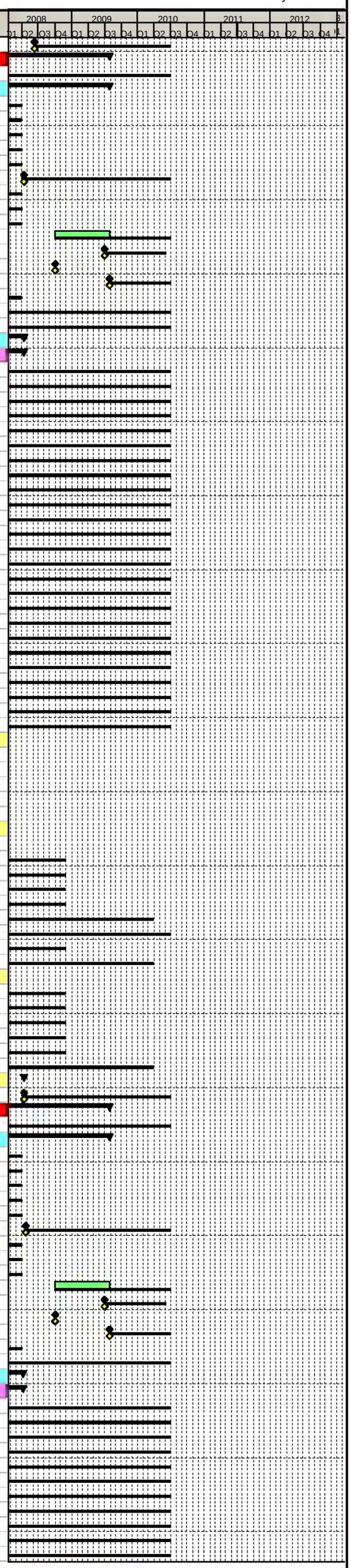

Primary Baseline
Actual Work
Remaining Work
Critical Remaining Work
Baseline Milestone
Milestone

Trams for Edinburgh ..connecting our Capital

Edinburgh Tram Project

SDS FULL DESIGN PROGRAMME @ V26

tie

Activity ID	Activity Name	Original Duration	Start	Finish
SDS47390	Issue AIP Document to tie	0d		12-May-06 A
SDS47400	tie AIP Document Review Period	5d	28-Apr-06 A	05-May-06 A
SDS47410	Receive AIP Document Comments from tie	0d		05-May-06 A
SDS47420	Incorporate tie Comments into AIP Document	14d	08-May-06 A	26-May-06 A
SDS47430	Issue AIP Document & Drawing to TAA	0d		14-Aug-06 A
SDS47440	TAA AIP Document & Drawing Review Period	9d	14-Aug-06 A	28-Aug-06 A
SDS47450	Issue AIP Document & Drawing to Planning Department	0d		11-Jul-06 A
SDS47460	Planning Department AIP Document & Drawing Review Period	32d	11-Jul-06 A	28-Aug-06 A
SDS47470	Recieve AIP Document & Drawing Comments from TAA	0d		20-Nov-06 A
SDS47480	Incorporate TAA Comments into AIP Document & Drawing	5d	20-Nov-06 A	24-Nov-06 A
SDS47490	Recieve AIP Document & Drawing Comments from Planning Department	0d		08-May-07 A
SDS47500	Incorporate Planning Department TAA Comments into AIP Document & Drawing	6d	11-Dec-06 A	18-Dec-06 A
SDS47510	Issue AIP Drawing & Document to Structures Detailed Design Team	0d		18-Dec-06 A
SDS50170	Condition Survey	19d	13-Feb-06 A	10-Mar-06 A
Coltbridge Viaduct Preliminary Design Milestones		100d	12-Oct-06 A	12-Mar-07 A
A8360	Receipt of tie PD Acceptance	0d		12-Mar-07 A
A8370	Receipt of Alignment Prelim Design Package	0d		12-Oct-06 A
A8380	Receipt of OLE Prelim Design Package	0d		12-Feb-07 A
A8390	Receipt of Approved and Signed AIP Document	0d		11-Dec-06 A
A8400	Receipt of Ground Investigation Data and Intepretative Geotechnical Data	0d		15-Dec-06 A
Coltbridge Viaduct Structure Detailed Design		182d	03-Jan-07 A	13-Sep-07 A
A8410	Structure Assessment and Detailed Design	42d	03-Jan-07 A	06-Mar-07 A
A8420	Structure Detailed Design Draughting	99d	26-Feb-07 A	27-Jul-07 A
A8430	Issue Structure Detailed Design Package to CAT II Checker	0d		27-Jul-07 A
A8440	Structure CAT II Check	19d	27-Jul-07 A	23-Aug-07 A
A8450	Receive and Incoporate CAT II Comments	9d	28-Aug-07 A	10-Sep-07 A
A8460	Issue Notification Of Completion Letter- Coltbridge Viaduct Structure Design Package to tie	0d		13-Sep-07 A
SDS31570	Detailed Design Resourcing	82d	03-Jan-07 A	08-May-07 A
Issue Coltbridge Viaduct Structure Design Package For Construction / Fabrication		0d	09-Apr-08	09-Apr-08
A8540	Issue Coltbridge Viaduct Structure Design Package For Construction / Fabrication	0d		09-Apr-08
Surveys		89d	20-Dec-05 A	21-Apr-06 A
Topographical		89d	20-Dec-05 A	21-Apr-06 A
A483070	Desk Top Studies	68d	20-Dec-05 A	07-Apr-06 A
A483080	Draft & approve Method Statements	0d	19-Apr-06 A	
A483090	Undertake Detailed Surveys	8d	10-Apr-06 A	21-Apr-06 A
S03 St Georges School Access Bridge		517d	13-Feb-06 A	25-Feb-08
SDS48000	Review of Previous Work	9d	13-Feb-06 A	24-Feb-06 A
SDS48010	Optioneering	5d	27-Mar-06 A	31-Mar-06 A
SDS48020	Initial Design	8d	03-Apr-06 A	13-Apr-06 A
SDS48030	Production of AIP Drawing	4d	10-Apr-06 A	13-Apr-06 A
SDS48040	Issue AIP Drawing to tie	0d		13-Apr-06 A
SDS48050	Checking	4d	24-Apr-06 A	27-Apr-06 A
SDS48060	tie AIP Drawing Review Period	4d	24-Apr-06 A	27-Apr-06 A
SDS48070	Undertake Consultations	17d	24-Apr-06 A	18-May-06 A
SDS48080	Receive AIP Drawing Comments from tie	0d		27-Apr-06 A
SDS48090	Incorporate tie Comments into AIP Drawing	5d	28-Apr-06 A	05-May-06 A
SDS48100	Production of AIP Document	5d	15-May-06 A	19-May-06 A
SDS48110	Issue AIP Document to tie	0d		30-Jun-06 A
SDS48120	tie AIP Document Review Period	5d	14-Aug-06 A	18-Aug-06 A
SDS48130	Receive AIP Document Comments from tie	0d		18-Aug-06 A
SDS48140	Incorporate tie Comments into AIP Document	4d	15-Aug-06 A	18-Aug-06 A
SDS48150	Issue AIP Document & Drawing to TAA	0d		18-Aug-06 A
SDS48160	TAA AIP Document & Drawing Review Period	5d	21-Aug-06 A	28-Aug-06 A
SDS48170	Issue AIP Document & Drawing to Planning Department	0d		11-Jul-06 A
SDS48180	Planning Department AIP Document & Drawing Review Period	88d	11-Jul-06 A	20-Nov-06 A
SDS48190	Recieve AIP Document & Drawing Comments from TAA	0d		23-Oct-06 A
SDS48200	Incorporate TAA Comments into AIP Document & Drawing	5d	23-Oct-06 A	27-Oct-06 A
SDS48210	Recieve AIP Document & Drawing Comments from Planning Department	0d		13-Nov-06 A
SDS48220	Incorporate Planning Department TAA Comments into AIP Document & Drawing	5d	20-Nov-06 A	27-Nov-06 A
SDS48230	Issue AIP Drawing & Document to Structures Detailed Design Team	0d		11-Dec-06 A
SDS50670	Condition Survey	19d	27-Feb-06 A	24-Mar-06 A
St Georges School Access Bridge Preliminary Design Milestones		74d	29-Aug-06 A	11-Dec-06 A
A8550	Receipt of tie PD Acceptance	0d		20-Nov-06 A
A8560	Receipt of Alignment Prelim Design Package	0d		12-Oct-06 A
A8570	Receipt of OLE Prelim Design Package	0d		12-Oct-06 A
A8580	Receipt of Approved and Signed AIP Document	0d		29-Aug-06 A
A8590	Receipt of Ground Investigation Data and Intepretative Data	0d		11-Dec-06 A
St Georges School Access Bridge Structure Detailed Design		196d	18-Sep-06 A	27-Jun-07 A
A8600	Structure Detailed Design	62d	18-Sep-06 A	18-Dec-06 A
A8610	Structure Detailed Design Draughting	69d	23-Oct-06 A	12-Feb-07 A
A8620	Issue Structure Detailed Design Package to CAT I Checker	0d		29-Jan-07 A
A8630	Structure CAT I Check	9d	30-Jan-07 A	12-Feb-07 A
A8640	Receive and Incoporate CAT I Comments	9d	13-Feb-07 A	26-Feb-07 A
A8650	Issue Notification Of Completion Letter- St Georges School Access Bridge Structure Design Package to tie	0d		27-Jun-07 A
SDS39680	Detailed Design Resourcing	150d	18-Sep-06 A	10-May-07 A
SDS61950	IDC	9d	27-Feb-07 A	12-Mar-07 A
SDS63810	Prepare Planning Drawings	9d	11-Jun-07 A	22-Jun-07 A
Issue St Georges School Access Bridge Structure Design Package For Construction / Fabrication		0d	25-Feb-08	25-Feb-08
A8730	Issue St Georges School Access Bridge Structure Design Package For Construction / Fabrication	0d		25-Feb-08
S04 St Georges School Footbridge		517d	13-Feb-06 A	25-Feb-08
SDS49440	Review of Previous Work	9d	13-Feb-06 A	24-Feb-06 A
SDS49450	Optioneering	5d	27-Mar-06 A	31-Mar-06 A
SDS49460	Initial Design	8d	03-Apr-06 A	13-Apr-06 A
SDS49470	Production of AIP Drawing	23d	24-Apr-06 A	26-May-06 A
SDS49480	Issue AIP Drawing to tie	0d		26-May-06 A
SDS49490	Checking	10d	15-May-06 A	30-May-06 A
SDS49500	tie AIP Drawing Review Period	4d	30-May-06 A	02-Jun-06 A
SDS49510	Undertake Consultations	32d	15-May-06 A	30-Jun-06 A
SDS49520	Receive AIP Drawing Comments from tie	0d		02-Jun-06 A
SDS49530	Incorporate tie Comments into AIP Drawing	5d	05-Jun-06 A	09-Jun-06 A
SDS49540	Production of AIP Document	5d	12-Jun-06 A	16-Jun-06 A
SDS49550	Issue St Georges School Footibridge AIP Document to tie	0d		30-Jun-06 A
SDS49560	tie AIP Document Review Period	1d	16-Jun-06 A	16-Jun-06 A
SDS49570	Receive AIP Document Comments from tie	0d		16-Jun-06 A
SDS49580	Incorporate tie Comments into AIP Document	8d	14-Aug-06 A	24-Aug-06 A
SDS49590	Issue AIP Document & Drawing to TAA	0d		24-Aug-06 A
SDS49600	TAA AIP Document & Drawing Review Period	2d	24-Aug-06 A	28-Aug-06 A
SDS49610	Issue AIP Document & Drawing to Planning Department	0d		11-Jul-06 A
SDS49620	Planning Department AIP Document & Drawing Review Period	32d	11-Jul-06 A	28-Aug-06 A
SDS49630	Recieve AIP Document & Drawing Comments from TAA	0d		20-Nov-06 A
SDS49640	Incorporate TAA Comments into AIP Document & Drawing	5d	20-Nov-06 A	24-Nov-06 A
SDS49650	Recieve AIP Document & Drawing Comments from Planning Department	0d		20-Nov-06 A
SDS49660	Incorporate Planning Department TAA Comments into AIP Document & Drawing	5d	20-Nov-06 A	24-Nov-06 A

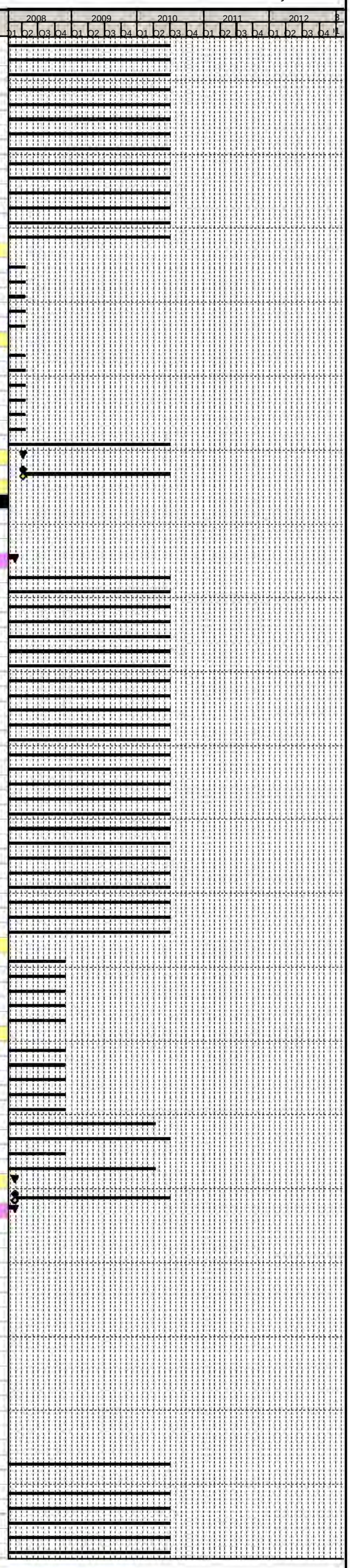

Primary Baseline
Actual Work
Remaining Work
Critical Remaining Work
Baseline Milestone
Milestone

Trams for Edinburgh ...connecting our Capital

Edinburgh Tram Project

SDS FULL DESIGN PROGRAMME @ V26

tie

Activity ID	Activity Name	Original Duration	Start	Finish
SDS49670	Issue AIP Drawing & Document to Structures Detailed Design Team	0d		27-Nov-06 A
SDS50720	Condition Survey	19d	27-Feb-06 A	24-Mar-06 A
St Georges School Footbridge Preliminary Design Milestones		59d	29-Aug-06 A	20-Nov-06 A
A8740	Receipt of tie PD Acceptance	0d		20-Nov-06 A
A8750	Receipt of Alignment Prelim Design Package	0d		12-Oct-06 A
A8760	Receipt of OLE Prelim Design Package	0d		20-Nov-06 A
A8770	Receipt of Approved and Signed AIP Document	0d		29-Aug-06 A
St Georges School Footbridge Structure Detailed Design		113d	22-Jan-07 A	27-Jun-07 A
A8780	Structure Detailed Design and Assessment	14d	22-Jan-07 A	09-Feb-07 A
A8790	Structure Detailed Design Draughting	19d	31-Jan-07 A	27-Feb-07 A
A8800	Issue Structure Detailed Design Package to CAT I Checker	0d		27-Feb-07 A
A8810	Structure CAT I Check	37d	12-Mar-07 A	08-May-07 A
A8820	Receive and Incoporate CAT I Comments	27d	26-Mar-07 A	08-May-07 A
A8830	Issue Notification Of Completion Letter- St Georges School Footbridge Structure Design Package to tie	0d		27-Jun-07 A
SDS39730	Detailed Design	55d	12-Feb-07 A	08-May-07 A
SDS61960	IDC	9d	14-May-07 A	25-May-07 A
SDS63820	Prepare Planning Drawings	9d	11-Jun-07 A	22-Jun-07 A
Issue St Georges School Footbridge Structure Design Package For Construction / Fabrication		0d	25-Feb-08	25-Feb-08
A8910	Issue St Georges School Footbridge Structure Design Package For Construction / Fabrication	0d		25-Feb-08
RAD - CRA		986d	19-Sep-05 A	28-Jul-09
CON-0460	Requirements Definition (Contract Dates)	62d	19-Sep-05 A	19-Dec-05 A
Tram Stop Craigleith (Task500.2.8)		815d	16-May-06 A	28-Jul-09
A25560	Prepare Tram Stop Planning Submission Drawings for Issue to Planning Drawings Team	96d	09-Feb-07 A	06-Jul-07 A
A25570	Produce Engineering Detailed Design Drawings	14d	10-Jul-07 A	30-Jul-07 A
A25600	Issue Notification Of Completion Letter- Craigleith Tram Stop Design to tie	0d		30-Jul-07 A
A26180	Compile Planning Drawings Tram Stop Craigleith	19d	03-Jul-07 A	30-Jul-07 A
A26220	Tram Stop Design Complete - Drawings Issued for Construction	0d		08-Apr-08
A27530	Site Visit with tie & CEC To Review Preliminary Design	1d	22-Jan-07 A	22-Jan-07 A
A43540	IDC Tram Stop Design for Planning Submission (Inc. Systems Asssurance)	9d	30-Jan-07 A	12-Feb-07 A
A44840	Prepare Detailed Design Stop Drawings	43d	17-Nov-06 A	29-Jan-07 A
A47640	Produce As Built Drawings	200d	03-Oct-08	28-Jul-09
A47650	Receive Final As Built Data from the Contractor	0d		30-Jun-09
A47660	Receive First As Built Data from the Contractor	0d		01-Oct-08*
A47670	Issue Final As Built Drawings	0d		28-Jul-09
A4870	General Arrangement Drawings	31d	16-May-06 A	30-Jun-06 A
A5380	Issue Tram Stop GA Drawings for Craigleith	0d		30-Jun-06 A
SDS68290	Advanced Tram Stop Works	2d	10-Oct-06 A	11-Oct-06 A
SDS81100	Address tie and CEC Comments, Other Revisions and IDC	24d	02-Nov-07 A	07-Dec-07 A
Structures		567d	30-Jan-06 A	22-Apr-08
S05 Ravelston Dykes Bridge		562d	06-Feb-06 A	22-Apr-08
SDS49680	Review of Previous Work	9d	06-Feb-06 A	17-Feb-06 A
SDS49690	Optioneering	5d	20-Mar-06 A	24-Mar-06 A
SDS49700	Initial Design	9d	27-Mar-06 A	07-Apr-06 A
SDS49710	Production of AIP Drawing	5d	03-Apr-06 A	07-Apr-06 A
SDS49720	Issue AIP Drawing to tie	0d		13-Apr-06 A
SDS49730	Checking	4d	10-Apr-06 A	13-Apr-06 A
SDS49740	tie AIP Drawing Review Period	5d	14-Apr-06 A	24-Apr-06 A
SDS49750	Undertake Consultations	8d	10-Apr-06 A	21-Apr-06 A
SDS49760	Receive AIP Drawing Comments from tie	0d		24-Apr-06 A
SDS49770	Incorporate tie Comments into AIP Drawing	5d	25-Apr-06 A	02-May-06 A
SDS49780	Production of AIP Document	17d	03-May-06 A	26-May-06 A
SDS49790	Issue Ravelston Dykes Bridge AIP Document to tie	0d		30-Jun-06 A
SDS49800	tie AIP Document Review Period	5d	14-Aug-06 A	18-Aug-06 A
SDS49810	Receive AIP Document Comments from tie	0d		18-Aug-06 A
SDS49820	Incorporate tie Comments into AIP Document	5d	21-Aug-06 A	25-Aug-06 A
SDS49830	Issue AIP Document & Drawing to TAA	0d		25-Aug-06 A
SDS49840	TAA AIP Document & Drawing Review Period	5d	20-Nov-06 A	24-Nov-06 A
SDS49850	Issue AIP Document & Drawing to Planning Department	0d		11-Jul-06 A
SDS49860	Planning Department AIP Document & Drawing Review Period	32d	11-Jul-06 A	28-Aug-06 A
SDS49870	Recieve AIP Document & Drawing Comments from TAA	0d		15-Jan-07 A
SDS49880	Incorporate TAA Comments into AIP Document & Drawing	5d	24-Nov-06 A	30-Nov-06 A
SDS49890	Recieve AIP Document & Drawing Comments from Planning Department	0d		24-Nov-06 A
SDS49900	Incorporate Planning Department TAA Comments into AIP Document & Drawing	5d	20-Nov-06 A	24-Nov-06 A
SDS49910	Issue AIP Drawing & Document to Structures Detailed Design Team	0d		01-Dec-06 A
SDS50730	Condition Survey	19d	20-Feb-06 A	17-Mar-06 A
Ravelston Dykes Bridge Preliminary Design Milestones		74d	29-Aug-06 A	11-Dec-06 A
A8920	Receipt of tie PD Acceptance	0d		20-Nov-06 A
A8930	Receipt of Alignment Prelim Design Package	0d		12-Oct-06 A
A8940	Receipt of OLE Prelim Design Package	0d		20-Nov-06 A
A8950	Receipt of Approved and Signed AIP Document	0d		29-Aug-06 A
A8960	Receipt of Ground Investigation Data and Intepretative Data	0d		11-Dec-06 A
Ravelston Dykes Bridge Structure Detailed Design		196d	18-Sep-06 A	27-Jun-07 A
A8970	Structure Detailed Design	70d	18-Sep-06 A	08-Jan-07 A
A8980	Structure Detailed Design Draughting	36d	08-Nov-06 A	08-Jan-07 A
A8990	Issue Structure Detailed Design Package to CAT I Checker	0d		08-Jan-07 A
A9000	Structure CAT I Check	9d	09-Jan-07 A	22-Jan-07 A
A9010	Receive and Incoporate CAT I Comments	9d	23-Jan-07 A	05-Feb-07 A
A9020	Issue Notification Of Completion Letter- Ravelston Dykes Bridge Structure Design Package to tie	0d		27-Jun-07 A
SDS39780	Detailed Design Resourcing	159d	18-Sep-06 A	24-May-07 A
SDS61970	IDC	21d	22-Feb-07 A	23-Mar-07 A
SDS63830	Prepare Planning Drawings	9d	11-Jun-07 A	22-Jun-07 A
Issue Ravelston Dykes Structure Design Package For Construction / Fabrication		0d	22-Apr-08	22-Apr-08
A9100	Issue Ravelston Dykes Structure Design Package For Construction / Fabrication	0d		22-Apr-08
S06 Craigleith Drive Bridge		527d	30-Jan-06 A	25-Feb-08
SDS47520	Review of Previous Work	9d	30-Jan-06 A	10-Feb-06 A
SDS47530	Optioneering	5d	13-Mar-06 A	17-Mar-06 A
SDS47540	Initial Design	9d	20-Mar-06 A	31-Mar-06 A
SDS47550	Production of AIP Drawing	35d	27-Mar-06 A	19-May-06 A
SDS47560	Issue AIP Drawing to tie	0d		19-May-06 A
SDS47570	Checking	30d	03-Apr-06 A	19-May-06 A
SDS47580	tie AIP Drawing Review Period	6d	19-May-06 A	26-May-06 A
SDS47590	Undertake Consultations	18d	15-May-06 A	09-Jun-06 A
SDS47600	Receive AIP Drawing Comments from tie	0d		26-May-06 A
SDS47610	Incorporate tie Comments into AIP Drawing	4d	30-May-06 A	02-Jun-06 A
SDS47620	Production of AIP Document	4d	12-Jun-06 A	15-Jun-06 A
SDS47630	Issue Craigleith Drive Bridge AIP Document to tie	0d		30-Jun-06 A
SDS47640	tie AIP Document Review Period	5d	14-Aug-06 A	18-Aug-06 A
SDS47650	Receive AIP Document Comments from tie	0d		18-Aug-06 A
SDS47660	Incorporate tie Comments into AIP Document	4d	21-Aug-06 A	24-Aug-06 A
SDS47670	Issue AIP Document & Drawing to TAA	0d		24-Aug-06 A
SDS47680	TAA AIP Document & Drawing Review Period	2d	24-Aug-06 A	28-Aug-06 A
SDS47690	Issue AIP Document & Drawing to Planning Department	0d		11-Jul-06 A
SDS47700	Planning Department AIP Document & Drawing Review Period	32d	11-Jul-06 A	28-Aug-06 A

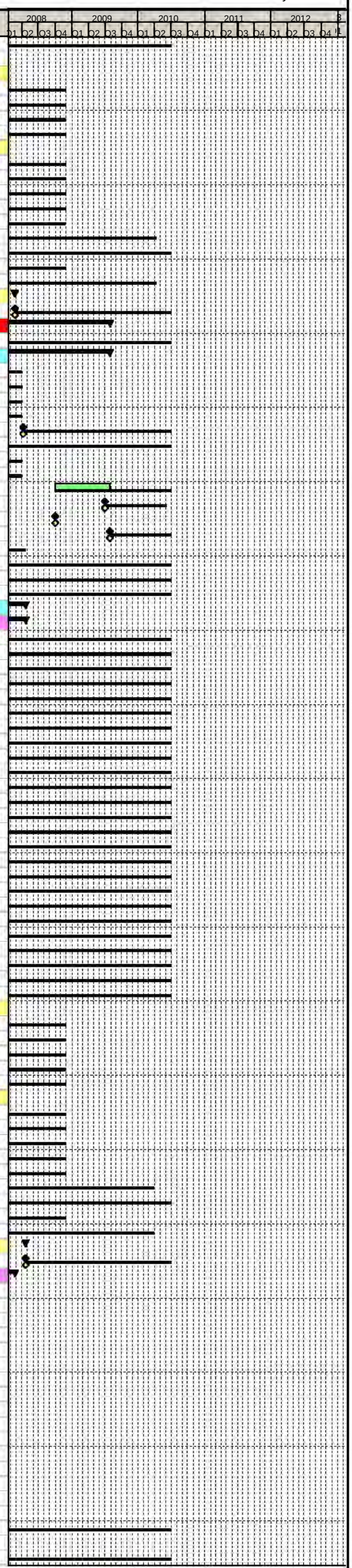

Primary Baseline
Actual Work
Remaining Work
Critical Remaining Work
Baseline Milestone
Milestone

Trams for Edinburgh
...connecting our Capital

Edinburgh Tram Project

SDS FULL DESIGN PROGRAMME @ V26

tie

Activity ID	Activity Name	Original Duration	Start	Finish
SDS47710	Recieve AIP Document & Drawing Comments from TAA	0d		08-Jan-07 A
SDS47720	Incorporate TAA Comments into AIP Document & Drawing	5d	09-Jan-07 A	15-Jan-07 A
SDS47730	Recieve AIP Document & Drawing Comments from Planning Department	0d		15-Jan-07 A
SDS47740	Incorporate Planning Department TAA Comments into AIP Document & Drawing	10d	09-Jan-07 A	23-Jan-07 A
SDS47750	Issue AIP Drawing & Document to Structures Detailed Design Team	0d		15-Jan-07 A
SDS50640	Condition Survey	19d	13-Feb-06 A	10-Mar-06 A
Craigleith Drive Bridge Preliminary Design Milestones		60d	12-Oct-06 A	15-Jan-07 A
A9110	Receipt of tie PD Acceptance	0d		15-Jan-07 A
A9120	Receipt of Alignment Prelim Design Package	0d		12-Oct-06 A
A9140	Receipt of Approved and Signed AIP Document	0d		15-Jan-07 A
A9150	Receipt of Ground Investigation Data and Intepretative Geotechnical Data	0d		08-Dec-06 A
Craigleith Drive Bridge Structure Detailed Design		221d	14-Aug-06 A	27-Jun-07 A
A9160	Structure Assessment and Detailed Design	108d	14-Aug-06 A	30-Jan-07 A
A9170	Structure Detailed Design Draughting	76d	30-Oct-06 A	27-Feb-07 A
A9180	Issue Structure Detailed Design Package to CAT II Checker	0d		27-Feb-07 A
A9190	Structure CAT II Check	54d	28-Feb-07 A	23-May-07 A
A9200	Receive and Incoporate CAT II Comments	38d	26-Mar-07 A	23-May-07 A
A9210	Issue Notification Of Completion Letter- Craigleith Drive Bridge Structure Design Package to tie	0d		27-Jun-07 A
SDS31690	Detailed Design Resourcing	149d	02-Oct-06 A	23-May-07 A
SDS61980	IDC	9d	04-Jun-07 A	15-Jun-07 A
SDS63840	Prepare Planning Drawings	9d	11-Jun-07 A	22-Jun-07 A
Issue Craigleith Drive Bridge Structure Design Package For Construction / Fabrication		0d	25-Feb-08	25-Feb-08
A9290	Issue Craigleith Drive Bridge Structure Design Package For Construction / Fabrication	0d		25-Feb-08
S07 Holiday Inn Access Bridge		517d	13-Feb-06 A	25-Feb-08
SDS49200	Review of Previous Work	9d	13-Feb-06 A	24-Feb-06 A
SDS49210	Optioneering	5d	20-Mar-06 A	24-Mar-06 A
SDS49220	Initial Design	8d	27-Mar-06 A	06-Apr-06 A
SDS49230	Production of AIP Drawing	35d	03-Apr-06 A	26-May-06 A
SDS49240	Issue AIP Drawing to tie	0d		26-May-06 A
SDS49250	Checking	31d	07-Apr-06 A	26-May-06 A
SDS49260	tie AIP Drawing Review Period	4d	30-May-06 A	02-Jun-06 A
SDS49270	Undertake Consultations	48d	07-Apr-06 A	22-Jun-06 A
SDS49280	Receive AIP Drawing Comments from tie	0d		02-Jun-06 A
SDS49290	Incorporate tie Comments into AIP Drawing	5d	05-Jun-06 A	09-Jun-06 A
SDS49300	Production of AIP Document	2d	12-Jun-06 A	13-Jun-06 A
SDS49310	Issue Holiday Inn Access Bridge AIP Document to tie	0d		06-Jun-06 A
SDS49320	tie AIP Document Review Period	2d	14-Jun-06 A	15-Jun-06 A
SDS49330	Receive AIP Document Comments from tie	0d		19-Jun-06 A
SDS49340	Incorporate tie Comments into AIP Document	9d	16-Jun-06 A	29-Jun-06 A
SDS49350	Issue AIP Document & Drawing to TAA	0d		14-Aug-06 A
SDS49360	TAA AIP Document & Drawing Review Period	9d	14-Aug-06 A	28-Aug-06 A
SDS49370	Issue AIP Document & Drawing to Planning Department	0d		11-Jul-06 A
SDS49380	Planning Department AIP Document & Drawing Review Period	93d	11-Jul-06 A	27-Nov-06 A
SDS49390	Recieve AIP Document & Drawing Comments from TAA	0d		20-Nov-06 A
SDS49400	Incorporate TAA Comments into AIP Document & Drawing	5d	20-Nov-06 A	24-Nov-06 A
SDS49410	Recieve AIP Document & Drawing Comments from Planning Department	0d		11-Dec-06 A
SDS49420	Incorporate Planning Department TAA Comments into AIP Document & Drawing	6d	11-Dec-06 A	18-Dec-06 A
SDS49430	Issue AIP Drawing & Document to Structures Detailed Design Team	0d		18-Dec-06 A
SDS50710	Condition Survey	14d	27-Feb-06 A	17-Mar-06 A
Holiday Inn Access Bridge Preliminary Design Milestones		173d	29-Aug-06 A	08-May-07 A
A9410	Receipt of tie PD Acceptance	0d		20-Nov-06 A
A9420	Receipt of Alignment Prelim Design Package	0d		12-Oct-06 A
A9430	Receipt of OLE Prelim Design Package	0d		08-May-07 A
A9600	Receipt of Approved and Signed AIP Document	0d		29-Aug-06 A
A9890	Receipt of Ground Investigation Data and Intepretative Geotechnical Data	0d		11-Dec-06 A
Holiday Inn Access Bridge Structure Detailed Design		122d	09-Jan-07 A	27-Jun-07 A
A9610	Structure Detailed Design	8d	09-Jan-07 A	19-Jan-07 A
A9620	Structure Detailed Design Draughting	15d	18-Jan-07 A	08-Feb-07 A
A9790	Issue Structure Detailed Design Package to CAT I Checker	0d		08-Feb-07 A
A9800	Structure CAT I Check	6d	08-Feb-07 A	15-Feb-07 A
A9810	Receive and Incoporate CAT I Comments	6d	16-Feb-07 A	23-Feb-07 A
A9870	Issue Notification Of Completion Letter- Holiday Inn Access Bridge Structure Design Package to tie	0d		27-Jun-07 A
SDS75060	Detailed Design Resourcing	78d	09-Jan-07 A	08-May-07 A
SDS75070	IDC	20d	26-Feb-07 A	26-Mar-07 A
SDS75080	Prepare Planning Drawings	9d	11-May-07 A	25-May-07 A
Issue Holiday Inn Access Bridge Structure Design Package For Construction / Fabrication		0d	25-Feb-08	25-Feb-08
A9880	Issue Holiday Inn Access Bridge Design Package For Construction / Fabrication	0d		25-Feb-08
S08 Queensferry Road Bridge		517d	13-Feb-06 A	25-Feb-08
SDS48240	Review of Previous Work	9d	13-Feb-06 A	25-Feb-06 A
SDS48250	Optioneering	5d	27-Mar-06 A	31-Mar-06 A
SDS48260	Initial Design	8d	03-Apr-06 A	13-Apr-06 A
SDS48270	Production of AIP Drawing	25d	10-Apr-06 A	19-May-06 A
SDS48280	Issue AIP Drawing to tie	0d		22-May-06 A
SDS48290	Checking	26d	18-Apr-06 A	26-May-06 A
SDS48300	tie AIP Drawing Review Period	5d	19-May-06 A	25-May-06 A
SDS48310	Undertake Consultations	26d	18-Apr-06 A	26-May-06 A
SDS48320	Receive AIP Drawing Comments from tie	0d		26-May-06 A
SDS48330	Incorporate tie Comments into AIP Drawing	5d	30-May-06 A	05-Jun-06 A
SDS48340	Production of AIP Document	5d	06-Jun-06 A	12-Jun-06 A
SDS48350	Issue Queensferry Road AIP Document to tie	0d		12-Jun-06 A
SDS48360	tie AIP Document Review Period	3d	13-Jun-06 A	15-Jun-06 A
SDS48370	Receive AIP Document Comments from tie	0d		15-Jun-06 A
SDS48380	Incorporate tie Comments into AIP Document	7d	16-Jun-06 A	26-Jun-06 A
SDS48390	Issue AIP Document & Drawing to TAA	0d		14-Aug-06 A
SDS48400	TAA AIP Document & Drawing Review Period	9d	14-Aug-06 A	28-Aug-06 A
SDS48410	Issue AIP Document & Drawing to Planning Department	0d		26-Jun-06 A
SDS48420	Planning Department AIP Document & Drawing Review Period	42d	26-Jun-06 A	28-Aug-06 A
SDS48430	Recieve AIP Document & Drawing Comments from TAA	0d		20-Nov-06 A
SDS48440	Incorporate TAA Comments into AIP Document & Drawing	5d	20-Nov-06 A	24-Nov-06 A
SDS48450	Recieve AIP Document & Drawing Comments from Planning Department	0d		20-Nov-06 A
SDS48460	Incorporate Planning Department TAA Comments into AIP Document & Drawing	5d	21-Nov-06 A	28-Nov-06 A
SDS48470	Issue AIP Drawing & Document to Structures Detailed Design Team	0d		27-Nov-06 A
SDS50680	Condition Survey	19d	27-Feb-06 A	24-Mar-06 A
Queensferry Road Bridge Preliminary Design Milestones		173d	29-Aug-06 A	08-May-07 A
A9300	Receipt of tie PD Acceptance	0d		20-Nov-06 A
A9310	Receipt of Alignment Prelim Design Package	0d		12-Oct-06 A
A9320	Receipt of OLE Prelim Design Package	0d		08-May-07 A
A9330	Receipt of Approved and Signed AIP Document	0d		29-Aug-06 A
A9340	Receipt of Ground Investigation Data and Intepretative Geotechnical Data	0d		11-Dec-06 A
Queensferry Road Bridge Structure Detailed Design		122d	09-Jan-07 A	27-Jun-07 A
A9350	Structure Detailed Design	8d	09-Jan-07 A	19-Jan-07 A
A9360	Structure Detailed Design Draughting	15d	18-Jan-07 A	08-Feb-07 A
A9370	Issue Structure Detailed Design Package to CAT I Checker	0d		08-Feb-07 A

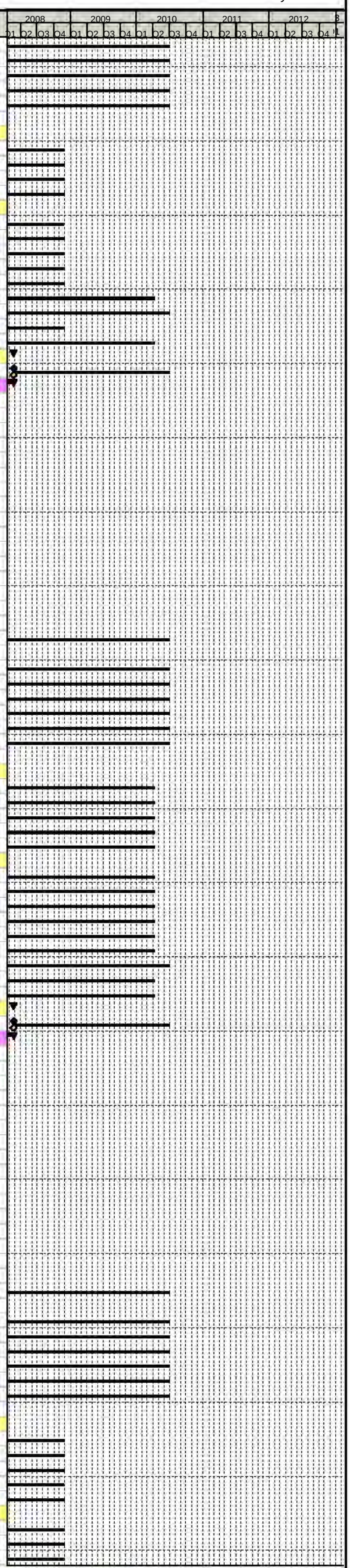

Primary Baseline
Actual Work
Remaining Work
Critical Remaining Work
Baseline Milestone
Milestone

Trams for Edinburgh
...connecting our Capital

Edinburgh Tram Project

SDS FULL DESIGN PROGRAMME @ V26

tie

Activity ID	Activity Name	Original Duration	Start	Finish
A9380	Structure CAT I Check	6d	08-Feb-07 A	15-Feb-07 A
A9390	Receive and Incoporate CAT I Comments	6d	16-Feb-07 A	23-Feb-07 A
A9400	Issue Notification Of Completion Letter- Queensferry Road Bridge Structure Design Package to tie	0d		27-Jun-07 A
SDS39890	Detailed Design Resourcing	78d	09-Jan-07 A	08-May-07 A
SDS61990	IDC	20d	26-Feb-07 A	26-Mar-07 A
SDS63850	Prepare Planning Drawings	9d	11-May-07 A	25-May-07 A
Issue Queensferry Road Structure Design Package For Construction / Fabrication		0d	25-Feb-08	25-Feb-08
A9480	Issue Queensferry Road Structure Design Package For Construction / Fabrication	0d		25-Feb-08
CRA - WGH		986d	19-Sep-05 A	28-Jul-09
CON-0490	Requirements Definition (Contract Dates)	62d	19-Sep-05 A	19-Dec-05 A
Tram Stop Telford Road (Task500.2.9)		800d	06-Jun-06 A	28-Jul-09
A25610	Prepare Tram Stop Planning Submission Drawings for Issue to Planning Drawing Team	96d	05-Feb-07 A	02-Jul-07 A
A25620	Produce Engineering Detailed Design Drawings	9d	17-Jul-07 A	30-Jul-07 A
A25650	Issue Notification Of Completion Letter- Telford Road Tram Stop Design to tie	0d		30-Jul-07 A
A26250	Tram Stop Design Complete - Drawings Issued for Construction	0d		25-Feb-08
A27540	Site Visit with tie & CEC To Review Preliminary Design	1d	19-Jan-07 A	19-Jan-07 A
A43600	IDC Tram Stop Design for Planning Submission (Inc. Systems Asssurance)	9d	22-Jan-07 A	02-Feb-07 A
A44850	Prepare Detailed Design Stop Drawings	38d	17-Nov-06 A	19-Jan-07 A
A47680	Produce As Built Drawings	200d	03-Oct-08	28-Jul-09
A47690	Receive Final As Built Data from the Contractor	0d		30-Jun-09
A47700	Receive First As Built Data from the Contractor	0d		01-Oct-08*
A47710	Issue Final As Built Drawings	0d		28-Jul-09
A4880	General Arrangement Drawings	18d	06-Jun-06 A	30-Jun-06 A
A5390	Issue Tram Stop GA Drawings for Western General Hospital	0d		30-Jun-06 A
SDS81110	Address tie and CEC Comments, Other Revisions and IDC	24d	02-Nov-07 A	07-Dec-07 A
Structures		602d	30-Jan-06 A	10-Jun-08
S09 Groathill Road South Bridge		527d	30-Jan-06 A	25-Feb-08
SDS47760	Review of Previous Work	9d	30-Jan-06 A	10-Feb-06 A
SDS47770	Optioneering	5d	13-Mar-06 A	17-Mar-06 A
SDS47780	Initial Design	14d	20-Mar-06 A	07-Apr-06 A
SDS47790	Production of AIP Drawing	35d	27-Mar-06 A	19-May-06 A
SDS47800	Issue AIP Drawing to tie	0d		19-May-06 A
SDS47810	Checking	25d	10-Apr-06 A	19-May-06 A
SDS47820	tie AIP Drawing Review Period	6d	19-May-06 A	26-May-06 A
SDS47830	Undertake Consultations	18d	15-May-06 A	09-Jun-06 A
SDS47840	Receive AIP Drawing Comments from tie	0d		26-May-06 A
SDS47850	Incorporate tie Comments into AIP Drawing	4d	30-May-06 A	02-Jun-06 A
SDS47860	Production of AIP Document	4d	12-Jun-06 A	15-Jun-06 A
SDS47870	Issue Groathill Road South Bridge AIP Document to tie	0d		30-Jun-06 A
SDS47880	tie AIP Document Review Period	5d	14-Aug-06 A	18-Aug-06 A
SDS47890	Receive AIP Document Comments from tie	0d		18-Aug-06 A
SDS47900	Incorporate tie Comments into AIP Document	4d	21-Aug-06 A	24-Aug-06 A
SDS47910	Issue AIP Document & Drawing to TAA	0d		24-Aug-06 A
SDS47920	TAA AIP Document & Drawing Review Period	2d	24-Aug-06 A	28-Aug-06 A
SDS47930	Issue AIP Document & Drawing to Planning Department	0d		11-Jul-06 A
SDS47940	Planning Department AIP Document & Drawing Review Period	32d	11-Jul-06 A	28-Aug-06 A
SDS47950	Recieve AIP Document & Drawing Comments from TAA	0d		20-Nov-06 A
SDS47960	Incorporate TAA Comments into AIP Document & Drawing	5d	17-Nov-06 A	24-Nov-06 A
SDS47970	Recieve AIP Document & Drawing Comments from Planning Department	0d		20-Nov-06 A
SDS47980	Incorporate Planning Department TAA Comments into AIP Document & Drawing	5d	20-Nov-06 A	27-Nov-06 A
SDS47990	Issue AIP Drawing & Document to Structures Detailed Design Team	0d		27-Nov-06 A
SDS50650	Condition Survey	50d	13-Feb-06 A	28-Apr-06 A
Groathill Road South Bridge Preliminary Design Milestones		42d	12-Oct-06 A	11-Dec-06 A
A9490	Receipt of tie PD Acceptance	0d		20-Nov-06 A
A9500	Receipt of Alignment Prelim Design Package	0d		12-Oct-06 A
A9520	Receipt of Approved and Signed AIP Document	0d		23-Oct-06 A
A9530	Receipt of Ground Investigation Data and Intepretative Geotechnical Data	0d		11-Dec-06 A
Groathill Road South Bridge Structure Detailed Design		166d	30-Oct-06 A	27-Jun-07 A
A9540	Structure Assessment and Detailed Design	58d	30-Oct-06 A	31-Jan-07 A
A9550	Structure Detailed Design Draughting	66d	14-Nov-06 A	27-Feb-07 A
A9560	Issue Structure Detailed Design Package to CAT II Checker	0d		27-Feb-07 A
A9570	Structure CAT II Check	59d	28-Feb-07 A	31-May-07 A
A9580	Receive and Incoporate CAT II Comments	42d	26-Mar-07 A	31-May-07 A
A9590	Issue Notification Of Completion Letter- Groathill Road South Bridge Structure Design Package to tie	0d		27-Jun-07 A
SDS31720	Detailed Design	135d	30-Oct-06 A	31-May-07 A
SDS62000	IDC	9d	04-Jun-07 A	15-Jun-07 A
SDS63860	Prepare Planning Drawings	9d	11-Jun-07 A	22-Jun-07 A
Issue Groathill Road South Bridge Structure Design Package For Construction / Fabrication		0d	25-Feb-08	25-Feb-08
A9670	Issue Groathill Road South Bridge Structure Design Package For Construction / Fabrication	0d		25-Feb-08
S10 Telford Road Bridge		597d	06-Feb-06 A	10-Jun-08
SDS48720	Review of Previous Work	9d	06-Feb-06 A	17-Feb-06 A
SDS48730	Optioneering	5d	20-Mar-06 A	24-Mar-06 A
SDS48740	Initial Design	9d	27-Mar-06 A	07-Apr-06 A
SDS48750	Production of AIP Drawing	5d	03-Apr-06 A	07-Apr-06 A
SDS48760	Issue AIP Drawing to tie	0d		13-Apr-06 A
SDS48770	Checking	4d	10-Apr-06 A	13-Apr-06 A
SDS48780	tie AIP Drawing Review Period	4d	14-Apr-06 A	21-Apr-06 A
SDS48790	Undertake Consultations	8d	10-Apr-06 A	21-Apr-06 A
SDS48800	Receive AIP Drawing Comments from tie	0d		24-Apr-06 A
SDS48810	Incorporate tie Comments into AIP Drawing	4d	24-Apr-06 A	28-Apr-06 A
SDS48820	Production of AIP Document	19d	28-Apr-06 A	26-May-06 A
SDS48830	Issue AIP Document to tie	0d		30-Jun-06 A
SDS48840	tie AIP Document Review Period	4d	14-Aug-06 A	17-Aug-06 A
SDS48850	Receive AIP Document Comments from tie	0d		17-Aug-06 A
SDS48860	Incorporate tie Comments into AIP Document	1d	18-Aug-06 A	18-Aug-06 A
SDS48870	Issue AIP Document & Drawing to TAA	0d		18-Aug-06 A
SDS48880	TAA AIP Document & Drawing Review Period	6d	18-Aug-06 A	28-Aug-06 A
SDS48890	Issue AIP Document & Drawing to Planning Department	0d		11-Jul-06 A
SDS48900	Planning Department AIP Document & Drawing Review Period	32d	11-Jul-06 A	28-Aug-06 A
SDS48910	Recieve AIP Document & Drawing Comments from TAA	0d		20-Nov-06 A
SDS48920	Incorporate TAA Comments into AIP Document & Drawing	5d	20-Nov-06 A	27-Nov-06 A
SDS48930	Recieve AIP Document & Drawing Comments from Planning Department	0d		20-Nov-06 A
SDS48940	Incorporate Planning Department TAA Comments into AIP Document & Drawing	5d	20-Nov-06 A	27-Nov-06 A
SDS48950	Issue AIP Drawing & Document to Structures Detailed Design Team	0d		29-Nov-06 A
SDS50690	Condition Survey	19d	20-Feb-06 A	17-Mar-06 A
Telford Road Bridge Preliminary Design Milestones		141d	12-Oct-06 A	08-May-07 A
A9680	Receipt of tie PD Acceptance	0d		20-Nov-06 A
A9690	Receipt of Alignment Prelim Design Package	0d		12-Oct-06 A
A9700	Receipt of OLE Prelim Design Package	0d		08-May-07 A
A9710	Receipt of Approved and Signed AIP Document	0d		30-Nov-06 A
A9720	Receipt of Ground Investigation Data and Intepretative Geotechnical Data	0d		11-Dec-06 A
Telford Road Bridge Structure Detailed Design		141d	04-Dec-06 A	27-Jun-07 A
A9730	Structure Detailed Design Resourcing	96d	04-Dec-06 A	04-May-07 A

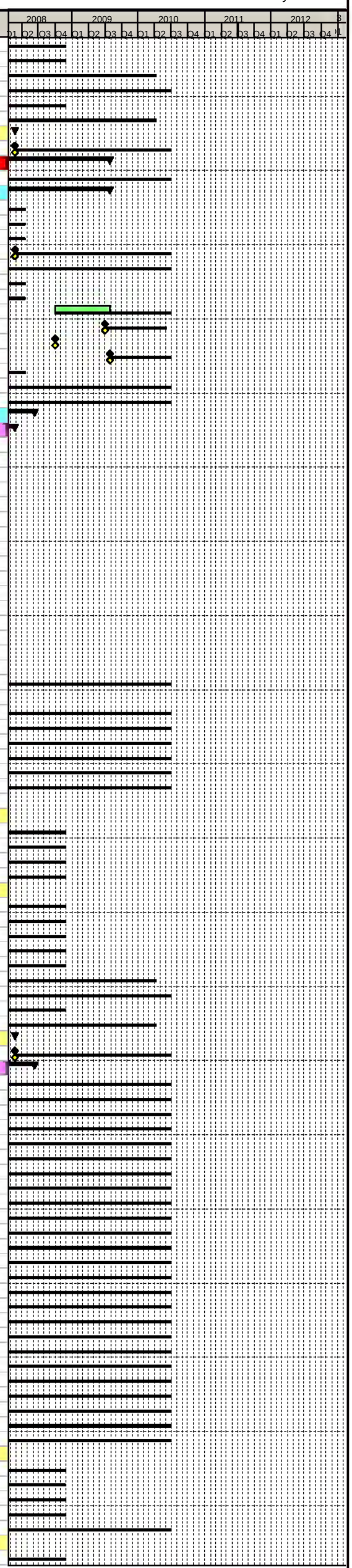

Primary Baseline
Actual Work
Remaining Work
Critical Remaining Work
Baseline Milestone
Milestone

Trams for Edinburgh ..connecting our Capital

Edinburgh Tram Project

SDS FULL DESIGN PROGRAMME @ V26

tie

Activity ID	Activity Name	Original Duration	Start	Finish
A9740	Structure Detailed Design Draughting	19d	20-Dec-06 A	24-Jan-07 A
A9750	Issue Structure Detailed Design Package to CAT I Checker	0d		24-Jan-07 A
A9760	Structure CAT I Check	9d	25-Jan-07 A	07-Feb-07 A
A9770	Receive and Incoporate CAT I Comments	9d	08-Feb-07 A	21-Feb-07 A
A9780	Issue Notification Of Completion Letter- Telford Road Bridge Structure Design Package to tie	0d		27-Jun-07 A
SDS39950	Detailed Design	91d	04-Dec-06 A	27-Apr-07 A
SDS62010	IDC	10d	12-Mar-07 A	26-Mar-07 A
SDS63870	Prepare Planning Drawings	9d	11-Jun-07 A	22-Jun-07 A
Issue Telford Road Bridge Structure Design Package For Construction / Fabrication		0d	10-Jun-08	10-Jun-08
A9860	Issue Telford Road Bridge Structure Design Package For Construction / Fabrication	0d		10-Jun-08
Tram South Groathill Avenue Substation (Task500.2.10)		403d	15-May-06 A	07-Dec-07 A
A548990	Preliminary Design of Substation	26d	15-May-06 A	19-Jun-06 A
A549460	Detailed Design Civils	82d	10-Apr-07 A	10-Aug-07 A
A549470	Detailed Architecture Design	185d	03-Jul-06 A	16-Apr-07 A
A549480	IDC on Detailed Design (Inc. Systems Assurance)	65d	29-Jan-07 A	08-May-07 A
A549490	Issue Notification Of Completion Letter- Tram South Groathill Avenue Substation Design to tie for Approval	0d		30-Jul-07 A
A549660	Compile Substation Planning Submission	73d	08-May-07 A	24-Aug-07 A
A550060	Substation Consultation Period	23d	19-Jun-06 A	20-Jul-06 A
A550180	Issue of Craigleith Substation Design	0d		20-Jun-06 A
SDS81050	Address tie Comments, Other Revisions, IDC & Section Submission Package	24d	02-Nov-07 A	07-Dec-07 A
WGH - CRT		986d	19-Sep-05 A	28-Jul-09
CON-0520	Requirements Definition (Contract Dates)	62d	19-Sep-05 A	19-Dec-05 A
Tram Stop Crewe Toll for Western General Hospital (Task500.2.11)		816d	15-May-06 A	28-Jul-09
A25660	Prepare Tram Stop Planning Submission Drawings for Issue to Planning Drawings Team	85d	26-Feb-07 A	06-Jul-07 A
A25670	Produce Engineering Detailed Design Drawings	9d	17-Jul-07 A	30-Jul-07 A
A25700	Issue Notification Of Completion Letter- Crewe Toll for Western General Hospital Tram Stop Design to tie	0d		30-Jul-07 A
A26280	Tram Stop Design Complete - Drawings Issued for Construction	0d		18-Apr-08
A27550	Site Visit with tie & CEC To Review Preliminary Design	1d	12-Sep-06 A	12-Sep-06 A
A43660	IDC Tram Stop Design for Planning Submission (Inc. Systems Asssurance)	9d	30-Jan-07 A	12-Feb-07 A
A43670	tie Approval Period	19d	12-Mar-07 A	10-Apr-07 A
A44860	Prepare Detailed Design Stop Drawings	5d	23-Jan-07 A	29-Jan-07 A
A47720	Produce As Built Drawings	200d	03-Oct-08	28-Jul-09
A47730	Receive Final As Built Data from the Contractor	0d		30-Jun-09
A47740	Receive First As Built Data from the Contractor	0d		01-Oct-08*
A47750	Issue Final As Built Drawings	0d		28-Jul-09
A4890	General Arrangement Drawings	32d	15-May-06 A	30-Jun-06 A
A5400	Issue Tram Stop GA Drawings for Crewe Toll	0d		30-Jun-06 A
SDS81080	Address tie and CEC Comments, Other Revisions and IDC	24d	02-Nov-07 A	07-Dec-07 A
Structures		297d	06-Feb-06 A	06-Apr-07 A
S11 Drylaw Drive Bridge		218d	06-Feb-06 A	07-Dec-06 A
SDS48960	Review of Previous Work	9d	06-Feb-06 A	17-Feb-06 A
SDS48970	Optioneering	5d	20-Mar-06 A	24-Mar-06 A
SDS48980	Initial Design	9d	27-Mar-06 A	07-Apr-06 A
SDS48990	Production of AIP Drawing	5d	03-Apr-06 A	07-Apr-06 A
SDS49000	Issue AIP Drawing to tie	0d		13-Apr-06 A
SDS49010	Checking	4d	10-Apr-06 A	13-Apr-06 A
SDS49020	tie AIP Drawing Review Period	20d	14-Apr-06 A	17-May-06 A
SDS49030	Undertake Consultations	23d	10-Apr-06 A	17-May-06 A
SDS49040	Receive AIP Drawing Comments from tie	0d		17-May-06 A
SDS49050	Incorporate tie Comments into AIP Drawing	2d	18-May-06 A	19-May-06 A
SDS49060	Production of AIP Document	8d	19-May-06 A	31-May-06 A
SDS49070	Issue AIP Document to tie	0d		30-Jun-06 A
SDS49080	tie AIP Document Review Period	5d	14-Aug-06 A	18-Aug-06 A
SDS49090	Receive AIP Document Comments from tie	0d		18-Aug-06 A
SDS49100	Incorporate tie Comments into AIP Document	5d	21-Aug-06 A	25-Aug-06 A
SDS49110	Issue AIP Document & Drawing to TAA	0d		25-Aug-06 A
SDS49120	TAA AIP Document & Drawing Review Period	7d	20-Nov-06 A	29-Nov-06 A
SDS49130	Issue AIP Document & Drawing to Planning Department	0d		11-Jul-06 A
SDS49140	Planning Department AIP Document & Drawing Review Period	32d	11-Jul-06 A	28-Aug-06 A
SDS49150	Recieve AIP Document & Drawing Comments from TAA	0d		29-Nov-06 A
SDS49160	Incorporate TAA Comments into AIP Document & Drawing	5d	29-Nov-06 A	06-Dec-06 A
SDS49170	Recieve AIP Document & Drawing Comments from Planning Department	0d		20-Nov-06 A
SDS49180	Incorporate Planning Department TAA Comments into AIP Document & Drawing	5d	20-Nov-06 A	27-Nov-06 A
SDS49190	Issue AIP Drawing & Document to Structures Detailed Design Team	0d		07-Dec-06 A
SDS50700	Condition Survey	19d	20-Feb-06 A	17-Mar-06 A
W02 Ferry Road Retaining Wall		282d	27-Feb-06 A	06-Apr-07 A
SDS49920	Review of Previous Work	9d	27-Feb-06 A	10-Mar-06 A
SDS49930	Optioneering	4d	10-Apr-06 A	13-Apr-06 A
SDS49940	Initial Design	21d	24-Apr-06 A	24-May-06 A
SDS49950	Production of AIP Drawing	21d	24-May-06 A	23-Jun-06 A
SDS49960	Issue Ferry Rd RW AIP Drawing to tie	0d		30-Jun-06 A
SDS49970	Checking	4d	01-Jun-06 A	06-Jun-06 A
SDS49980	tie AIP Drawing Review Period	4d	14-Aug-06 A	17-Aug-06 A
SDS49990	Undertake Consultations	4d	14-Aug-06 A	17-Aug-06 A
SDS50000	Receive AIP Drawing Comments from tie	0d		17-Aug-06 A
SDS50010	Incorporate tie Comments into AIP Drawing	4d	14-Aug-06 A	17-Aug-06 A
SDS50020	Production of AIP Document	4d	14-Aug-06 A	17-Aug-06 A
SDS50030	Issue Ferry Road Retaining Wall AIP Document to tie	0d		17-Aug-06 A
SDS50040	tie AIP Document Review Period	5d	14-Aug-06 A	18-Aug-06 A
SDS50050	Receive AIP Document Comments from tie	0d		18-Aug-06 A
SDS50060	Incorporate tie Comments into AIP Document	4d	15-Aug-06 A	18-Aug-06 A
SDS50070	Issue AIP Document & Drawing to TAA	0d		18-Aug-06 A
SDS50080	TAA AIP Document & Drawing Review Period	5d	21-Aug-06 A	28-Aug-06 A
SDS50090	Issue AIP Document & Drawing to Planning Department	0d		11-Jul-06 A
SDS50100	Planning Department AIP Document & Drawing Review Period	32d	11-Jul-06 A	28-Aug-06 A
SDS50110	Recieve AIP Document & Drawing Comments from TAA	0d		22-Nov-06 A
SDS50120	Incorporate TAA Comments into AIP Document & Drawing	5d	21-Nov-06 A	28-Nov-06 A
SDS50130	Recieve AIP Document & Drawing Comments from Planning Department	0d		20-Nov-06 A
SDS50140	Incorporate Planning Department TAA Comments into AIP Document & Drawing	5d	17-Nov-06 A	24-Nov-06 A
SDS50150	Issue AIP Drawing & Document to Structures Detailed Design Team	0d		27-Nov-06 A
SDS50740	Condition Survey	19d	13-Mar-06 A	07-Apr-06 A
Ferry Road Retaining Wall Structure Detailed Design		63d	09-Jan-07 A	06-Apr-07 A
SDS40050	Detailed Design Resourcing	59d	09-Jan-07 A	06-Apr-07 A
CRT - CAP - Section 3B (Task500.3)		986d	19-Sep-05 A	28-Jul-09
Sub Section Wide		571d	06-Mar-06 A	30-May-08
Sub Section Wide IDC		20d	29-Jan-08	25-Feb-08
A40401	Subsection Wide IDC	19d	29-Jan-08	25-Feb-08
Design Assurance Review		10d	26-Feb-08	10-Mar-08
SDS67970	Produce Design Assurance Statement	9d	26-Feb-08	10-Mar-08
Consents & Approvals		317d	26-Feb-07 A	22-May-08
Prior Approvals		315d	26-Feb-07 A	21-May-08
Combined Section Prior Approval		60d	27-Feb-08	21-May-08
A25580	Issue Combined Package 3B for Prior Approval to CEC	0d		27-Feb-08

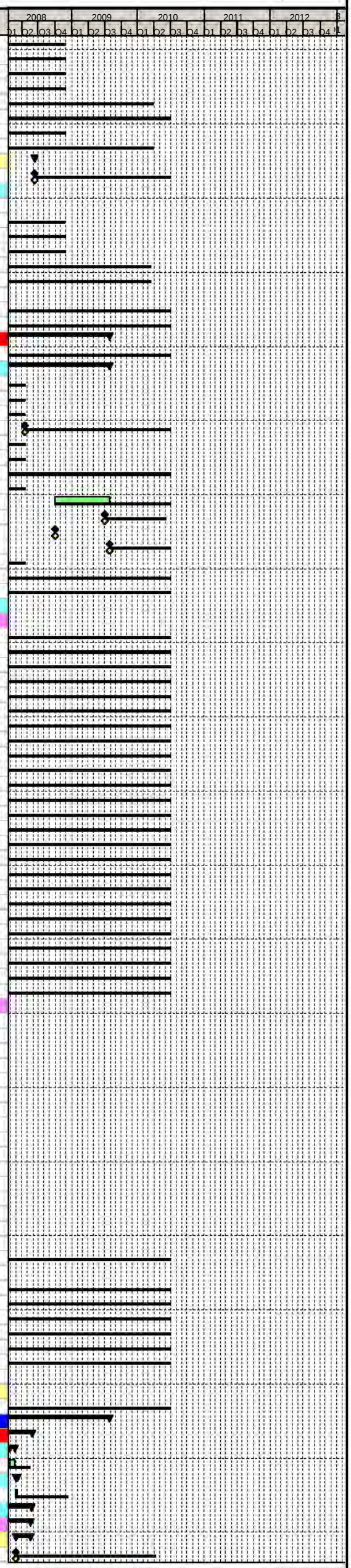

Primary Baseline
Actual Work
Remaining Work
Critical Remaining Work
Baseline Milestone
Milestone

Trams for Edinburgh
connecting our Capital

Edinburgh Tram Project

SDS FULL DESIGN PROGRAMME @ V26

tie

Activity ID	Activity Name	Original Duration	Start	Finish
A25590	Receive Combined Package 3B Comments From CEC	0d		23-Apr-08
A25630	Prior Approval Granted for Section 3B Combined Package	0d		21-May-08
A40370	CEC Approval Period - 3B Combined Package	38d	27-Feb-08	23-Apr-08
A40390	Update 3B Combined Package to CEC Comments	19d	23-Apr-08	21-May-08
Batch 3/15		183d	27-Jun-07 A	19-Mar-08
SDS77350	Batch 3/15 Formal Approval Period	38d	23-Jan-08	18-Mar-08
SDS77360	Issue Batch 3/15 For Approval to CEC	0d	23-Jan-08*	
SDS77370	Receive CEC Prior Approval For Batch 3/15	0d	19-Mar-08	
SDS77390	Batch 3/15 Crewe Road Gardens Bridge - Collation of Planning Drawings	134d	27-Jun-07 A	22-Jan-08
Batch 3/16		112d	12-Nov-07 A	25-Apr-08
SDS77410	Batch 3/16 Formal Approval Period	38d	27-Feb-08	24-Apr-08
SDS77420	Issue Batch 3/16 For Approval to CEC	0d	27-Feb-08	
SDS77430	Receive CEC Prior Approval For Batch 3/16	0d	25-Apr-08	
SDS77450	Batch 3/16 West Pilton Tramstop - Collation of Planning Drawings	67d	12-Nov-07 A	26-Feb-08
Batch 3/17		75d	19-Jun-07 A	01-Oct-07 A
A28040	Issue Tram Granton Mains East 15 Substation Design for Prior Approval	0d		10-Aug-07 A
A28050	Prior Approval For Tram Granton Mains East 15 Substation	0d		01-Oct-07 A
A28060	Receive Tram Granton Mains East 15 Substation CEC Comments	0d		01-Oct-07 A
A41220	Batch 3/17 Granton Mains East Substation - Informal Consultation	35d	19-Jun-07 A	08-Aug-07 A
A41230	Tram Granton Mains East 15 Substation CEC Approval Period	34d	10-Aug-07 A	01-Oct-07 A
A45020	NO COMMENTS TO INCORPORATE	1d	01-Oct-07 A	01-Oct-07 A
Batch 3/18		33d	10-Aug-07 A	25-Sep-07 A
SDS81160	Batch 3/18 Formal Approval Period	30d	10-Aug-07 A	25-Sep-07 A
SDS81170	Issue Batch 3/18 For Approval to CEC	0d	10-Aug-07 A	
SDS81180	Receive CEC Prior Approval For Batch 3/18	0d	25-Sep-07 A	
Batch 3/19		77d	18-Sep-07 A	14-Jan-08
SDS77480	Batch 3/19 Formal Approval Period	38d	10-Oct-07 A	04-Dec-07 A
SDS77490	Issue Batch 3/19 For Approval to CEC	0d	11-Oct-07 A	
SDS77500	Receive CEC Prior Approval For Batch 3/19	0d	14-Jan-08*	
SDS77520	Batch 3/19 Caroline Park Tramstop - Collation of Planning Drawings	16d	18-Sep-07 A	10-Oct-07 A
Roads, Track, OLE, Landscaping, Street Lighting		42d	26-Feb-07 A	24-Apr-07 A
SDS27640	Informal Consultation With CEC & tie Over Prior Approval for Roads, Track, OLE, Landscaping and Street Lighting	38d	26-Feb-07 A	24-Apr-07 A
Tram Stop West Pilton		41d	11-May-07 A	06-Jul-07 A
A40590	Informal Consultation With CEC & tie over Prior Approval Tram Stop West Pilton	38d	11-May-07 A	06-Jul-07 A
Tram Stop Caroline Park		44d	03-Apr-07 A	01-Jun-07 A
A40620	Informal Consultation With CEC & tie over Prior Approval Tram Stop Caroline Park	38d	03-Apr-07 A	01-Jun-07 A
Technical Approvals		292d	02-Apr-07 A	22-May-08
Crewe Road Gardens Bridge Review Period (TAA)		119d	08-May-07 A	19-Oct-07 A
A10200	Issue Crewe Road Gardens Design Package to TAA	0d		14-Jun-07 A
A10210	TAA Crewe Road Gardens Design Package Review Period	38d	15-Jun-07 A	09-Aug-07 A
A10220	Receive Crewe Road Gardens Design Package Comments from TAA	0d		05-Oct-07 A
A10230	Incorporate TAA Comments into Crewe Road Gardens Design Package	9d	08-Oct-07 A	19-Oct-07 A
A13040	Commence Crewe Road Gardens Informal Consultation With CEC Over Technical Approval	25d	08-May-07 A	14-Jun-07 A
Roads Technical Approval		292d	02-Apr-07 A	22-May-08
SDS27650	Issue Roads Design to Roads Authority for Approval	0d		25-Feb-08
SDS27660	Roads Authority Approval Period	38d	26-Feb-08	23-Apr-08
SDS27670	Receive Roads Authority Comments	0d		23-Apr-08
SDS27680	Update to Roads Authority Comments	19d	24-Apr-08	22-May-08
SDS27690	Roads Authority Informal Consultation	38d	02-Apr-07 A	31-May-07 A
SDS27760	Roads Technical Approval Granted	0d		22-May-08
Drainage Technical Approval		276d	02-Apr-07 A	30-Apr-08
SDS72660	Roads Authority Informal Consultation For Drainage	38d	02-Apr-07 A	31-May-07 A
SDS72670	Issue Drainage Design to Roads Authority for Approval	0d		25-Feb-08
SDS72680	Roads Authority Approval Period For Drainage	38d	26-Feb-08	23-Apr-08
SDS72690	Receive Roads Authority Comments For Drainage	0d		23-Apr-08
SDS72700	Update to Roads Authority Comments For Drainage	5d	24-Apr-08	30-Apr-08
SDS72710	Drainage Technical Approval Granted	0d		30-Apr-08
Roads, Street Lighting & Landscaping (Task500.3.2)		564d	07-Mar-06 A	22-May-08
A3030	Route Appreciation/Junct Layout & Determine with tie & CEC Works Extent	3d	15-May-06 A	17-May-06 A
A3040	Frontage Surveys	30d	07-Mar-06 A	21-Apr-06 A
A3050	Set Up Mx Models	3d	05-May-06 A	09-May-06 A
A3060	Produce Preliminary Horizontal Road Alignment Design (Inc Lanes & Parking Zones)	7d	18-May-06 A	26-May-06 A
A3070	Preliminary Rd Junction Configuration Design	2d	30-May-06 A	31-May-06 A
A3080	Preliminary Road Safety Audit	1d	19-Jun-06 A	19-Jun-06 A
A3090	Review & Amend TRO Drawings & Schedules for Modifications Required Post Prelim Design	2d	12-Jun-06 A	13-Jun-06 A
A3100	Handover Alignment Design Roads to Pway	0d		20-Jun-06 A
A3110	Coordination Meeting/Workshop Between Roads & Pway Teams	1d	20-Jun-06 A	20-Jun-06 A
A5510	Undertake Road Marking, Pedestrian Req & Traffic Signalling Design	2d	01-Jun-06 A	02-Jun-06 A
SDS27370	Produce First Pass Vertical Alignment	3d	01-Feb-07 A	05-Feb-07 A
SDS27390	Handover Alignment Design Roads to Pway	0d		05-Feb-07 A
SDS27420	Revise Vertical Alignment to Match Final Track Alignment	5d	19-Feb-07 A	23-Feb-07 A
SDS27430	Horizontal & Vertical Alignment Design Complete	0d		23-Feb-07 A
SDS27440	Issue Roads Design to tie for Approval Section 3B	0d		26-Apr-07 A
SDS27450	Cross Check all Horizontal Design Aspects With Vertical Alignment	2d	09-Mar-07 A	12-Mar-07 A
SDS27490	Issue Construction Drawings	0d		22-May-08
SDS27500	Road Safety Audit Stage 2 (Intermediate)	5d	30-Mar-07 A	09-Apr-07 A
SDS27510	Insert Intermediate RSA Comments	5d	13-Apr-07 A	19-Apr-07 A
SDS27520	Produce Site Clearance Drawings & Schedule	3d	16-Feb-07 A	20-Feb-07 A
SDS27530	Produce Fencing, Barriers & Guardrails Design	5d	01-Feb-07 A	07-Feb-07 A
SDS27540	Produce Street Lighting Design (& Liaise With OLE)	23d	19-Mar-07 A	24-Apr-07 A
SDS27550	Produce Traffic Signal Only Ducting	7d	12-Apr-07 A	23-Apr-07 A
SDS27560	Produce Soft Landscaping Design	14d	26-Mar-07 A	17-Apr-07 A
SDS27570	Produce Traffic Signals Layout	23d	01-Feb-07 A	06-Mar-07 A
SDS27580	Produce Traffic Signs Design (Signs, Markings, Signals)	21d	01-Feb-07 A	02-Mar-07 A
SDS27590	Produce Earthworks Design (NOT REQUIRED)	111d	08-May-07 A	22-Oct-07 A
SDS27810	Revise Alignment to Inc. Final Track Horizontal Alignment (Horizontal Design Freeze) & Issue to Substn Designers	9d	18-Jan-07 A	31-Jan-07 A
SDS27820	Produce Kerbs, Footway & Paved Area Design	9d	01-Feb-07 A	14-Feb-07 A
SDS27830	Produce Pavement Design	56d	08-May-07 A	31-Jul-07 A
SDS27840	IDC (Inc. Systems Assurance)	5d	13-Apr-07 A	19-Apr-07 A
SDS56410	Issue Notification Of Completion Letter- Hard & Soft Landscaping Design to tie Section 3B	0d		30-Aug-07 A
SDS56800	Issue Notification Of Completion Letter- Street Lighting Design (Inc. Any OLE Combined Pole Design) to tie Section 3B	0d		26-Apr-07 A
SDS59350	Compile Planning Drawings	6d	17-Apr-07 A	24-Apr-07 A
SDS59750	Advise Track, Stops, Modellers Changes To Accom RSA1 & PD Comments	7d	27-Nov-06 A	05-Dec-06 A
SDS59760	Pass Guidance/Envelope To Track & Others As Necessary	0d		05-Dec-06 A
SDS60900	Revise Horizontal to Inc. Track Horizontal Alignment, RSA1 & PD Comments	5d	03-Jan-07 A	09-Jan-07 A
SDS60910	Revise Alignment to Inc. Minor Changes From Traffic Modelling	4d	10-Jan-07 A	15-Jan-07 A
SDS67290	Street Lighting Survey Work	8d	21-Nov-06 A	30-Nov-06 A
SDS69680	Produce Hard Landscaping Design	98d	02-Apr-07 A	30-Aug-07 A
SDS80020	Final RSA	9d	05-Feb-08	18-Feb-08
SDS80030	Incorporate Final RSA Comments	5d	19-Feb-08	25-Feb-08
Track (Task 500.3.1)		486d	13-Mar-06 A	08-Feb-08
A3000	First Pass Mx Horizontal and Vertical Alignment	48d	13-Mar-06 A	25-May-06 A
A3010	Handover Alignment Design P Way to Roads	0d		26-May-06 A

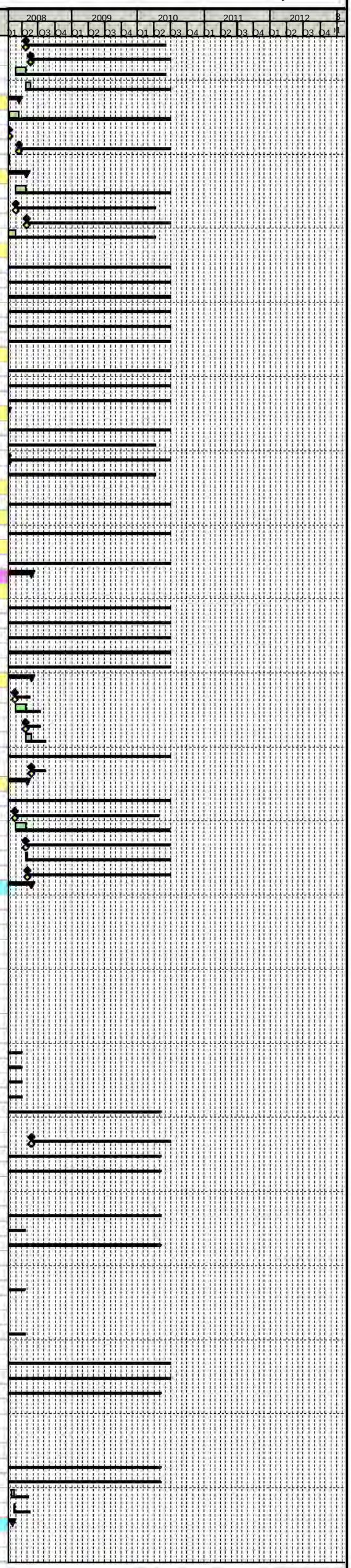

Primary Baseline
Actual Work
Remaining Work
Critical Remaining Work
Baseline Milestone
Milestone

Trams for Edinburgh
...connecting our Capital

Edinburgh Tram Project

SDS FULL DESIGN PROGRAMME @ V26

tie

Activity ID	Activity Name	Original Duration	Start	Finish
A3020	Coordination Meeting/Workshop Between PWay/Roads & Resolution of Major Conflicts	1d	26-May-06 A	26-May-06 A
SDS27360	Revise Alignment to Match Roads First Pass Vertical	6d	09-Feb-07 A	16-Feb-07 A
SDS27410	Handover Alignment Design Track to Roads	0d		16-Feb-07 A
SDS27780	Revise Alignment to Inc. Preliminary Design Comments	98d	17-Jul-06 A	11-Dec-06 A
SDS27800	Handover Alignment Design Track to Roads	0d		11-Dec-06 A
SDS57070	Issue Track Alignment Design to tie Section 3B	0d		09-Mar-07 A
SDS59570	IDC Track Design	8d	26-Feb-07 A	07-Mar-07 A
SDS60920	Revise Track Alignment to Inc. Modelling Changes	2d	16-Jan-07 A	17-Jan-07 A
SDS70420	tie Approval Period	19d	12-Mar-07 A	10-Apr-07 A
SDS70430	Receive tie Comments	0d		20-Apr-07 A
SDS70440	Incorporate tie Comments	1d	04-May-07 A	05-May-07 A
SDS75130	Address tie Comments, Other Revisions, IDC & Section Submission Package	120d	06-Aug-07 A	08-Feb-08
Drainage		254d	12-Mar-07 A	10-Mar-08
SDS71570	Hydraulic Modelling & First Pass Drainage Design	57d	12-Mar-07 A	08-Jun-07 A
SDS71580	Receipt of Drainage Survey Information	0d	25-Feb-08*	
SDS71590	Outfall Consent/Approval from SW	0d		25-Feb-08*
SDS71600	Outfall Consent/Approval from CEC	0d		14-Jan-08*
SDS71610	Outfall Consent/Approval from SEPA	0d		16-Aug-07 A
SDS71620	Compile Drainage Package	5d	02-Oct-07 A	09-Oct-07 A
SDS71630	Issue Drainage Design Completion Letter to tie for Approval Section 3B	0d		11-Oct-07 A
SDS73230	Final Detailed Drainage Design	36d	17-Aug-07 A	10-Oct-07 A
SDS80440	Final Detailed Drainage Design	45d	13-Nov-07 A	25-Jan-08
SDS80450	Compile Drainage Package	2d	25-Jan-08	28-Jan-08
SDS80460	Issue Drainage Design Completion Letter to tie for Approval Section 3B	0d		28-Jan-08
SDS80470	Confirm Drainage and Amend if Required	9d	26-Feb-08	10-Mar-08
Utilities Plates 24 to 33		470d	06-Mar-06 A	14-Jan-08
A11890	Close Out PD Issues & Propose Diversions	41d	29-Aug-06 A	27-Oct-06 A
A11900	Issue PD to SUCs	0d		07-Nov-06 A
A11910	Consult SUCs and MUDFA (at later stage - when appointed)	22d	08-Nov-06 A	08-Dec-06 A
A11920	Access to MUDFA	0d		23-Oct-06 A
A11950	Issue to SUCs	0d		22-Dec-06 A
A11960	SUCs Approval	243d	22-Dec-06 A	14-Jan-08
UTIL090	Section 3B - Pre-Preliminary Design (Utilities)	76d	06-Mar-06 A	30-Jun-06 A
UTIL800	Issue to Statutory Utility Companies (SUCs)	0d		30-Jun-06 A
Boundary & Accomodation Works (Task500.3.3)		95d	26-Mar-07 A	03-Aug-07 A
SDS42130	Detailed Design of Boundary & Accomodation Works	85d	26-Mar-07 A	03-Aug-07 A
SDS42140	Issue Notification Of Completion Letter- Detailed Design of Boundary & Accomodation Works Section 3B	0d		03-Aug-07 A
TRO's		530d	02-May-06 A	30-May-08
SDS33410	Collate Exisiting TROs	48d	02-May-06 A	12-Jul-06 A
SDS33420	Receive Preliminary Roads Design	0d		12-Jul-06 A
SDS82030	Interim TRO Design Section 3B	5d	28-Jan-08*	01-Feb-08
SDS82040	Final TRO Design Section 3B	5d	23-May-08	30-May-08
TTRO's		177d	29-Aug-06 A	11-May-07 A
TTRO300	SDS Produce Affected Roads Listing For MUDFA Works	64d	29-Aug-06 A	30-Nov-06 A
TTRO350	SDS Produce Affected Roads Listing For INFRACO Works	36d	12-Mar-07 A	04-May-07 A
TTRO670	Issue Affected Roads Listing For MUDFA Works To Dundas & Wilson	0d		30-Nov-06 A
TTRO680	Dundas & Wilson Draft TTRO Schedule For MUDFA Works	0d	01-Dec-06 A	01-Dec-06 A
TTRO780	Issue Affected Roads Listing For INFRACO Works To Dundas & Wilson	0d		04-May-07 A
TTRO810	Dundas & Wilson Draft TTRO Schedule For INFRACO Works	5d	04-May-07 A	11-May-07 A
CRT - WGA		986d	19-Sep-05 A	28-Jul-09
CON-0550	Requirements Definition (Contract Dates)	62d	19-Sep-05 A	19-Dec-05 A
Tram Stop West Pilton (Task500.3.7)		800d	06-Jun-06 A	28-Jul-09
A25710	Prepare Tram Stop Planning Submission Drawings for Issue to Planning Drawings Team	62d	25-Apr-07 A	27-Jul-07 A
A25720	Produce Engineering Detailed Design Drawings	9d	17-Jul-07 A	30-Jul-07 A
A25750	Issue Notification Of Completion Letter- West Pilton Tram Stop Design to tie	0d		30-Aug-07 A
A26230	Compile Planning Drawings Tram Stop West Pilton	19d	03-Jul-07 A	30-Jul-07 A
A26310	Tram Stop Design Complete - Drawings Issued for Construction	0d		25-Apr-08
A27560	Site Visit with tie & CEC To Review Preliminary Design	1d	02-Jul-07 A	02-Jul-07 A
A43720	IDC Tram Stop Design for Planning Submission (Inc. Systems Asssurance) ON HOLD	28d	22-Mar-07 A	04-May-07 A
A44870	Prepare Detailed Design Stop Drawings	5d	12-Mar-07 A	19-Mar-07 A
A47760	Produce As Built Drawings	200d	03-Oct-08	28-Jul-09
A47770	Receive Final As Built Data from the Contractor	0d		30-Jun-09
A47780	Receive First As Built Data from the Contractor	0d		01-Oct-08*
A47790	Issue Final As Built Drawings	0d		28-Jul-09
A4900	General Arrangement Drawings	0d	06-Jun-06 A	06-Jun-06 A
A5410	Issue Tram Stop GA Drawings for West Granton Access	0d		30-Jun-06 A
SDS68300	Re Draw Due to Track Changes	1d	20-Oct-06 A	20-Oct-06 A
SDS81120	Address tie and CEC Comments, Other Revisions and IDC	24d	02-Nov-07 A	07-Dec-07 A
Structures		538d	06-Feb-06 A	19-Mar-08
S12 Crewe Road Gardens Bridge		538d	06-Feb-06 A	19-Mar-08
SDS48480	Review of Previous Work	9d	06-Feb-06 A	17-Feb-06 A
SDS48490	Optioneering	5d	20-Mar-06 A	24-Mar-06 A
SDS48500	Initial Design	9d	27-Mar-06 A	07-Apr-06 A
SDS48510	Production of AIP Drawing	35d	03-Apr-06 A	26-May-06 A
SDS48520	Issue Crewe Rd Gardens Bridge AIP Drawing to tie	0d		02-Jun-06 A
SDS48530	Checking	9d	15-May-06 A	26-May-06 A
SDS48540	tie AIP Drawing Review Period	4d	30-May-06 A	02-Jun-06 A
SDS48550	Undertake Consultations	18d	15-May-06 A	09-Jun-06 A
SDS48560	Receive AIP Drawing Comments from tie	0d		02-Jun-06 A
SDS48570	Incorporate tie Comments into AIP Drawing	4d	05-Jun-06 A	08-Jun-06 A
SDS48580	Production of AIP Document	5d	09-Jun-06 A	15-Jun-06 A
SDS48590	Issue Crewe Road Gardens Bridge AIP Document to tie	0d		06-Jun-06 A
SDS48600	tie AIP Document Review Period	3d	14-Jun-06 A	16-Jun-06 A
SDS48610	Receive AIP Document Comments from tie	0d		16-Jun-06 A
SDS48620	Incorporate tie Comments into AIP Document	8d	16-Jun-06 A	28-Jun-06 A
SDS48630	Issue AIP Document & Drawing to TAA	0d		14-Aug-06 A
SDS48640	TAA AIP Document & Drawing Review Period	9d	14-Aug-06 A	28-Aug-06 A
SDS48650	Issue AIP Document & Drawing to Planning Department	0d		06-Jun-06 A
SDS48660	Planning Department AIP Document & Drawing Review Period	38d	29-Jun-06 A	23-Aug-06 A
SDS48670	Recieve AIP Document & Drawing Comments from TAA	0d		11-Dec-06 A
SDS48680	Incorporate TAA Comments into AIP Document & Drawing	20d	11-Dec-06 A	16-Jan-07 A
SDS48690	Recieve AIP Document & Drawing Comments from Planning Department	0d		23-Aug-06 A
SDS48700	Incorporate Planning Department TAA Comments into AIP Document & Drawing	2d	24-Aug-06 A	28-Aug-06 A
SDS48710	Issue AIP Drawing & Document to Structures Detailed Design Team	0d		16-Jan-07 A
SDS50660	Condition Survey	19d	20-Feb-06 A	17-Mar-06 A
Crewe Road Gardens Bridge Preliminary Design Milestones		42d	12-Oct-06 A	11-Dec-06 A
A10060	Receipt of tie PD Acceptance	0d		20-Nov-06 A
A10070	Receipt of Alignment Prelim Design Package	0d		12-Oct-06 A
A10080	Receipt of OLE Prelim Design Package	0d		11-Dec-06 A
A10090	Receipt of Ground Investigation Data and Interpretative Geotechnical Data	0d		23-Oct-06 A
A10100	Receipt of Approved and Signed AIP Document	0d		23-Oct-06 A
Crewe Road Gardens Bridge Superstructure Detailed Design		142d	01-Dec-06 A	27-Jun-07 A
A10110	Superstructure Detailed Design	28d	01-Dec-06 A	19-Jan-07 A

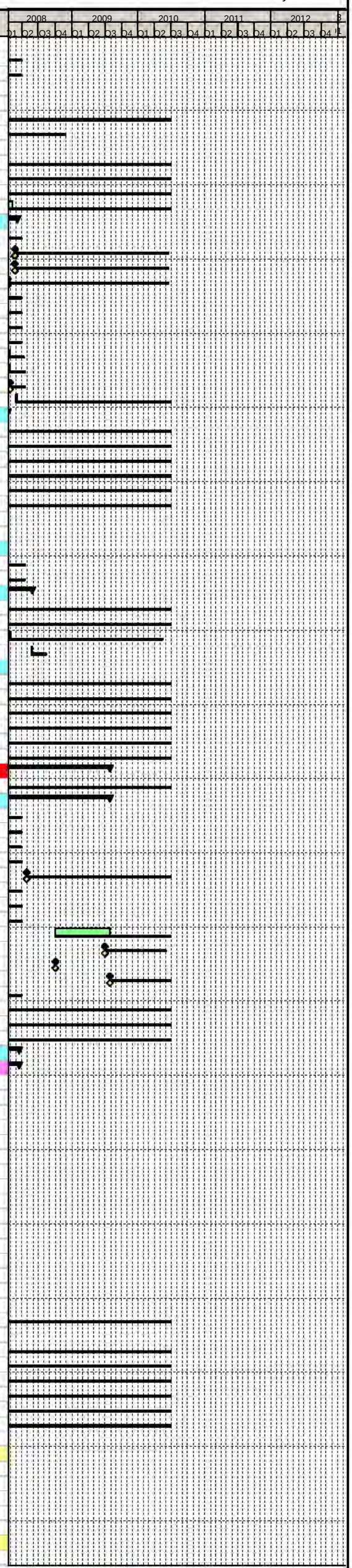

Primary Baseline
Actual Work
Remaining Work
Critical Remaining Work
Baseline Milestone
Milestone

Trams for Edinburgh
connecting our Capital

Edinburgh Tram Project

SDS FULL DESIGN PROGRAMME @ V26

tie

Activity ID	Activity Name	Original Duration	Start	Finish
A10120	Superstructure Detailed Design Draughting	38d	15-Jan-07 A	12-Mar-07 A
A10130	Issue Superstructure Detailed Design Package to CAT II Checker	0d		12-Mar-07 A
A10140	Superstructure CAT II Check	23d	19-Mar-07 A	23-Apr-07 A
A10150	Receive and Incoporate CAT II Comments	5d	24-Apr-07 A	30-Apr-07 A
A10160	Issue Notification Of Completion Letter- Crewe Road Gardens Bridge Superstructure Design Package to tie	0d		27-Jun-07 A
SDS31530	Detailed Design Resourcing	80d	01-Dec-06 A	10-Apr-07 A
SDS62020	IDC	9d	08-May-07 A	21-May-07 A
SDS63890	Prepare Planning Drawings	8d	22-May-07 A	01-Jun-07 A
Issue Crewe Road Gardens Design Package For Construction / Fabrication		0d	19-Mar-08	19-Mar-08
A10240	Issue Crewe Road Design Package For Construction / Fabrication	0d		19-Mar-08
Crewe Road Gardens Bridge Substructure Detailed Design		123d	08-Jan-07 A	27-Jun-07 A
A10250	Substructure Detailed Design	19d	08-Jan-07 A	02-Feb-07 A
A10260	Substructure Detailed Design Draughting	47d	22-Jan-07 A	30-Mar-07 A
A10270	Issue Substructure Detailed Design Package to CAT II Checker	0d		30-Mar-07 A
A10280	Substructure CAT II Check	16d	02-Apr-07 A	26-Apr-07 A
A10290	Receive and Incorporate CAT II Comments	6d	27-Apr-07 A	04-May-07 A
A10300	Issue Notification Of Completion Letter- Crewe Road Gardens Bridge Substructure Detailed Design Package to tie	0d		27-Jun-07 A
WGA - CAP		986d	19-Sep-05 A	28-Jul-09
CON-0580	Requirements Definition (Contract Dates)	62d	19-Sep-05 A	19-Dec-05 A
Tram Stop Caroline Park (Task500.3.8)		795d	13-Jun-06 A	28-Jul-09
A25760	Prepare Tram Stop Planning Submission Drawings for Issue to Planning Drawings Team	62d	25-Apr-07 A	27-Jul-07 A
A25770	Produce Engineering Detailed Design Drawings	9d	17-Jul-07 A	30-Jul-07 A
A26240	Compile Planning Drawings Tram Stop Caroline Park	19d	03-Jul-07 A	30-Jul-07 A
A26340	Issue Notification Of Completion Letter- Caroline Park Tram Stop Design to tie	0d		30-Jul-07 A
A26360	Tram Stop Design Complete - Drawings Issued for Construction	0d		25-Feb-08
A27570	Site Visit with tie & CEC To Review Preliminary Design	1d	02-Jul-07 A	02-Jul-07 A
A43780	IDC Tram Stop Design for Planning Submission (Inc. Systems Asssurance)	23d	30-Mar-07 A	04-May-07 A
A44880	Prepare Detailed Design Stop Drawings	5d	19-Mar-07 A	26-Mar-07 A
A47800	Produce As Built Drawings	200d	03-Oct-08	28-Jul-09
A47810	Receive Final As Built Data from the Contractor	0d		30-Jun-09
A47820	Receive First As Built Data from the Contractor	0d		01-Oct-08*
A47830	Issue Final As Built Drawings	0d		28-Jul-09
A4910	General Arrangement Drawings	0d	13-Jun-06 A	13-Jun-06 A
A5420	Issue Tram Stop GA Drawings for Caroline Park	0d		30-Jun-06 A
SDS81130	Address tie and CEC Comments, Other Revisions and IDC	24d	02-Nov-07 A	07-Dec-07 A
Tram Granton Mains East 15 Substation (Task500.3.9)		423d	17-Apr-06 A	07-Dec-07 A
A549300	Preliminary Design of Substation	44d	17-Apr-06 A	16-Jun-06 A
A549680	Detailed Design Civils	94d	30-Mar-07 A	22-Aug-07 A
A549690	Detailed Architecture Design	112d	16-Oct-06 A	10-Apr-07 A
A550300	IDC on Detailed Design (Inc. Systems Assurance)	10d	08-May-07 A	22-May-07 A
A550310	Issue Notification Of Completion Letter- Tram Granton Mains East 15 Substation Planning Submission to tie for Appro	0d		23-Aug-07 A
A550360	Substation Consultation Period	23d	19-Jun-06 A	20-Jul-06 A
A550370	Issue of Grant Mains East Substation Design	0d		30-Jun-06 A
A550380	Compile Substation Planning Submission	19d	26-Jul-07 A	22-Aug-07 A
SDS81060	Address tie Comments, Other Revisions, IDC & Section Submission Package	24d	02-Nov-07 A	07-Dec-07 A
CAP - GRS - Section 3C (Task500.4)		986d	19-Sep-05 A	28-Jul-09
Sub Section Wide		571d	06-Mar-06 A	30-May-08
Sub Section Wide IDC		20d	29-Jan-08	25-Feb-08
A40461	Subsection Wide IDC	19d	29-Jan-08	25-Feb-08
Design Assurance Review		10d	26-Feb-08	10-Mar-08
SDS67980	Produce Design Assurance Statement	9d	26-Feb-08	10-Mar-08
Consents & Approvals		270d	02-May-07 A	22-May-08
Prior Approvals		265d	03-May-07 A	19-May-08
Combined Section Prior Approval		60d	25-Feb-08	19-May-08
A25640	Issue Combined Package 3C for Prior Approval to CEC	0d		25-Feb-08
A25680	Receive Combined Package 3C Comments From CEC	0d		21-Apr-08
A25690	Prior Approval Granted for Section 3C Combined Package	0d		19-May-08
A40430	CEC Approval Period - 3C Combined Package	38d	25-Feb-08	21-Apr-08
A40450	Update 3C Combined Package to CEC Comments	19d	21-Apr-08	19-May-08
Batch 3/20		185d	30-Jul-07 A	23-Apr-08
SDS77540	Batch 3/20 Formal Approval Period	38d	25-Feb-08	22-Apr-08
SDS77550	Issue Batch 3/20 For Approval to CEC	0d	25-Feb-08	
SDS77560	Receive CEC Prior Approval For Batch 3/20	0d	23-Apr-08	
SDS77580	Batch 3/20 Saltire Square Tramstop - Collation of Planning Drawings	134d	30-Jul-07 A	22-Feb-08
Batch 3/21		52d	11-Feb-08	23-Apr-08
SDS77600	Batch 3/21 Formal Approval Period	38d	25-Feb-08	22-Apr-08
SDS77610	Issue Batch 3/21 For Approval to CEC	0d	25-Feb-08	
SDS77620	Receive CEC Prior Approval For Batch 3/21	0d	23-Apr-08	
SDS77640	Batch 3/21 Granton Tramstop - Collation of Planning Drawings	9d	11-Feb-08*	22-Feb-08
Batch 3/22 Tram Granton View Substation		108d	06-Aug-07 A	14-Jan-08
A28010	Issue Tram Granton View Substation Design for Prior Approval	0d		31-Oct-07 A
A28020	Prior Approval For Tram Granton Road Substation	0d		14-Jan-08
A41200	Informal Consultation With CEC & tie over Prior Approval Tram Granton View Substation	38d	06-Aug-07 A	01-Oct-07 A
A41210	Batch 3/22 Formal Approval Period	38d	31-Oct-07 A	02-Jan-08 A
Roads, Track, OLE, Landscaping, Street Lighting		42d	03-May-07 A	29-Jun-07 A
SDS28130	Informal Consultation With CEC & tie Over Prior Approval for Roads, Track, OLE, Landscaping and Street Lighting	38d	03-May-07 A	29-Jun-07 A
Tram Stop Saltire Square		40d	14-Jan-08	07-Mar-08
A40650	Informal Consultation With CEC & tie over Prior Approval Tram Stop Saltire Square	38d	14-Jan-08	07-Mar-08
Tram Stop Granton		40d	14-Jan-08	07-Mar-08
A40680	Informal Consultation With CEC & tie over Prior Approval Tram Stop Granton	38d	14-Jan-08	07-Mar-08
Technical Approvals		270d	02-May-07 A	22-May-08
Roads Technical Approval		270d	02-May-07 A	22-May-08
SDS28140	Issue Roads Design to Roads Authority for Approval	0d		25-Feb-08
SDS28150	Roads Authority Approval Period	38d	26-Feb-08	23-Apr-08
SDS28160	Receive Roads Authority Comments	0d		23-Apr-08
SDS28170	Update to Roads Authority Comments	19d	24-Apr-08	22-May-08
SDS28180	Roads Authority Informal Consultation	38d	02-May-07 A	28-Jun-07 A
SDS28250	Roads Technical Approval Granted	0d		22-May-08
Drainage Technical Approval		78d	14-Jan-08	30-Apr-08
SDS72720	Roads Authority Informal Consultation For Drainage	38d	14-Jan-08	07-Mar-08
SDS72730	Issue Drainage Design to Roads Authority for Approval	0d		25-Feb-08
SDS72740	Roads Authority Approval Period For Drainage	38d	26-Feb-08	23-Apr-08
SDS72750	Receive Roads Authority Comments For Drainage	0d		23-Apr-08
SDS72760	Update to Roads Authority Comments For Drainage	5d	24-Apr-08	30-Apr-08
SDS72770	Drainage Technical Approval Granted	0d		30-Apr-08
Track (Task500.4.1)		466d	10-Apr-06 A	08-Feb-08
A3130	First Pass Mx Horizontal and Vertical Alignment	32d	10-Apr-06 A	31-May-06 A
A3140	Handover Alignment Design P Way to Roads	0d		01-Jun-06 A
A3150	Coordination Meeting/Workshop Between PWay/Roads & Resolution of Major Conflicts	1d	01-Jun-06 A	01-Jun-06 A
SDS27850	Revise Alignment to Match Roads First Pass Vertical	12d	05-Mar-07 A	21-Mar-07 A
SDS27900	Handover Alignment Design Track to Roads	0d		21-Mar-07 A
SDS28270	Revise Alignment to Inc. Preliminary Design Comments	129d	10-Jul-06 A	26-Jan-07 A
SDS28290	Handover Alignment Design Track to Roads	0d		26-Jan-07 A

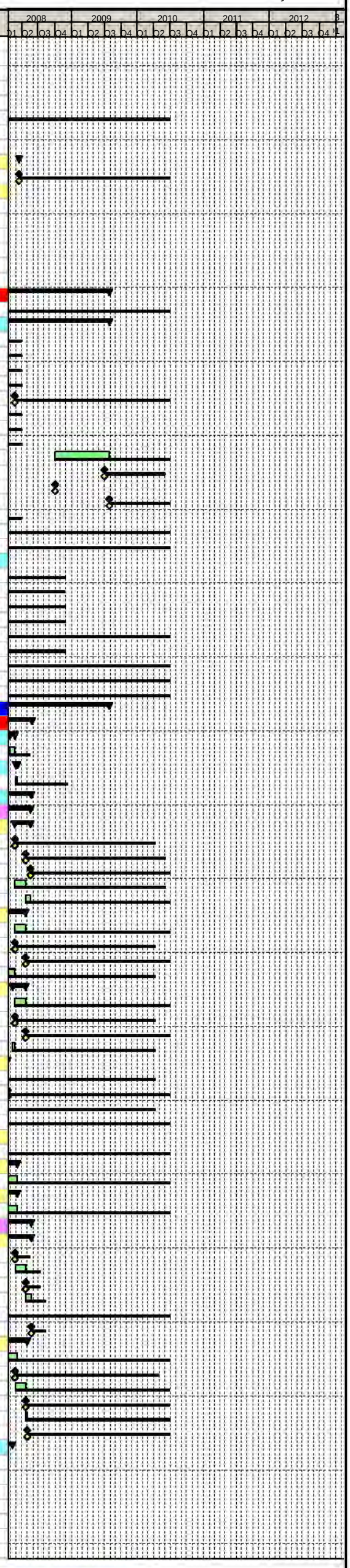

Primary Baseline
Actual Work
Remaining Work
Critical Remaining Work
Baseline Milestone
Milestone

Trams for Edinburgh
connecting our Capital

Edinburgh Tram Project

SDS FULL DESIGN PROGRAMME @ V26

tie

Activity ID	Activity Name	Original Duration	Start	Finish
SDS57080	Issue Notification Of Completion Letter- Track Alignment Design to tie Section 3C	0d		15-Jun-07 A
SDS59580	IDC Track Design	5d	29-Mar-07 A	04-Apr-07 A
SDS60930	Revise Track Alignment to Inc. Modelling Changes	9d	05-Feb-07 A	16-Feb-07 A
SDS75140	Address tie Comments, Other Revisions, IDC & Section Submission Package	120d	06-Aug-07 A	08-Feb-08
Roads, Street Lighting & Landscaping (Task500.4.2)		564d	07-Mar-06 A	22-May-08
A3160	Route Appreciation/Junct Layout & Determine with tie & CEC Works Extent	48d	07-Mar-06 A	19-May-06 A
A3170	Frontage Surveys	1d	19-May-06 A	19-May-06 A
A3180	Set Up Mx Models	4d	17-Apr-06 A	21-Apr-06 A
A3190	Produce Preliminary Horizontal Road Alignment Design (Inc Lanes & Parking Zones)	4d	22-May-06 A	25-May-06 A
A3200	Preliminary Rd Junction Configuration Design	2d	26-May-06 A	30-May-06 A
A3210	Preliminary Road Safety Audit	1d	30-Jun-06 A	30-Jun-06 A
A3220	Review & Amend TRO Drawings & Schedules for Modifications Required Post Prelim Design	3d	12-Jun-06 A	14-Jun-06 A
A3230	Handover Alignment Design Roads to Pway	0d		03-Jul-06 A
A3240	Coordination Meeting/Workshop Between Roads & Pway Teams	1d	03-Jul-06 A	03-Jul-06 A
A5520	Undertake Road Marking, Pedestrian Req & Traffic Signalling Design	2d	31-May-06 A	01-Jun-06 A
SDS27860	Produce First Pass Vertical Alignment	9d	01-Mar-07 A	14-Mar-07 A
SDS27880	Handover Alignment Design Roads to Pway	0d		14-Mar-07 A
SDS27910	Revise Vertical Alignment to Match Final Track Alignment	5d	22-Mar-07 A	28-Mar-07 A
SDS27920	Horizontal & Vertical Alignment Design Complete	0d		28-Mar-07 A
SDS27930	Issue Notification Of Completion Letter- Roads Design to tie for Approval Section 3C	0d		02-Jul-07 A
SDS27940	Cross Check all Horizontal Design Aspects With Vertical Alignment	2d	31-May-07 A	01-Jun-07 A
SDS27980	Issue Construction Drawings	0d		22-May-08
SDS27990	Road Safety Audit Stage 2 (Intermediate)	5d	22-Jun-07 A	29-Jun-07 A
SDS28000	Insert Intermediate RSA Comments	5d	22-Jun-07 A	29-Jun-07 A
SDS28010	Produce Site Clearance Drawings & Schedule	9d	01-Mar-07 A	14-Mar-07 A
SDS28020	Produce Fencing, Barriers & Guardrails Design	9d	01-Mar-07 A	14-Mar-07 A
SDS28030	Produce Street Lighting Design (& Liaise With OLE)	78d	09-Mar-07 A	09-Jul-07 A
SDS28040	Produce Traffic Signal Only Ducting	7d	08-May-07 A	16-May-07 A
SDS28050	Produce Soft Landscaping Design	57d	02-Apr-07 A	29-Jun-07 A
SDS28060	Produce Traffic Signals Layout	19d	01-Mar-07 A	28-Mar-07 A
SDS28070	Produce Traffic Signs Design (Signs, Markings, Signals)	12d	01-Mar-07 A	19-Mar-07 A
SDS28080	Produce Earthworks Design	160d	08-May-07 A	11-Jan-08 A
SDS28300	Revise Alignment to Inc. Final Track Horizontal Alignment (Horizontal Design Freeze) & Issue to Substn Designers	9d	15-Feb-07 A	28-Feb-07 A
SDS28310	Produce Kerbs, Footway & Paved Area Design	9d	01-Mar-07 A	14-Mar-07 A
SDS28320	Produce Pavement Design	56d	08-May-07 A	31-Jul-07 A
SDS56450	Issue Notification Of Completion Letter- Hard & Soft Landscaping Design to tie Section 3C	0d		21-Sep-07 A
SDS56810	Issue Notification Of Completion Letter- Street Lighting Design (Inc. Any OLE Combined Pole Design) to tie Section 3C	0d		16-Aug-07 A
SDS59360	Compile Planning Drawings	4d	21-Aug-07 A	24-Aug-07 A
SDS59770	Advise Track, Stops, Modellers Changes To Accom RSA1 & PD Comments	7d	03-Jan-07 A	11-Jan-07 A
SDS59780	Pass Guidance/Envelope To Track & Others As Necessary	0d		11-Jan-07 A
SDS60940	Revise Horizontal to Inc. Track Horizontal Alignment, RSA1 & PD Comments	5d	30-Jan-07 A	05-Feb-07 A
SDS60950	Revise Alignment to Inc. Minor Changes From Traffic Modelling	3d	15-Jan-07 A	17-Jan-07 A
SDS67300	Street Lighting Survey Work	8d	21-Nov-06 A	30-Nov-06 A
SDS69690	Produce Hard Landscaping Design	111d	02-Apr-07 A	19-Sep-07 A
SDS80040	Final RSA	9d	05-Feb-08	18-Feb-08
SDS80050	Incorporate Final RSA Comments	5d	19-Feb-08	25-Feb-08
Drainage		254d	12-Mar-07 A	10-Mar-08
SDS71670	Hydraulic Modelling & First Pass Drainage Design	116d	12-Mar-07 A	07-Sep-07 A
SDS71680	Receipt of Drainage Survey Information	0d		14-Jan-08*
SDS71690	Outfall Consent/Approval from SW	0d		25-Feb-08*
SDS71700	Outfall Consent/Approval from CEC	0d		14-Jan-08*
SDS71710	Outfall Consent/Approval from SEPA	0d		06-Aug-07 A
SDS71720	Compile Drainage Package	5d	03-Oct-07 A	10-Oct-07 A
SDS71730	Issue Drainage Design Completion Letter to tie for Approval Section 3C	0d		11-Oct-07 A
SDS73240	Final Detailed Drainage Design	23d	07-Sep-07 A	10-Oct-07 A
SDS80480	Final Detailed Drainage Design	42d	16-Nov-07 A	25-Jan-08
SDS80490	Compile Drainage Package	2d	25-Jan-08	28-Jan-08
SDS80500	Issue Drainage Design Completion Letter to tie for Approval Section 3C	0d		28-Jan-08
SDS80510	Confirm Drainage and Amend if Required	9d	26-Feb-08	10-Mar-08
Boundary & Accomodation Works (Task500.4.3)		115d	26-Mar-07 A	31-Aug-07 A
SDS42190	Detailed Design of Boundary & Accomodation Works	103d	26-Mar-07 A	31-Aug-07 A
SDS42200	Issue Notification Of Completion Letter- Detailed Design of Boundary & Accomodation Works Section 3C	0d		31-Aug-07 A
Utilities Plates 34 to 42		378d	06-Mar-06 A	27-Aug-07 A
A12020	Close Out PD Issues & Propose Diversions	41d	29-Aug-06 A	27-Oct-06 A
A12030	Issue PD to SUCs	0d		07-Nov-06 A
A12040	Consult SUCs and MUDFA (at later stage - when appointed)	64d	08-Nov-06 A	19-Feb-07 A
A12050	Access to MUDFA	0d		23-Oct-06 A
A12060	Issue For IDC	0d		19-Feb-07 A
A12070	IDC	3d	19-Feb-07 A	21-Feb-07 A
A12080	Issue to SUCs	0d		22-Feb-07 A
A12090	SUCs Approval	120d	22-Feb-07 A	27-Aug-07 A
UTIL100	Section 3C - Pre-Preliminary Design (Utilities)	76d	06-Mar-06 A	30-Jun-06 A
UTIL900	Issue to Statutory Utility Companies (SUCs)	0d		30-Jun-06 A
TRO's		551d	01-Apr-06 A	30-May-08
SDS33470	Collate Exisiting TROs	65d	01-Apr-06 A	12-Jul-06 A
SDS33480	Receive Preliminary Roads Design	0d		12-Jul-06 A
SDS82050	Interim TRO Design Section 3C	5d	28-Jan-08*	01-Feb-08
SDS82060	Final TRO Design Section 3C	5d	23-May-08	30-May-08
TTRO's		177d	29-Aug-06 A	11-May-07 A
TTRO320	SDS Produce Affected Roads Listing For MUDFA Works	64d	29-Aug-06 A	30-Nov-06 A
TTRO370	SDS Produce Affected Roads Listing For INFRACO Works	36d	12-Mar-07 A	04-May-07 A
TTRO710	Issue Affected Roads Listing For MUDFA Works To Dundas & Wilson	0d		30-Nov-06 A
TTRO720	Dundas & Wilson Draft TTRO Schedule For MUDFA Works	0d	01-Dec-06 A	01-Dec-06 A
TTRO820	Issue Affected Roads Listing For INFRACO Works To Dundas & Wilson	0d		04-May-07 A
TTRO830	Dundas & Wilson Draft TTRO Schedule For INFRACO Works	5d	04-May-07 A	11-May-07 A
CAP - GRW		986d	19-Sep-05 A	28-Jul-09
CON-0610	Requirements Definition (Contract Dates)	62d	19-Sep-05 A	19-Dec-05 A
Tram Stop Saltire Square (Task500.4.7)		801d	05-Jun-06 A	28-Jul-09
A26380	Prepare Tram Stop Planning Submission Drawings for Issue to Planning Drawings Team	33d	11-Jun-07 A	27-Jul-07 A
A26390	Produce Engineering Detailed Design Drawings	76d	16-Aug-07 A	07-Dec-07 A
A26420	Issue Notification Of Completion Letter- Saltire Square Tram Stop Design to tie	0d		10-Dec-07 A
A26440	Tram Stop Design Complete - Drawings Issued for Construction	0d		04-Mar-08 A
A27580	Site Visit with tie & CEC To Review Preliminary Design	1d	02-Jul-07 A	02-Jul-07 A
A28250	ReDraw Due To Track Changes	1d	13-Oct-06 A	13-Oct-06 A
A44890	Prepare Detailed Design Stop Drawings	25d	02-May-07 A	11-Jun-07 A
A47840	Produce As Built Drawings	200d	03-Oct-08	28-Jul-09
A47850	Receive Final As Built Data from the Contractor	0d		30-Jun-09
A47860	Receive First As Built Data from the Contractor	0d		01-Oct-08*
A47870	Issue Final As Built Drawings	0d		28-Jul-09
A4920	General Arrangement Drawings	0d	05-Jun-06 A	05-Jun-06 A
A5430	Issue Tram Stop GA Drawings for Waterfront	0d		23-Jun-06 A
Tram Granton View Substation (Task500.4.10)		379d	19-Jun-06 A	10-Dec-07 A
A549540	Detailed Design Civils	160d	10-Apr-07 A	07-Dec-07 A

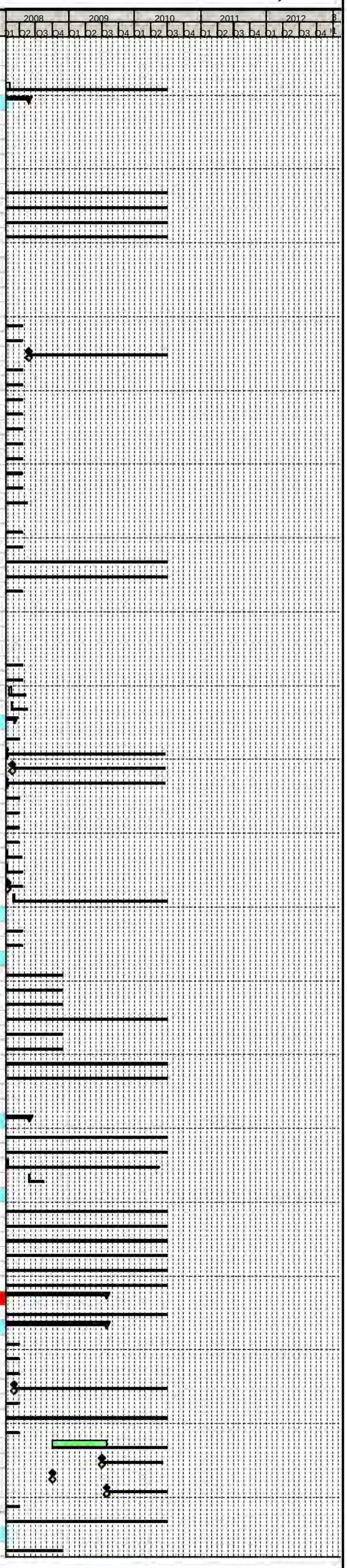

Primary Baseline
Actual Work
Remaining Work
Critical Remaining Work
Baseline Milestone
Milestone

Trams for Edinburgh ...connecting our Capital

Edinburgh Tram Project

SDS FULL DESIGN PROGRAMME @ V26

tie

Activity ID	Activity Name	Original Duration	Start	Finish
A549550	Detailed Architecture Design	169d	20-Nov-06 A	10-Aug-07 A
A549560	IDC on Detailed Design (Inc. Systems Assurance)	9d	13-Aug-07 A	24-Aug-07 A
A549570	Issue Notification Of Completion Letter- Tram Granton View Substation Planning Submission to tie for Approval	0d		10-Dec-07 A
A549670	Compile Substation Planning Submission	70d	24-Aug-07 A	07-Dec-07 A
A550070	Substation Consultation Period	28d	19-Jun-06 A	27-Jul-06 A
A550190	Issue of Grant Mains East Substation Design	0d		30-Jun-06 A
GRW - GRS		986d	19-Sep-05 A	28-Jul-09
CON-0640	Requirements Definition (Contract Dates)	62d	19-Sep-05 A	19-Dec-05 A
Tram Stop Granton (Task500.4.9)		796d	12-Jun-06 A	28-Jul-09
A26460	Prepare Tram Stop Planning Submission Drawings for Issue to Planning Drawings Team	9d	07-Aug-07 A	20-Aug-07 A
A26470	Produce Engineering Detailed Design Drawings	73d	21-Aug-07 A	07-Dec-07 A
A26500	Issue Notification Of Completion Letter- Granton Tram Stop Design to tie	0d		10-Dec-07 A
A26520	Tram Stop Design Complete - Drawings Issued for Construction	0d		23-Apr-08
A27590	Site Visit with tie & CEC To Review Preliminary Design	1d	02-Jul-07 A	02-Jul-07 A
A44900	Prepare Detailed Design Stop Drawings	5d	01-Aug-07 A	07-Aug-07 A
A47880	Produce As Built Drawings	200d	03-Oct-08	28-Jul-09
A47890	Receive Final As Built Data from the Contractor	0d		30-Jun-09
A47900	Receive First As Built Data from the Contractor	0d		01-Oct-08*
A47910	Issue Final As Built Drawings	0d		28-Jul-09
A4930	General Arrangement Drawings	0d	12-Jun-06 A	12-Jun-06 A
A5440	Issue Tram Stop GA Drawings for Granton Square	0d		30-Jun-06 A
Granton Square to Newhaven Road - Section 4		986d	19-Sep-05 A	28-Jul-09
Section Wide - Section 4		5d	12-Jun-06 A	16-Jun-06 A
Section Wide		5d	12-Jun-06 A	16-Jun-06 A
Preliminary Design Approvals		5d	12-Jun-06 A	16-Jun-06 A
SDS23390	Substation IDC	5d	12-Jun-06 A	16-Jun-06 A
SDS34740	PD - Submit Section 4 Substation Deliverables	0d		16-Jun-06 A
GRS - LGR - Section 4A		986d	19-Sep-05 A	28-Jul-09
Sub Section Wide		85d	06-Mar-06 A	30-Jun-06 A
Track		10d	02-Jun-06 A	15-Jun-06 A
A3260	First Pass Mx Horizontal and Vertical Alignment	8d	02-Jun-06 A	14-Jun-06 A
A3270	Handover Alignment Design P Way to Roads	0d		15-Jun-06 A
A3280	Coordination Meeting/Workshop Between PWay/Roads & Resolution of Major Conflicts	1d	15-Jun-06 A	15-Jun-06 A
Utilities		85d	06-Mar-06 A	30-Jun-06 A
UTIL110	Section 4A - Pre-Preliminary Design (Utilities)	76d	06-Mar-06 A	30-Jun-06 A
GRS - LGR		986d	19-Sep-05 A	28-Jul-09
CON-0670	Requirements Definition (Contract Dates)	62d	19-Sep-05 A	19-Dec-05 A
Tram Stop Lower Granton Road		795d	13-Jun-06 A	28-Jul-09
A47920	Produce As Built Drawings	200d	03-Oct-08	28-Jul-09
A47930	Receive Final As Built Data from the Contractor	0d		30-Jun-09
A47940	Receive First As Built Data from the Contractor	0d		01-Oct-08*
A47950	Issue Final As Built Drawings	0d		28-Jul-09
A4940	General Arrangement Drawings	8d	13-Jun-06 A	23-Jun-06 A
Sub Station Granton Road		45d	17-Apr-06 A	16-Jun-06 A
A549010	Preliminary Design of Substation	45d	17-Apr-06 A	16-Jun-06 A
A550200	Issue of Granton Road Substation Design	0d		16-Jun-06 A
LGR - NER - Section 4B		195d	19-Sep-05 A	16-Jun-06 A
Sub Section Wide		11d	02-Jun-06 A	16-Jun-06 A
Track		11d	02-Jun-06 A	16-Jun-06 A
A3390	First Pass Mx Horizontal and Vertical Alignment	9d	02-Jun-06 A	15-Jun-06 A
A3400	Handover Alignment Design P Way to Roads	0d		16-Jun-06 A
A3410	Coordination Meeting/Workshop Between PWay/Roads & Resolution of Major Conflicts	1d	16-Jun-06 A	16-Jun-06 A
LGR - NER		66d	19-Sep-05 A	19-Dec-05 A
CON-0700	Requirements Definition (Contract Dates)	62d	19-Sep-05 A	19-Dec-05 A
Roseburn Junction to Gogarburn - Section 5 (Task700)		986d	19-Sep-05 A	28-Jul-09
Section Wide - Section 5		552d	05-May-06 A	04-Jul-08
Section Wide		552d	05-May-06 A	04-Jul-08
Preliminary Design Approvals		101d	05-May-06 A	22-Sep-06 A
SDS23420	Track IDC	38d	03-Jul-06 A	25-Aug-06 A
SDS23440	Tramstops IDC	38d	03-Jul-06 A	25-Aug-06 A
SDS23450	Roads IDC	38d	03-Jul-06 A	25-Aug-06 A
SDS23460	Structures IDC	51d	03-Jul-06 A	15-Sep-06 A
SDS23470	Substation IDC	4d	13-Jun-06 A	16-Jun-06 A
SDS23940	Informal Consultation with tie	38d	05-May-06 A	30-Jun-06 A
SDS23950	tie approval	55d	03-Jul-06 A	22-Sep-06 A
SDS34760	PD - Submit Section 5 Substation Deliverables	0d		16-Jun-06 A
SDS34770	PD - Submit Section 5 Track Deliverables	0d		30-Jun-06 A
SDS34780	PD - Submit Section 5 Tramstops Deliverables	0d		30-Jun-06 A
SDS34790	PD - Submit Section 5 Roads Deliverables	0d		30-Jun-06 A
SDS34800	PD - Submit Section 5 Structures Deliverables	0d		30-Jun-06 A
SDS34810	PD - Section 5 Complete - Issue to tie	0d		30-Jun-06 A
Stakeholder Reviews		363d	17-Jul-06 A	14-Dec-07 A
A569700	Review Potential Issues with tie & Determine Consultation Strategy	9d	17-Jul-06 A	28-Jul-06 A
A569810	Review Potential Issues with tie & Determine Consultation Strategy	38d	15-Oct-07 A	10-Dec-07 A
A569820	Feedback to Design Teams for Study	23d	12-Nov-07 A	14-Dec-07 A
SDS23490	Stakeholder Review (Inc. Wider Community Meeting)	323d	31-Jul-06 A	10-Dec-07 A
OLE (Task700.1)		293d	29-Aug-06 A	22-Oct-07 A
A487228	(NOT REQUIRED) Re-issue Notification Of Completion Letter- Final Detailed Layout Plans & Standard & Special Cross	0d		22-Oct-07 A
SDS31320	Produce Final Detailed Layout Plans	139d	29-Aug-06 A	30-Mar-07 A
SDS55910	Issue Notification Of Completion Letter- Final Detailed Layout Plans & Standard & Special Cross Section to tie Sec 5B	0d		13-Apr-07 A
SDS59440	Finalise Combined Pole Design (With Street Lighting Traffic Signals)	5d	28-Mar-07 A	04-Apr-07 A
SDS59480	IDC OLE Design	8d	30-Mar-07 A	13-Apr-07 A
SDS69460	SDM Design Interface Review Meetings	1d	01-Dec-06 A	02-Dec-06 A
VO246 Edinburgh Park Viaduct OLE Pole Loading Calculations (Internal)		15d	10-Sep-07 A	28-Sep-07 A
SDS75200	VO246 Produce Pole Loading for SDS (Civils)	14d	10-Sep-07 A	28-Sep-07 A
Section Wide Design Assurance Review		10d	23-Jun-08	04-Jul-08
SDS72290	Produce Section Wide Design Assurance Statement	9d	23-Jun-08	04-Jul-08
ROJ - BAR - Section 5A (Task700.2)		986d	19-Sep-05 A	28-Jul-09
Sub Section Wide		676d	20-Feb-06 A	10-Oct-08
Sub Section Wide IDC		22d	10-Mar-08	08-Apr-08
A40511	Subsection Wide IDC	21d	10-Mar-08	08-Apr-08
Design Assurance Review		10d	09-Jun-08	20-Jun-08
SDS67990	Produce Design Assurance Statement	9d	09-Jun-08	20-Jun-08
Consents & Approvals		479d	22-Nov-06 A	10-Oct-08
Prior Approvals		408d	22-Nov-06 A	03-Jul-08
Combined Section Prior Approval		60d	28-Mar-08	20-Jun-08
A25730	Issue Combined Package 5A for Prior Approval to CEC	0d		28-Mar-08
A25740	Receive Combined Package 5A Comments From CEC	0d		23-May-08
A25780	Prior Approval Granted for Section 5A Combined Package	0d		20-Jun-08
A40480	CEC Approval Period - 5A Combined Package	38d	28-Mar-08	23-May-08
A40490	Update 5A Combined Package to CEC Comments	19d	23-May-08	20-Jun-08
Batch 5/05		52d	01-Feb-08	15-Apr-08
SDS75300	Batch 5/05 Formal Approval Period	38d	15-Feb-08	14-Apr-08

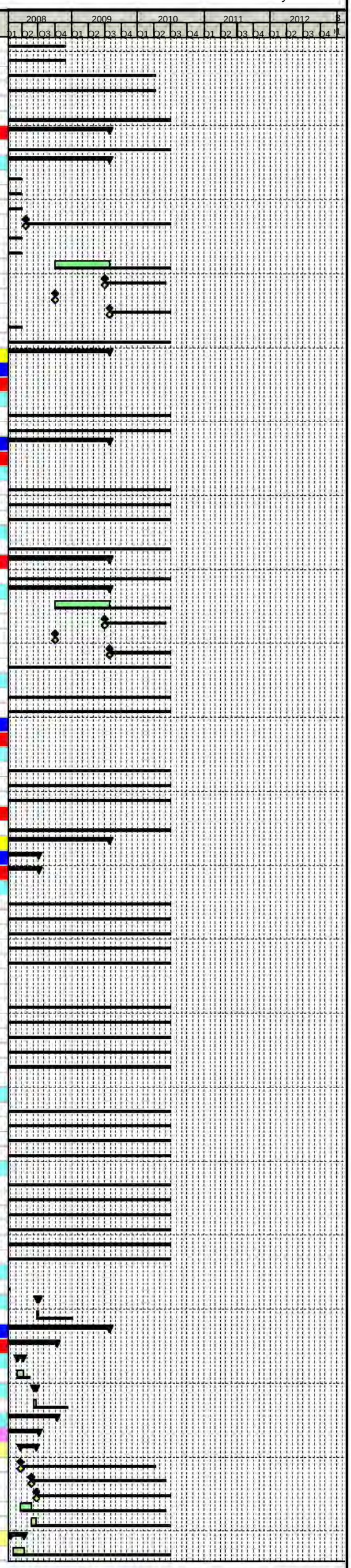

Primary Baseline
Actual Work
Remaining Work
Critical Remaining Work
Baseline Milestone
Milestone

Trams for Edinburgh
...connecting our Capital

Edinburgh Tram Project

SDS FULL DESIGN PROGRAMME @ V26

tie

Activity ID	Activity Name	Original Duration	Start	Finish
SDS75310	Issue Batch 5/05 For Approval to CEC	0d	15-Feb-08	
SDS75320	Receive CEC Prior Approval For Batch 5/05	0d	15-Apr-08	
SDS75350	Batch 5/05 Russell Road Retaining Walls - Collation of Planning Drawings	9d	01-Feb-08*	14-Feb-08
Batch 5/06		200d	16-Jul-07 A	30-Apr-08
SDS75360	Batch 5/06 Formal Approval Period	38d	03-Mar-08	29-Apr-08
SDS75370	Issue Batch 5/06 For Approval to CEC	0d	03-Mar-08	
SDS75380	Receive CEC Prior Approval For Batch 5/06	0d	30-Apr-08	
SDS75410	Batch 5/06 Murrayfield Stadium Tramstop - Collation of Planning Drawings	148d	16-Jul-07 A	29-Feb-08
Batch 5/07		54d	12-Mar-08	27-May-08
SDS75420	Batch 5/07 Formal Approval Period	38d	28-Mar-08	23-May-08
SDS75430	Issue Batch 5/07 For Approval to CEC ON HOLD AWAITING TIE DECISION	0d	28-Mar-08	
SDS75440	Receive CEC Prior Approval For Batch 5/07	0d	27-May-08	
SDS75470	Batch 5/07 Roseburn Street and Murrayfield Stadium - Collation of Planning Drawings	9d	12-Mar-08*	27-Mar-08
Batch 5/08		53d	25-Feb-08	08-May-08
SDS75480	Batch 5/08 Formal Approval Period	38d	10-Mar-08	07-May-08
SDS75490	Issue Batch 5/08 For Approval to CEC	0d	10-Mar-08	
SDS75500	Receive CEC Prior Approval For Batch 5/08	0d	08-May-08	
SDS75530	Batch 5/08 Murrayfield pitches and Water of Leith + Underpass- Collation of Planning Drawings	9d	25-Feb-08	07-Mar-08
Batch 5/10		52d	11-Feb-08	23-Apr-08
SDS75600	Batch 5/10 Formal Approval Period	38d	25-Feb-08	22-Apr-08
SDS75610	Issue Batch 5/10 For Approval to CEC	0d	25-Feb-08	
SDS75620	Receive CEC Prior Approval For Batch 5/10	0d	23-Apr-08	
SDS75650	Batch 5/10 Baird Drive and Balgreen Road - Collation of Planning Drawings	9d	11-Feb-08*	22-Feb-08
Roads, Track, OLE, Landscaping, Street Lighting		42d	21-Feb-07 A	19-Apr-07 A
SDS29600	Informal Consultation With CEC & tie Over Prior Approval for Roads, Track, OLE, Landscaping and Street Lighting	38d	21-Feb-07 A	19-Apr-07 A
Russell Road Retaining Wall One		73d	27-Sep-07 A	16-Jan-08
357	Commence Russell Road RW One Informal Consultation With CEC & tie Over Prior Approval	69d	27-Sep-07 A	16-Jan-08
Russell Road Retaining Wall Two		73d	27-Sep-07 A	16-Jan-08
417	Commence Russell Road RW Two Informal Consultation With CEC & tie Over Prior Approval	69d	27-Sep-07 A	16-Jan-08
Murrayfield Stop Retaining Walls		41d	30-Jul-07 A	24-Sep-07 A
SDS64000	Commence Murrayfield Stop RW Informal Consultation With CEC & tie Over Prior Approval	38d	30-Jul-07 A	24-Sep-07 A
Tram Stop Murrayfield Stadium		40d	22-Nov-06 A	25-Jan-07 A
A40740	Informal Consultation With CEC & tie over Prior Approval Tram Stop Murrayfield Stadium	38d	22-Nov-06 A	25-Jan-07 A
Roseburn Street Viaduct Superstructure		40d	14-Jan-08	07-Mar-08
SDS64210	Commence Roseburn Street Viaduct Informal Consultation With CEC & tie Over Prior Approval	38d	14-Jan-08	07-Mar-08
Murrayfield Stadium Retaining Wall		92d	28-Aug-07 A	14-Jan-08
SDS64320	Commence Murrayfield Stadium RW Informal Consultation With CEC & tie Over Prior Approval	87d	28-Aug-07 A	14-Jan-08
Murrayfield Underpass Superstructure		40d	14-Jan-08	07-Mar-08
SDS64870	Commence Murrayfield Underpass Informal Consultation With CEC & tie Over Prior Approval	38d	14-Jan-08	07-Mar-08
Murrayfield Training Pitches Retaining Wall		42d	08-Feb-08	07-Apr-08
SDS64380	Commence Murrayfield Training Pitches Informal Consultation With CEC & tie Over Prior Approval	38d	08-Feb-08	07-Apr-08
Water of Leith Bridge Superstructure		70d	15-Oct-07 A	29-Jan-08
SDS65080	Commence Water of Leith Structure Informal Consultation With CEC & tie Over Prior Approval	67d	15-Oct-07 A	29-Jan-08
Baird Drive Retaining Wall		42d	15-Feb-08	14-Apr-08
SDS64440	Commence Baird Drive RW Informal Consultation With CEC & tie Over Prior Approval	38d	15-Feb-08	14-Apr-08
Balgreen Road Bridge Superstructure		41d	08-May-08	03-Jul-08
SDS65330	Commence Balgreen Road Bridge Informal Consultation With CEC & tie Over Prior Approval	38d	08-May-08	03-Jul-08
Balgreen Road Retaining Wall		42d	10-Apr-08	06-Jun-08
SDS64500	Commence Balgreen Road RW Informal Consultation With CEC & tie Over Prior Approval	38d	10-Apr-08	06-Jun-08
VO71 Accomodation Works at Murrayfield (Not tie Approved)		40d	02-Jul-07 A	24-Aug-07 A
Planning Permission Boundary & Accomodation Works Murrayfield Stadium		40d	02-Jul-07 A	24-Aug-07 A
SDS61290	Informal Consultation With CEC & tie Over Planning Permission Murrayfield Stadium Boundary & Accomodation Works	38d	02-Jul-07 A	24-Aug-07 A
Technnical Approvals		421d	21-Feb-07 A	10-Oct-08
Russell Road Retaining Wall One Review Period (TAA)		92d	11-Sep-07 A	25-Jan-08
176	Issue Russell Road RW One Design Package to TAA	0d	06-Nov-07 A	
177	TAA Russell Road RW One Design Package Review Period	28d	06-Nov-07 A	17-Dec-07 A
178	Receive Russell Road RW One Design Package comments from TAA	0d	14-Jan-08	
179	Incorporate TAA comments into Russell Road RW One Design Package	9d	14-Jan-08	25-Jan-08
187	Commence Russell Road RW One Informal Consultation With CEC Over Technical Approval	38d	11-Sep-07 A	05-Nov-07 A
Russell Road Retaining Wall One Review Period (ScotRail)		30d	09-Jan-08 A	19-Feb-08
181	Issue Design and Check Certificate to Network Rail For Comment	0d	09-Jan-08 A	
182	Network Rail Comment Period	19d	09-Jan-08 A	05-Feb-08
183	Receive Network Rail Comments	0d	06-Feb-08	
184	Incorporate First Scot Rail comments into Structure Design Package	9d	06-Feb-08	19-Feb-08
Murrayfield Stop Retaining Walls Structure Review (TAA)		178d	13-Aug-07 A	28-Apr-08
SDS51460	Issue Murrayfield Stop RW Detailed Design Package to TAA	0d		18-Feb-08
SDS51530	Incorporate Murrayfield Stop RW TAA Comments	9d	15-Apr-08	28-Apr-08
SDS51570	Murrayfield Stop RW TAA Review Period	38d	18-Feb-08	15-Apr-08
SDS51600	Receive Murrayfield Stop RW TAA Comments	0d		15-Apr-08
SDS62920	Commence Murrayfield Stop RW Informal Consultation With CEC Over Technical Approval	38d	13-Aug-07 A	09-Oct-07 A
Russell Road Retaining Wall Two Review Period (TAA)		92d	11-Sep-07 A	25-Jan-08
206	Issue Russell Road RW Two Design Package to TAA	0d	22-Nov-07 A	
207	TAA Russell Road RW Two Design Package Review Period	28d	22-Nov-07 A	10-Jan-08 A
208	Receive Russell Road RW Two Design Package comments from TAA	0d	14-Jan-08	
209	Incorporate TAA comments into Russell Road RW Two Design Package	9d	14-Jan-08	25-Jan-08
217	Commence Russell Road RW Two Informal Consultation With CEC Over Technical Approval	49d	11-Sep-07 A	21-Nov-07 A
Russell Road Retaining Wall Two Review Period (ScotRail)		30d	28-Jan-08	07-Mar-08
211	Issue Design and Check Certificate to Network Rail For Comment	0d	28-Jan-08	
212	Network Rail Comment Period	19d	28-Jan-08	22-Feb-08
213	Receive Network Rail Comments	0d	25-Feb-08	
214	Incorporate First Scot Rail comments into Structure Design Package	9d	25-Feb-08	07-Mar-08
Roseburn Street Viaduct Review (TAA)		99d	26-Nov-07 A	21-Apr-08
SDS63080	Roseburn Street Viaduct TAA Review Period	38d	11-Feb-08	08-Apr-08
SDS63090	Issue Roseburn Street Viaduct Detailed Design Package to TAA	0d		11-Feb-08*
SDS63100	Incorporate Roseburn Street Viaduct TAA Comments	9d	08-Apr-08	21-Apr-08
SDS63110	Receive Roseburn Street Viaduct TAA Comments	0d		08-Apr-08
SDS63120	Commence Roseburn Street Viaduct Informal Consultation With CEC Over Technical Approval	47d	26-Nov-07 A	11-Feb-08
Murrayfield Stadium Retaining Wall Structure Review (TAA)		217d	06-Jul-07 A	14-May-08
SDS58030	Issue Murrayfield Stadium Retaining Wall Detailed Design Package to TAA	0d		29-Feb-08
SDS58060	TAA Murrayfield Stadium Retaining Wall Review Period	38d	03-Mar-08	29-Apr-08
SDS58100	Receive Murrayfield Stadium Retaining Wall TAA Comments	0d		29-Apr-08
SDS58130	Incorporate Murrayfield Stadium Retaining Wall TAA Comments	9d	30-Apr-08	14-May-08
SDS62930	Commence Murrayfield Stadium RW Informal Consultation With CEC Over Technical Approval	154d	06-Jul-07 A	29-Feb-08
Murrayfield Stadium Retaining Wall Structure Review (Network Rail)		42d	29-Feb-08	29-Apr-08
SDS63220	Issue Murrayfield Stadium RW Design and Check Certificate to Network Rail For Comment	0d		29-Feb-08
SDS63230	Murrayfield Stadium RW Network Rail Comment Period	19d	03-Mar-08	01-Apr-08
SDS63240	Receive Murrayfield Stadium RW Network Rail Comments	0d		01-Apr-08
SDS63250	Incorporate Murrayfield Stadium RW Network Rail Comments	19d	02-Apr-08	29-Apr-08
Murrayfield Underpass Superstructure Review (TAA)		181d	27-Jul-07 A	15-Apr-08
SDS58560	Issue Murrayfield Underpass Detailed Design Package to TAA	0d		29-Feb-08*
SDS58590	TAA Murrayfield Underpass Review Period	19d	03-Mar-08	01-Apr-08
SDS58630	Receive Murrayfield Underpass TAA Comments	0d		01-Apr-08
SDS58660	Incorporate Murrayfield Underpass TAA Comments	9d	02-Apr-08	15-Apr-08

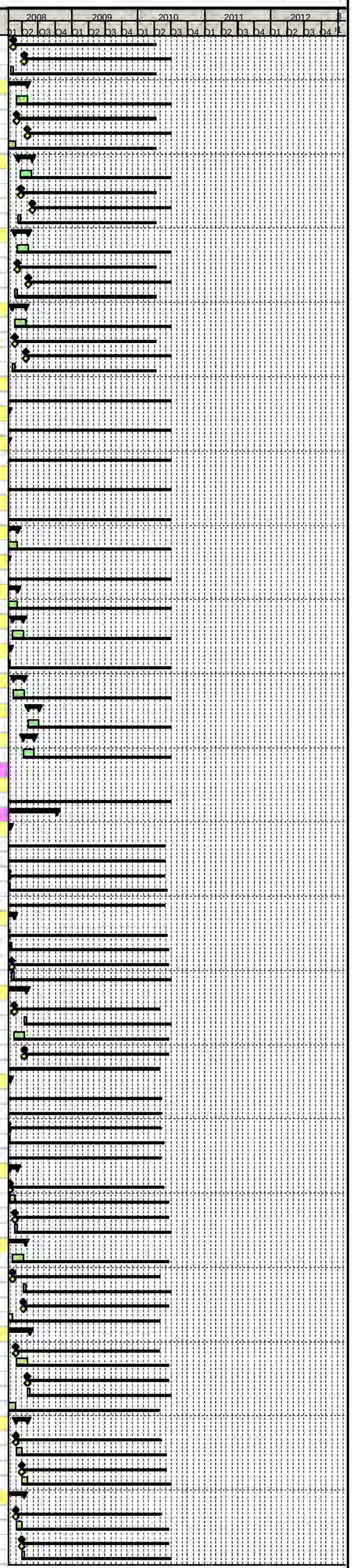

Primary Baseline
Actual Work
Remaining Work
Critical Remaining Work
Baseline Milestone
Milestone

Trams for Edinburgh
...connecting our Capital

Edinburgh Tram Project

SDS FULL DESIGN PROGRAMME @ V26

tie

Activity ID	Activity Name	Original Duration	Start	Finish
SDS62940	Commence Murrayfield Underpass Informal Consultation With CEC Over Technical Approval	38d	27-Jul-07 A	24-Sep-07 A
Murrayfield Underpass Superstructure Review (Network Rail)		42d	29-Feb-08	29-Apr-08
SDS63280	Issue Murrayfield Underpass Design and Check Certificate to Network Rail For Comment	0d		29-Feb-08
SDS63290	Murrayfield Underpass Network Rail Comment Period	19d	03-Mar-08	01-Apr-08
SDS63300	Receive Murrayfield Underpass Network Rail Comments	0d		01-Apr-08
SDS63310	Incorporate Murrayfield Underpass Network Rail Comments	19d	02-Apr-08	29-Apr-08
Murrayfield Training Pitches Retaining Wall Structure Review (TAA)		73d	08-Feb-08	20-May-08
SDS58280	Issue Murrayfield Training Pitches Detailed Design Package to TAA	0d		07-Apr-08
SDS58310	Murrayfield Training Pitches TAA Review Period	19d	08-Apr-08	06-May-08
SDS58350	Receive Murrayfield Training Pitches TAA Comments	0d		06-May-08
SDS58380	Incorporate Murrayfield Training Pitches TAA Comments	9d	07-May-08	20-May-08
SDS62950	Commence Murrayfield Training Pitches Informal Consultation With CEC Over Technical Approval	38d	08-Feb-08	07-Apr-08
Murrayfield Training Pitches Retaining Wall Structure Review (Network Rail)		41d	20-May-08	16-Jul-08
SDS63340	Issue Murrayfield Training Pitches Design and Check Certificate to Network Rail For Comment	0d		20-May-08
SDS63350	Murrayfield Training Pitches Network Rail Comment Period	19d	21-May-08	18-Jun-08
SDS63360	Receive Murrayfield Training Pitches Network Rail Comments	0d		18-Jun-08
SDS63370	Incorporate Murrayfield Training Pitches Network Rail Comments	19d	19-Jun-08	16-Jul-08
Water of Leith Bridge Review (TAA)		95d	22-Oct-07 A	11-Mar-08
SDS63150	Issue Water of Leith Bridge Detailed Design Package to TAA	0d		29-Jan-08
SDS63160	Water of Leith Bridge TAA Review Period	19d	30-Jan-08	26-Feb-08
SDS63170	Receive Water of Leith Bridge TAA Comments	0d		26-Feb-08
SDS63180	Incorporate Water of Leith Bridge TAA Comments	9d	27-Feb-08	11-Mar-08
SDS63190	Commence Water of Leith Informal Consultation With CEC Over Technical Approval	62d	22-Oct-07 A	29-Jan-08
Balgreen Road Bridge Review (TAA)		71d	08-May-08	14-Aug-08
SDS35810	Issue Balgreen Road Bridge Detailed Design Package to TAA	0d		03-Jul-08
SDS35840	Balgreen Road Bridge TAA Review Period	19d	04-Jul-08	31-Jul-08
SDS35880	Receive Balgreen Road Bridge TAA Comments	0d		31-Jul-08
SDS35910	Incorporate Balgreen Road Bridge TAA Comments	9d	01-Aug-08	14-Aug-08
SDS62910	Commence Balgreen Road Bridge Informal Consultation With CEC Over Technical Approval	38d	08-May-08	03-Jul-08
Balgreen Road Bridge Review (Network Rail)		41d	14-Aug-08	10-Oct-08
SDS63400	Issue Balgreen Road Bridge Design and Check Certificate to Network Rail For Comment	0d		14-Aug-08
SDS63410	Balgreen Road Bridge Network Rail Comment Period	19d	15-Aug-08	12-Sep-08
SDS63420	Receive Balgreen Road Bridge Network Rail Comments	0d		12-Sep-08
SDS63430	Incorporate Balgreen Road Bridge Network Rail Comments	19d	15-Sep-08	10-Oct-08
Baird Drive Retaining Wall Structure Review (TAA)		74d	15-Feb-08	28-May-08
SDS35500	Issue Baird Drive RW Detailed Design Package to TAA	0d		14-Apr-08
SDS35530	Baird Drive RW TAA Review Period	19d	15-Apr-08	13-May-08
SDS35570	Receive Baird Drive RW TAA Comments	0d		13-May-08
SDS35600	Incorporate Baird Drive RW TAA Comments	9d	14-May-08	28-May-08
SDS62960	Commence Baird Drive RW Informal Consultation With CEC Over Technical Approval	38d	15-Feb-08	14-Apr-08
Baird Drive Retaining Wall Structure Review (Network Rail)		40d	28-May-08	23-Jul-08
SDS63460	Issue Baird Drive RW Design and Check Certificate to Network Rail For Comment	0d		28-May-08
SDS63470	Baird Drive RW Network Rail Comment Period	19d	29-May-08	25-Jun-08
SDS63480	Receive Baird Drive RW Network Rail Comments	0d		25-Jun-08
SDS63490	Incorporate Baird Drive RW Network Rail Comments	19d	26-Jun-08	23-Jul-08
Balgreen Road Retaining Wall Structure Review (TAA)		72d	10-Apr-08	18-Jul-08
SDS51210	Issue Balgreen Road RW Detailed Design Package to TAA	0d		06-Jun-08
SDS51240	Balgreen Road RW TAA Review Period	19d	09-Jun-08	04-Jul-08
SDS51280	Receive Balgreen Road RW TAA Comments	0d		04-Jul-08
SDS51310	Incorporate Balgreen Road RW TAA Comments	9d	07-Jul-08	18-Jul-08
SDS62970	Commence Balgreen Road RW Informal Consultation With CEC Over Technical Approval	38d	10-Apr-08	06-Jun-08
Balgreen Road Retaining Wall Structure Review (Network Rail)		41d	18-Jul-08	15-Sep-08
SDS63520	Issue Balgreen Road RW Design and Check Certificate to Network Rail For Comment	0d		18-Jul-08
SDS63530	Balgreen Road RW Network Rail Comment Period	19d	21-Jul-08	15-Aug-08
SDS63540	Receive Balgreen Road RW Network Rail Comments	0d		15-Aug-08
SDS63550	Incorporate Balgreen Road RW Network Rail Comments	19d	18-Aug-08	15-Sep-08
Roads Technical Approval		350d	21-Feb-07 A	03-Jul-08
SDS29610	Issue Roads Design to Roads Authority for Approval	0d		08-Apr-08
SDS29620	Roads Authority Approval Period	38d	09-Apr-08	05-Jun-08
SDS29630	Receive Roads Authority Comments	0d		05-Jun-08
SDS29640	Update to Roads Authority Comments	19d	06-Jun-08	03-Jul-08
SDS29650	Roads Authority Informal Consultation	38d	21-Feb-07 A	19-Apr-07 A
SDS29720	Roads Technical Approval Granted	0d		03-Jul-08
Drainage Technical Approval		110d	11-Jan-08 A	12-Jun-08
SDS72780	Roads Authority Informal Consultation For Drainage	57d	11-Jan-08 A	08-Apr-08
SDS72790	Issue Drainage Design to Roads Authority for Approval	0d		08-Apr-08
SDS72800	Roads Authority Approval Period For Drainage	38d	09-Apr-08	05-Jun-08
SDS72810	Receive Roads Authority Comments For Drainage	0d		05-Jun-08
SDS72820	Update to Roads Authority Comments For Drainage	5d	06-Jun-08	12-Jun-08
SDS72830	Drainage Technical Approval Granted	0d		12-Jun-08
Track (Task700.2.1)		515d	21-Mar-06 A	28-Mar-08
A3520	First Pass Mx Horizontal and Vertical Alignment	15d	21-Mar-06 A	11-Apr-06 A
A3530	Handover Alignment Design P Way to Roads	0d		12-Apr-06 A
A3540	Coordination Meeting/Workshop Between PWay/Roads & Resolution of Major Conflicts	1d	12-Apr-06 A	12-Apr-06 A
SDS29320	Revise Alignment to Match Roads First Pass Vertical	6d	03-Jan-07 A	10-Jan-07 A
SDS29370	Handover Alignment Design Track to Roads	0d		10-Jan-07 A
SDS29740	Revise Alignment to Inc. Preliminary Design Comments	85d	03-Jul-06 A	08-Nov-06 A
SDS29760	Handover Alignment Design Track to Roads	0d		08-Nov-06 A
SDS57090	Issue Track Alignment Design to tie Section 5A	0d		01-Feb-07 A
SDS57370	tie Approval Period	19d	01-Feb-07 A	28-Feb-07 A
SDS57400	Receive tie Comments	0d	03-Apr-07 A	
SDS57460	Incorporate tie Comments	37d	04-May-07 A	29-Jun-07 A
SDS59590	IDC Track Design	9d	19-Jan-07 A	01-Feb-07 A
SDS75150	Address tie Comments, NR Accom, Other Revisions, IDC & Section Submission Package	151d	06-Aug-07 A	28-Mar-08
Roads, Street Lighting & Landscaping (Task700.2.2)		605d	20-Feb-06 A	03-Jul-08
A3550	Route Appreciation/Junct Layout & Determine with tie & CEC Works Extent	52d	20-Feb-06 A	10-May-06 A
A3560	Frontage Surveys	30d	07-Mar-06 A	21-Apr-06 A
A3570	Set Up Mx Models	27d	10-Mar-06 A	21-Apr-06 A
A3580	Produce Preliminary Horizontal Road Alignment Design (Inc Lanes & Parking Zones)	6d	11-May-06 A	18-May-06 A
A3590	Preliminary Road Safety Audit	1d	19-Jun-06 A	19-Jun-06 A
A3600	Review & Amend TRO Drawings & Schedules for Modifications Required Post Prelim Design	1d	12-Jun-06 A	12-Jun-06 A
A3610	Handover Alignment Design Roads to Pway	0d		19-Jun-06 A
A3620	Coordination Meeting/Workshop Between Roads & Pway Teams	1d	19-May-06 A	19-May-06 A
A5550	Undertake Road Marking, Pedestrian Req & Traffic Signalling Design	3d	17-May-06 A	19-May-06 A
SDS29330	Produce First Pass Vertical Alignment	8d	15-Dec-06 A	03-Jan-07 A
SDS29350	Handover Alignment Design Roads to Pway	0d		03-Jan-07 A
SDS29380	Revise Vertical Alignment to Match Final Track Alignment	4d	10-Jan-07 A	15-Jan-07 A
SDS29390	Horizontal & Vertical Alignment Design Complete	0d		24-Feb-07 A
SDS29400	Issue Roads Design to tie for Approval Section 5A	0d		27-Mar-07 A
SDS29410	Cross Check all Horizontal Design Aspects With Vertical Alignment	9d	12-Feb-07 A	23-Feb-07 A
SDS29420	tie Approval Period	19d	27-Mar-07 A	25-Apr-07 A
SDS29450	Issue Construction Drawings	0d		03-Jul-08
SDS29460	Road Safety Audit Stage 2 (Intermediate)	5d	16-Mar-07 A	22-Mar-07 A

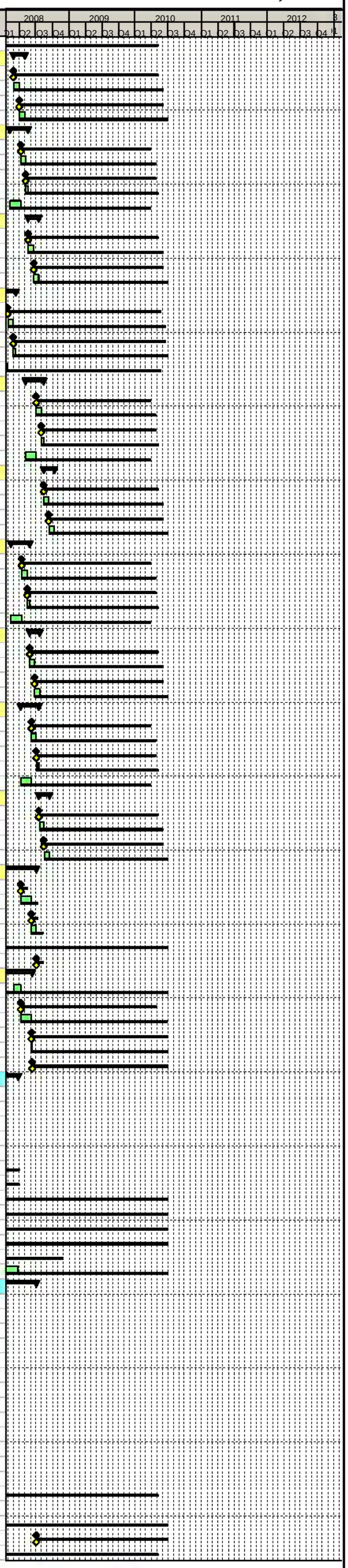

Primary Baseline
Actual Work
Remaining Work
Critical Remaining Work
Baseline Milestone
Milestone

Trams for Edinburgh ..connecting our Capital

Edinburgh Tram Project

SDS FULL DESIGN PROGRAMME @ V26

tie

Activity ID	Activity Name	Original Duration	Start	Finish
SDS29470	Insert Intermediate RSA Comments	3d	23-Mar-07 A	27-Mar-07 A
SDS29480	Produce Site Clearance Drawings & Schedule	4d	12-Mar-07 A	15-Mar-07 A
SDS29490	Produce Fencing, Barriers & Guardrails Design	9d	12-Feb-07 A	23-Feb-07 A
SDS29500	Produce Street Lighting Design (& Liaise With OLE)	1d	03-Jan-07 A	04-Jan-07 A
SDS29510	Produce Traffic Signal Only Ducting	7d	08-Dec-06 A	18-Dec-06 A
SDS29520	Produce Soft Landscaping Design	50d	17-Jan-07 A	30-Mar-07 A
SDS29530	Produce Traffic Signals Layout	9d	12-Feb-07 A	23-Feb-07 A
SDS29540	Produce Traffic Signs Design (Signs, Markings, Signals)	9d	12-Feb-07 A	23-Feb-07 A
SDS29550	Produce Earthworks Design	41d	13-Aug-07 A	12-Oct-07 A
SDS29770	Revise Alignment to Inc. Final Track Horizontal Alignment (Horizontal Design Freeze)	9d	01-Dec-06 A	14-Dec-06 A
SDS29780	Produce Kerbs, Footway & Paved Area Design	9d	12-Feb-07 A	23-Feb-07 A
SDS29790	Produce Pavement Design	56d	08-May-07 A	31-Jul-07 A
SDS29800	IDC (Inc. Systems Assurance)	9d	12-Feb-07 A	23-Feb-07 A
SDS56570	Issue Notification Of Completion Letter- Hard & Soft Landscaping Design to tie Section 5A	0d		15-Feb-08
SDS56840	Issue Street Lighting Design (Inc. Any OLE Combined Pole Design) to tie Section 5A	0d		06-Mar-07 A
SDS59370	Compile Planning Drawings	9d	13-Mar-07 A	26-Mar-07 A
SDS59790	Advise Track, Stops, Modellers Changes To Accom RSA1 & PD Comments	11d	19-Oct-06 A	03-Nov-06 A
SDS59800	Pass Guidance/Envelope To Track & Others As Necessary	0d		03-Nov-06 A
SDS60970	Revise Horizontal to Inc. Track Horizontal Alignment, RSA1 & PD Comments	8d	08-Nov-06 A	17-Nov-06 A
SDS67160	Street Lighting Survey Work	60d	03-Jul-06 A	29-Sep-06 A
SDS69700	Produce Hard Landscaping Design	202d	10-Apr-07 A	15-Feb-08
SDS80060	Final RSA	9d	17-Mar-08	01-Apr-08
SDS80070	Incorporate Final RSA Comments	5d	02-Apr-08	08-Apr-08
VO231 Balgreen Road Option 3		83d	05-Nov-07 A	10-Mar-08
SDS81210	Inputs received (track, tramstop, substation)	0d	14-Jan-08	
SDS81220	Additional Roads Design	20d	17-Jan-08 A	14-Feb-08
SDS81230	RSA2 (by auditors)	10d	15-Feb-08	29-Feb-08
SDS81240	Detailed Design Check	2d	15-Feb-08	18-Feb-08
SDS81250	Update from DD check comments, inc CAD	2d	19-Feb-08	20-Feb-08
SDS81260	Update from RSA comments, inc CAD	3d	03-Mar-08	05-Mar-08
SDS81270	Finalise Design and prepare for issue	2d	06-Mar-08	07-Mar-08
SDS81280	Issue Notification of Completion letter - revised Roads Detailed Design Section 5A (VO231)	0d	10-Mar-08	
SDS81330	Track Redesign	10d	05-Nov-07 A	19-Nov-07 A
SDS81340	OLE Design Rework due to Track changes	14d	03-Dec-07 A	21-Dec-07 A
VO286 Balgreen Road Option 3 additional OLE work		10d	10-Dec-07 A	21-Dec-07 A
SDS81760	OLE Design Rework due to Track changes	9d	10-Dec-07 A	21-Dec-07 A
Drainage		254d	12-Mar-07 A	10-Mar-08
SDS71770	Hydraulic Modelling & First Pass Drainage Design	111d	12-Mar-07 A	29-Aug-07 A
SDS71780	Receipt of Drainage Survey Information	0d		25-Feb-08*
SDS71790	Outfall Consent/Approval from SW	0d		25-Feb-08*
SDS71800	Outfall Consent/Approval from CEC	0d		31-Aug-07 A
SDS71810	Outfall Consent/Approval from SEPA	0d		10-May-07 A
SDS71820	Compile Drainage Package	14d	19-Sep-07 A	09-Oct-07 A
SDS71830	Issue Drainage Design Completion Letter to tie for Approval Section 5A	0d		10-Oct-07 A
SDS73250	Final Detailed Drainage Design	53d	29-Jun-07 A	18-Sep-07 A
SDS80520	Final Detailed Drainage Design	5d	29-Jan-08	04-Feb-08
SDS80530	Compile Drainage Package	5d	05-Feb-08	11-Feb-08
SDS80540	Issue Drainage Design Completion Letter to tie for Approval Section 5A	0d		13-Feb-08
SDS80550	Confirm Drainage and Amend if Required	9d	26-Feb-08	10-Mar-08
Boundary & Accomodation Works (Task700.2.3)		228d	02-Oct-06 A	24-Aug-07 A
SDS42370	Detailed Design of Boundary & Accomodation Works	95d	26-Mar-07 A	17-Aug-07 A
SDS42380	Issue Notification Of Completion Letter- Detailed Design of Boundary & Accomodation Works Section 5A	0d		24-Aug-07 A
VO71 Accomodation Works at Murrayfield (Not tie approved)		148d	02-Oct-06 A	04-May-07 A
SDS61130	Relocation of Turnstiles, Reconfigure Pavement/Parking, Clubhouse, Stairs & Storage	47d	02-Oct-06 A	08-Dec-06 A
SDS61140	Relocate & Reinstate Training Pitches Inc. Drainage, Floodlights, Sprinklers & Reinforcement	47d	02-Oct-06 A	08-Dec-06 A
SDS61150	Issue Murrayfield Stadium Boundary & Accomodation Works	0d		04-Dec-06 A
SDS61160	tie Approval Period	19d	11-Dec-06 A	15-Jan-07 A
SDS61170	No Comments Received & Now Changed Protocol	0d		04-May-07 A
SDS61200	Issue Murrayfield Training Pitches Boundary & Accomodation Works	0d		04-Dec-06 A
SDS61210	tie Approval Period	19d	11-Dec-06 A	15-Jan-07 A
SDS61220	No Comments Received & Now Changed Protocol	0d		04-May-07 A
VO163 SRU Cross Sections		22d	20-Dec-06 A	29-Jan-07 A
SDS73090	Additional Report Produced for tie & SRU	22d	20-Dec-06 A	29-Jan-07 A
SDS73100	Issue Additional Report to tie & SRU	0d		29-Jan-07 A
Utilities (Task700.2.4)		486d	13-Mar-06 A	08-Feb-08
A12290	Close Out PD Issues and Re-issue PD Drawings to SUCs	51d	14-Aug-06 A	27-Oct-06 A
A12300	Design Development	331d	29-Aug-06 A	28-Jan-08
A12310	Initial Consultations With SUCs and IDTs	38d	29-Aug-06 A	23-Oct-06 A
A12320	Access to MUDFA and Others	119d	03-Oct-06 A	05-Apr-07 A
A12330	MUDFA Appointment	0d		03-Oct-06 A
A12340	IDC	10d	22-Mar-07 A	05-Apr-07 A
A12350	Issue DD to SUC For Approval	0d		05-Apr-07 A
A12360	SUC Approval Period	91d	06-Apr-07 A	27-Aug-07 A
A14080	Consult With SUCs on DD	119d	03-Oct-06 A	05-Apr-07 A
UTIL1200	Issue to Statutory Utility Companies (SUCs)	0d		30-Jun-06 A
UTIL130	Section 5A - Pre-Preliminary Design (Utilities)	71d	13-Mar-06 A	30-Jun-06 A
VO45 TGP Design Co-odination		397d	14-Jul-06 A	08-Feb-08
A14540	Additional Coordination with TGP and ScotRail over HG Cable	368d	14-Jul-06 A	08-Feb-08
OLE		2d	19-Jun-06 A	20-Jun-06 A
A4170	Preliminary Review of OLE Pole Positioning for Utility Survey Scope Definition	2d	19-Jun-06 A	20-Jun-06 A
TRO's		580d	01-Apr-06 A	10-Jul-08
SDS33650	Collate Exisiting TROs	65d	01-Apr-06 A	12-Jul-06 A
SDS33660	Receive Preliminary Roads Design	0d		12-Jul-06 A
SDS82070	Interim TRO Design Section 5A	5d	28-Jan-08*	01-Feb-08
SDS82080	Final TRO Design Section 5A	5d	04-Jul-08	10-Jul-08
ROJ - MUR		986d	19-Sep-05 A	28-Jul-09
CON-0730	Requirements Definition (Contract Dates)	62d	19-Sep-05 A	19-Dec-05 A
Tram Stop Murrayfield Stadium (Task700.2.6)		827d	28-Apr-06 A	28-Jul-09
A26620	Prepare Murrayfield Tram Stop Planning Submission Drawings	6d	13-Nov-06 A	20-Nov-06 A
A26630	Produce Engineering Detailed Design Drawings	172d	02-Mar-07 A	20-Nov-07 A
A26660	Issue Notification Of Completion Letter- Murrayfield Stadium Tram Stop Design to tie	0d		20-Nov-07 A
A26680	Tram Stop Design Complete - Drawings Issued for Construction	0d		30-Apr-08
A27610	Site Visit with tie & CEC To Review Preliminary Design	1d	02-Aug-06 A	02-Aug-06 A
A44000	Issue Murrayfield Stadium Tram Stop Package for Prior Approval to tie	0d		21-Nov-06 A
A44010	Update Planning Submission for Issue to Planning Drawings Team	109d	29-Jan-07 A	13-Jul-07 A
A44020	IDC Tram Stop Design for Planning Submission (Inc. Systems Asssurance)	10d	06-Nov-06 A	20-Nov-06 A
A44030	tie Approval Period	19d	22-Nov-06 A	19-Dec-06 A
A44040	Receive tie Comments	0d		15-Jan-07 A
A44050	Compile Planning Drawings Tram Stop Murrayfield Stadium	10d	16-Jul-07 A	30-Jul-07 A
A44910	Prepare Detailed Design Stop Drawings	132d	02-Aug-06 A	23-Feb-07 A
A48380	Receive First As Built Data from the Contractor	0d		01-Oct-08*
A48390	Produce As Built Drawings	200d	03-Oct-08	28-Jul-09
A48400	Receive Final As Built Data from the Contractor	0d		30-Jun-09

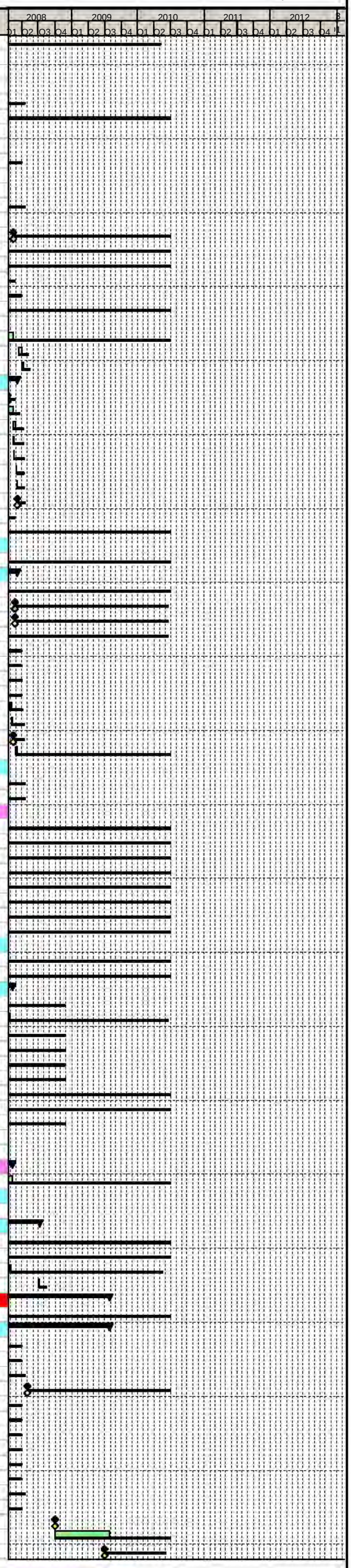

Primary Baseline
Actual Work
Remaining Work
Critical Remaining Work
Baseline Milestone
Milestone

Trams for Edinburgh
...connecting our Capital

Edinburgh Tram Project

SDS FULL DESIGN PROGRAMME @ V26

tie

Activity ID	Activity Name	Original Duration	Start	Finish
A48410	Issue Final As Built Drawings	0d		28-Jul-09
A4950	General Arrangement Drawings	41d	28-Apr-06 A	30-Jun-06 A
A5720	Issue Tram Stop GA Drawings for Murrayfield	0d		30-Jun-06 A
Structures		601d	20-Dec-05 A	28-Apr-08
S14 Existing Russell Road Railway Bridge		96d	20-Dec-05 A	03-May-06 A
Surveys		96d	20-Dec-05 A	03-May-06 A
Topographical		96d	20-Dec-05 A	03-May-06 A
A484230	Desk Top Studies	82d	20-Dec-05 A	02-May-06 A
A484240	Draft & approve Method Statements	0d	03-May-06 A	
Geotechnical		96d	20-Dec-05 A	03-May-06 A
A484260	Desk Top Studies	82d	20-Dec-05 A	02-May-06 A
A484270	Draft & approve Method Statements	0d	03-May-06 A	
W01 Russell Road Retaining Wall One		552d	13-Feb-06 A	15-Apr-08
SDS43440	Review of Previous Work	9d	13-Feb-06 A	24-Feb-06 A
SDS43450	Optioneering	14d	27-Feb-06 A	17-Mar-06 A
SDS43460	Initial Design	9d	20-Mar-06 A	31-Mar-06 A
SDS43470	Production of AIP Drawing	16d	04-May-06 A	26-May-06 A
SDS43480	Issue AIP Drawing to tie	0d		26-May-06 A
SDS43490	Checking	12d	11-May-06 A	30-May-06 A
SDS43500	tie AIP Drawing Review Period	5d	30-May-06 A	05-Jun-06 A
SDS43510	Undertake Consultations	34d	11-May-06 A	30-Jun-06 A
SDS43520	Receive AIP Drawing Comments from tie	0d		05-Jun-06 A
SDS43530	Incorporate tie Comments into AIP Drawing	4d	06-Jun-06 A	09-Jun-06 A
SDS43540	Production of AIP Document	4d	12-Jun-06 A	15-Jun-06 A
SDS43550	Issue Russell Road Retaining Wall One AIP Document to tie	0d		30-Jun-06 A
SDS43560	tie AIP Document Review Period	1d	14-Aug-06 A	14-Aug-06 A
SDS43570	Receive AIP Document Comments from tie	0d		14-Aug-06 A
SDS43580	Incorporate tie Comments into AIP Document	5d	15-Aug-06 A	21-Aug-06 A
SDS43590	Issue AIP Document & Drawing to TAA	0d		21-Aug-06 A
SDS43600	TAA AIP Document & Drawing Review Period	4d	22-Aug-06 A	28-Aug-06 A
SDS43610	Issue AIP Document & Drawing to Planning Department	0d		11-Jul-06 A
SDS43620	Planning Department AIP Document & Drawing Review Period	32d	11-Jul-06 A	28-Aug-06 A
SDS43630	Recieve AIP Document & Drawing Comments from TAA	0d		20-Nov-06 A
SDS43640	Incorporate TAA Comments into AIP Document & Drawing	5d	20-Nov-06 A	27-Nov-06 A
SDS43650	Recieve AIP Document & Drawing Comments from Planning Department	0d		20-Nov-06 A
SDS43660	Incorporate Planning Department TAA Comments into AIP Document & Drawing	5d	20-Nov-06 A	27-Nov-06 A
SDS43670	Issue AIP Drawing & Document to Structures Detailed Design Team	0d		30-Nov-06 A
Preliminary Design Milestones		228d	14-Aug-06 A	09-Jul-07 A
159	Receipt of tie PD Acceptance	0d	20-Nov-06 A	
160	Receipt of Alignment Prelim Design Package	0d	22-Dec-06 A	
161	Receipt of OLE Prelim Design Package	0d	10-Apr-07 A	
162	Receipt of Ground Investigation Data & Interpretative Geotechnical Report	0d	09-Jul-07 A	
163	Receipt of an Approved and Signed AIP document	0d	14-Aug-06 A	
Structure Detailed Design		78d	23-Jul-07 A	07-Nov-07 A
165	Structure Detailed Design	18d	23-Jul-07 A	16-Aug-07 A
166	Structure Detailed Design Draughting	23d	06-Aug-07 A	10-Sep-07 A
167	Issue Structure Detailed Design Package to CAT I Checker	0d	11-Sep-07 A	
168	Structure CAT I Check	19d	11-Sep-07 A	08-Oct-07 A
169	Receive & Incorporate CAT I comments	9d	09-Oct-07 A	22-Oct-07 A
170	Issue Notification Of Completion Letter- Russell Road Retaining Wall One Structure Design Package to tie	0d		07-Nov-07 A
Issue Russell Road RW One Structure Design Package For Construction/Fabrication		0d	15-Apr-08	15-Apr-08
185	Issue Russell Road RW One Structure Design Package For Construction/Fabrication	0d	15-Apr-08	
W02 Russell Road Retaining Wall Two		552d	13-Feb-06 A	15-Apr-08
SDS43680	Review of Previous Work	9d	13-Feb-06 A	24-Feb-06 A
SDS43690	Optioneering	14d	27-Feb-06 A	17-Mar-06 A
SDS43700	Initial Design	9d	20-Mar-06 A	31-Mar-06 A
SDS43710	Production of AIP Drawing	16d	04-May-06 A	26-May-06 A
SDS43720	Issue Russell Rd RW2 AIP Drawing to tie	0d		26-May-06 A
SDS43730	Checking	12d	11-May-06 A	30-May-06 A
SDS43740	tie AIP Drawing Review Period	5d	30-May-06 A	05-Jun-06 A
SDS43750	Undertake Consultations	34d	11-May-06 A	30-Jun-06 A
SDS43760	Receive AIP Drawing Comments from tie	0d		05-Jun-06 A
SDS43770	Incorporate tie Comments into AIP Drawing	4d	06-Jun-06 A	09-Jun-06 A
SDS43780	Production of AIP Document	4d	12-Jun-06 A	15-Jun-06 A
SDS43790	Issue Russell Road Retaining Wall Two AIP Document to tie	0d		30-Jun-06 A
SDS43800	tie AIP Document Review Period	40d	15-Jun-06 A	14-Aug-06 A
SDS43810	Receive AIP Document Comments from tie	0d		14-Aug-06 A
SDS43820	Incorporate tie Comments into AIP Document	6d	14-Aug-06 A	21-Aug-06 A
SDS43830	Issue AIP Document & Drawing to TAA	0d		21-Aug-06 A
SDS43840	TAA AIP Document & Drawing Review Period	5d	21-Aug-06 A	28-Aug-06 A
SDS43850	Issue AIP Document & Drawing to Planning Department	0d		11-Jul-06 A
SDS43860	Planning Department AIP Document & Drawing Review Period	32d	11-Jul-06 A	28-Aug-06 A
SDS43870	Recieve AIP Document & Drawing Comments from TAA	0d		25-Oct-06 A
SDS43880	Incorporate TAA Comments into AIP Document & Drawing	9d	23-Oct-06 A	03-Nov-06 A
SDS43890	Recieve AIP Document & Drawing Comments from Planning Department	0d		24-Oct-06 A
SDS43900	Incorporate Planning Department TAA Comments into AIP Document & Drawing	5d	24-Oct-06 A	31-Oct-06 A
SDS43910	Issue AIP Drawing & Document to Structures Detailed Design Team	0d		31-Oct-06 A
Preliminary Design Milestones		228d	14-Aug-06 A	09-Jul-07 A
189	Receipt of tie PD Acceptance	0d	20-Nov-06 A	
190	Receipt of Alignment Prelim Design Package	0d	15-Jan-07 A	
191	Receipt of OLE Prelim Design Package	0d	20-Nov-06 A	
192	Receipt of Ground Investigation Data & Interpretative Geotechnical Report	0d	09-Jul-07 A	
193	Receipt of an Approved and Signed AIP document	0d	14-Aug-06 A	
Structure Detailed Design		69d	17-Aug-07 A	21-Nov-07 A
195	Structure Detailed Design	14d	17-Aug-07 A	07-Sep-07 A
196	Structure Detailed Design Draughting	24d	17-Aug-07 A	24-Sep-07 A
197	Issue Structure Detailed Design Package to CAT I Checker	0d	25-Sep-07 A	
198	Structure CAT I Check	9d	25-Sep-07 A	08-Oct-07 A
199	Receive & Incorporate CAT I comments	9d	09-Oct-07 A	22-Oct-07 A
200	Issue Notification Of Completion Letter- Russell Road Retaining Wall Two Structure Design Package to tie	0d		21-Nov-07 A
SDS63910	Completion of Planning Drawings	11d	06-Nov-07 A	21-Nov-07 A
Issue Russell Road RW Two Structure Design Package For Construction/Fabrication		0d	15-Apr-08	15-Apr-08
SDS62400	Issue Russell Road RW Two Structure Design Package For Construction/Fabrication	0d		15-Apr-08
W18 Murrayfield Stop Retaining Walls (Task700.2.17)		433d	11-Aug-06 A	28-Apr-08
Murrayfield Stop Retaining Walls Structure Detailed Design		313d	17-Nov-06 A	18-Feb-08
SDS51410	Retaining Wall Detailed Design	188d	17-Nov-06 A	10-Sep-07 A
SDS51420	Retaining Wall Detailed Design Draughting	263d	08-Dec-06 A	28-Jan-08
SDS51450	Issue Notification Of Completion Letter- Murrayfield Stop Retaining Walls Package to tie for Comments	0d		29-Jan-08
SDS51470	Issue Detailed Design Package to CAT II or CAT III Checker (as appropriate)	0d	05-Jan-07 A	
SDS51510	Receive and Incorporate CATII or CATIII Check Comments	9d	05-Feb-08	18-Feb-08
SDS63950	Prepare Planning Drawings	9d	11-Sep-07 A	24-Sep-07 A
SDS64150	CAT II Review Period	9d	22-Jan-08	04-Feb-08
Murrayfield Stop Retaining Walls Preliminary Design Milestones		145d	11-Aug-06 A	12-Mar-07 A

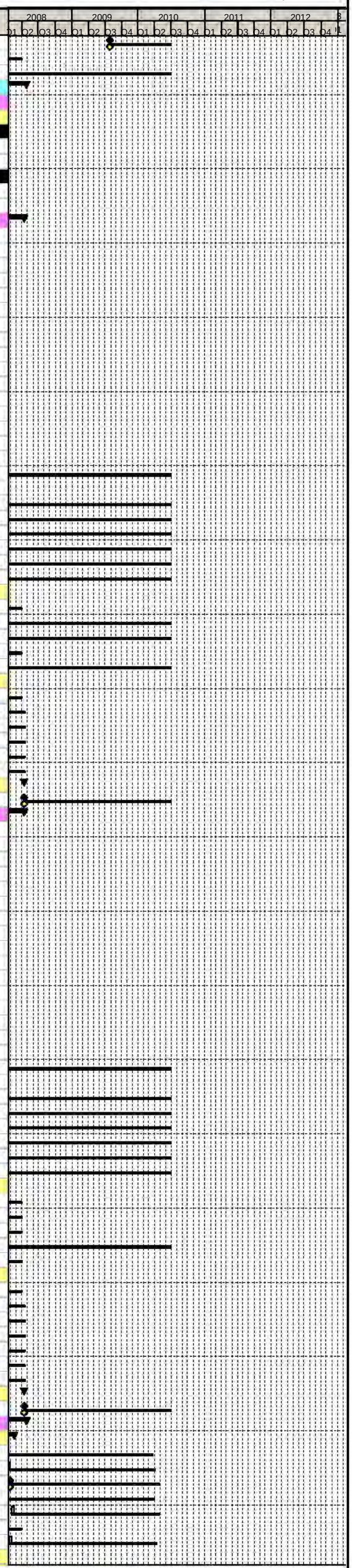

Primary Baseline
Actual Work
Remaining Work
Critical Remaining Work
Baseline Milestone
Milestone

Trams for Edinburgh
...connecting our Capital

Edinburgh Tram Project

SDS FULL DESIGN PROGRAMME @ V26

tie

Activity ID	Activity Name	Original Duration	Start	Finish
SDS51400	Retaining Wall Analysis	74d	30-Oct-06 A	23-Feb-07 A
SDS62380	PD of Murrayfield Stop Retaining Walls Structure	89d	11-Aug-06 A	22-Dec-06 A
SDS66660	tie and TAA Sign Off PD	0d		12-Mar-07 A
Issue Murrayfield Stop Retaining Walls Design Package For Construction / Fabrication		0d	28-Apr-08	28-Apr-08
SDS51560	Issue Murrayfield Stop Retaining Walls Specification clauses For Construction	0d		28-Apr-08
MUR - BAR Including Elevated Route		786d	19-Sep-05 A	10-Oct-08
CON-0760	Requirements Definition (Contract Dates)	62d	19-Sep-05 A	19-Dec-05 A
Structures		648d	30-Mar-06 A	10-Oct-08
S21 Murrayfield Structure		202d	30-Mar-06 A	16-Jan-07 A
SDS20610	Collate Base Data on Alignment & Topo survey	16d	30-Mar-06 A	25-Apr-06 A
SDS20620	Define Clearances	10d	13-Apr-06 A	02-May-06 A
SDS20630	Develop Preliminary Structures Options	23d	21-Apr-06 A	26-May-06 A
SDS20650	Options Review	5d	30-May-06 A	05-Jun-06 A
SDS20660	Produce Draft GA (AIP) Drg Showing Preferred Option	16d	30-May-06 A	21-Jun-06 A
SDS20670	Issue Murrayfield Structure Draft GA (AIP) Drg to tie	0d		23-Jun-06 A
SDS20680	Select Preferred Design Option in Liaison with tie	5d	09-Jun-06 A	15-Jun-06 A
SDS20690	Update Base Data on Alignment & Topo Survey	2d	09-Jun-06 A	12-Jun-06 A
SDS20700	Draft AIP Document Text	8d	13-Jun-06 A	22-Jun-06 A
SDS20710	Update AIP GA Drgs	8d	15-Jun-06 A	26-Jun-06 A
SDS20720	Check of AIP Document	2d	23-Jun-06 A	26-Jun-06 A
SDS20730	Issue AIP Document to Technical Approval Authority (TAA) Form A	0d		23-Jun-06 A
SDS20740	TAA Review AIP & Comment	78d	27-Jun-06 A	20-Oct-06 A
SDS20750	Receive AIP Comments from TAA	0d		20-Oct-06 A
SDS20760	Incorporate AIP Comments from TAA	28d	20-Oct-06 A	30-Nov-06 A
SDS20770	Re-issue AIP to TAA	0d		09-Jan-07 A
SDS20780	TAA Review AIP	5d	10-Jan-07 A	16-Jan-07 A
SDS20790	TAA Sign Off AIP Document	0d		16-Jan-07 A
SDS20800	Issue AIP Document to Planning Department	0d		20-Nov-06 A
SDS20810	Planning Department Review AIP & Comment	6d	20-Nov-06 A	27-Nov-06 A
SDS20830	Receive AIP Comments from Planning Department	0d		18-Dec-06 A
SDS20840	Incorporate AIP Comments from Planning Department	9d	19-Dec-06 A	09-Jan-07 A
SDS20850	Issue AIP to Structures Detailed Design Team	0d		16-Jan-07 A
S21A Roseburn Street Viaduct (Task700.2.9)		462d	31-Jul-06 A	27-May-08
Roseburn Street Viaduct Preliminary Design Milestones		10d	31-Jul-06 A	11-Aug-06 A
SDS58730	Update Available Base Data/Info Re Alignment/Topo Survey etc	9d	31-Jul-06 A	11-Aug-06 A
Roseburn Street Viaduct Superstructure Detailed Design		308d	07-Aug-06 A	19-Oct-07 A
SDS58750	Superstructure Analysis	148d	07-Aug-06 A	23-Mar-07 A
SDS58770	Superstructure Detailed Design	205d	19-Sep-06 A	03-Aug-07 A
SDS58790	Superstructure Detailed Design Draughting	201d	03-Oct-06 A	10-Aug-07 A
SDS58830	Issue Notification Of Completion Letter- Roseburn Street Viaduct Superstructure Detailed Design Package to tie	0d		19-Oct-07 A
SDS58850	Issue Detailed Design Package to CAT III Checker	0d		20-Jul-07 A
SDS58860	Bridge CAT III Review Period	52d	20-Jul-07 A	05-Oct-07 A
SDS58870	CAT II Check	4d	02-Apr-07 A	05-Apr-07 A
SDS58910	Update to CAT II Comments	8d	05-Apr-07 A	20-Apr-07 A
SDS58920	Issue CAT II Checked Roseburn Street Viaduct Superstructure to tie For Procurement Purposes	0d		13-Apr-07 A
SDS58940	Receive and Incorporate CATIII Check Comments	20d	17-Sep-07 A	15-Oct-07 A
Roseburn Street Viaduct Substructure Detailed Design		298d	21-Aug-06 A	19-Oct-07 A
SDS58760	Substructure Analysis	143d	21-Aug-06 A	30-Mar-07 A
SDS58780	Substructure Detailed Design	205d	19-Sep-06 A	03-Aug-07 A
SDS58800	Substructure Detailed Design Draughting	104d	02-Apr-07 A	10-Sep-07 A
SDS64100	Issue Notification Of Completion Letter- Roseburn Street Substructure Viaduct Detailed Design Package to tie for co	0d		19-Oct-07 A
SDS64110	Issue Detailed Design Package to CAT III Checker	0d		02-Apr-07 A
SDS64120	Bridge CAT III Review Period	4d	02-Apr-07 A	05-Apr-07 A
SDS64130	Receive and Incorporate CATIII Check Comments	26d	11-Sep-07 A	18-Oct-07 A
Roseburn Street Viaduct Design Package For Construction / Fabrication		0d	27-May-08	27-May-08
SDS59000	Issue Roseburn Street Viaduct Specification clauses For Construction	0d		27-May-08
S21B Murrayfield Stadium Retaining Wall (Task700.2.13)		403d	20-Oct-06 A	27-May-08
Murrayfield Stadium Retaining Wall Structure Detailed Design		286d	17-Jan-07 A	29-Feb-08
SDS57980	Retaining Wall Detailed Design	135d	17-Jan-07 A	10-Aug-07 A
SDS57990	Retaining Wall Detailed Design Draughting	205d	31-Jan-07 A	10-Dec-07 A
SDS58020	Issue Notification Of Completion Letter- Murrayfield Stadium RW Package to tie for Comments	0d		11-Dec-07 A
SDS58040	Issue Detailed Design Package to CAT II Checker	0d		07-Dec-07 A
SDS58050	Bridge CATII or CAT III Review Period	10d	07-Dec-07 A	21-Dec-07 A
SDS58110	Receive and Incorporate CATII Check Comments	42d	21-Dec-07 A	29-Feb-08
Murrayfield Stadium Retaining Wall Preliminary Design Milestones		99d	20-Oct-06 A	16-Mar-07 A
SDS57950	Update Available Base Data/Info Re Alignment/Topo Survey etc	60d	20-Oct-06 A	25-Jan-07 A
SDS57970	Retaining Wall Analysis	56d	15-Dec-06 A	16-Mar-07 A
Issue Murrayfield Stadium Retaining Wall Design Package For Construction / Fabrication		0d	27-May-08	27-May-08
SDS58190	Issue Murrayfield Stadium Retaining Wall Specification clauses For Construction	0d		27-May-08
S21C Murrayfield Underpass (Task700.2.14)		449d	31-Jul-06 A	08-May-08
Murrayfield Underpass Preliminary Design Milestones		10d	31-Jul-06 A	11-Aug-06 A
SDS58450	Update Available Base Data/Info Re Alignment/Topo Survey etc	9d	31-Jul-06 A	11-Aug-06 A
Murrayfield Underpass Superstructure Detailed Design		291d	07-Aug-06 A	26-Sep-07 A
SDS58470	Superstructure Analysis	148d	07-Aug-06 A	23-Mar-07 A
SDS58490	Superstructure Detailed Design	156d	05-Sep-06 A	07-May-07 A
SDS58520	Superstructure Detailed Design Draughting	173d	11-Dec-06 A	10-Sep-07 A
SDS58550	Issue Notification Of Completion Letter- Murrayfield Underpass Superstructure Package to tie	0d		26-Sep-07 A
SDS58570	Issue Detailed Design Package to CAT II	0d	08-Jan-07 A	
SDS58580	Bridge CATII Review Period	165d	08-Jan-07 A	17-Sep-07 A
SDS58640	Receive and Incorporate CATII Check Comments	13d	04-Sep-07 A	21-Sep-07 A
Murrayfield Underpass Design Package For Construction / Fabrication		0d	08-May-08	08-May-08
SDS58720	Issue Murrayfield Underpass Specification Clauses For Construction	0d		08-May-08
S21D Murrayfield Training Pitches Retaining Wall (Task700.2.15)		440d	20-Oct-06 A	16-Jul-08
Murrayfield Training Pitches Retaining Wall Preliminary Design Milestones		148d	20-Oct-06 A	24-May-07 A
SDS58200	Update Available Base Data/Info Re Alignment/Topo Survey etc	125d	20-Oct-06 A	07-May-07 A
SDS58220	Retaining Wall Analysis	94d	02-Jan-07 A	24-May-07 A
Murrayfield Training Pitches Retaining Wall Structure Detailed Design		299d	05-Feb-07 A	07-Apr-08
SDS58230	Retaining Wall Detailed Design	237d	05-Feb-07 A	07-Feb-08
SDS58240	Retaining Wall Detailed Design Draughting	208d	20-Mar-07 A	07-Feb-08
SDS58260	Check of Drawings (IDC)	9d	25-Mar-08	07-Apr-08
SDS58270	Issue Notification Of Completion Letter- Murrayfield Training Pitches RW Package to tie	0d		07-Apr-08
SDS58290	Issue Detailed Design Package to CAT II or CAT III Checker (as appropriate)	0d		07-Feb-08*
SDS58300	Bridge CATII or CAT III Review Period	19d	08-Feb-08	06-Mar-08
SDS58360	Receive and Incorporate CATII or CATIII Check Comments	9d	07-Mar-08	20-Mar-08
Murrayfield Training Pitches Retaining Wall Design Package For Construction / Fabrication		0d	16-Jul-08	16-Jul-08
SDS58440	Issue Murrayfield Training Pitches Retaining Wall Specification clauses For Construction	0d		16-Jul-08
S21E Water of Leith Bridge (Task700.2.16)		449d	31-Jul-06 A	08-May-08
Water of Leith Bridge Substructure Detailed Design		264d	20-Nov-06 A	03-Dec-07 A
SDS59040	Substructure Analysis	164d	20-Nov-06 A	03-Aug-07 A
SDS59060	Substructure Detailed Design	13d	08-Dec-06 A	04-Jan-07 A
SDS59080	Substructure Detailed Design Draughting	224d	18-Dec-06 A	30-Nov-07 A
SDS64970	Issue Notification Of Completion Letter- Water of Leith Bridge Detailed Design Package to tie	0d		03-Dec-07 A
SDS64980	Issue Detailed Design Package to CAT II Checker	0d		09-Jan-07 A

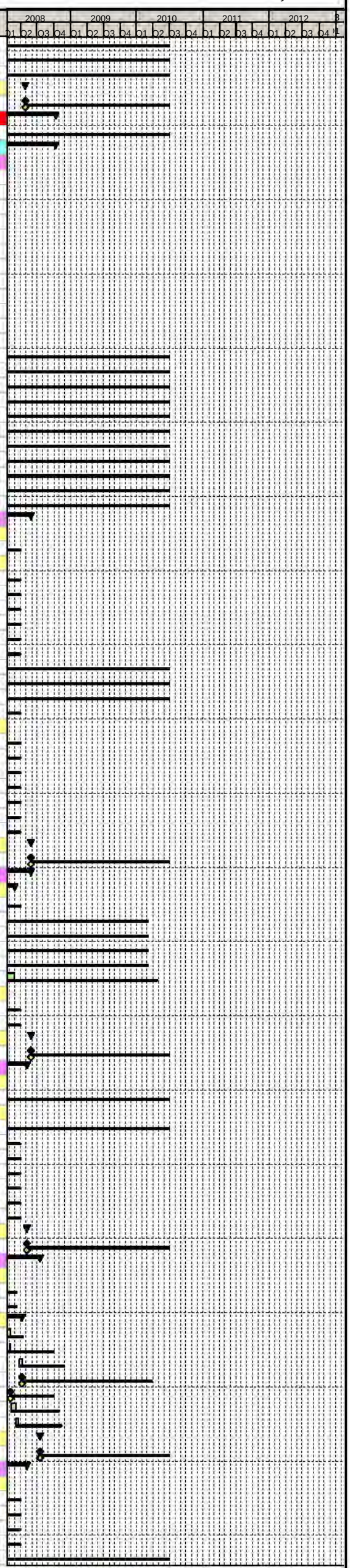

Primary Baseline
Actual Work
Remaining Work
Critical Remaining Work
Baseline Milestone
Milestone

Trams for Edinburgh
connecting our Capital

Edinburgh Tram Project

SDS FULL DESIGN PROGRAMME @ V26

tie

Activity ID	Activity Name	Original Duration	Start	Finish
Water of Leith Bridge Preliminary Design Milestones		120d	31-Jul-06 A	23-Jan-07 A
SDS59010	Update Available Base Data/Info Re Alignment/Topo Survey etc	113d	31-Jul-06 A	23-Jan-07 A
Water of Leith Bridge Superstructure Detailed Design		230d	13-Nov-06 A	09-Oct-07 A
SDS59030	Superstructure Analysis	45d	13-Nov-06 A	25-Jan-07 A
SDS59050	Superstructure Detailed Design	191d	20-Nov-06 A	14-Sep-07 A
SDS59070	Superstructure Detailed Design Draughting	187d	04-Dec-06 A	21-Sep-07 A
SDS59090	Check of Drawings (IDC)	9d	24-Sep-07 A	08-Oct-07 A
SDS59100	Prepare Relevant Bridgeworks Specification Clauses	14d	18-Dec-06 A	15-Jan-07 A
SDS59110	Issue Notification Of Completion Letter- Water of Leith Bridge Detailed Design Package to tie	0d		09-Oct-07 A
SDS59130	Issue Detailed Design Package to CAT II Checker	0d		18-Dec-06 A
SDS59140	Bridge CATII Review Period	186d	19-Dec-06 A	05-Oct-07 A
SDS59220	Receive and Incorporate CATII Check Comments	13d	13-Sep-07 A	03-Oct-07 A
Water of Leith Bridge Design Package For Construction / Fabrication		0d	08-May-08	08-May-08
SDS59280	Issue Water of Leith Bridge Specification clauses For Construction	0d		08-May-08
S22 Balgreen Road Bridge (Task700.2.10)		648d	30-Mar-06 A	10-Oct-08
SDS53030	Collate Base Data on Alignment & Topo survey	16d	30-Mar-06 A	25-Apr-06 A
SDS53040	Define Clearances	8d	13-Apr-06 A	27-Apr-06 A
SDS53050	Develop Preliminary Structures Options	41d	13-Apr-06 A	19-Jun-06 A
SDS53060	Options Review	2d	19-Jun-06 A	20-Jun-06 A
SDS53070	Produce Draft GA (AIP) Drg Showing Preferred Option	36d	02-May-06 A	23-Jun-06 A
SDS53080	Issue Balgreen Road Bridge Draft GA (AIP) Drg to tie	0d		30-Jun-06 A
SDS53090	Select Preferred Design Option in Liaison with tie	5d	19-May-06 A	25-May-06 A
SDS53100	Update Base Data on Alignment & Topo Survey	5d	19-May-06 A	25-May-06 A
SDS53110	Draft AIP Document Text	5d	19-May-06 A	25-May-06 A
SDS53120	Update AIP GA Drgs	5d	19-May-06 A	26-May-06 A
SDS53130	Check of AIP Document	5d	19-May-06 A	25-May-06 A
SDS53140	Issue AIP Document to Technical Approval Authority (TAA) Form A	0d		30-Jun-06 A
SDS53150	Issue AIP Document to Planning Department	0d		11-Jul-06 A
SDS53160	TAA Review AIP & Comment	16d	30-Jun-06 A	24-Jul-06 A
SDS53170	Planning Department Review AIP & Comment	8d	11-Jul-06 A	21-Jul-06 A
SDS53180	Receive AIP Comments from TAA	0d		24-Jul-06 A
SDS53190	Balgreen Bridge On Hold, Possible Revisit to Design	38d	29-Sep-06 A	24-Nov-06 A
SDS53200	Incorporate AIP Comments from TAA	46d	24-Jul-06 A	29-Sep-06 A
SDS53220	Re-issue AIP to TAA	0d		24-Nov-06 A
SDS53230	TAA Review AIP	5d	27-Nov-06 A	01-Dec-06 A
SDS53240	TAA Sign Off AIP Document	0d		01-Dec-06 A
SDS53250	Issue AIP to Structures Detailed Design Team	0d		01-Dec-06 A
Balgreen Road Bridge Superstructure Detailed Design		431d	20-Oct-06 A	03-Jul-08
SDS35710	Update Available Base Data/Info Re Alignment/Topo Survey etc	125d	20-Oct-06 A	07-May-07 A
SDS35720	Superstructure Analysis	282d	29-Nov-06 A	15-Feb-08
SDS35740	Superstructure Detailed Design	60d	14-Jan-08	14-Apr-08
SDS35760	Superstructure Detailed Design Draughting	66d	28-Jan-08	07-May-08
SDS35780	Check of Drawings (IDC)	9d	08-May-08	21-May-08
SDS35800	Issue Notification Of Completion Letter- Balgreen Road Bridge Superstructure Package to tie	0d		03-Jul-08
SDS35820	Issue Detailed Design Package to CAT II or CAT III Checker (as appropriate)	0d		07-May-08
SDS35830	Bridge CATII or CAT III Review Period	28d	08-May-08	19-Jun-08
SDS35890	Receive and Incorporate CATII or CATIII Check Comments	9d	20-Jun-08	03-Jul-08
VO231 Balgreen Road Bridge Preliminary Design Re-Visit		329d	20-Nov-06 A	13-Mar-08
SDS61380	Receive Network Rail Acceptance	0d		20-Nov-06 A
SDS70050	Develop Preliminary Structures Options	69d	29-May-07 A	10-Sep-07 A
SDS70060	Produce Draft GA (AIP) Drg Showing Preferred Option	32d	26-Jun-07 A	10-Aug-07 A
SDS70070	Draft AIP Document Text	54d	16-Jul-07 A	04-Oct-07 A
SDS70080	Check of AIP Document	87d	11-Sep-07 A	25-Jan-08
SDS70090	Options Review	0d	20-Jul-07 A	20-Jul-07 A
SDS70110	Issue AIP Document to Technical Approval Authority (TAA) Form A	0d		25-Jan-08
SDS70120	Incorporate AIP Comments from TAA	9d	22-Feb-08	06-Mar-08
SDS70130	Receive AIP Comments from TAA	0d		21-Feb-08
SDS70140	Re-issue AIP to TAA	0d		06-Mar-08
SDS70150	TAA Review AIP	5d	07-Mar-08	13-Mar-08
SDS70160	TAA Sign Off AIP Document	0d		13-Mar-08
SDS70170	TAA Review Period	18d	28-Jan-08	21-Feb-08
SDS70180	Receive Preferred Option from tie	0d		28-Aug-07 A
Balgreen Road Bridge Substructure Detailed Design		124d	14-Jan-08	03-Jul-08
SDS35730	Substructure Analysis	9d	14-Jan-08	25-Jan-08
SDS35750	Substructure Detailed Design	14d	28-Jan-08*	15-Feb-08
SDS35770	Substructure Detailed Design Draughting	23d	04-Feb-08*	07-Mar-08
SDS65180	Prepare Relevant Bridgeworks Specification Clauses	14d	10-Mar-08	01-Apr-08
SDS65190	Issue Notification Of Completion Letter- Balgreen Road Bridge Substructure Package to tie	0d		03-Jul-08
SDS65200	Issue Detailed Design Package to CAT II or CAT III Checker (as appropriate)	0d		07-Mar-08
SDS65210	Bridge CATII or CAT III Review Period	28d	10-Mar-08	22-Apr-08
SDS65230	Receive and Incorporate CATII or CATIII Check Comments	9d	23-Apr-08	07-May-08
Balgreen Road Bridge Design Package For Construction / Fabrication		0d	10-Oct-08	10-Oct-08
SDS35970	Issue Balgreen Road Bridge Specification Clauses For Construction	0d		10-Oct-08
W08 Baird Drive Retaining Wall (Task700.2.11)		591d	30-Mar-06 A	23-Jul-08
SDS53260	Collate Base Data on Alignment & Topo survey	15d	30-Mar-06 A	24-Apr-06 A
SDS53270	Define Clearances	8d	13-Apr-06 A	26-Apr-06 A
SDS53280	Develop Preliminary Structures Options	9d	13-Apr-06 A	28-Apr-06 A
SDS53290	Options Review	5d	02-May-06 A	08-May-06 A
SDS53300	Produce Draft GA (AIP) Drg Showing Preferred Option	9d	02-May-06 A	15-May-06 A
SDS53310	Issue Baird Drive RW Draft GA (AIP) Drg to tie	0d		22-May-06 A
SDS53320	Select Preferred Design Option in Liaison with tie	7d	16-May-06 A	24-May-06 A
SDS53330	Update Base Data on Alignment & Topo Survey	4d	16-May-06 A	19-May-06 A
SDS53340	Draft AIP Document Text	10d	16-May-06 A	31-May-06 A
SDS53350	Update AIP GA Drgs	9d	01-Jun-06 A	14-Jun-06 A
SDS53360	Check of AIP Document	3d	19-May-06 A	24-May-06 A
SDS53370	Issue AIP Document to Technical Approval Authority (TAA) Form A	0d		14-Jun-06 A
SDS53380	Issue AIP Document to Planning Department	0d		14-Jun-06 A
SDS53390	TAA Review AIP & Comment	48d	19-Jun-06 A	29-Aug-06 A
SDS53410	Receive AIP Comments from TAA	0d		01-Sep-06 A
SDS53430	Incorporate AIP Comments from TAA	9d	01-Sep-06 A	14-Sep-06 A
SDS53440	Incorporate AIP Comments from Planning Department	20d	16-Aug-06 A	14-Sep-06 A
SDS53450	Re-issue AIP to TAA	0d		28-Jan-08*
SDS53460	TAA Review AIP	14d	28-Jan-08	15-Feb-08
SDS53470	TAA Sign Off AIP Document	0d		15-Feb-08
SDS53480	Issue AIP to Structures Detailed Design Team	0d		15-Feb-08
SDS68310	Baird Drive On Hold, Possible Revisit to Design	153d	29-Sep-06 A	29-May-07 A
Baird Drive Retaining Wall Preliminary Design Milestones		31d	22-Nov-06 A	12-Jan-07 A
SDS35410	Retaining Wall Analysis	30d	22-Nov-06 A	12-Jan-07 A
Baird Drive Retaining Wall Structure Detailed Design		373d	20-Oct-06 A	14-Apr-08
SDS35400	Update Available Base Data/Info Re Alignment/Topo Survey etc	125d	20-Oct-06 A	07-May-07 A
SDS35430	Retaining Wall Detailed Design	47d	03-Dec-07 A	18-Feb-08
SDS35460	Retaining Wall Detailed Design Draughting	47d	03-Dec-07 A	18-Feb-08
SDS35480	Check of Drawings (IDC)	8d	02-Apr-08	14-Apr-08

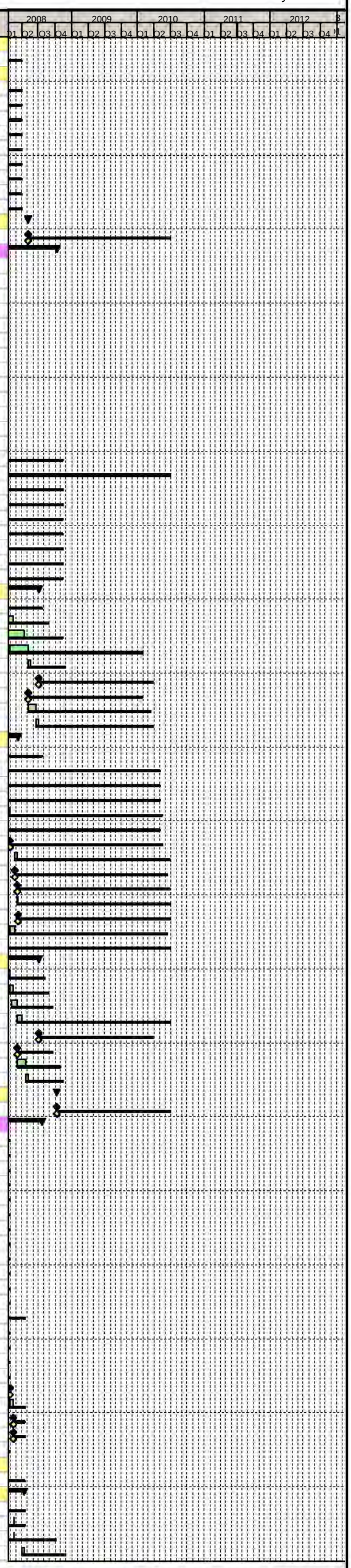

Primary Baseline
Actual Work
Remaining Work
Critical Remaining Work
Baseline Milestone
Milestone

Trams for Edinburgh ...connecting our Capital

Edinburgh Tram Project

SDS FULL DESIGN PROGRAMME @ V26

tie

Activity ID	Activity Name	Original Duration	Start	Finish
SDS35490	Issue Notification Of Completion Letter- Baird Drive Retaining Wall Package to tie	0d		14-Apr-08
SDS35510	Issue Detailed Design Package to CAT II or CAT III Checker (as appropriate)	0d		18-Feb-08
SDS35520	Bridge CATII or CAT III Review Period	19d	19-Feb-08	17-Mar-08
SDS35580	Receive and Incorporate CATII or CATIII Check Comments	9d	17-Mar-08	01-Apr-08
SDS81290	Delay due to VO231 Balgreen Road Redesign	139d	08-May-07 A	03-Dec-07 A
Baird Drive Retaining Wall Design Package For Construction / Fabrication		0d	23-Jul-08	23-Jul-08
SDS35660	Issue Baird Drive Retaining Wall Specification clauses For Construction	0d		23-Jul-08
W07 Balgreen Road Retaining Wall One (Task700.2.12)		122d	30-Mar-06 A	15-Sep-06 A
SDS53490	Collate Base Data on Alignment & Topo survey	19d	30-Mar-06 A	28-Apr-06 A
SDS53500	Define Clearances	5d	02-May-06 A	08-May-06 A
SDS53510	Develop Preliminary Structures Options	18d	02-May-06 A	26-May-06 A
SDS53520	Options Review	5d	30-May-06 A	05-Jun-06 A
SDS53530	Produce Draft GA (AIP) Drg Showing Preferred Option	12d	12-May-06 A	31-May-06 A
SDS53540	Issue Balgreen Rd RW1 Draft GA (AIP) Drg to tie	0d		31-May-06 A
SDS53550	Select Preferred Design Option in Liaison with tie	5d	01-Jun-06 A	07-Jun-06 A
SDS53560	Update Base Data on Alignment & Topo Survey	2d	01-Jun-06 A	02-Jun-06 A
SDS53570	Draft AIP Document Text	5d	01-Jun-06 A	07-Jun-06 A
SDS53580	Update AIP GA Drgs	8d	06-Jun-06 A	15-Jun-06 A
SDS53590	Check of AIP Document	2d	08-Jun-06 A	09-Jun-06 A
SDS53600	Issue AIP Document to Technical Approval Authority (TAA) Form A	0d		15-Jun-06 A
SDS53610	Issue AIP Document to Planning Department	0d		15-Jun-06 A
SDS53620	TAA Review AIP & Comment	51d	19-Jun-06 A	01-Sep-06 A
SDS53640	Receive AIP Comments from TAA	0d		02-Sep-06 A
SDS53660	Incorporate AIP Comments from TAA	21d	16-Aug-06 A	15-Sep-06 A
W09 Balgreen Road Retaining Wall (Task700.2.12)		629d	30-Mar-06 A	15-Sep-08
SDS53720	Collate Base Data on Alignment & Topo survey	19d	30-Mar-06 A	28-Apr-06 A
SDS53730	Define Clearances	5d	02-May-06 A	08-May-06 A
SDS53740	Develop Preliminary Structures Options	18d	02-May-06 A	26-May-06 A
SDS53750	Options Review	5d	30-May-06 A	05-Jun-06 A
SDS53760	Produce Draft GA (AIP) Drg Showing Preferred Option	8d	30-May-06 A	09-Jun-06 A
SDS53770	Issue Balgreen Rd RW2 Draft GA (AIP) Drg to tie	0d		09-Jun-06 A
SDS53780	Select Preferred Design Option in Liaison with tie	5d	12-Jun-06 A	16-Jun-06 A
SDS53790	Update Base Data on Alignment & Topo Survey	2d	12-Jun-06 A	13-Jun-06 A
SDS53800	Draft AIP Document Text	5d	12-Jun-06 A	16-Jun-06 A
SDS53810	Update AIP GA Drgs	2d	15-Jun-06 A	16-Jun-06 A
SDS53820	Check of AIP Document	1d	16-Jun-06 A	16-Jun-06 A
SDS53830	Issue AIP Document to Technical Approval Authority (TAA) Form A	0d		16-Jun-06 A
SDS53840	Issue AIP Document to Planning Department	0d		16-Jun-06 A
SDS53850	TAA Review AIP & Comment	51d	19-Jun-06 A	01-Sep-06 A
SDS53870	Receive AIP Comments from TAA	0d		01-Sep-06 A
SDS53890	Incorporate AIP Comments from TAA	9d	01-Sep-06 A	14-Sep-06 A
SDS53910	Re-issue AIP to TAA	0d		24-Nov-06 A
SDS53920	TAA Review AIP	5d	27-Nov-06 A	01-Dec-06 A
SDS53930	TAA Sign Off AIP Document	0d		01-Dec-06 A
SDS53940	Issue AIP to Structures Detailed Design Team	0d		01-Dec-06 A
SDS68320	Baird Drive On Hold, Possible Revisit to Design	38d	29-Sep-06 A	24-Nov-06 A
Balgreen Road Retaining Wall Structure Detailed Design		361d	10-Jan-07 A	06-Jun-08
SDS51160	Retaining Wall Detailed Design	275d	10-Jan-07 A	10-Mar-08
SDS51170	Retaining Wall Detailed Design Draughting	52d	22-Jan-08	09-Apr-08
SDS51190	Check of Drawings (IDC)	9d	23-May-08	06-Jun-08
SDS51200	Issue Notification Of Completion Letter- Balgreen Road Retaining Wall Package to tie	0d		06-Jun-08
SDS51220	Issue Detailed Design Package to CAT II or CAT III Checker (as appropriate)	0d		09-Apr-08
SDS51230	Bridge CATII or CAT III Review Period	19d	10-Apr-08	08-May-08
SDS51260	Receive CATII or CATIII Check Comments	0d		08-May-08
SDS51290	Receive and Incorporate CATII or CATIII Check Comments	9d	09-May-08	22-May-08
SDS81300	Delay due to VO231 Balgreen Road Redesign	166d	08-May-07 A	21-Jan-08
Balgreen Road Retaining Wall Design Package For Construction / Fabrication		0d	15-Sep-08	15-Sep-08
SDS51370	Issue Balgreen Road Retaining Wall Specification clauses For Construction	0d		15-Sep-08
Balgreen Road Retaining Wall Preliminary Design Milestones		134d	20-Oct-06 A	07-May-07 A
SDS40440	Update Available Base Data/Info Re Alignment/Topo Survey etc	125d	20-Oct-06 A	07-May-07 A
SDS51150	Retaining Wall Analysis	19d	05-Dec-06 A	09-Jan-07 A
BAR - EDP - Section 5B (Task700.3)		986d	19-Sep-05 A	28-Jul-09
Sub Section Wide		604d	07-Mar-06 A	17-Jul-08
Sub Section Wide IDC		22d	25-Feb-08	25-Mar-08
A40521	Subsection Wide IDC	21d	25-Feb-08	25-Mar-08
Design Assurance Review		10d	28-Mar-08	10-Apr-08
SDS68030	Produce Design Assurance Statement	9d	28-Mar-08	10-Apr-08
Consents & Approvals		359d	22-Feb-07 A	17-Jul-08
Prior Approvals		308d	09-Apr-07 A	24-Jun-08
Combined Section Prior Approval		60d	01-Apr-08	24-Jun-08
A25790	Issue Combined Package 5B for Prior Approval to CEC	0d		01-Apr-08
A25800	Receive Combined Package 5B Comments From CEC	0d		27-May-08
A25820	Prior Approval Granted for Section 5B Combined Package	0d		24-Jun-08
A40600	CEC Approval Period - 5B Combined Package	38d	01-Apr-08	27-May-08
A40610	Update5B Combined Package to CEC Comments	19d	27-May-08	24-Jun-08
Batch 5/11		52d	08-Feb-08	22-Apr-08
SDS76080	Batch 5/11 Formal Approval Period	38d	22-Feb-08	21-Apr-08
SDS76090	Issue Batch 5/11 For Approval to CEC	0d	22-Feb-08	
SDS76100	Receive CEC Prior Approval For Batch 5/11	0d	22-Apr-08	
SDS76130	Batch 5/11 Balgreen Road to Carrick Knowe - Collation of Planning Drawings	9d	08-Feb-08*	21-Feb-08
Batch 5/12		54d	14-Mar-08	29-May-08
SDS75660	Batch 5/12 Formal Approval Period	38d	01-Apr-08	28-May-08
SDS75670	Issue Batch 5/12 For Approval to CEC	0d	01-Apr-08	
SDS75680	Receive CEC Prior Approval For Batch 5/12	0d	29-May-08	
SDS75710	Batch 5/12 Carrick Knowe Bridge - Collation of Planning Drawings	9d	14-Mar-08	31-Mar-08
Batch 5/14		52d	14-Jan-08	26-Mar-08
SDS75720	Batch 5/14 Formal Approval Period	38d	28-Jan-08	25-Mar-08
SDS75730	Issue Batch 5/14 For Approval to CEC	0d	28-Jan-08	
SDS75740	Receive CEC Prior Approval For Batch 5/14	0d	26-Mar-08	
SDS75770	Batch 5/14 Saughton Tramstop and Broomhouse Drive - Collation of Planning Drawings	9d	14-Jan-08	25-Jan-08
Batch 5/15		50d	03-Mar-08	12-May-08
SDS75780	Batch 5/15 Formal Approval Period	35d	17-Mar-08	09-May-08
SDS75790	Issue Batch 5/15 For Approval to CEC	0d	17-Mar-08	
SDS75800	Receive CEC Prior Approval For Batch 5/15	0d	12-May-08	
SDS75830	Batch 5/15 Bankhead Tramstop - Collation of Planning Drawings	9d	03-Mar-08*	14-Mar-08
Batch 5/16		52d	08-Feb-08	22-Apr-08
SDS75840	Batch 5/16 Formal Approval Period	38d	22-Feb-08	21-Apr-08
SDS75850	Issue Batch 5/16 For Approval to CEC	0d	22-Feb-08	
SDS75860	Receive CEC Prior Approval For Batch 5/16	0d	22-Apr-08	
SDS75890	Batch 5/16 Edinburgh Park Station Tramstop - Collation of Planning Drawings	9d	08-Feb-08*	21-Feb-08
Batch 5/17		52d	29-Jan-08	10-Apr-08
SDS75900	Batch 5/17 Formal Approval Period	38d	12-Feb-08	09-Apr-08
SDS75910	Issue Batch 5/17 For Approval to CEC	0d	12-Feb-08	

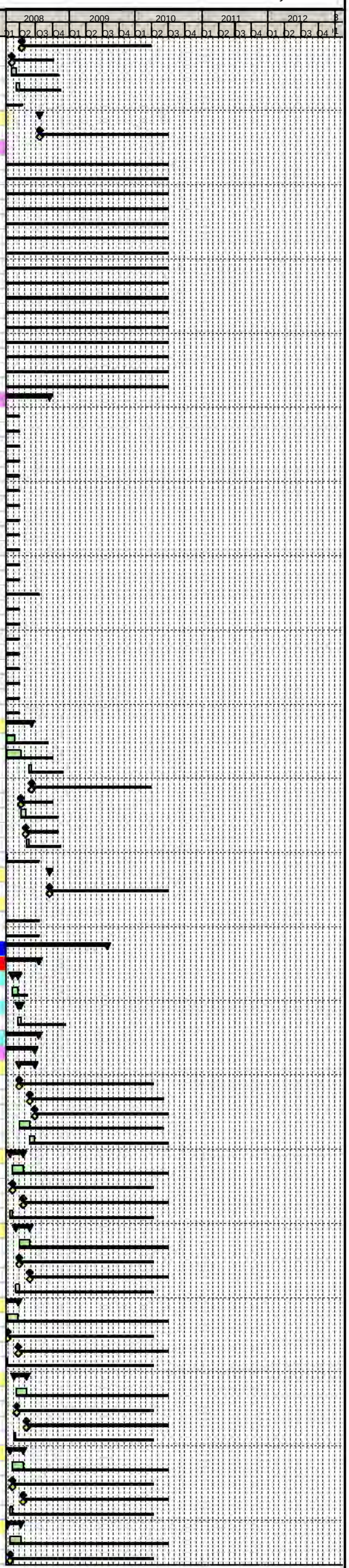

Primary Baseline
Actual Work
Remaining Work
Critical Remaining Work
Baseline Milestone
Milestone

Trams for Edinburgh
connecting our Capital

Edinburgh Tram Project

SDS FULL DESIGN PROGRAMME @ V26

tie

Activity ID	Activity Name	Original Duration	Start	Finish
SDS75920	Receive CEC Prior Approval For Batch 5/17	0d	10-Apr-08	
SDS75950	Batch 5/17 Edinburgh Park Station Bridge - Collation of Planning Drawings	9d	29-Jan-08*	11-Feb-08
Batch 5/18		52d	08-Feb-08	22-Apr-08
SDS75960	Batch 5/18 Formal Approval Period	38d	22-Feb-08	21-Apr-08
SDS75970	Issue Batch 5/18 For Approval to CEC	0d	22-Feb-08	
SDS75980	Receive CEC Prior Approval For Batch 5/18	0d	22-Apr-08	
SDS76010	Batch 5/18 Edinburgh Park Central tramstop - Collation of Planning Drawings	9d	08-Feb-08*	21-Feb-08
Roads, Track, OLE, Landscaping, Street Lighting		40d	14-Jan-08	07-Mar-08
SDS30090	Informal Consultation With CEC & tie Over Prior Approval for Roads, Track, OLE, Landscaping and Street Lighting	38d	14-Jan-08	07-Mar-08
Tram Stop Balgreen		40d	14-Jan-08	07-Mar-08
A40770	Informal Consultation With CEC & tie over Prior Approval Tram Stop Balgreen	38d	14-Jan-08	07-Mar-08
Tram Stop Saughton		40d	14-Jan-08	07-Mar-08
A40800	Informal Consultation With CEC & tie over Prior Approval Tram Stop Saugton	38d	14-Jan-08	07-Mar-08
Tram Stop Bankhead		40d	14-Jan-08	07-Mar-08
A40830	Informal Consultation With CEC & tie over Prior Approval Tram Stop Bankhead	38d	14-Jan-08	07-Mar-08
Tram Stop Edinburgh Park Station		72d	17-May-07 A	24-Aug-07 A
A40860	Informal Consultation With CEC & tie over Prior Approval Tram Stopn Edinburgh Park Station	67d	17-May-07 A	24-Aug-07 A
Tram Stop Edinburgh Park Central		41d	17-May-07 A	12-Jul-07 A
A40890	Informal Consultation With CEC & tie over Prior Approval Tram Stop Edinburgh Park Central	38d	17-May-07 A	12-Jul-07 A
Tram Jenners Depository Substation		120d	29-Oct-07 A	23-Apr-08
A41260	Informal Consultation With CEC & tie over Prior Approval Tram Jenners Depository Substation	55d	29-Oct-07 A	25-Jan-08
A41270	Prior Approval Tram Jenners Depository Substation	0d		23-Apr-08
Tram Bankhead Drive Substation		277d	10-Apr-07 A	12-May-08
A41280	Informal Consultation With CEC & tie over Prior Approval Tram Bankhead Drive Substation	178d	10-Apr-07 A	14-Jan-08
A41290	Prior Approval Tram Bankhead Drive Substation	0d		12-May-08
Carrick Knowe Superstructure		40d	01-Feb-08	27-Mar-08
447	Commence Carrick Knowe Superstructure Informal Consultation With CEC & tie Over Prior Approval	38d	01-Feb-08	27-Mar-08
Saughton Road Assessment		182d	08-May-07 A	25-Jan-08
336	Issue Saughton Road Assessment Report to CEC	0d	02-Jul-07 A	
428	Receive Saughton Road Assessment Report comments from CEC	0d	14-Jan-08	
457	CEC Saughton Road Assessment Report Review Period	125d	02-Jul-07 A	14-Jan-08
467	Commence Saughton Road Informal Consultation With CEC & tie Over Prior Approval	17d	08-May-07 A	01-Jun-07 A
489	Incorporate CEC comments into Saughton Road Assessment Report	9d	14-Jan-08	25-Jan-08
South Gyle Access Road Bridge Superstructure		58d	29-Oct-07 A	25-Jan-08
SDS65540	Commence South Gyle Access Road Bridge Informal Consultation With CEC & tie Over Prior Approval	55d	29-Oct-07 A	25-Jan-08
Bankhead Drive Retaining Wall		40d	14-Nov-07 A	18-Jan-08
SDS64560	Commence Bankhead Drive RW Informal Consultation With CEC & tie Over Prior Approval	39d	14-Nov-07 A	18-Jan-08
Broomhouse Road Assessment		39d	09-Apr-07 A	01-Jun-07 A
320	Receive Broomhouse Road Assessment Report comments from CEC	0d	18-May-07 A	
331	Incorporate CEC comments into Broomhouse Road Assessment Report	9d	18-May-07 A	01-Jun-07 A
458	Issue Broomhouse Road Assessment Report to CEC	0d	27-Apr-07 A	
519	CEC Broomhouse Road Assessment Report Review Period	13d	27-Apr-07 A	17-May-07 A
529	Commence Broomhouse Road Informal Consultation With CEC & tie Over Prior Approval	13d	09-Apr-07 A	27-Apr-07 A
Technical Approvals		359d	22-Feb-07 A	17-Jul-08
Carrick Knowe Review Period (TAA)		90d	01-Feb-08	05-Jun-08
236	Issue Carrick Knowe Superstructure Design Package to TAA	0d	28-Mar-08	
237	TAA Carrick Knowe Superstructure Design Package Review Period	38d	28-Mar-08	22-May-08
238	Receive Carrick Knowe Superstructure Design Package comments from TAA	0d	23-May-08	
239	Incorporate TAA comments into Carrick Knowe Superstructure Design Package	9d	23-May-08	05-Jun-08
257	Commence Carrick Knowe Superstructure Informal Consultation With CEC Over Technical Approval	38d	01-Feb-08	27-Mar-08
Carrick Knowe Review Period (Network Rail)		30d	06-Jun-08	17-Jul-08
241	Issue Design and Check Certificate to Network Rail For Comment	0d	06-Jun-08	
242	Network Rail Comment Period	19d	06-Jun-08	03-Jul-08
243	Receive Superstructure Design Package comments from Network Rail	0d	04-Jul-08	
244	Incorporate Network Rail comments into Superstructure Design Package	9d	04-Jul-08	17-Jul-08
Saughton Road Assessment Review Period (TAA)		43d	09-Mar-07 A	08-May-07 A
297	Commence Saughton Road Informal Consultation With CEC Over Technical Approval	38d	09-Mar-07 A	08-May-07 A
South Gyle Access Road Bridge Review (TAA)		313d	22-Feb-07 A	14-May-08
SDS36080	Issue South Gyle Access Road Bridge Detailed Design Package to TAA	0d		29-Feb-08
SDS36110	TAA Approval Period	38d	03-Mar-08	29-Apr-08
SDS36150	Receive TAA Comments	0d		29-Apr-08
SDS36180	Incorporate TAA Comments	9d	30-Apr-08	14-May-08
SDS62980	Commence South Gyle Access Road Bridge Informal Consultation With CEC Over Technical Approval	38d	22-Feb-07 A	20-Apr-07 A
Bankhead Drive Retaining Wall Structure Review (TAA)		190d	02-Aug-07 A	02-May-08
SDS57220	Issue Bankhead Drive RW Detailed Design Package to TAA	0d		20-Feb-08
SDS57250	TAA Approval Period	38d	21-Feb-08	18-Apr-08
SDS57290	Receive TAA Comments	0d		18-Apr-08
SDS57320	Incorporate TAA Comments	9d	21-Apr-08	02-May-08
SDS62990	Commence Bankhead Drive RW Informal Consultation With CEC Over Technical Approval	103d	02-Aug-07 A	14-Jan-08
Broomhouse Road Assessment Review Period (TAA)		39d	09-Apr-07 A	01-Jun-07 A
308	Issue Broomhouse Road Assessment Report to TAA	0d	27-Apr-07 A	
309	TAA Broomhouse Road Assessment Report Review Period	13d	27-Apr-07 A	17-May-07 A
310	Receive Broomhouse Road Assessment Report comments from TAA	0d	18-May-07 A	
311	Incorporate TAA comments into Broomhouse Road Assessment Report	9d	18-May-07 A	01-Jun-07 A
469	Commence Broomhouse Road Informal Consultation With CEC Over Technical Approval	13d	09-Apr-07 A	27-Apr-07 A
Edinburgh Park Station Viaduct Review Period (TAA)		87d	03-Oct-07 A	11-Feb-08
72	Issue Edinburgh Park Station Superstructure Design Package to TAA	0d	23-Nov-07 A	
73	TAA Edinburgh Park Station Superstructure Design Package Review Period	38d	26-Nov-07 A	28-Jan-08
74	Receive Edinburgh Park Station Superstructure Design Package comments from TAA	0d	29-Jan-08	
75	Incorporate TAA comments into Edinburgh Park Station Superstructure Design Package	9d	29-Jan-08	11-Feb-08
93	Commence Edinburgh Park Station Superstructure Informal Consultation With CEC Over Technical Approval	36d	03-Oct-07 A	23-Nov-07 A
Edinburgh Park Station Viaduct Review Period (Network Rail)		30d	12-Feb-08	24-Mar-08
77	Issue Design and Check Certificate to Network Rail For Comment	0d	12-Feb-08	
78	Network Rail Comment Period	19d	12-Feb-08	10-Mar-08
79	Receive Superstructure Design Package comments from Network Rail	0d	11-Mar-08	
80	Incorporate Network Rail comments into Superstructure Design Package	9d	11-Mar-08	24-Mar-08
Roads Technical Approval		311d	03-Apr-07 A	19-Jun-08
SDS30100	Issue Roads Design to Roads Authority for Approval	0d		25-Mar-08
SDS30110	Roads Authority Approval Period	38d	26-Mar-08	21-May-08
SDS30120	Receive Roads Authority Comments	0d		21-May-08
SDS30130	Update to Roads Authority Comments	19d	22-May-08	19-Jun-08
SDS30140	Roads Authority Informal Consultation	38d	03-Apr-07 A	01-Jun-07 A
SDS30210	Roads Technical Approval Granted	0d		19-Jun-08
Drainage Technical Approval		110d	19-Dec-07 A	29-May-08
SDS72840	Roads Authority Informal Consultation For Drainage	58d	19-Dec-07 A	25-Mar-08
SDS72850	Issue Drainage Design to Roads Authority for Approval	0d		25-Mar-08
SDS72860	Roads Authority Approval Period For Drainage	38d	26-Mar-08	21-May-08
SDS72870	Receive Roads Authority Comments For Drainage	0d		21-May-08
SDS72880	Update to Roads Authority Comments For Drainage	5d	22-May-08	29-May-08
SDS72890	Drainage Technical Approval Granted	0d		29-May-08
Track (Task700.3.1)		480d	21-Mar-06 A	08-Feb-08
A3640	First Pass Mx Horizontal and Vertical Alignment	15d	21-Mar-06 A	11-Apr-06 A
A3650	Handover Alignment Design P Way to Roads	0d		12-Apr-06 A

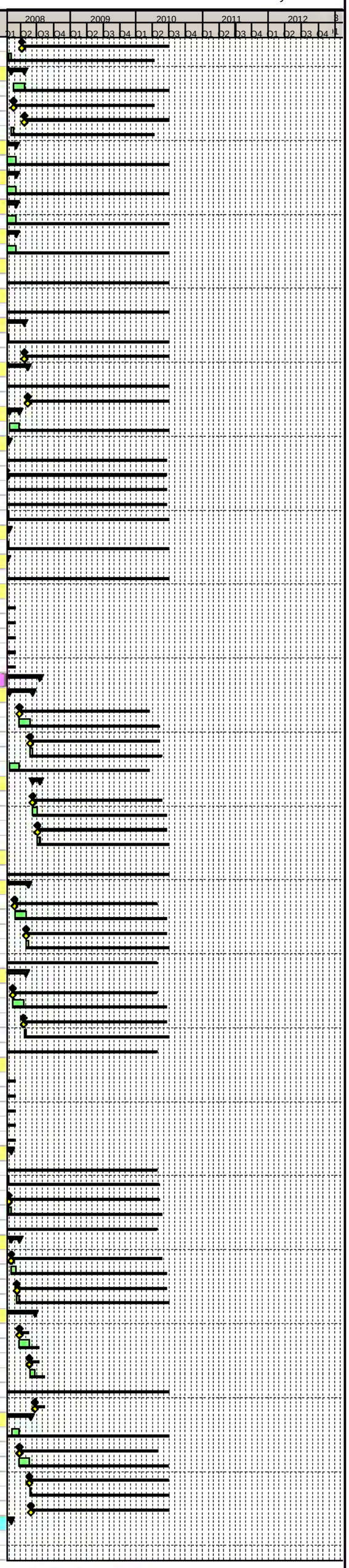

Primary Baseline
Actual Work
Remaining Work
Critical Remaining Work
Baseline Milestone
Milestone

Trams for Edinburgh ..connecting our Capital

Edinburgh Tram Project

SDS FULL DESIGN PROGRAMME @ V26

tie

Activity ID	Activity Name	Original Duration	Start	Finish
A3660	Coordination Meeting/Workshop Between PWay/Roads & Resolution of Major Conflicts	1d	12-Apr-06 A	12-Apr-06 A
SDS29810	Revise Alignment to Match Roads First Pass Vertical	1d	09-Feb-07 A	09-Feb-07 A
SDS29860	Handover Alignment Design Track to Roads	0d		13-Feb-07 A
SDS30230	Revise Alignment to Inc. Preliminary Design Comments	113d	06-Jul-06 A	22-Dec-06 A
SDS30250	Handover Alignment Design Track to Roads	0d		22-Dec-06 A
SDS57100	Issue Track Alignment Design to tie Section 5B	0d		23-Mar-07 A
SDS59600	IDC Track Design	7d	13-Mar-07 A	21-Mar-07 A
SDS60990	Revise Track Alignment to Inc. Modelling Changes	4d	15-Jan-07 A	18-Jan-07 A
SDS70500	tie Approval Period	19d	26-Mar-07 A	24-Apr-07 A
SDS70510	Receive tie Comments	0d	20-Apr-07 A	
SDS70520	Incorporate tie Comments	1d	04-May-07 A	05-May-07 A
SDS75160	Address tie Comments, NR Accom, Other Revisions, IDC & Section Submission Package	120d	06-Aug-07 A	08-Feb-08
VO44 NEL Proposed Development Levels		6d	01-Sep-06 A	08-Sep-06 A
SDS73080	Amend 5B Alignment in NEL area	6d	01-Sep-06 A	08-Sep-06 A
Roads, Street Lighting & Landscaping (Task700.3.2)		586d	07-Mar-06 A	24-Jun-08
A3670	Route Appreciation/Junct Layout & Determine with tie & CEC Works Extent	35d	16-Mar-06 A	10-May-06 A
A3680	Frontage Surveys	30d	07-Mar-06 A	21-Apr-06 A
A3690	Set Up Mx Models	1d	10-May-06 A	10-May-06 A
A3700	Produce Preliminary Horizontal Road Alignment Design (Inc Lanes & Parking Zones)	11d	11-May-06 A	26-May-06 A
A3710	Preliminary Road Safety Audit	1d	30-Jun-06 A	30-Jun-06 A
A3720	Review & Amend TRO Drawings & Schedules for Modifications Required Post Prelim Design	3d	12-Jun-06 A	14-Jun-06 A
A3730	Handover Alignment Design Roads to Pway	0d		30-Jun-06 A
A3740	Coordination Meeting/Workshop Between Roads & Pway Teams	1d	30-Jun-06 A	30-Jun-06 A
A5560	Undertake Road Marking, Pedestrian Req & Traffic Signalling Design	5d	30-May-06 A	05-Jun-06 A
SDS29820	Produce First Pass Vertical Alignment	3d	31-Jan-07 A	02-Feb-07 A
SDS29840	Handover Alignment Design Roads to Pway	0d		08-Feb-07 A
SDS29870	Revise Vertical Alignment to Match Final Track Alignment	2d	01-Feb-07 A	02-Feb-07 A
SDS29880	Horizontal & Vertical Alignment Design Complete	0d		02-Feb-07 A
SDS29890	Issue Notification Of Completion Letter- Roads Design to tie for Approval Section 5B	0d		01-Jun-07 A
SDS29900	Cross Check all Horizontal Design Aspects With Vertical Alignment	2d	01-Feb-07 A	02-Feb-07 A
SDS29940	Issue Construction Drawings	0d		24-Jun-08
SDS29950	Road Safety Audit Stage 2 (Intermediate)	9d	19-Apr-07 A	02-May-07 A
SDS29960	Insert Intermediate RSA Comments	10d	17-May-07 A	01-Jun-07 A
SDS29970	Produce Site Clearance Drawings & Schedule	4d	31-Jan-07 A	05-Feb-07 A
SDS29980	Produce Fencing, Barriers & Guardrails Design	3d	31-Jan-07 A	02-Feb-07 A
SDS29990	Produce Street Lighting Design (& Liaise With OLE)	82d	09-Feb-07 A	15-Jun-07 A
SDS30000	Produce Traffic Signal Only Ducting	6d	01-Mar-07 A	08-Mar-07 A
SDS30010	Produce Soft Landscaping Design	9d	18-May-07 A	01-Jun-07 A
SDS30020	Produce Traffic Signals Layout	2d	31-Jan-07 A	01-Feb-07 A
SDS30030	Produce Traffic Signs Design (Signs, Markings, Signals)	2d	01-Feb-07 A	02-Feb-07 A
SDS30040	Produce Earthworks Design	88d	13-Aug-07 A	21-Dec-07 A
SDS30260	Revise Alignment to Inc. Final Track Horizontal Alignment (Horizontal Design Freeze) & Issue to Substn Designers	9d	17-Jan-07 A	30-Jan-07 A
SDS30270	Produce Kerbs, Footway & Paved Area Design	2d	01-Feb-07 A	02-Feb-07 A
SDS30280	Produce Pavement Design	56d	08-May-07 A	31-Jul-07 A
SDS56610	Issue Notification Of Completion Letter- Hard & Soft Landscaping Design to tie Section 5B	0d		25-Jun-07 A
SDS56850	Issue Notification Of Completion Letter- Street Lighting Design (Inc. Any OLE Combined Pole Design) to tie Section 5B	0d		19-Jun-07 A
SDS59380	Compile Planning Drawings	6d	24-May-07 A	01-Jun-07 A
SDS59810	Advise Track, Stops, Modellers Changes To Accom RSA1 & PD Comments	7d	05-Dec-06 A	13-Dec-06 A
SDS59820	Pass Guidance/Envelope To Track & Others As Necessary	0d		13-Dec-06 A
SDS61000	Revise Horizontal to Inc. Track Horizontal Alignment, RSA1 & PD Comments	6d	22-Dec-06 A	08-Jan-07 A
SDS61010	Revise Alignment to Inc. Minor Changes From Traffic Modelling	6d	08-Jan-07 A	15-Jan-07 A
SDS67190	Street Lighting Survey Work	60d	03-Jul-06 A	29-Sep-06 A
SDS69710	Produce Hard Landscaping Design	50d	10-Apr-07 A	25-Jun-07 A
SDS80080	Final RSA	9d	03-Mar-08	14-Mar-08
SDS80090	Incorporate Final RSA Comments	5d	17-Mar-08	25-Mar-08
VO222 Subsection 5B Edinburgh Park Bus Stop		35d	16-Apr-07 A	01-Jun-07 A
SDS73670	Amendment of Tram Stop Design to Accomodate Late Requirement from CEC/TEL	31d	16-Apr-07 A	01-Jun-07 A
SDS73680	Amendment of Roads Design to Accomodate Late Requirement from CEC/TEL	31d	16-Apr-07 A	01-Jun-07 A
Drainage		254d	12-Mar-07 A	10-Mar-08
SDS71870	Hydraulic Modelling & First Pass Drainage Design	57d	12-Mar-07 A	08-Jun-07 A
SDS71880	Receipt of Drainage Survey Information	0d	14-Jan-08*	
SDS71890	Outfall Consent/Approval from SW	0d		25-Feb-08*
SDS71900	Outfall Consent/Approval from CEC	0d		14-Jan-08*
SDS71910	Outfall Consent/Approval from SEPA	0d		10-May-07 A
SDS71920	Compile Drainage Package	6d	12-Sep-07 A	19-Sep-07 A
SDS71930	Issue Drainage Design Completion Letter to tie for Approval Section 5B	0d		27-Sep-07 A
SDS73260	Final Detailed Drainage Design	49d	29-Jun-07 A	11-Sep-07 A
SDS80560	Final Detailed Drainage Design	64d	12-Nov-07 A	21-Feb-08
SDS80570	Compile Drainage Package	1d	22-Feb-08	22-Feb-08
SDS80580	Issue Drainage Design Completion Letter to tie for Approval Section 5B	0d		22-Feb-08
SDS80590	Confirm Drainage and Amend if Required	9d	26-Feb-08	10-Mar-08
SDS80970	Receipt of WEBS System Inputs	0d		10-Dec-07 A
Boundary & Accomodation Works (Task700.3.3)		91d	26-Mar-07 A	30-Jul-07 A
SDS42430	Detailed Design of Boundary & Accomodation Works	82d	26-Mar-07 A	30-Jul-07 A
SDS42440	Issue Notification Of Completion Letter- Detailed Design of Boundary & Accomodation Works Section 5B	0d		30-Jul-07 A
Utilities (Task700.3.4)		476d	13-Mar-06 A	25-Jan-08
A12420	Close Out PD Issues and Re-issue PD Drawings to SUCs	23d	14-Aug-06 A	18-Sep-06 A
A12430	Design Development	330d	29-Aug-06 A	25-Jan-08
A12440	Initial Consultations With SUCs and IDTs	38d	29-Aug-06 A	23-Oct-06 A
A12450	Access to MUDFA and Others	113d	04-Oct-06 A	29-Mar-07 A
A12470	IDC	10d	15-Mar-07 A	29-Mar-07 A
A12480	Issue DD to SUC For Approval	0d		29-Mar-07 A
A12490	SUC Approval Period	96d	30-Mar-07 A	27-Aug-07 A
SDS67170	Consult With SUCs on DD	113d	04-Oct-06 A	29-Mar-07 A
SDS67180	MDFA Appointment	0d		03-Oct-06 A
UTIL1300	Issue to Statutory Utility Companies (SUCs)	0d		30-Jun-06 A
UTIL140	Section 5B - Pre-Preliminary Design (Utilities)	71d	13-Mar-06 A	30-Jun-06 A
OLE		2d	19-Jun-06 A	20-Jun-06 A
A4180	Preliminary Review of OLE Pole Positioning for Utility Survey Scope Definition	2d	19-Jun-06 A	20-Jun-06 A
VO255 OLE Rework for Section 5B (Internal)		15d	10-Sep-07 A	28-Sep-07 A
A487218	OLE Rework for Section 5B	14d	10-Sep-07 A	28-Sep-07 A
VO263 OLE Rework at Balgreen Turnback Siding (Internal)		5d	24-Sep-07 A	28-Sep-07 A
A487238	OLE Rework Due to Track Changes	5d	24-Sep-07 A	28-Sep-07 A
VO266 OLE Rework at Carrick Knowe (Internal - Not PM Approved)		25d	14-Jan-08	15-Feb-08
A487258	OLE Rework Due to Track Changes	23d	14-Jan-08	15-Feb-08
VO267 OLE Pole Loading at Carrick Knowe (Internal - Not PM Approved)		25d	14-Jan-08	15-Feb-08
A487268	OLE Rework Due to Tack Changes	23d	14-Jan-08	15-Feb-08
TRO's		570d	01-Apr-06 A	26-Jun-08
SDS33710	Collate Exisiting TROs	65d	01-Apr-06 A	12-Jul-06 A
SDS33720	Receive Preliminary Roads Design	0d		12-Jul-06 A
SDS82090	Interim TRO Design Section 5B	5d	28-Jan-08*	01-Feb-08
SDS82100	Final TRO Design Section 5B	5d	20-Jun-08	26-Jun-08
BAR - SRN		986d	19-Sep-05 A	28-Jul-09

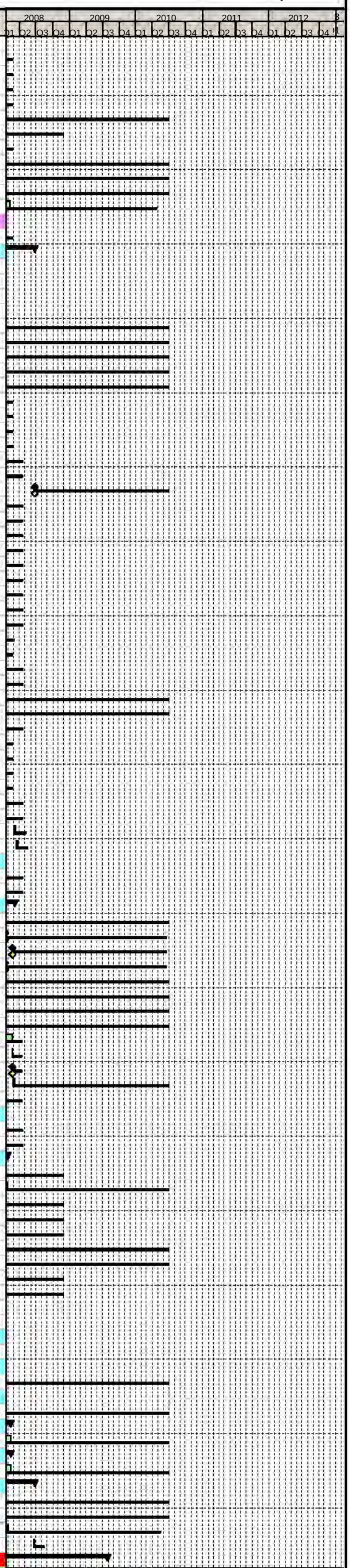

Primary Baseline
Actual Work
Remaining Work
Critical Remaining Work
Baseline Milestone
Milestone

Trams for Edinburgh ...connecting our Capital

Edinburgh Tram Project

SDS FULL DESIGN PROGRAMME @ V26

tie

Activity ID	Activity Name	Original Duration	Start	Finish
CON-0790	Requirements Definition (Contract Dates)	62d	19-Sep-05 A	19-Dec-05 A
Tram Stop Balgreen (Task700.3.5)		815d	16-May-06 A	28-Jul-09
A26700	Prepare Tram Stop Planning Submission Drawings for Issue to Planning Drawings Team	87d	07-Aug-07 A	14-Dec-07 A
A26710	Produce Engineering Detailed Design Drawings	10d	03-Dec-07 A	17-Dec-07 A
A26720	Compile Planning Drawings Tram Stop Balgreen	8d	10-Dec-07 A	19-Dec-07 A
A26740	Issue Notification Of Completion Letter- Balgreen Tram Stop Design to tie	0d		19-Dec-07 A
A26760	Tram Stop Design Complete - Drawings Issued for Construction	0d		24-Jun-08
A27620	Site Visit with tie & CEC To Review Preliminary Design	1d	02-Jul-07 A	02-Jul-07 A
A28220	Addressing PD Comments	3d	20-Sep-06 A	22-Sep-06 A
A44920	Prepare Detailed Design Stop Drawings	104d	06-Jul-07 A	10-Dec-07 A
A47980	Produce As Built Drawings	200d	03-Oct-08	28-Jul-09
A47990	Receive Final As Built Data from the Contractor	0d		30-Jun-09
A48040	Receive First As Built Data from the Contractor	0d		01-Oct-08*
A48050	Issue Final As Built Drawings	0d		28-Jul-09
A4960	General Arrangement Drawings	19d	16-May-06 A	13-Jun-06 A
A5730	Issue Tram Stop GA Drawings for Balgreen Road	0d		30-Jun-06 A
SDS81310	Delay due to VO231 Balgreen Road Redesign	137d	08-May-07 A	29-Nov-07 A
Tram Jenners Depository Substation (Task700.3.9)		417d	08-May-06 A	20-Dec-07 A
A549030	Preliminary Design of Substation	21d	08-May-06 A	05-Jun-06 A
A549780	Detailed Design Civils	215d	23-Jan-07 A	14-Dec-07 A
A549790	Detailed Architecture Design	215d	23-Jan-07 A	14-Dec-07 A
A549800	IDC on Detailed Design (Inc. Systems Assurance)	4d	17-Dec-07 A	20-Dec-07 A
A549810	Issue Notification Of Completion Letter- Tram Jenner's Depository Substation Planning Submission to tie for Approva	0d		20-Dec-07 A
A550100	Substation Consultation Period	28d	19-Jun-06 A	27-Jul-06 A
A550220	Issue of Jenners Depository Substation Design	0d		30-Jun-06 A
A550320	Receive Confirmation of Substation Location	0d	22-Oct-07 A	
SDS81320	Delay due to VO231 Balgreen Road Redesign	143d	08-May-07 A	10-Dec-07 A
Tram Stop Saughton (Task700.3.6)		831d	24-Apr-06 A	28-Jul-09
A26780	Prepare Tram Stop Planning Submission Drawings For Issue to Planning Drawings Team	57d	02-May-07 A	27-Jul-07 A
A26790	Produce Engineering Detailed Design Drawings	9d	31-Jul-07 A	13-Aug-07 A
A26800	Compile Planning Drawings Tram Stop Saughton	28d	03-Jul-07 A	13-Aug-07 A
A26820	Issue Notification Of Completion Letter- Saughton Tram Stop Design to tie	0d		17-Aug-07 A
A26840	Tram Stop Design Complete - Drawings Issued for Construction	0d		26-Mar-08
A27630	Site Visit with tie & CEC To Review Preliminary Design	1d	02-Jul-07 A	02-Jul-07 A
A28230	Addressing PD Comments	1d	22-Sep-06 A	22-Sep-06 A
A44140	IDC Tram Stop Design for Planning Submission (Inc. Systems Asssurance)	9d	18-Apr-07 A	01-May-07 A
A44930	Prepare Detailed Design Stop Drawings	5d	16-Mar-07 A	23-Mar-07 A
A48060	Produce As Built Drawings	200d	03-Oct-08	28-Jul-09
A48070	Receive Final As Built Data from the Contractor	0d		30-Jun-09
A48080	Receive First As Built Data from the Contractor	0d		01-Oct-08*
A48130	Issue Final As Built Drawings	0d		28-Jul-09
A4970	General Arrangement Drawings	27d	24-Apr-06 A	05-Jun-06 A
A5740	Issue Tram Stop GA Drawings for Saughton Road North	0d		30-Jun-06 A
SDS81150	Address tie and CEC Comments, Other Revisions and IDC	24d	02-Nov-07 A	07-Dec-07 A
Structures		635d	23-Jan-06 A	18-Jul-08
S23 Carrick Knowe Underbridge (NR Ref 090/009-1)		635d	23-Jan-06 A	18-Jul-08
SDS45360	Review of Previous Work	9d	23-Jan-06 A	03-Feb-06 A
SDS45370	Optioneering	14d	06-Feb-06 A	24-Feb-06 A
SDS45380	Initial Design	9d	27-Feb-06 A	10-Mar-06 A
SDS45390	Production of Form A Drawing	5d	06-Mar-06 A	10-Mar-06 A
SDS45400	Issue Form A Drawing to tie	0d		10-Mar-06 A
SDS45410	Checking	5d	13-Mar-06 A	17-Mar-06 A
SDS45420	tie Form A Drawing Review Period	5d	13-Mar-06 A	17-Mar-06 A
SDS45430	Undertake Consultations	19d	13-Mar-06 A	07-Apr-06 A
SDS45440	Receive Form A Drawing Comments from tie	0d		17-Mar-06 A
SDS45450	Incorporate tie Comments into Form A Drawing	5d	20-Mar-06 A	24-Mar-06 A
SDS45460	Production of Form A Document	4d	10-Apr-06 A	13-Apr-06 A
SDS45470	Issue Form A Document to tie	0d		13-Apr-06 A
SDS45480	tie Form A Document Review Period	4d	24-Apr-06 A	27-Apr-06 A
SDS45490	Receive Form A Document Comments from tie	0d		27-Apr-06 A
SDS45500	Incorporate tie Comments into Form A Document	5d	28-Apr-06 A	05-May-06 A
SDS45510	Issue Form A Document & Drawing to TAA	0d		09-May-06 A
SDS45520	TAA Form A Document & Drawing Review Period	26d	08-May-06 A	15-Jun-06 A
SDS45530	Issue Form A Document & Drawing to Planning Department	0d		09-May-06 A
SDS45540	Planning Department Form A Document & Drawing Review Period	36d	08-May-06 A	29-Jun-06 A
SDS45550	Receive Form A Document & Drawing Comments from TAA	0d		15-Jun-06 A
SDS45560	Incorporate TAA Comments into Form A Document & Drawing	10d	16-Jun-06 A	30-Jun-06 A
SDS45590	Issue Drawing & Form A Document to Structures Detailed Design Team	0d		22-Jan-07 A
Preliminary Design Milestones		223d	14-Aug-06 A	02-Jul-07 A
219	Receipt of tie PD Acceptance	0d	02-Jul-07 A	
220	Receipt of Alignment Prelim Design Package	0d	23-Oct-06 A	
221	Receipt of OLE Prelim Design Package	0d	11-Dec-06 A	
222	Receipt of Ground Investigation Data & Interpretative Geotechnical Report	0d	15-Jan-07 A	
223	Receipt of an Approved and Signed AIP document	0d	14-Aug-06 A	
VO193 Carricknowe Bridge Widening for Footpaths PD revisit		143d	18-Jun-07 A	14-Jan-08
231	Revised PD for Carricknowe Bridge due to widening for footpaths	19d	18-Jun-07 A	13-Jul-07 A
232	Issue AIP for Carricknowe Bridge to CEC for Planning	0d		23-Jul-07 A
233	TAA Approval Period	19d	24-Jul-07 A	20-Aug-07 A
240	Issue AIP For Acceptance to TAA	0d		23-Jul-07 A
259	Recieve TAA Comments	0d	17-Sep-07 A	
260	Issue AIP For Acceptance to tie	0d		20-Jul-07 A
263	CEC Planning Approval Period	19d	24-Jul-07 A	20-Aug-07 A
269	Recieve CEC Planning Comments	0d	14-Jan-08*	
270	Issue AIP For Acceptance to NR	0d		23-Jul-07 A
283	NR Approval Period	19d	24-Jul-07 A	20-Aug-07 A
303	Update to comments	52d	17-Sep-07 A	30-Nov-07 A
313	tie Approval Period	20d	23-Jul-07 A	20-Aug-07 A
359	Recieve NR Comments	0d	17-Sep-07 A	
389	Recieve tie Comments	0d	14-Jan-08*	
419	PD Approval completed issue for Detailed Design (TAA approval only)	0d		17-Dec-07 A
Superstructure Detailed Design		399d	29-Aug-06 A	27-Mar-08
225	Superstructure Detailed Design ABORTED DUE TO VO193	178d	29-Aug-06 A	04-Jun-07 A
226	Superstructure Detailed Design Draughting ABORTED DUE TO VO193	142d	23-Oct-06 A	04-Jun-07 A
VO193 Superstructure Detailed Design Restart		132d	17-Sep-07 A	27-Mar-08
227	Issue Superstructure Detailed Design Package to CAT III Checker	0d	18-Dec-07 A	
228	Superstructure CAT III Check	42d	18-Dec-07 A	26-Feb-08
229	Receive & Incorporate CAT III comments	9d	27-Feb-08	11-Mar-08
230	Issue Notification Of Completion Letter- Carrick Knowe Superstructure Design Package to tie	0d		27-Mar-08
235	Superstructure Detailed Design Restart	62d	17-Sep-07 A	17-Dec-07 A
256	Superstructure Detailed Design Draughting Restart	62d	17-Sep-07 A	17-Dec-07 A
SDS62130	IDC	9d	12-Mar-08	27-Mar-08
Substructure Detailed Design		336d	24-Nov-06 A	27-Mar-08
247	Substructure Detailed Design ABORTED DUE TO VO193	138d	24-Nov-06 A	02-Jul-07 A

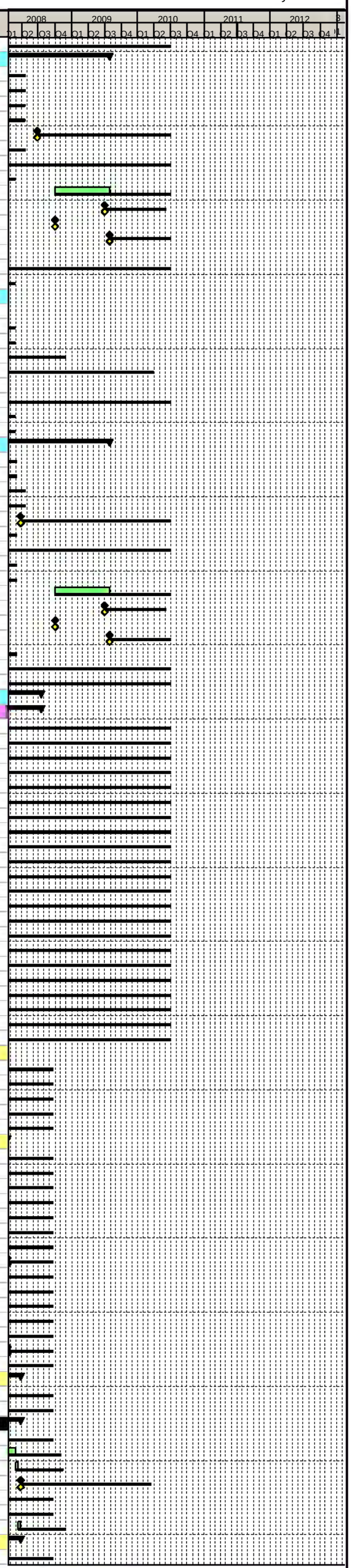

Primary Baseline
Actual Work
Remaining Work
Critical Remaining Work
Baseline Milestone
Milestone

Trams for Edinburgh ..connecting our Capital

Edinburgh Tram Project

SDS FULL DESIGN PROGRAMME @ V26

tie

Activity ID	Activity Name	Original Duration	Start	Finish
248	Substructure Detailed Design Draughting ABORTED DUE TO VO193	91d	12-Feb-07 A	02-Jul-07 A
VO193 Substructure Detailed Design Restart		132d	17-Sep-07 A	27-Mar-08
249	Issue Substructure Detailed Design Package to CAT III Checker	0d	21-Dec-07 A	
250	Substructure CAT III Check	38d	21-Dec-07 A	25-Feb-08
251	Receive & Incorporate CAT III comments	9d	26-Feb-08	10-Mar-08
252	Issue Notification Of Completion Letter- Carrick Knowe Substructure Design Package to tie	0d		27-Mar-08
258	Substructure Detailed Design Draughting Restart	65d	17-Sep-07 A	20-Dec-07 A
287	Substructure Detailed Design Restart	65d	17-Sep-07 A	20-Dec-07 A
Issue Carrick Knowe Design Package For Construction/Fabrication		0d	18-Jul-08	18-Jul-08
267	Issue Carrick Knowe Design Package For Construction/Fabrication	0d	18-Jul-08	
S24 Existing Saughton Road Bridge		528d	27-Feb-06 A	26-Mar-08
SDS45600	Review of Previous Work	9d	27-Feb-06 A	10-Mar-06 A
SDS45610	Optioneering	3d	01-Mar-06 A	04-Mar-06 A
SDS45620	Initial Design	4d	01-Mar-06 A	06-Mar-06 A
SDS45630	Production of AIP Drawing	2d	03-Mar-06 A	06-Mar-06 A
SDS45640	Issue AIP Drawing to tie	0d		07-Mar-06 A
SDS45650	Checking	5d	03-Apr-06 A	07-Apr-06 A
SDS45660	tie AIP Drawing Review Period	15d	08-Mar-06 A	29-Mar-06 A
SDS45670	Undertake Consultations	12d	03-Apr-06 A	21-Apr-06 A
SDS45680	Receive AIP Drawing Comments from tie	0d		07-Apr-06 A
SDS45690	Incorporate tie Comments into AIP Drawing	4d	10-Apr-06 A	13-Apr-06 A
SDS45700	Production of AIP Document	4d	24-Apr-06 A	27-Apr-06 A
SDS45710	Issue AIP Document to tie	0d		27-Apr-06 A
SDS45720	tie AIP Document Review Period	5d	28-Apr-06 A	05-May-06 A
SDS45730	Receive AIP Document Comments from tie	0d		05-May-06 A
SDS45740	Incorporate tie Comments into AIP Document	5d	08-May-06 A	12-May-06 A
SDS45750	Issue AIP Document & Drawing to TAA	0d		12-May-06 A
SDS45760	TAA AIP Document & Drawing Review Period	13d	15-May-06 A	02-Jun-06 A
SDS45770	Issue AIP Document & Drawing to Planning Department	0d		12-May-06 A
SDS45780	Planning Department AIP Document & Drawing Review Period	18d	15-May-06 A	09-Jun-06 A
SDS45790	Recieve AIP Document & Drawing Comments from TAA	0d		02-Jun-06 A
SDS45800	Incorporate TAA Comments into AIP Document & Drawing	5d	05-Jun-06 A	09-Jun-06 A
SDS45810	Recieve AIP Document & Drawing Comments from Planning Department	0d		09-Jun-06 A
SDS45820	Incorporate Planning Department TAA Comments into AIP Document & Drawing	5d	12-Jun-06 A	16-Jun-06 A
SDS45830	Issue AIP Drawing & Document to Structures Detailed Design Team	0d		03-Jul-06 A
Preliminary Design Milestones		94d	14-Aug-06 A	22-Dec-06 A
271	Receipt of tie PD Acceptance	0d	22-Dec-06 A	
272	Receipt of Alignment Prelim Design Package	0d	22-Dec-06 A	
273	Receipt of OLE Prelim Design Package	0d	11-Dec-06 A	
274	Receipt of an Approved and Signed AIP document	0d	14-Aug-06 A	
Structure Assessment		114d	15-Dec-06 A	04-Jun-07 A
276	Structure Assessment	47d	15-Dec-06 A	02-Mar-07 A
277	Issue Structure Assessment Package to CAT I Checker	0d	05-Mar-07 A	
278	Structure Assessment Package CAT I Check	19d	05-Mar-07 A	30-Mar-07 A
279	Receive & Incorporate CAT I comments	9d	10-Apr-07 A	23-Apr-07 A
280	Issue Notification Of Completion Letter- Existing Saughton Road Bridge Assessment Report to tie	0d	04-Jun-07 A	
SDS62150	IDC	8d	24-Apr-07 A	04-May-07 A
Issue Existing Saughton Road Bridge Structure Design Package For Construction / Fabrication		0d	26-Mar-08	26-Mar-08
SDS63060	Issue Existing Saughton Road Bridge Structure Design Package For Construction	0d		26-Mar-08
SRN - SGA		986d	19-Sep-05 A	28-Jul-09
CON-0820	Requirements Definition (Contract Dates)	62d	19-Sep-05 A	19-Dec-05 A
Tram Stop Bankhead (Task700.3.10)		831d	24-Apr-06 A	28-Jul-09
A26860	Prepare Tram Stop Planning Submission Drawings For Issue to Planning Drawings Team	56d	03-May-07 A	27-Jul-07 A
A26870	Produce Engineering Detailed Design Drawings	9d	31-Jul-07 A	13-Aug-07 A
A26880	Compile Planning Drawings Tram Stop Bankhead	32d	03-Jul-07 A	17-Aug-07 A
A26900	Issue Notification Of Completion Letter- Bankhead Tram Stop Design to tie	0d		17-Aug-07 A
A26920	Tram Stop Design Complete - Drawings Issued for Construction	0d		24-Jun-08
A27640	Site Visit with tie & CEC To Review Preliminary Design	1d	02-Jul-07 A	02-Jul-07 A
A27930	Addressing Comments from Preliminary Design	7d	21-Sep-06 A	29-Sep-06 A
A44200	IDC Tram Stop Design for Planning Submission (Inc. Systems Asssurance)	9d	19-Apr-07 A	02-May-07 A
A44940	Prepare Detailed Design Stop Drawings	5d	21-Mar-07 A	28-Mar-07 A
A48140	Produce As Built Drawings	200d	03-Oct-08	28-Jul-09
A48150	Receive Final As Built Data from the Contractor	0d		30-Jun-09
A48280	Receive First As Built Data from the Contractor	0d		01-Oct-08*
A48290	Issue Final As Built Drawings	0d		28-Jul-09
A4980	General Arrangement Drawings	27d	24-Apr-06 A	05-Jun-06 A
A5750	Issue Tram Stop GA Drawings for South Gyle Access	0d		30-Jun-06 A
SDS81140	Address tie and CEC Comments, Other Revisions and IDC	24d	02-Nov-07 A	07-Dec-07 A
VO208 South Gyle Tramstop		152d	15-Aug-06 A	23-Mar-07 A
A45040	Options Report and Revision of Design to Accommodate RED issue at DAP	143d	15-Aug-06 A	23-Mar-07 A
Structures		564d	27-Feb-06 A	14-May-08
S05 Existing Broomhouse Road Bridge		322d	27-Feb-06 A	01-Jun-07 A
SDS45840	Review of Previous Work	9d	27-Feb-06 A	10-Mar-06 A
SDS45850	Optioneering	3d	01-Mar-06 A	03-Mar-06 A
SDS45860	Initial Design	4d	01-Mar-06 A	06-Mar-06 A
SDS45870	Production of AIP Drawing	2d	06-Mar-06 A	07-Mar-06 A
SDS45880	Issue AIP Drawing to tie	0d		07-Mar-06 A
SDS45890	Checking	5d	13-Mar-06 A	17-Mar-06 A
SDS45900	tie AIP Drawing Review Period	12d	08-Mar-06 A	24-Mar-06 A
SDS45910	Undertake Consultations	12d	03-Apr-06 A	21-Apr-06 A
SDS45920	Receive AIP Drawing Comments from tie	0d		24-Mar-06 A
SDS45930	Incorporate tie Comments into AIP Drawing	4d	10-Apr-06 A	13-Apr-06 A
SDS45940	Production of AIP Document	4d	24-Apr-06 A	27-Apr-06 A
SDS45950	Issue AIP Document to tie	0d		27-Apr-06 A
SDS45960	tie AIP Document Review Period	5d	28-Apr-06 A	05-May-06 A
SDS45970	Receive AIP Document Comments from tie	0d		05-May-06 A
SDS45980	Incorporate tie Comments into AIP Document	5d	08-May-06 A	12-May-06 A
SDS45990	Issue AIP Document & Drawing to TAA	0d		12-May-06 A
SDS46000	TAA AIP Document & Drawing Review Period	5d	15-May-06 A	22-May-06 A
SDS46010	Issue AIP Document & Drawing to Planning Department	0d		12-May-06 A
SDS46020	Planning Department AIP Document & Drawing Review Period	18d	15-May-06 A	09-Jun-06 A
SDS46030	Recieve AIP Document & Drawing Comments from TAA	0d		22-May-06 A
SDS46040	Incorporate TAA Comments into AIP Document & Drawing	5d	22-May-06 A	30-May-06 A
SDS46050	Recieve AIP Document & Drawing Comments from Planning Department	0d		09-Jun-06 A
SDS46060	Incorporate Planning Department TAA Comments into AIP Document & Drawing	5d	12-Jun-06 A	16-Jun-06 A
SDS46070	Issue AIP Drawing & Document to Structures Detailed Design Team	0d		03-Jul-06 A
Preliminary Design Milestones		85d	14-Aug-06 A	11-Dec-06 A
293	Receipt of tie PD Acceptance	0d	11-Dec-06 A	
294	Receipt of Alignment Prelim Design Package	0d	11-Dec-06 A	
295	Receipt of OLE Prelim Design Package	0d	11-Dec-06 A	
296	Receipt of an Approved and Signed AIP document	0d	14-Aug-06 A	
Structure Assessment		117d	11-Dec-06 A	01-Jun-07 A
298	Structure Assessment	47d	11-Dec-06 A	26-Feb-07 A

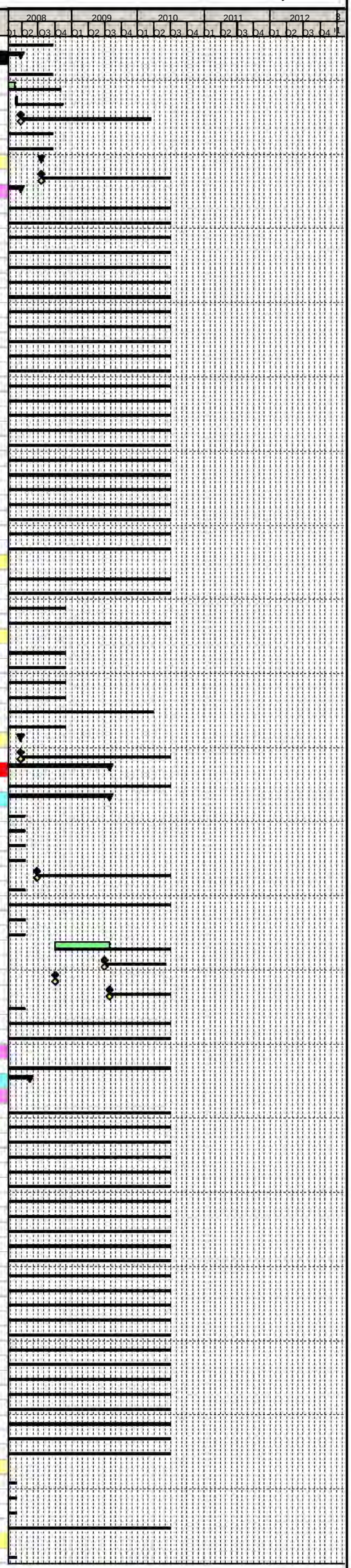

Primary Baseline
Actual Work
Remaining Work
Critical Remaining Work
Baseline Milestone
Milestone

Trams for Edinburgh
connecting our Capital

Edinburgh Tram Project

SDS FULL DESIGN PROGRAMME @ V26

tie

Activity ID	Activity Name	Original Duration	Start	Finish
299	Issue Structure Assessment Package to CAT I Checker	0d	27-Feb-07 A	
300	Structure Assessment Package CAT I Check	14d	27-Feb-07 A	19-Mar-07 A
301	Receive & Incorporate CAT I comments	9d	20-Mar-07 A	02-Apr-07 A
329	Broomhouse Road Bridge Design Complete	0d	01-Jun-07 A	
SDS62160	IDC	21d	03-Apr-07 A	04-May-07 A
S26 South Gyle Access Road Bridge (Task700.3.12)		534d	10-Apr-06 A	14-May-08
SDS53950	Collate Base Data on Alignment & Topo survey	9d	10-Apr-06 A	25-Apr-06 A
SDS53960	Define Clearances	14d	10-Apr-06 A	03-May-06 A
SDS53970	Develop Preliminary Structures Options	26d	17-Apr-06 A	26-May-06 A
SDS53980	Options Review	13d	11-May-06 A	31-May-06 A
SDS53990	Produce Draft GA (AIP) Drg Showing Preferred Option	14d	11-May-06 A	01-Jun-06 A
SDS54000	Issue S Gyle Access Bridge Draft GA (AIP) Drg to tie	0d		30-Jun-06 A
SDS54010	Select Preferred Design Option in Liaison with tie	16d	16-May-06 A	08-Jun-06 A
SDS54020	Update Base Data on Alignment & Topo Survey	4d	16-May-06 A	19-May-06 A
SDS54030	Draft AIP Document Text	16d	19-May-06 A	13-Jun-06 A
SDS54040	Update AIP GA Drgs	6d	03-Jul-06 A	10-Jul-06 A
SDS54050	Check of AIP Document	1d	16-Jun-06 A	16-Jun-06 A
SDS54060	Issue AIP Document to Technical Approval Authority (TAA) Form A	0d		11-Jul-06 A
SDS54070	Issue AIP Document to Planning Department	0d		11-Jul-06 A
SDS54080	TAA Review AIP & Comment	14d	11-Jul-06 A	31-Jul-06 A
SDS54090	Planning Department Review AIP & Comment	14d	11-Jul-06 A	31-Jul-06 A
SDS54100	Receive AIP Comments from TAA	0d		01-Aug-06 A
SDS54110	Receive AIP Comments from Planning Department	0d		01-Aug-06 A
SDS54120	Incorporate AIP Comments from TAA	24d	02-Aug-06 A	07-Sep-06 A
SDS54140	Re-issue AIP to TAA	0d		07-Sep-06 A
SDS54150	TAA Review AIP	46d	08-Sep-06 A	15-Nov-06 A
SDS54160	TAA Sign Off AIP Document	0d		16-Nov-06 A
SDS54170	Issue AIP to Structures Detailed Design Team	0d		16-Nov-06 A
South Gyle Access Road Bridge Preliminary Design Milestones		10d	24-Jul-06 A	04-Aug-06 A
SDS35980	Update Available Base Data/Info Re Alignment/Topo Survey etc	9d	24-Jul-06 A	04-Aug-06 A
South Gyle Access Road Bridge Superstructure Detailed Design		373d	07-Aug-06 A	29-Jan-08
SDS35990	Superstructure Analysis	52d	07-Aug-06 A	23-Oct-06 A
SDS36010	Superstructure Detailed Design	51d	26-Sep-06 A	08-Dec-06 A
SDS36030	Superstructure Detailed Design Draughting	205d	23-Oct-06 A	07-Sep-07 A
SDS36060	Prepare Relevant Bridgeworks Specification Clauses	89d	02-Jan-07 A	17-May-07 A
SDS36070	Issue Notification Of Completion Letter- South Gyle Access Bridge Superstructure Package to tie for Comments	0d		20-Dec-07 A
SDS36090	Issue Detailed Design Package to CAT II Checker	0d		22-Dec-06 A
SDS36100	Bridge CATII Review Period	244d	02-Jan-07 A	15-Jan-08
SDS36160	Receive and Incorporate CATII Check Comments	9d	16-Jan-08	29-Jan-08
South Gyle Access Road Bridge Substructure Detailed Design		341d	08-Sep-06 A	17-Jan-08
SDS36000	Substructure Analysis	98d	08-Sep-06 A	09-Feb-07 A
SDS36020	Substructure Detailed Design	117d	29-Sep-06 A	30-Mar-07 A
SDS36040	Substructure Detailed Design Draughting	288d	23-Oct-06 A	17-Jan-08
SDS65360	Issue Notification Of Completion Letter- South Gyle Access Bridge Substructure Package to tie for Comments	0d		17-Jan-08
SDS65370	Issue Detailed Design Package to CAT II or CAT III Checker (as appropriate)	0d		08-Jan-07 A
South Gyle Access Road Bridge Design Package For Construction / Fabrication		0d	14-May-08	14-May-08
SDS36240	Issue South Gyle Access Road Bridge Specification Clauses For Construction	0d		14-May-08
W11 Bankhead Drive Retaining Wall (Task700.3.11)		530d	11-Apr-06 A	12-May-08
SDS54180	Collate Base Data on Alignment & Topo survey	9d	11-Apr-06 A	26-Apr-06 A
SDS54190	Define Clearances	11d	17-Apr-06 A	04-May-06 A
SDS54200	Develop Preliminary Structures Options	26d	17-Apr-06 A	26-May-06 A
SDS54210	Options Review	24d	12-May-06 A	19-Jun-06 A
SDS54220	Produce Draft GA (AIP) Drg Showing Preferred Option	29d	12-May-06 A	26-Jun-06 A
SDS54230	Issue S Gyle Access RW Draft GA (AIP) Drg to tie	0d		30-Jun-06 A
SDS54240	Select Preferred Design Option in Liaison with tie	24d	19-May-06 A	26-Jun-06 A
SDS54250	Update Base Data on Alignment & Topo Survey	27d	16-May-06 A	26-Jun-06 A
SDS54260	Draft AIP Document Text	11d	09-Jun-06 A	26-Jun-06 A
SDS54270	Update AIP GA Drgs	11d	14-Jun-06 A	29-Jun-06 A
SDS54280	Check of AIP Document	2d	29-Aug-06 A	30-Aug-06 A
SDS54290	Issue AIP Document to Technical Approval Authority (TAA) Form A	0d		30-Aug-06 A
SDS54300	Issue AIP Document to Planning Department	0d		30-Jun-06 A
SDS54310	TAA Review AIP & Comment	5d	11-Jul-06 A	17-Jul-06 A
SDS54320	Planning Department Review AIP & Comment	5d	11-Jul-06 A	17-Jul-06 A
SDS54330	Receive AIP Comments from TAA	0d		30-Jun-06 A
SDS54340	Receive AIP Comments from Planning Department	0d		30-Jun-06 A
SDS54350	Incorporate AIP Comments from TAA	45d	03-Jul-06 A	07-Sep-06 A
SDS54370	Re-issue AIP to TAA	0d		07-Sep-06 A
SDS54380	TAA Review AIP	47d	07-Sep-06 A	15-Nov-06 A
SDS54390	TAA Sign Off AIP Document	0d		16-Nov-06 A
SDS54400	Issue Bankhead Drive AIP to Structures Detailed Design Team	0d		16-Nov-06 A
Bankhead Drive Retaining Wall Preliminary Design Milestones		148d	10-Jul-06 A	09-Feb-07 A
SDS57140	Update Available Base Data/Info Re Alignment/Topo Survey etc	9d	10-Jul-06 A	21-Jul-06 A
SDS57160	Retaining Wall Anaysis	134d	17-Jul-06 A	09-Feb-07 A
Bankhead Drive Retaining Wall Structure Detailed Design		384d	14-Aug-06 A	20-Feb-08
SDS57170	Retaining Wall Detailed Design	330d	14-Aug-06 A	11-Jan-08 A
SDS57180	Retaining Wall Detailed Design Draughting	303d	25-Sep-06 A	11-Jan-08 A
SDS57210	Issue Notification Of Completion Letter- Bankhead Drive Retaining Wall Package to tie for Comments	0d		18-Jan-08
SDS57230	Issue Detailed Design Package to CAT II Checker	0d		18-Dec-06 A
SDS57240	Bridge CATII Review Period	13d	18-Jan-08	06-Feb-08
SDS57300	Receive and Incorporate CATII Check Comments	9d	07-Feb-08	20-Feb-08
Bankhead Drive Retaining Wall Design Package For Construction / Fabrication		0d	12-May-08	12-May-08
SDS57380	Issue Bankhead Drive retaining Wall Specification clauses For Construction	0d		12-May-08
Tram Bankhead Drive Substation (Task700.3.13)		403d	15-May-06 A	07-Dec-07 A
A549040	Preliminary Design of Substation	21d	15-May-06 A	13-Jun-06 A
A549860	Detailed Design Civils	197d	17-Nov-06 A	21-Sep-07 A
A549870	Detailed Architecture Design	63d	15-Jan-07 A	19-Apr-07 A
A549880	IDC on Detailed Design (Inc. Systems Assurance)	10d	03-Apr-07 A	19-Apr-07 A
A549890	Issue Notification Of Completion Letter- Tram Bankhead Drive Substation Planning Submission to tie for Approval	0d		19-Apr-07 A
A550110	Substation Consultation Period	28d	19-Jun-06 A	27-Jul-06 A
A550230	Issue of Bankhead Drive Substation Design	0d		30-Jun-06 A
A550280	Compile Substation Planning Submission	8d	10-Apr-07 A	19-Apr-07 A
A550400	Investigate Options For Planners	1d	20-Oct-06 A	20-Oct-06 A
SDS81070	Address tie Comments, Other Revisions, IDC & Section Submission Package	24d	02-Nov-07 A	07-Dec-07 A
SGA - EPS		986d	19-Sep-05 A	28-Jul-09
CON-0850	Requirements Definition (Contract Dates)	62d	19-Sep-05 A	19-Dec-05 A
Tram Stop Edinburgh Park Station (Task700.3.14)		827d	28-Apr-06 A	28-Jul-09
A26940	Prepare Tram Stop Planning Submission Drawings	9d	13-Mar-07 A	26-Mar-07 A
A26950	Produce Engineering Detailed Design Drawings	23d	24-Aug-07 A	28-Sep-07 A
A26980	Issue Notification Of Completion Letter- Edinburgh Park Station Tram Stop Design to tie	0d		28-Sep-07 A
A27000	Tram Stop Design Complete - Drawings Issued for Construction	0d		24-Jun-08
A28200	Addressing PD Comments	2d	21-Sep-06 A	22-Sep-06 A
A44240	Issue Edinburgh Park Station Tram Stop Package for Prior Approval to tie	0d		26-Mar-07 A
A44250	Update Planning Submission for Issue to Planning Drawings Team	6d	01-Aug-07 A	08-Aug-07 A

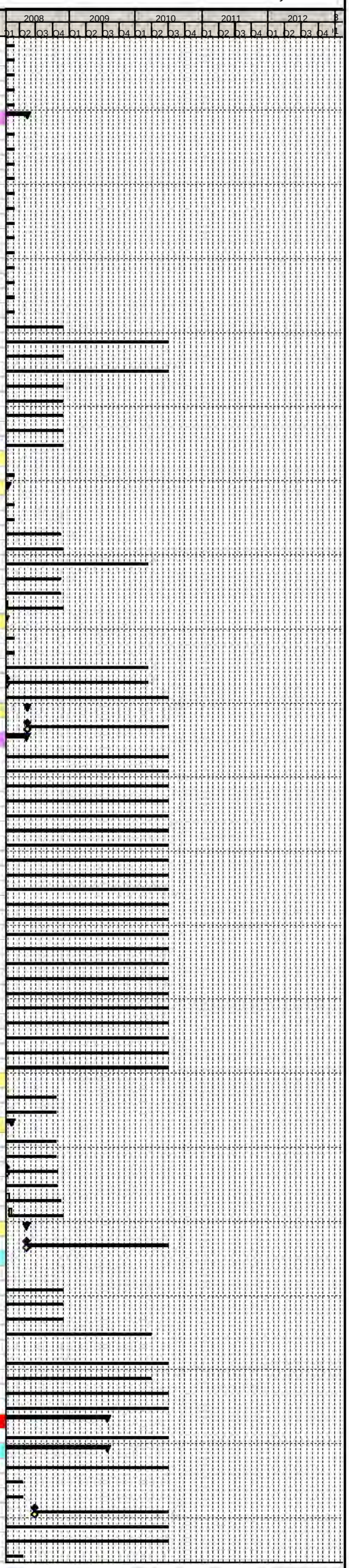

Primary Baseline
Actual Work
Remaining Work
Critical Remaining Work
Baseline Milestone
Milestone

Trams for Edinburgh
...connecting our Capital

Edinburgh Tram Project

SDS FULL DESIGN PROGRAMME @ V26

tie

Activity ID	Activity Name	Original Duration	Start	Finish
A44260	IDC Tram Stop Design for Planning Submission (Inc. Systems Asssurance)	9d	27-Feb-07 A	12-Mar-07 A
A44270	Compile Planning Drawings Tram Stop Edinburgh Park Station	11d	08-Aug-07 A	23-Aug-07 A
A44950	Prepare Detailed Design Stop Drawings	126d	14-Aug-06 A	26-Feb-07 A
A45030	Re-Design Edinburgh Park Station Stop Due To Change To RW After Submission	42d	18-Jun-07 A	17-Aug-07 A
A48300	Produce As Built Drawings	200d	03-Oct-08	28-Jul-09
A48310	Receive Final As Built Data from the Contractor	0d		30-Jun-09
A48320	Receive First As Built Data from the Contractor	0d		01-Oct-08*
A48330	Issue Final As Built Drawings	0d		28-Jul-09
A4990	General Arrangement Drawings	41d	28-Apr-06 A	30-Jun-06 A
A5760	Issue Tram Stop GA Drawings for Edinburgh Park Station	0d		30-Jun-06 A
Structures		564d	23-Jan-06 A	10-Apr-08
S27 Edinburgh Park Station Viaduct (NR Ref 070/003-2)		564d	23-Jan-06 A	10-Apr-08
SDS42960	Review of Previous Work	9d	23-Jan-06 A	03-Feb-06 A
SDS42970	Optioneering	14d	06-Feb-06 A	24-Feb-06 A
SDS42980	Initial Design	9d	27-Feb-06 A	10-Mar-06 A
SDS42990	Production of Form A Drawing	5d	06-Mar-06 A	10-Mar-06 A
SDS43000	Issue Form A Drawing to tie	0d		10-Mar-06 A
SDS43010	Checking	5d	13-Mar-06 A	17-Mar-06 A
SDS43020	tie Form A Drawing Review Period	5d	13-Mar-06 A	17-Mar-06 A
SDS43030	Undertake Consultations	19d	13-Mar-06 A	07-Apr-06 A
SDS43040	Receive Form A Drawing Comments from tie	0d		17-Mar-06 A
SDS43050	Incorporate tie Comments into Form A Drawing	26d	20-Mar-06 A	28-Apr-06 A
SDS43060	Production of Form A Document	14d	10-Apr-06 A	03-May-06 A
SDS43070	Issue Formal Form A Document to tie	0d		04-May-06 A
SDS43080	tie Form A Document Review Period	4d	04-May-06 A	09-May-06 A
SDS43090	Receive Form A Document Comments from tie	0d		09-May-06 A
SDS43100	Incorporate tie Comments into Form A Document	5d	10-May-06 A	16-May-06 A
SDS43110	Issue Form A Document & Drawing to TAA	0d		09-May-06 A
SDS43120	TAA Form A Document & Drawing Review Period	59d	17-May-06 A	14-Aug-06 A
SDS43130	Issue Form A Document & Drawing to Planning Department	0d		09-May-06 A
SDS43140	Planning Department Form A Document & Drawing Review Period	61d	15-May-06 A	14-Aug-06 A
SDS43150	Receive Form A Document & Drawing Comments from TAA	0d		14-Aug-06 A
SDS43160	Incorporate TAA Comments into Form A Document & Drawing	5d	15-Aug-06 A	21-Aug-06 A
SDS43170	Receive Form A Document & Drawing Comments from Planning Department	0d		14-Aug-06 A
SDS43180	Incorporate Planning Department TAA Comments into Form A Document & Drawing	5d	15-Aug-06 A	21-Aug-06 A
SDS43190	Issue Drawing & Form A Document to Structures Detailed Design Team	0d		21-Aug-06 A
Preliminary Design Milestones		259d	14-Aug-06 A	21-Aug-07 A
55	Receipt of tie PD Acceptance	0d	12-Feb-07 A	
56	Receipt of Alignment Prelim Design Package	0d	12-Feb-07 A	
57	Receipt of OLE Prelim Design Package	0d	21-Aug-07 A	
58	Receipt of Ground Investigation Data & Interpretative Geotechnical Report	0d	12-Feb-07 A	
59	Receipt of an Approved and Signed AIP document	0d	14-Aug-06 A	
Superstructure Detailed Design		134d	21-May-07 A	23-Nov-07 A
61	Superstructure Detailed Design	60d	21-May-07 A	17-Aug-07 A
62	Superstructure Detailed Design Draughting	66d	12-Jun-07 A	18-Sep-07 A
63	Issue Superstructure Detailed Design Package to CAT III Checker	0d	19-Sep-07 A	
64	Superstructure CAT III Check	28d	19-Sep-07 A	30-Oct-07 A
65	Receive & Incorporate CAT III comments	9d	31-Oct-07 A	13-Nov-07 A
66	Issue Notification Of Completion Letter- Edinburgh Park Station Viaduct Superstructure Design Package to tie	0d	23-Nov-07 A	
Substructure Detailed Design		123d	05-Jun-07 A	23-Nov-07 A
83	Substructure Detailed Design	51d	05-Jun-07 A	17-Aug-07 A
84	Substructure Detailed Design Draughting	66d	12-Jun-07 A	18-Sep-07 A
85	Issue Substructure Detailed Design Package to CAT III Checker	0d	19-Sep-07 A	
86	Substructure CAT III Check	19d	19-Sep-07 A	16-Oct-07 A
87	Receive & Incorporate CAT III comments	9d	17-Oct-07 A	30-Oct-07 A
88	Issue Notification Of Completion Letter- Edinburgh Park Station Viaduct Substructure Design Package to tie	0d	23-Nov-07 A	
Issue Design Package For Construction/Fabrication		0d	10-Apr-08	10-Apr-08
81	Issue Edinburgh Park Station Viaduct Design Package For Construction/Fabrication	0d	10-Apr-08	
EPS - EDP		986d	19-Sep-05 A	28-Jul-09
CON-0880	Requirements Definition (Contract Dates)	62d	19-Sep-05 A	19-Dec-05 A
Sub Station Edinburgh Park (Task700.3.16)		40d	01-Jun-06 A	27-Jul-06 A
A548970	Preliminary Design of Substation	5d	01-Jun-06 A	07-Jun-06 A
A550120	Substation Consultation Period	28d	19-Jun-06 A	27-Jul-06 A
A550240	Issue of Edinburgh Park Substation Design	0d		30-Jun-06 A
Tram Stop Edinburgh Park Central (Task700.3.17)		831d	24-Apr-06 A	28-Jul-09
A27020	Prepare Tram Stop Planning Submission Drawings For Issue to Planning Drawing Team	71d	11-Apr-07 A	27-Jul-07 A
A27030	Produce Engineering Detailed Design Drawings	9d	06-Aug-07 A	17-Aug-07 A
A27040	Compile Planning Drawings Tram Stop Edinbrugh Park Central	32d	03-Jul-07 A	17-Aug-07 A
A27060	Issue Notification Of Completion Letter- Edinburgh Park Central Tram Stop Design to tie	0d		17-Aug-07 A
A27080	Tram Stop Design Complete - Drawings Issued for Construction	0d		24-Jun-08
A27660	Site Visit with tie & CEC To Review Preliminary Design	1d	02-Jul-07 A	02-Jul-07 A
A28210	Addressing PD Comments	1d	22-Sep-06 A	22-Sep-06 A
A44320	IDC Tram Stop Design for Planning Submission (Inc. Systems Asssurance)	9d	19-Mar-07 A	02-Apr-07 A
A44960	Prepare Detailed Design Stop Drawings	5d	14-Mar-07 A	21-Mar-07 A
A48340	Produce As Built Drawings	200d	03-Oct-08	28-Jul-09
A48350	Receive Final As Built Data from the Contractor	0d		30-Jun-09
A48360	Receive First As Built Data from the Contractor	0d		01-Oct-08*
A48370	Issue Final As Built Drawings	0d		28-Jul-09
A5000	General Arrangement Drawings	27d	24-Apr-06 A	05-Jun-06 A
A5770	Issue Tram Stop GA Drawings for Edinburgh Park	0d		30-Jun-06 A
EDP - GOG - Section 5C (Task700.4)		986d	19-Sep-05 A	28-Jul-09
Sub Section Wide		599d	06-Mar-06 A	09-Jul-08
Sub Section Wide IDC		22d	28-Feb-08	28-Mar-08
A40541	Subsection Wide IDC	21d	28-Feb-08	28-Mar-08
Design Assurance Review		11d	29-Apr-08	13-May-08
SDS68040	Produce Design Assurance Statement	9d	29-Apr-08	13-May-08
Consents & Approvals		368d	01-Feb-07 A	09-Jul-08
Prior Approvals		329d	01-Feb-07 A	16-May-08
Combined Section Prior Approval		60d	22-Feb-08	16-May-08
A25840	Issue Combined Package 5C for Prior Approval to CEC	0d		22-Feb-08
A25850	Receive Combined Package 5C Comments From CEC	0d		18-Apr-08
A25870	Prior Approval Granted for Section 5C Combined Package	0d		16-May-08
A40630	CEC Approval Period - 5C Combined Package	38d	22-Feb-08	18-Apr-08
A40640	Update 5C Combined Package to CEC Comments	19d	18-Apr-08	16-May-08
Batch 5/19		146d	17-Sep-07 A	17-Apr-08
SDS76020	Batch 5/19 Formal Approval Period	38d	20-Feb-08 A	16-Apr-08
SDS76030	Issue Batch 5/19 For Approval to CEC	0d	20-Feb-08 A	
SDS76040	Receive CEC Prior Approval For Batch 5/19	0d	17-Apr-08	
SDS76070	Batch 5/19 Gyle Centre Tramstop - Collation of Planning Drawings	32d	17-Sep-07 A	01-Nov-07 A
Batch 5/20		68d	22-Nov-07 A	06-Mar-08
SDS76140	Batch 5/20 Formal Approval Period	38d	10-Jan-08 A	05-Mar-08
SDS76150	Issue Batch 5/20 For Approval to CEC	0d	10-Jan-08 A	
SDS76160	Receive CEC Prior Approval For Batch 5/20	0d	06-Mar-08	

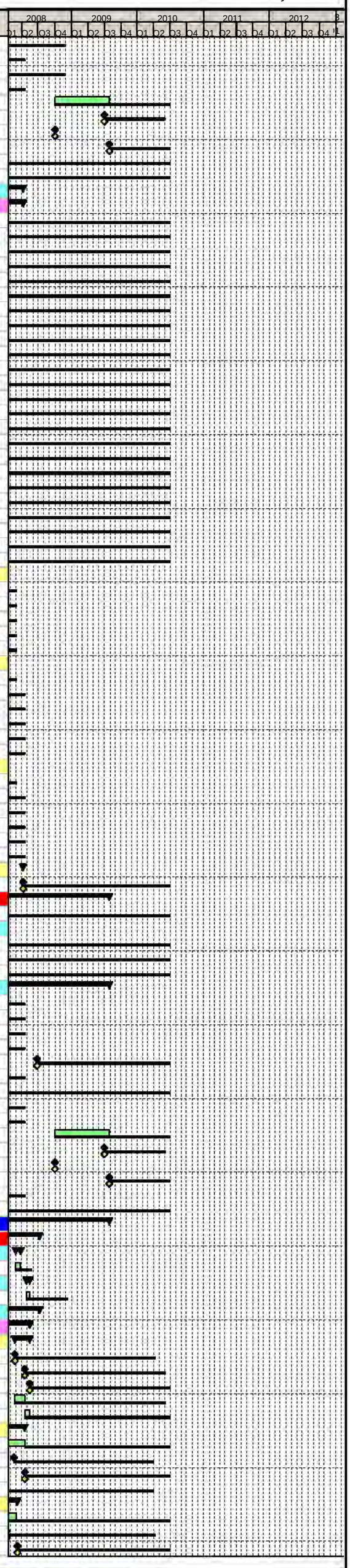

Primary Baseline
Actual Work
Remaining Work
Critical Remaining Work
Baseline Milestone
Milestone

Trams for Edinburgh
connecting our Capital

Edinburgh Tram Project

SDS FULL DESIGN PROGRAMME @ V26

tie

Activity ID	Activity Name	Original Duration	Start	Finish
SDS76190	Batch 5/20 A8 Underpass - Collation of Planning Drawings	9d	22-Nov-07 A	05-Dec-07 A
Batch 5/22		46d	21-Jan-08	25-Mar-08
SDS76200	Batch 5/22 Formal Approval Period	38d	25-Jan-08	20-Mar-08
SDS76210	Issue Batch 5/22 For Approval to CEC	0d	25-Jan-08	
SDS76220	Receive CEC Prior Approval For Batch 5/22	0d	25-Mar-08	
SDS76250	Batch 5/22 Gogarburn tramstop - Collation of Planning Drawings	4d	21-Jan-08	24-Jan-08
Roads, Track, OLE, Landscaping, Street Lighting		40d	01-Feb-07 A	28-Mar-07 A
SDS30580	Informal Consultation With CEC & tie Over Prior Approval for Roads, Track, OLE, Landscaping and Street Lighting	38d	01-Feb-07 A	28-Mar-07 A
Tram Stop Gyle Centre		40d	01-Feb-07 A	28-Mar-07 A
A40920	Informal Consultation With CEC & tie over Prior Approval Tram Stop Gyle Centre	38d	01-Feb-07 A	28-Mar-07 A
Depot Halt		40d	06-Feb-07 A	02-Apr-07 A
A40950	Informal Consultation With CEC & tie over Prior Approval Tram Stop Depot Stop	38d	06-Feb-07 A	02-Apr-07 A
Gyle Stop Retaining Walls		40d	01-Feb-07 A	28-Mar-07 A
SDS66600	Commence Gyle Stop RW Informal Consultation With CEC & tie Over Prior Approval	38d	01-Feb-07 A	28-Mar-07 A
Technical Approvals		368d	01-Feb-07 A	09-Jul-08
Gyle Stop Retaining Walls Structure Review (TAA)		298d	22-Feb-07 A	23-Apr-08
SDS66610	Issue Detailed Design Package to TAA	0d		11-Feb-08*
SDS66620	Incorporate TAA Comments	9d	10-Apr-08	23-Apr-08
SDS66630	TAA Review Period	38d	12-Feb-08	09-Apr-08
SDS66640	Receive TAA Comments	0d		09-Apr-08
SDS66650	Commence Gyle Stop RW Informal Consultation With CEC Over Technical Approval	38d	22-Feb-07 A	20-Apr-07 A
Roads Technical Approval		346d	01-Feb-07 A	09-Jun-08
SDS30590	Issue Roads Design to Roads Authority for Approval	0d		28-Mar-08
SDS30600	Roads Authority Approval Period	38d	31-Mar-08	27-May-08
SDS30610	Receive Roads Authority Comments	0d		27-May-08
SDS30620	Update to Roads Authority Comments	8d	28-May-08	09-Jun-08
SDS30630	Roads Authority Informal Consultation	38d	01-Feb-07 A	28-Mar-07 A
SDS30700	Roads Technical Approval Granted	0d		09-Jun-08
Drainage Technical Approval		342d	01-Feb-07 A	03-Jun-08
SDS72900	Roads Authority Informal Consultation For Drainage	38d	01-Feb-07 A	28-Mar-07 A
SDS72910	Issue Drainage Design to Roads Authority for Approval	0d		28-Mar-08
SDS72920	Roads Authority Approval Period For Drainage	38d	31-Mar-08	27-May-08
SDS72930	Receive Roads Authority Comments For Drainage	0d		27-May-08
SDS72940	Update to Roads Authority Comments For Drainage	5d	28-May-08	03-Jun-08
SDS72950	Drainage Technical Approval Granted	0d		03-Jun-08
A8 Underpass Superstructure Review (TAA)		94d	29-Feb-08	09-Jul-08
SDS36620	Issue Detailed Design Package to TAA	0d		28-Apr-08
SDS36650	TAA Approval Period	38d	29-Apr-08	25-Jun-08
SDS36690	Receive TAA Comments	0d		25-Jun-08
SDS36720	Incorporate TAA Comments	9d	26-Jun-08	09-Jul-08
SDS63010	Commence A8 Underpass Informal Consultation With CEC Over Technical Approval	38d	29-Feb-08	28-Apr-08
Track (Task700.4.1)		515d	11-Apr-06 A	18-Apr-08
A3760	First Pass Mx Horizontal and Vertical Alignment	19d	11-Apr-06 A	11-May-06 A
A3770	Handover Alignment Design P Way to Roads	0d		12-May-06 A
A3780	Coordination Meeting/Workshop Between PWay/Roads & Resolution of Major Conflicts	1d	12-May-06 A	12-May-06 A
SDS30300	Revise Alignment to Match Roads First Pass Vertical	6d	06-Dec-06 A	13-Dec-06 A
SDS30350	Handover Alignment Design Track to Roads	0d		13-Dec-06 A
SDS30720	Revise Alignment to Inc. Preliminary Design Comments	68d	10-Jul-06 A	18-Oct-06 A
SDS30740	Handover Alignment Design Track to Roads	0d		18-Oct-06 A
SDS57110	Issue Track Alignment Design to tie Section 5C	0d		10-Jan-07 A
SDS59610	IDC Track Design	8d	20-Dec-06 A	08-Jan-07 A
SDS61020	Revise Track Alignment to Inc. Modelling Changes	1d	09-Nov-06 A	09-Nov-06 A
SDS70200	tie Approval Period	19d	11-Jan-07 A	07-Feb-07 A
SDS70210	Receive tie Comments	0d	03-Apr-07 A	
SDS70220	Incorporate tie Comments	1d	04-May-07 A	05-May-07 A
SDS75170	Address tie Comments, Connections to Rev Depot Layout, Other Revisions, IDC & Section Submission Package	165d	06-Aug-07 A	18-Apr-08
Roads, Street Lighting & Landscaping (Task700.4.2)		530d	10-May-06 A	09-Jun-08
A3790	Route Appreciation/Junct Layout & Determine with tie & CEC Works Extent	2d	10-May-06 A	11-May-06 A
A3800	Frontage Surveys	2d	12-May-06 A	15-May-06 A
A3810	Set Up Mx Models	2d	17-May-06 A	18-May-06 A
A3820	Produce Preliminary Horizontal Road Alignment Design (Inc Lanes & Parking Zones)	7d	22-May-06 A	31-May-06 A
A3830	Preliminary Rd Junction Configuration Design	2d	01-Jun-06 A	02-Jun-06 A
A3840	Preliminary Road Safety Audit	1d	19-Jun-06 A	19-Jun-06 A
A3850	Review & Amend TRO Drawings & Schedules for Modifications Required Post Prelim Design	1d	12-Jun-06 A	12-Jun-06 A
A3860	Handover Alignment Design Roads to Pway	0d		20-Jun-06 A
A3870	Coordination Meeting/Workshop Between Roads & Pway Teams	1d	20-Jun-06 A	20-Jun-06 A
A5570	Undertake Road Marking, Pedestrian Req & Traffic Signalling Design	1d	05-Jun-06 A	05-Jun-06 A
SDS30310	Produce First Pass Vertical Alignment	7d	11-Dec-06 A	19-Dec-06 A
SDS30330	Handover Alignment Design Roads to Pway	0d		19-Dec-06 A
SDS30360	Revise Vertical Alignment to Match Final Track Alignment	5d	05-Jan-07 A	11-Jan-07 A
SDS30370	Horizontal & Vertical Alignment Design Complete	0d		11-Jan-07 A
SDS30380	Issue Roads Design to tie for Approval Section 5C	0d		23-Feb-07 A
SDS30390	Cross Check all Horizontal Design Aspects With Vertical Alignment	24d	12-Jan-07 A	16-Feb-07 A
SDS30400	tie Approval Period	19d	26-Feb-07 A	23-Mar-07 A
SDS30410	No tie Comments Received - Change in Protocol Going Forward	0d		04-May-07 A
SDS30430	Issue Construction Drawings	0d		09-Jun-08
SDS30440	Road Safety Audit Stage 2 (Intermediate)	31d	15-Jan-07 A	28-Feb-07 A
SDS30450	Insert Intermediate RSA Comments	5d	01-Mar-07 A	07-Mar-07 A
SDS30460	Produce Site Clearance Drawings & Schedule	23d	15-Jan-07 A	15-Feb-07 A
SDS30470	Produce Fencing, Barriers & Guardrails Design	3d	11-Jan-07 A	15-Jan-07 A
SDS30480	Produce Street Lighting Design (& Liaise With OLE)	4d	15-Jan-07 A	18-Jan-07 A
SDS30490	Produce Traffic Signal Only Ducting	6d	08-Jan-07 A	15-Jan-07 A
SDS30500	Produce Soft Landscaping Design	6d	07-Feb-07 A	14-Feb-07 A
SDS30510	Produce Traffic Signals Layout	18d	11-Dec-06 A	12-Jan-07 A
SDS30520	Produce Traffic Signs Design (Signs, Markings, Signals)	18d	11-Dec-06 A	12-Jan-07 A
SDS30530	Produce Earthworks Design	5d	09-Jan-07 A	15-Jan-07 A
SDS30750	Revise Alignment to Inc. Final Track Horizontal Alignment (Horizontal Design Freeze)	20d	13-Nov-06 A	11-Dec-06 A
SDS30760	Produce Kerbs, Footway & Paved Area Design	19d	11-Dec-06 A	15-Jan-07 A
SDS30770	Produce Pavement Design	4d	08-Jan-07 A	11-Jan-07 A
SDS30780	IDC (Inc. Systems Assurance)	23d	17-Jan-07 A	19-Feb-07 A
SDS56650	Issue Notification Of Completion Letter- Hard & Soft Landscaping Design to tie Section 5C	0d		30-Aug-07 A
SDS56860	Issue Street Lighting Design (Inc. Any OLE Combined Pole Design) to tie Section 5C	0d		19-Feb-07 A
SDS59390	Compile Planning Drawings	3d	21-Feb-07 A	23-Feb-07 A
SDS59830	Advise Track, Stops, Modellers Changes To Accom RSA1 & PD Comments	7d	02-Oct-06 A	10-Oct-06 A
SDS59840	Pass Guidance/Envelope To Track & Others As Necessary (Track Not advised, No Changes)	0d		23-Oct-06 A
SDS61030	Revise Horizontal to Inc. Track Horizontal Alignment, RSA1 & PD Comments	9d	19-Oct-06 A	01-Nov-06 A
SDS61040	Revise Alignment to Inc. Minor Changes From Traffic Modelling	13d	02-Nov-06 A	21-Nov-06 A
SDS67200	Street Lighting Survey Work	60d	03-Jul-06 A	29-Sep-06 A
SDS69720	Produce Hard Landscaping Design	82d	24-Apr-07 A	24-Aug-07 A
SDS80100	Final RSA	9d	06-Mar-08	19-Mar-08
SDS80110	Incorporate Final RSA Comments	5d	20-Mar-08	28-Mar-08
Drainage		256d	12-Mar-07 A	12-Mar-08
SDS71970	Hydraulic Modelling & First Pass Drainage Design	110d	12-Mar-07 A	28-Aug-07 A

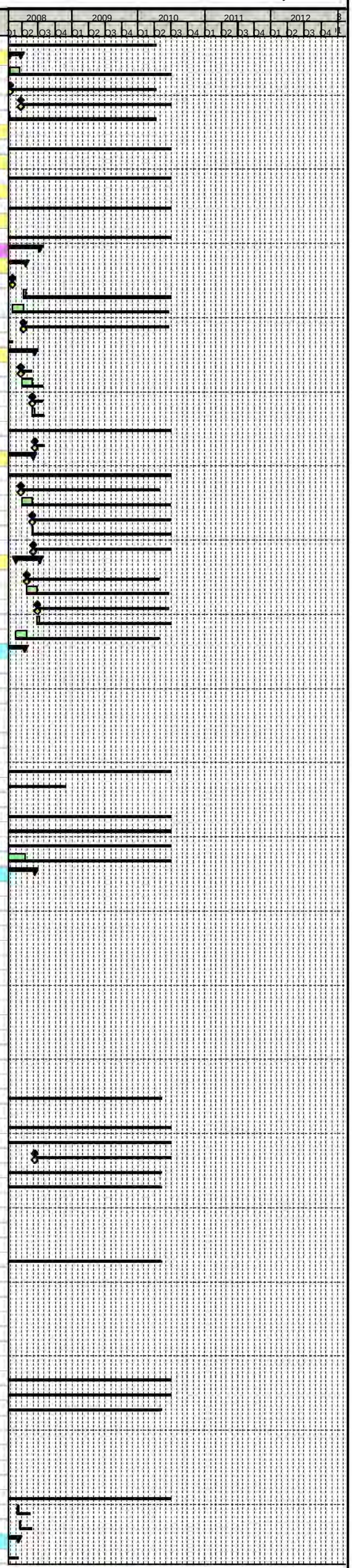

Primary Baseline
Actual Work
Remaining Work
Critical Remaining Work
Baseline Milestone
Milestone

Trams for Edinburgh
...connecting our Capital

Edinburgh Tram Project

SDS FULL DESIGN PROGRAMME @ V26

tie

Activity ID	Activity Name	Original Duration	Start	Finish
SDS71980	Receipt of Drainage Survey Information	0d		14-Jan-08*
SDS71990	Outfall Consent/Approval from SW	0d		25-Feb-08*
SDS72000	Outfall Consent/Approval from CEC	0d		14-Jan-08*
SDS72010	Outfall Consent/Approval from SEPA	0d		10-May-07 A
SDS72020	Compile Drainage Package	4d	19-Sep-07 A	24-Sep-07 A
SDS72030	Issue Drainage Design Completion Letter to tie for Approval Section 5C	0d		27-Sep-07 A
SDS73270	Final Detailed Drainage Design	53d	29-Jun-07 A	18-Sep-07 A
SDS80600	Final Detailed Drainage Design	38d	17-Dec-07 A	18-Feb-08
SDS80610	Compile Drainage Package	5d	19-Feb-08	25-Feb-08
SDS80620	Issue Drainage Design Completion Letter to tie for Approval Section 5C	0d		27-Feb-08
SDS80630	Confirm Drainage and Amend if Required	9d	28-Feb-08	12-Mar-08
Boundary & Accomodation Works (Task700.4.3)		81d	26-Mar-07 A	16-Jul-07 A
SDS42490	Detailed Design of Boundary & Accomodation Works	72d	26-Mar-07 A	16-Jul-07 A
SDS42500	Issue Notification Of Completion Letter- Detailed Design of Boundary & Accomodation Works Section 5C	0d		16-Jul-07 A
Utilities (Task700.4.4)		492d	06-Mar-06 A	11-Feb-08
A12550	Close Out PD Issues and Re-issue PD Drawings to SUCs	23d	14-Aug-06 A	15-Sep-06 A
A12560	Design Development	327d	18-Sep-06 A	11-Feb-08
A12570	Initial Consultations With SUCs and IDTs	23d	29-Aug-06 A	02-Oct-06 A
A12580	MUDFA Appointment	0d		03-Oct-06 A
A12600	IDC	9d	17-Apr-07 A	01-May-07 A
A12610	Issue DD to SUC For Approval	0d		01-May-07 A
A12620	SUC Approval Period	77d	01-May-07 A	27-Aug-07 A
A14100	Access to MUDFA and Others	124d	03-Oct-06 A	16-Apr-07 A
A14110	Consult With SUCs on DD	124d	03-Oct-06 A	16-Apr-07 A
UTIL1400	Issue to Statutory Utility Companies (SUCs)	0d		30-Jun-06 A
UTIL150	Section 5C - Pre-Preliminary Design (Utilities)	76d	06-Mar-06 A	30-Jun-06 A
TRO's		538d	05-May-06 A	16-Jun-08
SDS33770	Collate Exisiting TROs	45d	05-May-06 A	12-Jul-06 A
SDS33780	Receive Preliminary Roads Design	0d		12-Jul-06 A
SDS82110	Interim TRO Design Section 5C	5d	28-Jan-08*	01-Feb-08
SDS82120	Final TRO Design Section 5C	5d	10-Jun-08	16-Jun-08
TTRO's		138d	23-Oct-06 A	11-May-07 A
TTRO340	SDS Produce Affected Roads Listing For MUDFA Works	27d	23-Oct-06 A	30-Nov-06 A
TTRO440	SDS Produce Affected Roads Listing For INFRACO Works	36d	12-Mar-07 A	04-May-07 A
TTRO750	Issue Affected Roads Listing For MUDFA Works To Dundas & Wilson	0d		30-Nov-06 A
TTRO760	Dundas & Wilson Draft TTRO Schedule For MUDFA Works	0d	01-Dec-06 A	01-Dec-06 A
TTRO840	Issue Affected Roads Listing For INFRACO Works To Dundas & Wilson	0d		04-May-07 A
TTRO850	Dundas & Wilson Draft TTRO Schedule For INFRACO Works	5d	04-May-07 A	11-May-07 A
EDP - GYL		986d	19-Sep-05 A	28-Jul-09
CON-0910	Requirements Definition (Contract Dates)	62d	19-Sep-05 A	19-Dec-05 A
Tram Stop Gyle Centre (Task700.4.7)		816d	15-May-06 A	28-Jul-09
A27100	Prepare Tram Stop Planning Submission Drawings	8d	22-Jan-07 A	01-Feb-07 A
A27110	Produce Engineering Detailed Design Drawings	78d	20-Apr-07 A	16-Aug-07 A
A27140	Issue Notification Of Completion Letter- Gyle Centre Tram Stop Design to tie	0d		17-Aug-07 A
A27160	Tram Stop Design Complete - Drawings Issued for Construction	0d		16-May-08
A27670	Site Visit with tie & CEC To Review Preliminary Design	1d	15-Jan-07 A	15-Jan-07 A
A27940	Liaision With Structures Team Regarding RW In Advance Of DD	3d	20-Sep-06 A	22-Sep-06 A
A30270	IDC Tram Stop Engineering Detailed Design (Inc. Systems Assurance)	10d	20-Apr-07 A	04-May-07 A
A44360	Issue Gyle Tram Stop Package for Prior Approval to tie	0d		01-Feb-07 A
A44370	Update Planning Submission For Issue to Planning Drawings Team	67d	20-Mar-07 A	02-Jul-07 A
A44380	IDC Tram Stop Design for Planning Submission (Inc. Systems Asssurance)	9d	22-Jan-07 A	02-Feb-07 A
A44390	tie Approval Period	19d	01-Feb-07 A	28-Feb-07 A
A44400	Receive tie Comments	0d		16-Mar-07 A
A44410	Compile Planning Drawings Tram Stop Gyle Centre	31d	03-Jul-07 A	16-Aug-07 A
A44970	Prepare Detailed Design Stop Drawings	18d	08-Jan-07 A	01-Feb-07 A
A48420	Produce As Built Drawings	200d	03-Oct-08	28-Jul-09
A48430	Receive Final As Built Data from the Contractor	0d		30-Jun-09
A48440	Receive First As Built Data from the Contractor	0d		01-Oct-08*
A48450	Issue Final As Built Drawings	0d		28-Jul-09
A5010	General Arrangement Drawings	14d	15-May-06 A	05-Jun-06 A
A5780	Issue Tram Stop GA Drawings for Gyle	0d		30-Jun-06 A
Structures		430d	11-Aug-06 A	23-Apr-08
W19? Gyle Stop Retaining Walls (Task700.4.6)		430d	11-Aug-06 A	23-Apr-08
Gyle Stop Retaining Walls Preliminary Design Milestones		124d	11-Aug-06 A	09-Feb-07 A
SDS66400	Retaining Wall Analysis	58d	08-Nov-06 A	09-Feb-07 A
SDS66520	PD of Gyle Stop Retaining Walls Structure	106d	11-Aug-06 A	25-Jan-07 A
SDS66670	tie and TAA Sign Off PD	0d		25-Jan-07 A
Gyle Stop Retaining Walls Structure Detailed Design		229d	26-Sep-06 A	21-Aug-07 A
SDS66410	Retaining Wall Detailed Design	160d	17-Nov-06 A	27-Jul-07 A
SDS66420	Retaining Wall Detailed Design Draughting	155d	11-Dec-06 A	10-Aug-07 A
SDS66450	Issue Notification Of Completion Letter- Gyle Stop Retaining Walls Package to tie for Comments	0d		21-Aug-07 A
SDS66460	Issue Detailed Design Package to CAT II Checker	0d		10-Jan-07 A
SDS66480	Receive and Incorporate CATII Check Comments	5d	09-Aug-07 A	16-Aug-07 A
SDS66550	CAT II Review Period	9d	30-Jul-07 A	10-Aug-07 A
SDS68260	Advanced Work on Detailed Design	51d	26-Sep-06 A	08-Dec-06 A
Issue Gyle Stop Retaining Walls Design Package For Construction / Fabrication		0d	23-Apr-08	23-Apr-08
SDS66500	Issue Gyle Stop Retaining Walls Specification clauses For Construction	0d		23-Apr-08
GYL - DEH (Including A8 Underpass)		986d	19-Sep-05 A	28-Jul-09
CON-0010	Requirements Definition (Contract Dates)	62d	19-Sep-05 A	19-Dec-05 A
CON-0940	Requirements Definition (Contract Dates)	62d	19-Sep-05 A	19-Dec-05 A
Depot Halt(Task700.4.8)		648d	15-Jan-07 A	28-Jul-09
A27180	Prepare Tram Stop Planning Submission Drawings for Issue to Planning Drawings Team	19d	06-Aug-07 A	03-Sep-07 A
A27190	Produce Engineering Detailed Design Drawings	18d	24-Aug-07 A	20-Sep-07 A
A27220	Issue Notification Of Completion Letter- Depot Halt Design to tie	0d		20-Sep-07 A
A27240	Tram Stop Design Complete - Drawings Issued for Construction	0d		16-May-08
A27680	Site Visit with tie & CEC To Review Preliminary Design	1d	15-Jan-07 A	15-Jan-07 A
A44440	IDC Tram Stop Design for Planning Submission (Inc. Systems Asssurance)	9d	23-Jan-07 A	05-Feb-07 A
A44980	Prepare Detailed Design Stop Drawings	117d	06-Feb-07 A	03-Aug-07 A
A48460	Produce As Built Drawings	200d	03-Oct-08	28-Jul-09
A48470	Receive Final As Built Data from the Contractor	0d		30-Jun-09
A48480	Receive First As Built Data from the Contractor	0d		01-Oct-08*
A48490	Issue Final As Built Drawings	0d		28-Jul-09
Structures		581d	30-Mar-06 A	09-Jul-08
VO28 S28 A8 Underpass (Task700.4.9) CNS010		581d	30-Mar-06 A	09-Jul-08
SDS54410	Collate Base Data on Alignment & Topo survey	18d	30-Mar-06 A	27-Apr-06 A
SDS54420	Define Clearances	9d	13-Apr-06 A	28-Apr-06 A
SDS54430	Develop Preliminary Structures Options	36d	13-Apr-06 A	09-Jun-06 A
SDS54440	Options Review	6d	12-Jun-06 A	19-Jun-06 A
SDS54450	Produce Draft GA (AIP) Drg Showing Preferred Option	28d	09-May-06 A	20-Jun-06 A
SDS54460	Issue Draft GA A8 Underpass (AIP) Drg to tie	0d		30-Jun-06 A
SDS54470	Select Preferred Design Option in Liaison with tie	8d	13-Jun-06 A	23-Jun-06 A
SDS54480	Update Base Data on Alignment & Topo Survey	4d	16-May-06 A	19-May-06 A
SDS54490	Draft AIP Document Text	9d	13-Jun-06 A	26-Jun-06 A

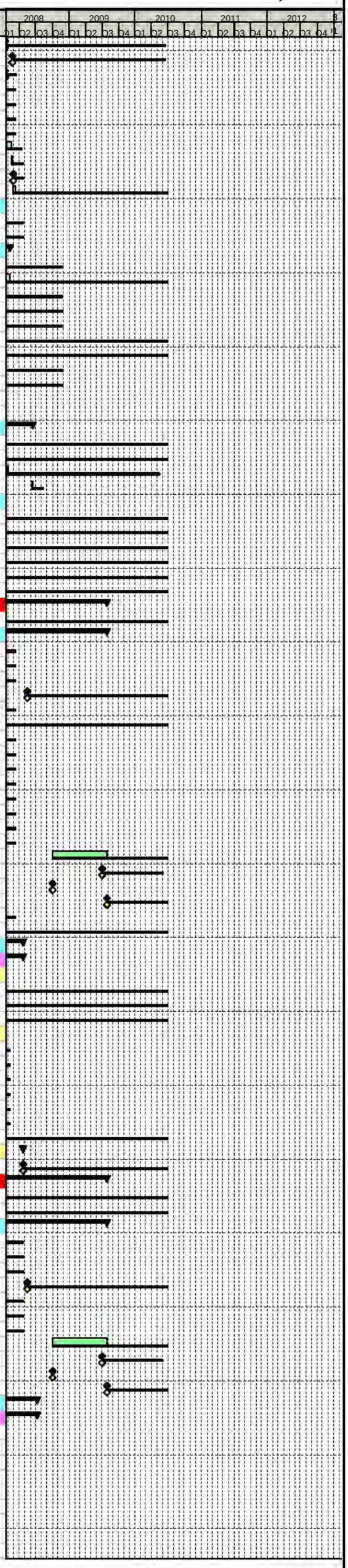

Primary Baseline
Actual Work
Remaining Work
Critical Remaining Work
Baseline Milestone
Milestone

Trams for Edinburgh
connecting our Capital

Edinburgh Tram Project

SDS FULL DESIGN PROGRAMME @ V26

tie

Activity ID	Activity Name	Original Duration	Start	Finish
SDS54500	Update AIP GA Drgs	9d	15-Jun-06 A	28-Jun-06 A
SDS54510	Check of AIP Document	2d	29-Aug-06 A	30-Aug-06 A
SDS54520	Issue AIP Document to Technical Approval Authority (TAA) Form A	0d		11-Jul-06 A
SDS54530	Issue AIP Document to Planning Department	0d		11-Jul-06 A
SDS54540	TAA Review AIP & Comment	8d	11-Jul-06 A	21-Jul-06 A
SDS54550	Planning Department Review AIP & Comment	8d	11-Jul-06 A	21-Jul-06 A
SDS54560	Receive AIP Comments from TAA	0d		24-Jul-06 A
SDS54570	Receive AIP Comments from Planning Department	0d		24-Jul-06 A
SDS54580	Incorporate AIP Comments from TAA	33d	25-Jul-06 A	12-Sep-06 A
SDS54600	Re-issue AIP to TAA	0d		14-Sep-06 A
SDS54610	TAA Review AIP	5d	15-Sep-06 A	21-Sep-06 A
SDS54620	TAA Sign Off AIP Document	0d		15-Sep-06 A
SDS54630	Issue AIP to Structures Detailed Design Team	0d		18-Sep-06 A
A8 Underpass Design Package For Construction / Fabrication		0d	09-Jul-08	09-Jul-08
SDS36780	Issue A8 Underpass Specification Clauses For Construction	0d		09-Jul-08
A8 Underpass Preliminary Design Milestones		28d	20-Oct-06 A	28-Nov-06 A
SDS36520	Update Available Base Data/Info Re Alignment/Topo Survey etc	26d	20-Oct-06 A	28-Nov-06 A
A8 Underpass Superstructure Detailed Design		362d	20-Nov-06 A	28-Apr-08
SDS36530	Superstructure Analysis	159d	20-Nov-06 A	27-Jul-07 A
SDS36550	Superstructure Detailed Design ON HOLD	276d	11-Dec-06 A	18-Feb-08
SDS36570	Superstructure Detailed Design Draughting ON HOLD	266d	02-Jan-07 A	18-Feb-08
SDS36590	Check of Drawings (IDC)	9d	15-Apr-08	28-Apr-08
SDS36610	Issue Notification Of Completion Letter- A8 Underpass Superstructure Detailed Design Package to tie for Comments	0d		28-Apr-08
SDS36630	Issue Detailed Design Package to CAT II Checker	0d	19-Feb-08*	
SDS36640	Bridge CATII Review Period	27d	19-Feb-08	01-Apr-08
SDS36700	Receive and Incorporate CATII Check Comments	9d	02-Apr-08	15-Apr-08
W10 Gyle Retaining Wall (Task700.4.11)		111d	30-Mar-06 A	31-Aug-06 A
SDS54870	Collate Base Data on Alignment & Topo survey	19d	30-Mar-06 A	28-Apr-06 A
SDS54880	Define Clearances	5d	02-May-06 A	08-May-06 A
SDS54890	Develop Preliminary Structures Options	18d	02-May-06 A	26-May-06 A
SDS54900	Options Review	8d	22-May-06 A	01-Jun-06 A
SDS54910	Produce Draft GA (AIP) Drg Showing Preferred Option	10d	22-May-06 A	06-Jun-06 A
SDS54920	Issue Gyle RW Draft GA (AIP) Drg to tie	0d		06-Jun-06 A
SDS54930	Select Preferred Design Option in Liaison with tie	3d	07-Jun-06 A	09-Jun-06 A
SDS54940	Update Base Data on Alignment & Topo Survey	2d	07-Jun-06 A	08-Jun-06 A
SDS54950	Draft AIP Document Text	5d	09-Jun-06 A	15-Jun-06 A
SDS54960	Update AIP GA Drgs	3d	14-Jun-06 A	16-Jun-06 A
SDS54970	Check of AIP Document	2d	15-Jun-06 A	16-Jun-06 A
SDS54980	Issue AIP Document to Technical Approval Authority (TAA) Form A	0d		16-Jun-06 A
SDS54990	Issue AIP Document to Planning Department	0d		16-Jun-06 A
SDS55000	TAA Review AIP & Comment	50d	19-Jun-06 A	31-Aug-06 A
W11 Glasgow Road Retaining Wall (Task700.4.12)		111d	30-Mar-06 A	31-Aug-06 A
SDS55100	Collate Base Data on Alignment & Topo survey	19d	30-Mar-06 A	28-Apr-06 A
SDS55110	Define Clearances	5d	02-May-06 A	08-May-06 A
SDS55120	Develop Preliminary Structures Options	18d	02-May-06 A	26-May-06 A
SDS55130	Options Review	5d	30-May-06 A	05-Jun-06 A
SDS55140	Produce Draft GA (AIP) Drg Showing Preferred Option	16d	12-May-06 A	06-Jun-06 A
SDS55150	Issue Glasgow RW Draft GA (AIP) Drg to tie	0d		06-Jun-06 A
SDS55160	Select Preferred Design Option in Liaison with tie	3d	07-Jun-06 A	09-Jun-06 A
SDS55170	Update Base Data on Alignment & Topo Survey	2d	07-Jun-06 A	08-Jun-06 A
SDS55180	Draft AIP Document Text	5d	09-Jun-06 A	15-Jun-06 A
SDS55190	Update AIP GA Drgs	2d	14-Jun-06 A	15-Jun-06 A
SDS55200	Check of AIP Document	2d	15-Jun-06 A	16-Jun-06 A
SDS55210	Issue AIP Document to Technical Approval Authority (TAA) Form A	0d		16-Jun-06 A
SDS55220	Issue AIP Document to Planning Department	0d		16-Jun-06 A
SDS55230	TAA Review AIP & Comment	48d	19-Jun-06 A	30-Aug-06 A
SDS55240	Planning Department Review AIP & Comment	50d	19-Jun-06 A	31-Aug-06 A
DEH - GOG		986d	19-Sep-05 A	28-Jul-09
CON-0970	Requirements Definition (Contract Dates)	62d	19-Sep-05 A	19-Dec-05 A
Tram Stop Gogarburn (Task700.4.13)		816d	15-May-06 A	28-Jul-09
A27260	Prepare Tram Stop Planning Submission Drawings for Issue to Planning Drawings Team	11d	10-Jul-07 A	25-Jul-07 A
A27270	Produce Engineering Detailed Design Drawings	10d	03-Aug-07 A	17-Aug-07 A
A27280	Compile Planning Drawings Tram Stop Gogarburn	15d	26-Jul-07 A	16-Aug-07 A
A27300	Issue Notification Of Completion Letter- Gogarburn Tram Stop Design to tie	0d		17-Aug-07 A
A27320	Tram Stop Design Complete - Drawings Issued for Construction	0d		28-Mar-08
A27690	Site Visit with tie & CEC To Review Preliminary Design (Delay Due to RBS)	1d	02-Jul-07 A	02-Jul-07 A
A44990	Prepare Detailed Design Stop Drawings	11d	22-Jun-07 A	09-Jul-07 A
A48500	Produce As Built Drawings	200d	03-Oct-08	28-Jul-09
A48510	Receive Final As Built Data from the Contractor	0d		30-Jun-09
A48520	Receive First As Built Data from the Contractor	0d		01-Oct-08*
A48530	Issue Final As Built Drawings	0d		28-Jul-09
A5020	General Arrangement Drawings	32d	15-May-06 A	30-Jun-06 A
A5790	Issue Tram Stop GA Drawings for Gogar Burn	0d		30-Jun-06 A
VO84 RBS Gogarburn Stop Design Approval		298d	09-Nov-06 A	18-Jan-08
A45110	RBS Gogarburn Stop Design Coordination	277d	09-Nov-06 A	18-Jan-08
A45120	Decision of Design with CEC, tie and RBS	0d		18-Jan-08
Structures		292d	29-Aug-06 A	19-Oct-07 A
A8 Retaining Walls (Task870.11)		292d	29-Aug-06 A	19-Oct-07 A
SDS62680	Collate Base Data on Alignment & Topo survey	8d	29-Aug-06 A	08-Sep-06 A
SDS62700	Develop Preliminary Structures Options	8d	11-Sep-06 A	21-Sep-06 A
SDS62710	Options Review	6d	22-Sep-06 A	29-Sep-06 A
A8 Retaining Wall Preliminary Design Milestones		154d	20-Oct-06 A	01-Jun-07 A
SDS51390	Update Available Base Data/Info Re Alignment/Topo Survey etc	66d	20-Oct-06 A	02-Feb-07 A
SDS62450	Retaining Wall Analysis	123d	17-Nov-06 A	01-Jun-07 A
A8 Retaining Wall Structure Detailed Design		207d	04-Jan-07 A	19-Oct-07 A
SDS62460	Retaining Wall Detailed Design NOW NOT REQUIRED	189d	04-Jan-07 A	19-Oct-07 A
SDS62470	Retaining Wall Detailed Design Draughting NOW NOT REQUIRED	145d	12-Mar-07 A	19-Oct-07 A
GDE DEPOT - Section 6 (Task870)		946d	01-Feb-06 A	15-Oct-09
GDE DEPOT - Section Wide		946d	01-Feb-06 A	15-Oct-09
DEPOT		946d	01-Feb-06 A	15-Oct-09
Sub Section Wide IDC		20d	09-Oct-08	06-Nov-08
A40551	Subsection Wide IDC - Roads, Track, Stops, B&A, Street Lighting (Excl. Dept Access Bridge)	19d	09-Oct-08	06-Nov-08
Design Assurance Review		10d	06-Nov-08	20-Nov-08
SDS68050	Produce Section Wide Design Assurance Statement	9d	06-Nov-08	20-Nov-08
Preliminary Design Approvals		265d	05-May-06 A	21-May-07 A
SDS23500	Track IDC	38d	03-Jul-06 A	25-Aug-06 A
SDS23530	Roads IDC	38d	03-Jul-06 A	25-Aug-06 A
SDS23550	Substation IDC	5d	31-May-06 A	06-Jun-06 A
SDS23800	Structures IDC	207d	03-Jul-06 A	21-May-07 A
SDS23810	PD - Submit Section 6 Structures Deliverables	0d		29-Jun-06 A
SDS23970	Informal Consultation with tie	38d	05-May-06 A	30-Jun-06 A
SDS23980	tie approval	19d	03-Jul-06 A	28-Jul-06 A
SDS34830	PD - Submit Section 6 Substation Deliverables	0d		19-Jun-06 A

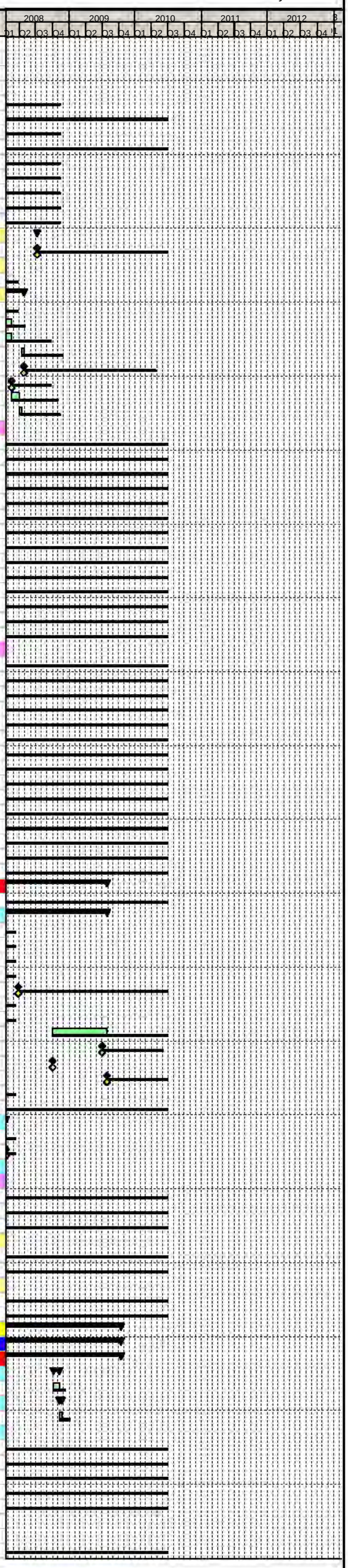

Primary Baseline
Actual Work
Remaining Work
Critical Remaining Work
Baseline Milestone
Milestone

Trams for Edinburgh
...connecting our Capital

Edinburgh Tram Project

SDS FULL DESIGN PROGRAMME @ V26

tie

Activity ID	Activity Name	Original Duration	Start	Finish
SDS34840	PD - Submit Section 6 Track Deliverables	0d		23-Jun-06 A
SDS34860	PD - Submit Section 6 Roads Deliverables	0d		30-Jun-06 A
SDS34880	PD - Section 6 Complete - Issue to tie	0d		30-Jun-06 A
Section Approvals		505d	13-Feb-07 A	09-Feb-09
Planning Conditions		377d	13-Feb-07 A	04-Aug-08
Combined Section Prior Approval		40d	09-Jun-08	04-Aug-08
A25930	Issue Combined Package 6 for Prior Approval to CEC	0d		09-Jun-08
A25960	Prior Approval Granted for Section 6 Combined Package	0d		04-Aug-08
A40690	CEC Approval Period - 6 Combined Package	38d	09-Jun-08	04-Aug-08
Batch 6/21		144d	14-Jan-08	01-Aug-08
SDS76260	Batch 6/21 Formal Approval Period	38d	06-Jun-08	31-Jul-08
SDS76270	Issue Batch 6/21 For Approval to CEC	0d	06-Jun-08	
SDS76280	Receive CEC Prior Approval For Batch 6/21	0d	01-Aug-08	
SDS76310	Batch 6/21 Depot - Collation of Planning Drawings (Excl Depot Access Bridge)	11d	20-May-08	05-Jun-08
SDS76350	Informal Consultation With CEC & tie Over Prior Approval of Depot	38d	14-Jan-08*	07-Mar-08
Batch 6/22		51d	23-May-08	04-Aug-08
SDS80160	Batch 6/22 Formal Approval Period	38d	09-Jun-08	01-Aug-08
SDS80170	Issue Batch 6/22 For Approval to CEC	0d	09-Jun-08	
SDS80180	Receive CEC Prior Approval For Batch 6/22	0d	04-Aug-08	
SDS80190	Batch 6/22 Depot - Collation of Planning Drawings (Depot Access Bridge Only)	9d	23-May-08	06-Jun-08
Tram Gogar Depot Substation		258d	27-Jul-07 A	01-Aug-08
SDS32660	Prior Approval For Tram Gogar Depot Substation	0d		01-Aug-08
SDS32670	Informal Consultation With CEC & tie Over Prior Approval Tram Gogar Depot Substation	38d	27-Jul-07 A	21-Sep-07 A
Roads, Track, OLE, Landscaping, Street Lighting		42d	13-Feb-07 A	11-Apr-07 A
SDS32450	Informal Consultation With CEC & tie Over Prior Approval for Roads, Track, OLE, Landscaping and Street Lighting	38d	13-Feb-07 A	11-Apr-07 A
Depot Buildings		41d	16-Jul-07 A	10-Sep-07 A
SDS32730	Informal Consultation With CEC & tie Over Prior Approval Depot Buildings	38d	16-Jul-07 A	10-Sep-07 A
Depot Drainage		88d	14-Jan-08	14-May-08
SDS32920	Issue Drainage Design To CEC For Prior Approval	0d		07-Mar-08
SDS32930	Depot Drainage Design CEC Approval Period	38d	10-Mar-08	07-May-08
SDS32940	Receive Depot Drainage Design CEC Comments	0d		07-May-08
SDS32950	Incorporate CEC Comments into Depot Drainage Design	5d	08-May-08	14-May-08
SDS32960	Informal Consultation With CEC & tie Over Prior Approval For Drainage	38d	14-Jan-08	07-Mar-08
SDS32970	Drainage Prior Approval	0d		14-May-08
Structure Prior Approvals		40d	14-Jan-08	07-Mar-08
Depot Access Road Bridge Superstructure		40d	14-Jan-08	07-Mar-08
SDS65970	Commence Depot Access Road Bridge Informal Consultation With CEC & tie Over Prior Approval	38d	14-Jan-08	07-Mar-08
British Airport Authority (BAA) Approval		80d	11-Sep-08	12-Jan-09
SDS32740	Issue to BAA for Approval	0d		06-Nov-08
SDS32750	BAA Approval Period	38d	06-Nov-08	12-Jan-09
SDS32780	BAA Informal Consultation	38d	11-Sep-08	06-Nov-08
SDS32790	BAA Approval	0d		12-Jan-09
Building Regulations Approval		47d	08-Feb-08	15-Apr-08
SDS32570	Submit Package for Building Regulations Approval	0d		08-Feb-08
SDS32580	Building Regulations Approval Period	38d	11-Feb-08	08-Apr-08
SDS32590	Incorporate Comments for Building Regulations Approval	0d		08-Apr-08
SDS32600	Update to Building Regulations Approval Comments	5d	09-Apr-08	15-Apr-08
SDS32610	Receive Stage 1 Building Reg Approval	0d		15-Apr-08
Technical Approvals		351d	17-Sep-07 A	09-Feb-09
Roads Technical Approval		100d	11-Sep-08	09-Feb-09
SDS32510	Roads Authority Informal Consultation	38d	11-Sep-08	06-Nov-08
SDS32520	Issue Roads Design to Roads Authority for Approval	0d		06-Nov-08
SDS32530	Roads Authority Approval Period	38d	06-Nov-08	12-Jan-09
SDS32540	Receive Roads Authority Comments	0d		12-Jan-09
SDS32550	Update to Roads Authority Comments	19d	12-Jan-09	09-Feb-09
SDS32560	Discharge of Roads Technical Approval	0d		09-Feb-09
Drainage Technical Approval		85d	11-Sep-08	19-Jan-09
SDS72960	Roads Authority Informal Consultation For Drainage	38d	11-Sep-08	06-Nov-08
SDS72970	Issue Drainage Design to Roads Authoriy for Approval	0d		06-Nov-08
SDS72980	Roads Authority Approval Period For Drainage	38d	06-Nov-08	12-Jan-09
SDS72990	Receive Roads Authority Comments For Drainage	0d		12-Jan-09
SDS73000	Update to Roads Authority Comments For Drainage	5d	12-Jan-09	19-Jan-09
SDS73010	Drainage Technical Approval Granted	0d		19-Jan-09
Depot Access Road Bridge Review (TAA)		223d	17-Sep-07 A	01-Aug-08
SDS57500	Issue Detailed Design Package to TAA	0d		22-May-08
SDS57530	TAA Approval Period	38d	23-May-08	18-Jul-08
SDS57570	Receive TAA Comments	0d		18-Jul-08
SDS57600	Incorporate TAA Comments	9d	21-Jul-08	01-Aug-08
SDS63020	Commence Depot Access Road Bridge Informal Consultation With CEC Over Technical Approval	74d	17-Sep-07 A	14-Jan-08
Depot Layout		75d	01-Feb-06 A	16-May-06 A
A52070	Develop Preliminary Design for Depot Arrangement	13d	01-Feb-06 A	20-Feb-06 A
A52410	Agree Design Concept with tie	44d	08-Feb-06 A	13-Apr-06 A
A52420	Issue Depot General Arrangement to tie	0d		13-Apr-06 A
A52430	tie Approval Period	19d	18-Apr-06 A	16-May-06 A
A53010	Receive Depot General Arrangement Approval	0d		16-May-06 A
Depot General (Task870.10)		321d	01-Feb-06 A	04-May-07 A
SDS19070	Depot Start Date	0d	01-Feb-06 A	
SDS20590	Depot Workshop	0d		20-Mar-06 A
SDS20600	Finalisation of Depot Layout General Arrangement Plans	18d	10-Apr-07 A	04-May-07 A
Stakeholder Reviews		232d	24-Jul-06 A	21-Jun-07 A
A569710	Review Potential Issues with tie & Determine Consultation Strategy	5d	24-Jul-06 A	28-Jul-06 A
A569830	Review Potential Issues with tie & Determine Consultation Strategy	22d	11-Apr-07 A	14-May-07 A
A569840	Feedback to Design Teams for Study	25d	15-May-07 A	21-Jun-07 A
SDS23570	Stakeholder Review	22d	11-Apr-07 A	14-May-07 A
Track (Task870.2)		286d	19-Jun-06 A	01-Aug-07 A
A3890	First Pass Mx Horizontal and Vertical Alignment	5d	19-Jun-06 A	23-Jun-06 A
A3900	Handover Alignment Design P Way to Roads	0d		26-Jun-06 A
A3910	Coordination Meeting/Workshop Between PWay/Roads & Resolution of Major Conflicts	1d	26-Jun-06 A	26-Jun-06 A
A4010	Produce Final Depot Layout Plans	22d	02-Jul-07 A	01-Aug-07 A
A4190	Design Alignment	228d	11-Aug-06 A	01-Aug-07 A
SDS57120	Issue Notification Of Completion Letter- Track Alignment Design to tie Section 6	0d		01-Aug-07 A
Roads, Street Lighting & Landscaping (Task870.3)		922d	07-Mar-06 A	15-Oct-09
A3920	Route Appreciation/Junct Layout & Determine with tie & CEC Works Extent	46d	09-Mar-06 A	19-May-06 A
A3930	Frontage Surveys	30d	07-Mar-06 A	21-Apr-06 A
A3940	Set Up Mx Models	3d	31-May-06 A	02-Jun-06 A
A3950	Produce Preliminary Horizontal Road Alignment Design (Inc Lanes & Parking Zones)	7d	05-Jun-06 A	13-Jun-06 A
A3960	Preliminary Rd Junction Configuration Design	2d	14-Jun-06 A	15-Jun-06 A
A3970	Preliminary Road Safety Audit	1d	26-Jun-06 A	26-Jun-06 A
A3980	Review & Amend TRO Drawings & Schedules for Modifications Required Post Prelim Design	1d	16-Jun-06 A	16-Jun-06 A
A3990	Handover Alignment Design Roads to Pway	0d		30-Jun-06 A
A4000	Coordination Meeting/Workshop Between Roads & Pway Teams	1d	30-Jun-06 A	30-Jun-06 A
A48090	Receive First As Built Data from Contractor	0d		27-Jul-09*
A48100	Produce As Built Drawings	54d	28-Jul-09	15-Oct-09

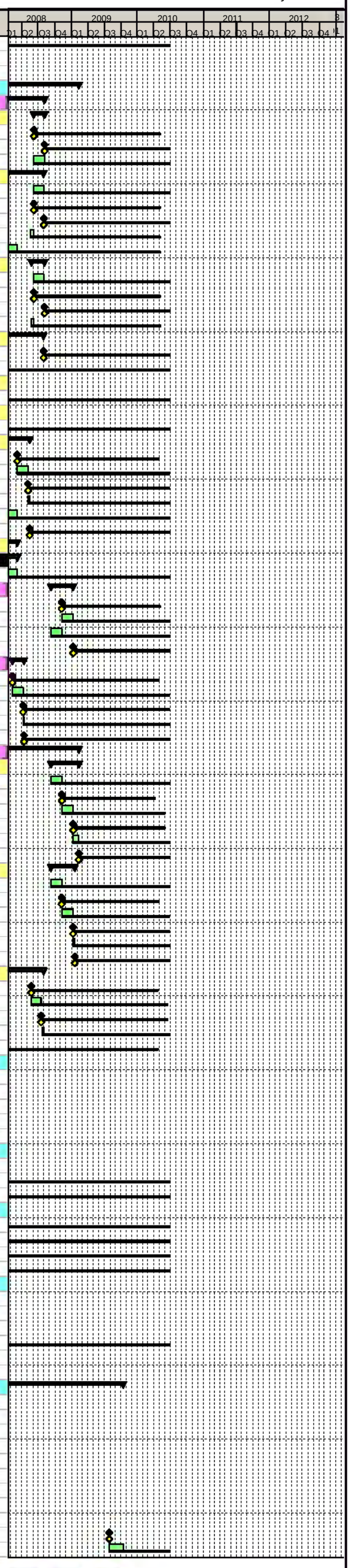

Primary Baseline
Actual Work
Remaining Work
Critical Remaining Work
Baseline Milestone
Milestone

Trams for Edinburgh ...connecting our Capital

Edinburgh Tram Project

SDS FULL DESIGN PROGRAMME @ V26

tie

Activity ID	Activity Name	Original Duration	Start	Finish
A48110	Receive Final As Built Data from Contractor	0d		17-Sep-09
A48120	Issue Final As Built Drawings	0d		15-Oct-09
A5580	Undertake Road Marking, Pedestrian Req & Traffic Signalling Design	10d	16-Jun-06 A	30-Jun-06 A
SDS32230	Produce Fencing, Barriers & Guardrails Design	6d	08-Mar-07 A	15-Mar-07 A
SDS32240	Produce Street Lighting Design (& Liaise With OLE)	33d	29-Aug-06 A	16-Oct-06 A
SDS32250	Produce Soft Landscaping Design	14d	16-Mar-07 A	10-Apr-07 A
SDS32260	Produce Traffic Signals Layout	12d	27-Feb-07 A	15-Mar-07 A
SDS32270	Produce Traffic Signs Design (Signs, Markings, Signals)	10d	01-Mar-07 A	15-Mar-07 A
SDS32280	Produce Kerbs, Footway & Paved Area Design	5d	09-Mar-07 A	15-Mar-07 A
SDS32330	Produce Traffic Signal Only Ducting	7d	19-Feb-07 A	28-Feb-07 A
SDS32340	Produce Earthworks Design	92d	04-May-07 A	21-Sep-07 A
SDS32350	Produce Pavement Design	56d	08-May-07 A	31-Jul-07 A
SDS32380	Road Safety Audit Stage 2 (Intermediate)	9d	07-Mar-07 A	20-Mar-07 A
SDS32390	Insert Intermediate RSA Comments	5d	21-Mar-07 A	28-Mar-07 A
SDS32400	Issue Notification Of Completion Letter- Roads Design to tie for Approval Section 6	0d		11-Apr-07 A
SDS56690	Issue Notification Of Completion Letter- Hard & Soft Landscaping Design to tie Section 6	109d	10-Apr-07 A	21-Sep-07 A
SDS56870	Issue Notification Of Completion Letter- Street Lighting Design (Inc. Any OLE Combined Pole Design) to tie Section 6	0d		24-Aug-07 A
SDS59400	Compile Planning Drawings	9d	27-Mar-07 A	11-Apr-07 A
SDS69730	Produce Hard Landscaping Design	109d	10-Apr-07 A	21-Sep-07 A
Drainage		243d	12-Mar-07 A	25-Feb-08
SDS72070	Hydraulic Modelling & First Pass Drainage Design	130d	12-Mar-07 A	27-Sep-07 A
SDS72080	Receipt of Drainage Survey Information	0d		11-Feb-08*
SDS72090	Outfall Consent/Approval from SW NOT REQUIRED	0d		22-Oct-07 A
SDS72100	Outfall Consent/Approval from CEC	0d		14-Jan-08*
SDS72110	Outfall Consent/Approval from SEPA	0d		10-May-07 A
SDS72120	Compile Drainage Package	5d	20-Sep-07 A	27-Sep-07 A
SDS72130	Issue Drainage Design Completion Letter to tie for Approval Section 6	0d		27-Sep-07 A
SDS73280	Final Detailed Drainage Design	23d	24-Aug-07 A	27-Sep-07 A
SDS80730	Re-Issue Drainage Design Completion Letter to tie for Approval Section 6 NOT REQUIRED - PART OF GENERAL DEPOT R...	0d		22-Oct-07 A
SDS80740	Confirm Drainage and amend if necessary	9d	11-Feb-08	25-Feb-08
Boundary & Accomodation Works (Task870.4)		91d	16-Apr-07 A	20-Aug-07 A
SDS42550	Detailed Design of Boundary & Accomodation Works	73d	16-Apr-07 A	03-Aug-07 A
SDS42560	Issue Notification Of Completion Letter- Detailed Design of Boundary & Accomodation Works Section 6	0d		20-Aug-07 A
TRO's		8d	03-Jul-06 A	12-Jul-06 A
SDS34030	Collate Exisiting TROs	8d	03-Jul-06 A	12-Jul-06 A
SDS34040	Receive Preliminary Roads Design	0d		12-Jul-06 A
Earthworks		313d	30-Jun-06 A	21-Sep-07 A
A51840	Produce Preliminary Earthworks Design	1d	30-Jun-06 A	30-Jun-06 A
A52140	Produce Detailed Earthworks Design	38d	19-Jul-07 A	13-Sep-07 A
A52730	Issue Depot Preliminary Earthworks Design	0d	30-Jun-06 A	
A52740	Issue Notification Of Completion Letter- Detailed Depot Earthworks Design	0d	21-Sep-07 A	
Depot Ductwork -External Services		401d	16-Apr-07 A	06-Nov-08
A45760	Ductwork Design	69d	16-Apr-07 A	30-Jul-07 A
A45790	Issue Notification Of Completion Letter- Depot Ductwork Design to tie	0d		21-Sep-07 A
A45810	Issue Ductwork Design to Contractor for Construction	0d		06-Nov-08
Depot Drainage Design (Task870.8)		476d	24-Apr-06 A	07-Mar-08
A51850	Produce Preliminary Design for DeWatering of Depot Site	38d	02-May-06 A	27-Jun-06 A
A52050	Produce Detailed Design for DeWatering of Depot Site	46d	19-Nov-07 A	01-Feb-08
A52970	Produce Overall Drainage Design for Depot Site	5d	24-Apr-06 A	28-Apr-06 A
A52980	Produce Drainage Interceptor Design	5d	02-May-06 A	08-May-06 A
A52990	Produce Overall Drainage Design for Depot Site	86d	12-Sep-07 A	25-Jan-08
A53000	Produce Drainage Interceptor Design	37d	26-Nov-07 A	28-Jan-08
A53020	Pumping Station Civil Engineering Design	28d	28-Jan-08	07-Mar-08
A53060	Electrical Supplies to Depot Drainage	9d	28-Jan-08	08-Feb-08
Systems & Comms		393d	13-Mar-06 A	21-Sep-07 A
A52040	Produce Preliminary Telecomms Performance Specification	71d	13-Mar-06 A	30-Jun-06 A
A52060	Issue Preliminary Telecomms Performance Specification	0d		30-Jun-06 A
SDS32980	CCTV Detailed Design	196d	20-Nov-06 A	21-Sep-07 A
Utilities (Task870.1)		467d	27-Mar-06 A	28-Jan-08
A12680	Close Out PD Issues and Re-issue PD Drawings to SUCs	26d	04-Aug-06 A	14-Sep-06 A
A12690	Design Development	331d	29-Aug-06 A	28-Jan-08
A12700	Initial Consultations With SUCs and IDTs	38d	29-Aug-06 A	23-Oct-06 A
A12710	MUDFA Appointment	0d		03-Oct-06 A
A12730	IDC	9d	18-Dec-06 A	08-Jan-07 A
A12740	Issue DD to SUC For Approval	0d		08-Jan-07 A
A12750	SUC Approval Period	150d	09-Jan-07 A	24-Aug-07 A
A14120	Access to MUDFA and Others	59d	04-Oct-06 A	08-Jan-07 A
A14130	Consult With SUCs on DD	59d	04-Oct-06 A	08-Jan-07 A
UTIL1500	Issue to Statutory Utility Companies (SUCs)	0d		21-Jun-06 A
UTIL160	Section 6 - Pre-Preliminary Design (Utilities)	55d	27-Mar-06 A	21-Jun-06 A
Depot Main Building (Task870.1)		653d	18-Apr-06 A	06-Nov-08
General (Task870.1.1)		653d	18-Apr-06 A	06-Nov-08
A28980	Review Utilities Supply (Gas, Electricity, Water)	79d	30-Jan-07 A	31-May-07 A
A28990	Develop External Services Connection Routes for Gas, Electricity & Water	99d	10-Apr-07 A	07-Sep-07 A
A29010	Review Operational Issues	137d	09-Feb-07 A	07-Sep-07 A
A29020	Develop Utilities-Supply, Routes	5d	20-Nov-06 A	24-Nov-06 A
A29030	Confirm External Service Connections	19d	20-Nov-06 A	15-Dec-06 A
A29050	Produce Plant Installation Layouts (Inc all Builders Wk Details-Foundations, Services, Loadings etc) from Contractor	28d	23-Oct-06 A	01-Dec-06 A
A29070	Architectural Layouts (1st Iteration)	96d	03-Jul-06 A	22-Nov-06 A
A29080	Architectural Detailed Design	211d	26-Oct-06 A	20-Sep-07 A
A29090	Architectural Layouts (2nd Iteration)	8d	10-Sep-07 A	20-Sep-07 A
A29120	Issue Notification Of Completion Letter- Depot Building Architectural Layout Package to tie	0d		21-Sep-07 A
A29140	Issue IFC Drawings For Depot Building	0d		06-Nov-08
A29240	Re Working Design For Infraco Tender	19d	25-Sep-06 A	20-Oct-06 A
A31710	Prepare Package for Building Reg Approval	80d	08-Oct-07 A	08-Feb-08
A51910	Produce Preliminary Floor Plans	27d	18-Apr-06 A	30-May-06 A
A51920	Produce General Arrangement Location Plans	27d	18-Apr-06 A	30-May-06 A
A52090	Establish Existing Utilities Supply & External Services Connections	23d	24-Apr-06 A	30-May-06 A
A52100	Develop Superstructure Configuration, Bay Sizes etc	27d	18-Apr-06 A	30-May-06 A
A52110	Review Operational Issues	14d	18-Apr-06 A	09-May-06 A
A52130	Establish Detailed Site Plan	13d	10-May-06 A	30-May-06 A
A52540	Issue Depot Main Building Preliminary Floor Plans	0d		30-Jun-06 A
A52550	Produce Depot & Office Building Elevations	10d	15-May-06 A	30-May-06 A
A52560	Produce Architectural Specification for Depot & Office Building	13d	10-May-06 A	30-May-06 A
A52750	Issue Architectural Specification for Depot & Office Building	0d	30-Jun-06 A	
A52760	Issue Depot & Office Building Elevations to tie	0d	30-Jun-06 A	
A53050	Second Iteration of Architetural Specification	147d	25-Jan-07 A	07-Sep-07 A
Building Foundations (Task870.1.2)		351d	10-May-06 A	21-Sep-07 A
A28771	Foundations Concrete Spec	147d	01-Feb-07 A	14-Sep-07 A
A28780	Foundations RC Design	147d	01-Feb-07 A	14-Sep-07 A
A28790	Foundations Drawings	149d	24-Nov-06 A	18-Jul-07 A
A29110	Issue Notification Of Completion Letter- Depot Detailed Substructure Drawings & Specifications to tie	0d		21-Sep-07 A
A5210	Foundations Layout & Calculations	66d	10-Apr-07 A	18-Jul-07 A

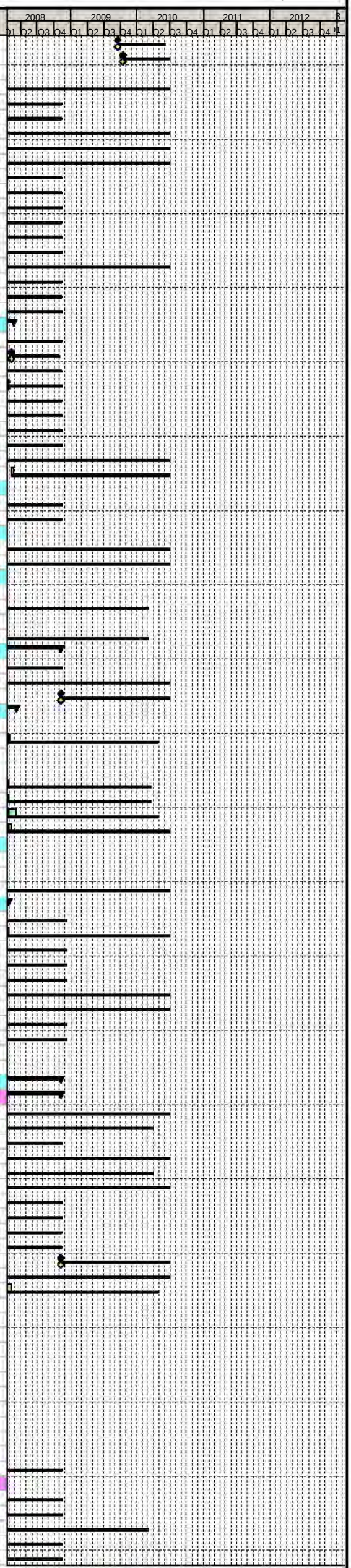

Primary Baseline
Actual Work
Remaining Work
Critical Remaining Work
Baseline Milestone
Milestone

Trams for Edinburgh
...connecting our Capital

Edinburgh Tram Project

SDS FULL DESIGN PROGRAMME @ V26

tie

Activity ID	Activity Name	Original Duration	Start	Finish
A52400	Prepare Preliminary Building Foundations Design	13d	10-May-06 A	30-May-06 A
A52670	Issue Preliminary Building Foundations Design	0d		30-Jun-06 A
Ground Floor Slab & Pits (Task870.1.3)		629d	15-May-06 A	29-Oct-08
A28830	Ground Floor Slab & Pits Layout & Calculations	184d	20-Nov-06 A	04-Sep-07 A
A28831	Ground Floor Slab & Pits Concrete Spec	8d	05-Sep-07 A	14-Sep-07 A
A28840	Ground Floor Slab & Pits RC Design	8d	10-Sep-07 A	19-Sep-07 A
A28850	Ground Floor Slab & Pits Drawings	153d	29-Jan-07 A	19-Sep-07 A
A29150	Issue Notification Of Completion Letter- Depot Ground Flr Slab to tie	0d		21-Sep-07 A
A30360	Drawings & Reinforcement Schedule (Ground Flr Slab & Pits)	0d		24-Sep-07 A
A48220	Issue Final As Built Drawings	0d		29-Oct-08
A48230	Receive As Built Information from Contractor	0d		01-Oct-08*
A48240	Produce Civil/Structural As Built Drawings & Manuals	19d	02-Oct-08	29-Oct-08
A52170	Prepare Preliminary Ground Floor Slab & Pit Design	10d	15-May-06 A	30-May-06 A
A52180	Prepare Preliminary Ground Floor & Pits Concrete Specification	9d	31-May-06 A	13-Jun-06 A
A52680	Issue Preliminary Ground Floor Slab & Pit Design	0d		30-Jun-06 A
A52690	Issue Preliminary Ground Floor & Pits Concrete Specification to tie	0d		30-Jun-06 A
Steel Superstructure (Task870.1.4)		352d	10-May-06 A	24-Sep-07 A
A52190	Prepare Preliminary Steel Superstructure Layout	23d	10-May-06 A	13-Jun-06 A
A5220	Steel Superstructure Layout & Calculations	193d	20-Nov-06 A	18-Sep-07 A
A52200	Prepare General Arrangement Drawings Superstructure Main Steelwork	21d	15-May-06 A	14-Jun-06 A
A5230	General Arrangement Drawings Superstructure Main Steelwork	191d	20-Nov-06 A	14-Sep-07 A
A52770	Issue General Arrangement Drawings Superstructure Main Steelwork	0d	30-Jun-06 A	
A5280	Issue Notification Of Completion Letter- Depot Detailed Superstructure Drawings and Specifications	0d		21-Sep-07 A
A5330	Sign Off Drawings for Construction Superstructure	1d	24-Sep-07 A	24-Sep-07 A
Mechanical (Task870.1.5)		648d	18-Apr-06 A	29-Oct-08
A28860	Calcs/Layouts/Schematics-Heating/Comp Air/Vent/Cooling	280d	21-Jul-06 A	28-Sep-07 A
A28870	Plant Schedules	219d	23-Oct-06 A	28-Sep-07 A
A28890	Calcs/Layouts/Schematics (Plant)	23d	23-Oct-06 A	24-Nov-06 A
A32180	Produce Mechanical Detailed Design Inc Comprehensive Drawings	164d	22-Jan-07 A	28-Sep-07 A
A45680	Receive Mechanical As Built Information from Contractor	0d		01-Oct-08*
A45690	Produce Mechanical As Built Drawings & Manuals	19d	02-Oct-08	29-Oct-08
A48180	Issue Final As Built Drawings	0d		29-Oct-08
A52230	Produce Plant Schedules	27d	18-Apr-06 A	30-May-06 A
A52240	Produce Plant Specifications	23d	17-May-06 A	20-Jun-06 A
A52520	Issue Plant Specifications	0d	30-Jun-06 A	
A52530	Issue Plant Schedules	0d	30-Jun-06 A	
A52570	Produce Ventilation Preliminary Design	8d	17-May-06 A	30-May-06 A
A52580	Produce Workshop Services Preliminary Design	8d	17-May-06 A	30-May-06 A
A52590	Produce Plant Room Layout Preliminary Design	8d	17-May-06 A	30-May-06 A
Electrical (Task870.1.6)		648d	18-Apr-06 A	29-Oct-08
A28920	Calcs/Layouts/Schematics-Fire/Data/Comms/Power/Mains Dist/Lighting	95d	11-Jul-06 A	29-Nov-06 A
A28930	Schedules	27d	23-Oct-06 A	30-Nov-06 A
A28940	Specifications	28d	23-Oct-06 A	01-Dec-06 A
A28950	Calcs/Layouts/Schematics (Plant)	219d	23-Oct-06 A	28-Sep-07 A
A48190	Issue Final As Built Drawings	0d		29-Oct-08
A48200	Receive As Built Information from Contractor	0d		01-Oct-08*
A48210	Produce Electrical As Built Drawings & Manuals	19d	02-Oct-08	29-Oct-08
A52250	Prepare Electrical Specifications	27d	18-Apr-06 A	30-May-06 A
A52260	Prepare Electrical Schedules	27d	18-Apr-06 A	30-May-06 A
A52270	Prepare Calcs/Layouts/Schematics (Plant) Drawings & Report	5d	12-Jun-06 A	16-Jun-06 A
A52600	Produce Preliminary Design for LV Power & Data Layouts	16d	17-May-06 A	09-Jun-06 A
A52610	Produce Preliminary Design for Lighting Layouts	16d	17-May-06 A	09-Jun-06 A
A52620	Produce Outline Design for Fire alarm Systems	16d	17-May-06 A	09-Jun-06 A
A52700	Issue Electrical Specifications	0d		30-Jun-06 A
A52710	Issue Depot Electrical Schedules	0d	30-Jun-06 A	
A52720	Issue Drawings & Report for Electrical Design Depot	0d		30-Jun-06 A
Ad Depot Public Health		38d	10-May-06 A	30-Jun-06 A
A52630	Produce Site Drainage Preliminary Design	25d	10-May-06 A	16-Jun-06 A
A52640	Produce Internal Plumbing Preliminary Design	35d	10-May-06 A	30-Jun-06 A
A52780	Issue Site Drainage Preliminary Design	0d	30-Jun-06 A	
A52790	Issue Internal Plumbing Preliminary Design	0d	30-Jun-06 A	
Environmental		95d	20-Mar-06 A	28-Jul-06 A
A52470	Produce Environmental Surveys & Recommendations	85d	20-Mar-06 A	28-Jul-06 A
Tram Wash (Outline Design Builders Work)		33d	17-May-06 A	30-Jun-06 A
A51930	Produce Tram Wash Preliminary Design	6d	09-Jun-06 A	16-Jun-06 A
A51940	Issue Tram Wash Preliminary Design	0d		30-Jun-06 A
A52500	Select Tram Wash Location	8d	17-May-06 A	30-May-06 A
Outline Power Design		29d	22-May-06 A	30-Jun-06 A
A52160	Produce Power Supplies Requirements Specification for Depot Site	18d	22-May-06 A	16-Jun-06 A
A52800	Issue Power Supplies Requirements Specification for Depot Site	0d	30-Jun-06 A	
Depot OLE (Task870.5)		263d	24-Apr-06 A	04-May-07 A
A51950	Produce Preliminary OLE Design	36d	24-Apr-06 A	16-Jun-06 A
A51960	Produce OLE Performance Specification	9d	19-Jun-06 A	30-Jun-06 A
A51970	Issue Depot Preliminary OLE Design	0d		30-Jun-06 A
A51980	Issue Depot Preliminary OLE Performance Specification	0d		30-Jun-06 A
SDS31330	Produce Final Detailed Layout Plans	135d	05-Sep-06 A	02-Apr-07 A
SDS55920	Issue Notification Of Completion Letter- Final Detailed Layout Plans & Standard & Special Cross Sections to tie Sec6	0d		04-May-07 A
SDS69470	SDM Design Interface Review Meetings	1d	01-Dec-06 A	02-Dec-06 A
VO238 OLE rework for depot (Internal - not PM approved)		8d	14-Jan-08	23-Jan-08
A487148	OLE Rework Due to Track/Roads Changes	8d	14-Jan-08	23-Jan-08
A487158	Re-Issue Notification Of Completion Letter- Final Detailed Layout Plans & Standard & Special Cross Sections to tie	0d		23-Jan-08
Depot Lighting Design (Task870.6)		367d	18-Apr-06 A	21-Sep-07 A
A52460	Produce Yard Preliminary Lighting Design	8d	17-May-06 A	30-May-06 A
A52650	Produce Yard Provisional Lighting Layout Specification	27d	18-Apr-06 A	30-May-06 A
A52820	Issue Depot Yard Preliminary Lighting Design	0d	30-Jun-06 A	
A52830	Issue Depot Yard Provisional Lighting Layout Specification	0d	30-Jun-06 A	
A53030	Produce Yard Detailed Design Lighting Design	191d	17-Nov-06 A	13-Sep-07 A
A53040	Issue Notification Of Completion Letter- Yard Detailed Design Lighting Design	0d		21-Sep-07 A
Tram Gogar Depot Substation (Task870.7)		748d	18-Apr-06 A	27-Mar-09
A1680	Detailed Substation Layout	178d	20-Nov-06 A	27-Aug-07 A
A29130	Issue Notification Of Completion Letter- Tram Gogar Depot Substation Design to tie (Part of General Depot Submission)	0d		21-Sep-07 A
A33340	IDC Substation Detailed Design (Inc. Systems Assurance)	9d	03-Sep-07 A	14-Sep-07 A
A33360	Compile Substation Planning Submission	5d	14-Sep-07 A	20-Sep-07 A
A45720	Determine Transformer Dimensions;Cable Routes Foundation Req;Maintenace Access from Power	0d		20-Nov-06 A
A45730	Prepare Detailed Construction Drawings	141d	30-Jan-07 A	03-Sep-07 A
A48000	Receive First As Built Data from Contractor	0d		01-Oct-08*
A48010	Produce As Built Drawings	119d	02-Oct-08	27-Mar-09
A48020	Receive Final As Built Data from Contractor	0d		27-Feb-09
A48030	Issue Final As Built Drawings	0d		27-Mar-09
A52280	Substation Initial Design	27d	18-Apr-06 A	30-May-06 A
A52660	Produce Architectural Preliminary Specification for Substation	27d	18-Apr-06 A	30-May-06 A
A52850	Issue Substation Initial Design	0d		30-Jun-06 A
A52860	Issue Architectural Preliminary Specification for Substation	0d		30-Jun-06 A

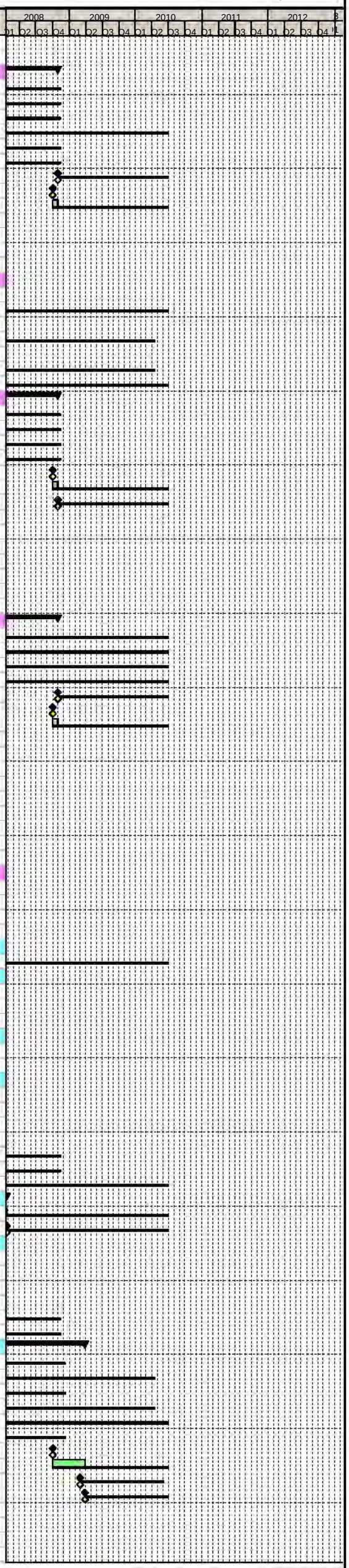

Primary Baseline
Actual Work
Remaining Work
Critical Remaining Work
Baseline Milestone
Milestone

Trams for Edinburgh
...connecting our Capital

Edinburgh Tram Project

SDS FULL DESIGN PROGRAMME @ V26

tie

Activity ID	Activity Name	Original Duration	Start	Finish
SDS81020	Address tie Comments, Other Revisions, IDC & Section Submission Package	52d	02-Nov-07 A	25-Jan-08
External Yard E&M Design		39d	09-May-06 A	30-Jun-06 A
A52870	Performance Specification for Yard E&M Services	9d	19-Jun-06 A	30-Jun-06 A
A52880	Produce Preliminary Design for LV Power Distribution	9d	19-Jun-06 A	30-Jun-06 A
A52890	Produce Preliminary Design for Water Supply	9d	19-Jun-06 A	30-Jun-06 A
A52900	Produce Preliminary Design for Compressed Air	32d	09-May-06 A	26-Jun-06 A
A52910	Produce Preliminary Design for Fire Protection	32d	09-May-06 A	26-Jun-06 A
A52920	Produce Preliminary Design for Earthing	9d	19-Jun-06 A	30-Jun-06 A
A52930	Produce Preliminary Design for CCTV	9d	19-Jun-06 A	30-Jun-06 A
A52940	Produce Preliminary Design for Security & Alarm Systems	9d	19-Jun-06 A	30-Jun-06 A
A52950	Issue Preliminary Design for External Yard E&M Design	0d		30-Jun-06 A
A52960	Issue Performance Specification for Yard E&M Services	0d		30-Jun-06 A
Operational Review		0d	13-Apr-06 A	13-Apr-06 A
A51900	PB Receive Preliminary Operation Report	0d		13-Apr-06 A
Structures		411d	15-Feb-06 A	21-Sep-07 A
A52440	Produce Structures Preliminary Design Concepts	87d	15-Feb-06 A	29-Jun-06 A
A52810	Issue Depot Structures Preliminary Design Concepts	0d	30-Jun-06 A	
VO7 - S32 - Depot Access Road Bridge (Task CR7)		380d	30-Mar-06 A	21-Sep-07 A
SDS55330	Collate Base Data on Alignment & Topo survey	22d	30-Mar-06 A	04-May-06 A
SDS55340	Define Clearances	5d	05-May-06 A	11-May-06 A
SDS55350	Develop Preliminary Structures Options	15d	05-May-06 A	26-May-06 A
SDS55360	Options Review	5d	30-May-06 A	05-Jun-06 A
SDS55370	Produce Draft GA (AIP) Drg Showing Preferred Option	7d	30-May-06 A	07-Jun-06 A
SDS55380	Issue Depot Draft GA (AIP) Drg to tie	0d		30-Jun-06 A
SDS55390	Select Preferred Design Option in Liaison with tie	4d	22-Aug-06 A	29-Aug-06 A
SDS55400	Update Base Data on Alignment & Topo Survey	2d	22-Aug-06 A	23-Aug-06 A
SDS55410	Draft AIP Document Text	4d	24-Aug-06 A	30-Aug-06 A
SDS55420	Update AIP GA Drgs	4d	25-Aug-06 A	31-Aug-06 A
SDS55430	Check of AIP Document	2d	29-Aug-06 A	30-Aug-06 A
SDS55440	Issue AIP Document to Technical Approval Authority (TAA) Form A	0d		07-Sep-06 A
SDS55450	Issue AIP Document to Planning Department	0d		11-Jul-06 A
SDS55460	TAA Review AIP & Comment	39d	06-Sep-06 A	02-Nov-06 A
SDS55480	Receive AIP Comments from TAA	0d		02-Nov-06 A
SDS55500	Incorporate AIP Comments from TAA	94d	03-Nov-06 A	30-Mar-07 A
SDS55520	Re-issue AIP to TAA	0d		30-Mar-07 A
SDS55530	TAA Review AIP	5d	02-Apr-07 A	10-Apr-07 A
SDS55540	TAA Sign Off AIP Document	0d		05-Apr-07 A
SDS55550	Issue AIP to Structures Detailed Design Team	0d		09-Apr-07 A
Depot Access Road Bridge Substructure Detailed Design		233d	23-Oct-06 A	21-Sep-07 A
SDS57420	Substructure Analysis	169d	23-Oct-06 A	13-Jul-07 A
SDS57440	Substructure Detailed Design	197d	17-Nov-06 A	21-Sep-07 A
SDS57450	Substructure Detailed Design Draughting	184d	07-Dec-06 A	21-Sep-07 A
SDS65790	Issue Detailed Design Package to CAT II Checker	0d	21-Dec-06 A	
Depot Access Road Bridge Preliminary Design Milestones		139d	21-Aug-06 A	12-Mar-07 A
SDS57390	Update Available Base Data/Info Re Alignment/Topo Survey etc	130d	21-Aug-06 A	12-Mar-07 A
Depot Access Road Bridge Superstructure Detailed Design		272d	29-Aug-06 A	21-Sep-07 A
SDS57410	Superstructure Analysis	191d	29-Aug-06 A	22-Jun-07 A
SDS57430	Superstructure Detailed Design	197d	17-Nov-06 A	21-Sep-07 A
SDS57480	Prepare Relevant Bridgeworks Specification Clauses	137d	22-Dec-06 A	27-Jul-07 A
SDS57510	Issue Detailed Design Package to CAT II Checker	0d	08-Jan-07 A	
SDS65920	Superstructure Detailed Design Draughting	127d	12-Mar-07 A	21-Sep-07 A
W16 - A8 Retaining Walls (Task870.11)		214d	30-Mar-06 A	01-Feb-07 A
SDS54640	Collate Base Data on Alignment & Topo survey	17d	30-Mar-06 A	26-Apr-06 A
SDS54650	Define Clearances	12d	12-Apr-06 A	03-May-06 A
SDS54660	Develop Preliminary Structures Options	20d	27-Apr-06 A	26-May-06 A
SDS54670	Options Review	8d	22-May-06 A	01-Jun-06 A
SDS54680	Produce Draft GA (AIP) Drg Showing Preferred Option	19d	22-May-06 A	19-Jun-06 A
SDS54690	Issue A8 RW Draft GA (AIP) Drg to tie	0d		27-Jun-06 A
SDS54700	Select Preferred Design Option in Liaison with tie	18d	23-May-06 A	19-Jun-06 A
SDS54710	Update Base Data on Alignment & Topo Survey	2d	23-May-06 A	24-May-06 A
SDS54720	Draft AIP Document Text	21d	25-May-06 A	26-Jun-06 A
SDS54730	Update AIP GA Drgs	21d	31-May-06 A	29-Jun-06 A
SDS54740	Check of AIP Document	2d	27-Jun-06 A	28-Jun-06 A
SDS54750	Issue AIP Document to Technical Approval Authority (TAA) Form A	0d		11-Jul-06 A
SDS54760	Issue AIP Document to Planning Department	0d		11-Jul-06 A
SDS54770	TAA Review AIP & Comment	14d	11-Jul-06 A	31-Jul-06 A
SDS54780	Planning Department Review AIP & Comment	14d	11-Jul-06 A	31-Jul-06 A
SDS54790	Receive AIP Comments from TAA	0d		01-Aug-06 A
SDS54800	Receive AIP Comments from Planning Department	0d		01-Aug-06 A
SDS54810	Incorporate AIP Comments from TAA	113d	02-Aug-06 A	25-Jan-07 A
SDS54830	Re-issue AIP to TAA	0d		25-Jan-07 A
SDS54840	TAA Review AIP	5d	26-Jan-07 A	01-Feb-07 A
SDS54850	TAA Sign Off AIP Document	0d		01-Feb-07 A
SDS54860	Issue AIP to Structures Detailed Design Team	0d		01-Feb-07 A
VO76 Gogar Depot Runway Extension CNS020		10d	11-Dec-06 A	22-Dec-06 A
VO1380	Feasibitlity Study for Gogar Depot Runway Extn	9d	11-Dec-06 A	22-Dec-06 A
VO244 Possible Gogar Depot Adjustment Due to EARL CNS065		254d	16-Aug-06 A	16-Aug-07 A
VO1510	Review of Depot Building to Determine Impact of Demise of EARL	12d	31-Jul-07 A	16-Aug-07 A
VO1570	Review of Depot Structures to Determine Impact of Demise of EARL	12d	31-Jul-07 A	16-Aug-07 A
VO1580	Review of OLE to Determine Impact of Demise of EARL	12d	31-Jul-07 A	16-Aug-07 A
VO1590	Review of Track to Determine Impact of Demise of EARL	12d	31-Jul-07 A	16-Aug-07 A
VO1600	Additional Management	8d	06-Aug-07 A	16-Aug-07 A
VO1790	Issue Gogar Depot Report 'Possible Adjustments' to tie	0d		16-Aug-06 A
VO250 Gogar Depot Adjustment due to EARL CNS067		351d	17-Sep-07 A	09-Feb-09
SDS57470	Depot Access Bridge Redesign IDC	9d	09-May-08	22-May-08
SDS57490	Issue Notification Of Completion Letter- Depot Access Road Bridge Structure Package to tie	0d		22-May-08
SDS57660	Issue Depot Access Road Bridge Specification Clauses For Construction	0d		06-Nov-08
VO1650	Lighting Revision	12d	30-Jan-08	15-Feb-08
VO1660	Receive Change Order Approval	0d	14-Dec-07 A	
VO1760	Systems & Comms Re Design	9d	13-Feb-08	26-Feb-08
VO1770	Track Redesign	69d	15-Oct-07 A	01-Feb-08
VO1780	Depot Layout Redesign	88d	17-Sep-07 A	01-Feb-08
VO1800	OLE Redesign	9d	04-Feb-08	15-Feb-08
VO1810	Landscaping	9d	27-Feb-08	11-Mar-08
VO1820	Issue Notification Of Completion Letter- Depot Redesign (Excl. Depot Access Bridges)	0d		26-Mar-08
VO1840	Issue For Construction Drawings Depot Inc Redesigned Scope (Excl. Depot Access Bridges)	0d		09-Feb-09
VO1850	Depot Access Bridge Redesign - AIP	52d	05-Nov-07 A	28-Jan-08
VO1860	Depot Access Bridge Redesign - Detailed Design	66d	29-Jan-08	08-May-08
VO1960	Issue For Construction - Depot Access Bridge Redesign	0d		04-Aug-08
VO1980	Ductwork Redesign	9d	13-Feb-08	26-Feb-08
VO1990	Additional Utilities Resources	9d	13-Feb-08	26-Feb-08
VO2000	Additional Interface Management Resources	9d	13-Feb-08	26-Feb-08
VO265 Gogar Depot Redesign (Internal - not PM approved)		265d	06-Nov-07 A	20-Nov-08

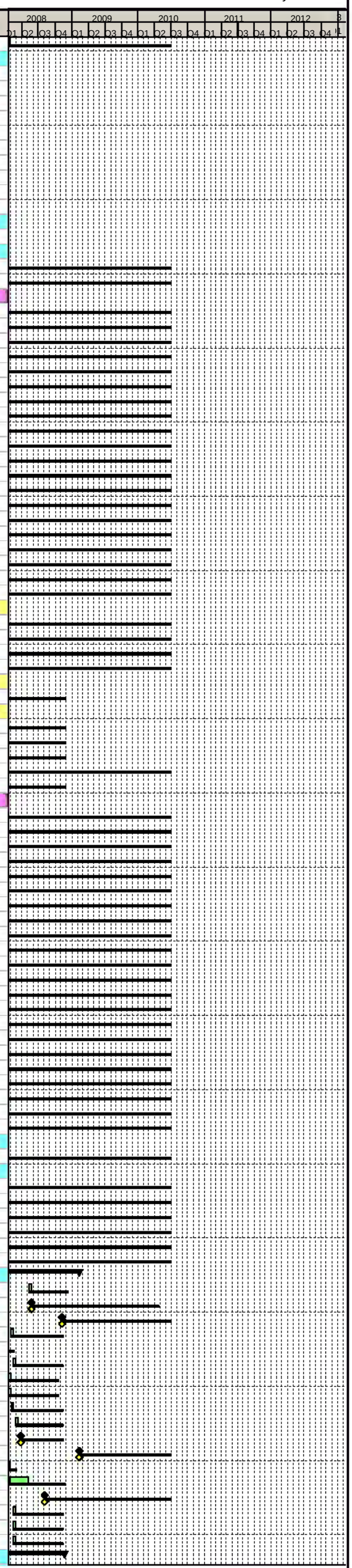

Primary Baseline
Actual Work
Remaining Work
Critical Remaining Work
Baseline Milestone
Milestone

Trams for Edinburgh ..connecting our Capital

Edinburgh Tram Project

SDS FULL DESIGN PROGRAMME @ V26

tie

Activity ID	Activity Name	Original Duration	Start	Finish
VO265 Depot Roads Redesign		223d	14-Jan-08	20-Nov-08
VO1610	Horizontal and Vertical Alignment - Depot Access Road	9d	30-Jan-08	12-Feb-08
VO2010	Receive Bridge Decks Plan and Levels from Structures	0d	29-Jan-08	
VO2120	Ancillary Design	5d	13-Feb-08	19-Feb-08
VO2130	Roads Drainage Design	5d	13-Feb-08	19-Feb-08
VO2140	Design Pumping Station Access Road	9d	14-Jan-08	25-Jan-08
VO2250	Final RSA	5d	06-Nov-08	13-Nov-08
VO2260	Incorporate RSA Comments	5d	13-Nov-08	20-Nov-08
VO265 Depot Drainage Redesgin		95d	06-Nov-07 A	26-Mar-08
VO1630	Drainage Redesign	8d	28-Feb-08	10-Mar-08
VO2270	Receive Depot Track Outfall Location	0d	04-Feb-08	
VO2340	Receive Buildings and Paved Area Outfalls (Locations and Volumes)	0d	04-Feb-08	
VO2350	Receive Earthworks Ground Water Calculations	0d	27-Feb-08	
VO2360	Receive Structure Catchment Area and Drainage Connections	0d	29-Jan-08	
VO2370	Receive Roads Drainage Design	0d	20-Feb-08	
VO2380	Agree Drainage Principles with Architect	13d	06-Nov-07 A	23-Nov-07 A
VO2390	Determine Location of Pumping Station	3d	22-Nov-07 A	26-Nov-07 A
VO2400	Attenuation Tank Design	9d	11-Mar-08	26-Mar-08
VO265 Depot Earthworks Redesign		27d	21-Jan-08	27-Feb-08
VO1620	Earthworks Design for A8 (including MX)	9d	21-Jan-08	01-Feb-08
VO2410	Receive Topo of Completed Depot MUDFA works	0d	21-Jan-08*	
VO2420	Receive Access Road Horizontal and Vertical Alignment	0d	13-Feb-08	
VO2560	Earthworks Design for Depot Access Road	9d	13-Feb-08	26-Feb-08
VO2570	Calculate Ground Water	0d	27-Feb-08	27-Feb-08
VO265 Additional Retaining Walls		171d	13-Feb-08	09-Oct-08
VO1520	Depot Internal Retaining Walls Preliminary Design	19d	13-Feb-08	12-Mar-08
VO1830	Depot Internal Retaining Walls Detailed Design Draughting	28d	23-Jul-08	03-Sep-08
VO2580	Receive Access Road Horzontal and Vertical Alignment	0d	13-Feb-08	
VO2590	Issue Detailed Design to CAT II check	0d	04-Sep-08	
VO2630	CAT II check	14d	04-Sep-08	24-Sep-08
VO2640	Incorporate CAT II comments	9d	25-Sep-08	09-Oct-08
VO2650	Receive CAT II check comments	0d	25-Sep-08	
VO2660	Issue Notification of Completion Letter to tie - Depot Internal Retaining Walls	0d		09-Oct-08
VO2670	Depot Internal Retaining Walls Detailed Design	28d	11-Jun-08	22-Jul-08
VO2680	Depot Internal Retaining Walls Produce AIP	9d	12-Mar-08	28-Mar-08
VO2690	Issue Depot Internal Retaining Walls AIP to tie	0d	28-Mar-08	
VO2700	Issue Depot Internal Retaining Walls AIP to CEC	0d	28-Mar-08	
VO2710	Issue Depot Internal Retaining Walls AIP to TAA	0d	28-Mar-08	
VO2720	tie, CEC and TAA approval period	38d	28-Mar-08	27-May-08
VO2730	Update to TAA comments	9d	27-May-08	10-Jun-08
VO2750	Receive TAA comments	0d	27-May-08	
VO2760	Receive approved and signed AIP	0d	10-Jun-08	
Gogarburn to Edinburgh Airport - Section 7 (Task800)		986d	19-Sep-05 A	28-Jul-09
Section Wide - Section 7		354d	05-May-06 A	21-Sep-07 A
Section Wide		354d	05-May-06 A	21-Sep-07 A
Preliminary Design Approvals		131d	05-May-06 A	03-Nov-06 A
SDS23580	Track IDC	38d	03-Jul-06 A	25-Aug-06 A
SDS23600	Tramstops IDC	38d	03-Jul-06 A	25-Aug-06 A
SDS23610	Roads IDC	38d	03-Jul-06 A	25-Aug-06 A
SDS23620	Structures IDC	83d	03-Jul-06 A	03-Nov-06 A
SDS23630	Substation IDC	4d	12-Jun-06 A	16-Jun-06 A
SDS24000	Informal Consultation with tie	38d	05-May-06 A	30-Jun-06 A
SDS34890	PD - Submit Section 7 Substation Deliverables	0d		30-Jun-06 A
SDS34900	PD - Submit Section 7 Track Deliverables	0d		30-Jun-06 A
SDS34910	PD - Submit Section 7 Tramstops Deliverables	0d		30-Jun-06 A
SDS34920	PD - Submit Section 7 Roads Deliverables	0d		30-Jun-06 A
SDS34930	PD - Submit Section 7 Structures Deliverables	0d		30-Jun-06 A
SDS34940	PD - Section 7 Complete - Issue to tie	0d		30-Jun-06 A
Stakeholder Reviews		33d	12-Feb-07 A	28-Mar-07 A
A569720	Review Potential Issues with tie & Determine Consultation Strategy	5d	12-Feb-07 A	16-Feb-07 A
A569860	Feedback to Design Teams for Study	26d	19-Feb-07 A	28-Mar-07 A
SDS23650	Stakeholder Review	5d	12-Feb-07 A	16-Feb-07 A
OLE (Task800.1)		157d	29-Aug-06 A	13-Apr-07 A
SDS31340	Produce Final Detailed Layout Plans	138d	29-Aug-06 A	29-Mar-07 A
SDS55930	Issue Notification Of Completion Letter- Final Detailed Layout Plans & Standard & Special Cross Section to tie Section 7	0d		13-Apr-07 A
SDS59500	IDC OLE Design	9d	29-Mar-07 A	13-Apr-07 A
SDS69480	SDM Design Interface Review Meetings	1d	01-Dec-06 A	02-Dec-06 A
VO86 Land Acquisition and Costing for Artificial Badger Setts (Section 7)		200d	07-Dec-06 A	21-Sep-07 A
VO2440	Meetings with TSS, Corderoy and NIL	184d	07-Dec-06 A	21-Sep-07 A
GOG - AIR - Section 7A (Task800.2)		986d	19-Sep-05 A	28-Jul-09
Sub Section Wide		644d	06-Mar-06 A	10-Sep-08
Sub Section Wide IDC		20d	16-Apr-08	13-May-08
A40581	Subsection Wide IDC	19d	16-Apr-08	13-May-08
Design Assurance Review		10d	03-Jul-08	16-Jul-08
SDS68060	Produce Section Wide Design Assurance Statement	9d	03-Jul-08	16-Jul-08
Consents & Approvals		396d	26-Feb-07 A	10-Sep-08
Prior Approvals		346d	26-Feb-07 A	02-Jul-08
Combined Section Prior Approval		60d	01-Apr-08	24-Jun-08
A25880	Issue Combined Package 7A for Prior Approval to CEC	0d		01-Apr-08
A25900	Receive Combined Package 7A Comments From CEC	0d		27-May-08
A25910	Prior Approval Granted for Section 7A Combined Package	0d		24-Jun-08
A40660	CEC Approval Period - 7A Combined Package	38d	01-Apr-08	27-May-08
A40670	Update 7A Combined Package to CEC Comments	19d	27-May-08	24-Jun-08
Batch 7/23		54d	14-Mar-08	29-May-08
SDS76320	Batch 7/23 Formal Approval Period	38d	01-Apr-08	28-May-08
SDS76330	Issue Batch 7/23 For Approval to CEC	0d	01-Apr-08	
SDS76340	Receive CEC Prior Approval For Batch 7/23	0d	29-May-08	
SDS76370	Batch 7/23 Gogar Church to Gogar Burn - Collation of Planning Drawings	9d	14-Mar-08*	31-Mar-08
Batch 7/24		74d	17-Sep-07 A	08-Jan-08 A
SDS76380	Batch 7/24 Formal Approval Period	38d	02-Nov-07 A	04-Jan-08 A
SDS76390	Issue Batch 7/24 For Approval to CEC	0d	02-Nov-07 A	
SDS76400	Receive CEC Prior Approval For Batch 7/24	0d	08-Jan-08 A	
SDS76430	Batch 7/24 Gogarburn Bridge - Collation of Planning Drawings	32d	17-Sep-07 A	01-Nov-07 A
Batch 7/25		53d	21-Feb-08	06-May-08
SDS76440	Batch 7/25 Formal Approval Period	38d	06-Mar-08	02-May-08
SDS76450	Issue Batch 7/25 For Approval to CEC	0d	06-Mar-08	
SDS76460	Receive CEC Prior Approval For Batch 7/25	0d	06-May-08	
SDS76490	Batch 7/25 Gogar Burn to Ingliston - Collation of Planning Drawings	9d	21-Feb-08*	05-Mar-08
Batch 7/26 NO LONGER REQUIRED		57d	05-Jul-07 A	21-Sep-07 A
SDS76500	Batch 7/26 Formal Approval Period	37d	30-Jul-07 A	21-Sep-07 A
SDS76510	Issue Batch 7/26 For Approval to CEC	0d	01-Aug-07 A	
SDS76520	NO LONGER REQUIRED DUE TO DEMISE OF EARL	0d	21-Sep-07 A	
SDS76540	Batch 7/26 EARL Bridge - Informal Consultation	17d	05-Jul-07 A	30-Jul-07 A

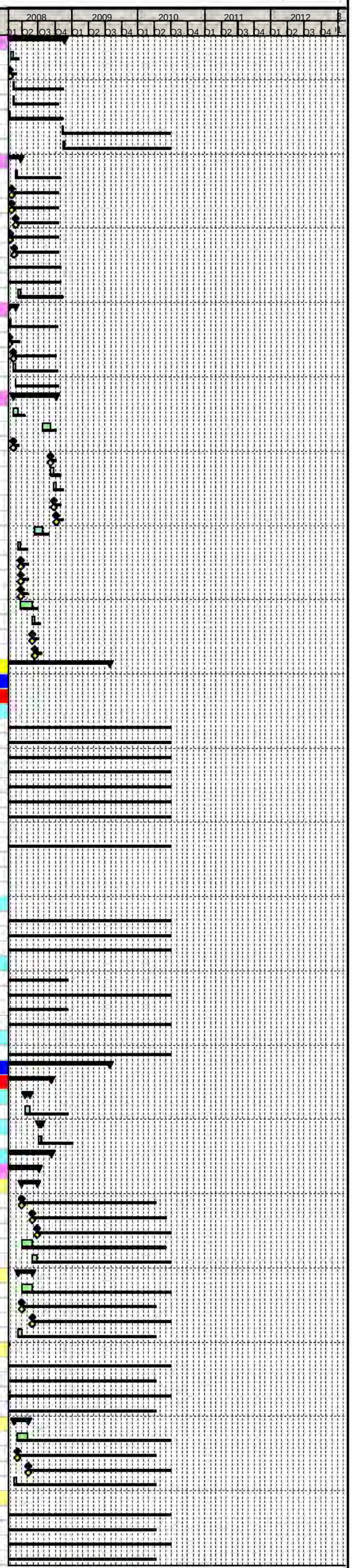

Primary Baseline
Actual Work
Remaining Work
Critical Remaining Work
Baseline Milestone
Milestone

Trams for Edinburgh
...connecting our Capital

Edinburgh Tram Project

SDS FULL DESIGN PROGRAMME @ V26

tie

Activity ID	Activity Name	Original Duration	Start	Finish
SDS76550	Batch 7/26 EARL Bridge - Collation of Planning Drawings	9d	16-Jul-07 A	27-Jul-07 A
Batch 7/27		53d	28-Feb-08	13-May-08
SDS76560	Batch 7/27 Formal Approval Period	38d	13-Mar-08	12-May-08
SDS76570	Issue Batch 7/27 For Approval to CEC	0d	13-Mar-08	
SDS76580	Receive CEC Prior Approval For Batch 7/27	0d	13-May-08	
SDS76610	Batch 7/27 Ingliston Park & Ride Tramstop - Collation of Planning Drawings	9d	28-Feb-08*	12-Mar-08
Batch 7/28		53d	06-Mar-08	20-May-08
SDS76620	Batch 7/28 Formal Approval Period	38d	20-Mar-08	19-May-08
SDS76630	Issue Batch 7/28 For Approval to CEC	0d	20-Mar-08	
SDS76640	Receive CEC Prior Approval For Batch 7/28	0d	20-May-08	
SDS76670	Batch 7/28 Ingliston to Airport - Collation of Planning Drawings	9d	06-Mar-08*	19-Mar-08
Batch 7/29		53d	11-Mar-08	23-May-08
SDS76680	Batch 7/29 Formal Approval Period	38d	27-Mar-08	22-May-08
SDS76690	Issue Batch 7/29 For Approval to CEC	0d	27-Mar-08	
SDS76700	Receive CEC Prior Approval For Batch 7/29	0d	23-May-08	
SDS76730	Batch 7/29 Edinburgh Airport - Collation of Planning Drawings	9d	11-Mar-08	26-Mar-08
Roads, Track, OLE, Landscaping, Street Lighting		42d	26-Feb-07 A	24-Apr-07 A
SDS31070	Informal Consultation With CEC & tie Over Prior Approval for Roads, Track, OLE, Landscaping and Street Lighting	38d	26-Feb-07 A	24-Apr-07 A
Tram Stop Ingliston Park and Ride		40d	14-Jan-08	07-Mar-08
A41020	Informal Consultation With CEC & tie over Prior Approval Tram Stop Ingliston Park and Ride	38d	14-Jan-08	07-Mar-08
Tram Eastfield Road Substation		76d	07-Feb-08	23-May-08
A41300	Informal Consultation With CEC & tie over Prior Approval Tram Eastfield Road Substation	38d	07-Feb-08	02-Apr-08
A41310	Prior Approval Tram Eastfield Road Substation	0d		23-May-08
Gogar Culvert Two		40d	26-Mar-08	20-May-08
563	Commence Gogar Burn Culvert Two Informal Consultation With CEC & tie Over Prior Approval	38d	26-Mar-08	20-May-08
Gogar Culvert Three		40d	26-Mar-08	20-May-08
593	Commence Gogar Burn Culvert Three Informal Consultation With CEC & tie Over Prior Approval	38d	26-Mar-08	20-May-08
Gogar Burn Retaining Wall One		40d	08-May-08	02-Jul-08
573	Commence Gogar Burn RW One Informal Consultation With CEC & tie Over Prior Approval	38d	08-May-08	02-Jul-08
Gogar Burn Retaining Wall Two		40d	14-Jan-08	07-Mar-08
583	Commence Gogar Burn RW Two Informal Consultation With CEC & tie Over Prior Approval	38d	14-Jan-08	07-Mar-08
Tram Stop Edinburgh Airport		40d	30-Jan-08	25-Mar-08
A41050	Informal Consultation With CEC & tie over Prior Approval Tram Stop Edinburgh Airport	38d	30-Jan-08	25-Mar-08
Technical Approvals		396d	26-Feb-07 A	10-Sep-08
Gogarburn Bridge Review (TAA)		140d	22-Oct-07 A	13-May-08
SDS36350	Issue Detailed Design Package to TAA	0d		28-Feb-08
SDS36380	TAA Approval Period	38d	29-Feb-08	28-Apr-08
SDS36420	Receive TAA Comments	0d		28-Apr-08
SDS36450	Incorporate TAA Comments	9d	29-Apr-08	13-May-08
SDS63030	Commence Gogar Burn Bridge Informal Consultation With CEC Over Technical Approval	88d	22-Oct-07 A	28-Feb-08
Gogar Culvert One Structure Review Period (TAA)		298d	30-May-07 A	29-Jul-08
332	Issue Gogar Burn Culvert One Design Package to TAA	0d	21-May-08	
333	TAA Gogar Burn Culvert One Design Package Review Period	38d	21-May-08	15-Jul-08
334	Receive Gogar Burn Culvert One Design Package comments from TAA	0d	16-Jul-08	
335	Incorporate TAA comments into Gogar Burn Culvert One Design Package	9d	16-Jul-08	29-Jul-08
343	Commence Gogar Burn Culvert One Informal Consultation With CEC Over Technical Approval	41d	30-May-07 A	30-Jul-07 A
Gogar Culvert One Structure Review Period (SEPA)		30d	21-May-08	01-Jul-08
337	Issue Gogar Burn Culvert One Design Package to SEPA	0d	21-May-08	
338	SEPA Gogar Burn Culvert One Design Package Review Period	19d	21-May-08	17-Jun-08
339	Receive Gogar Burn Culvert One Design Package comments from SEPA	0d	18-Jun-08	
340	Incorporate SEPA comments into Gogar Burn Culvert One Design Package	9d	18-Jun-08	01-Jul-08
Gogar Culvert Two Structure Review Period (TAA)		298d	30-May-07 A	29-Jul-08
362	Issue Gogar Burn Culvert Two Design Package to TAA	0d	21-May-08	
363	TAA Gogar Burn Culvert Two Design Package Review Period	38d	21-May-08	15-Jul-08
364	Receive Gogar Burn Culvert Two Design Package comments from TAA	0d	16-Jul-08	
365	Incorporate TAA comments into Gogar Burn Culvert Two Design Package	9d	16-Jul-08	29-Jul-08
373	Commence Gogar Burn Culvert Two Informal Consultation With CEC Over Technical Approval	41d	30-May-07 A	30-Jul-07 A
Gogar Culvert Two Structure Review Period (SEPA)		30d	21-May-08	01-Jul-08
367	Issue Gogar Burn Culvert Two Design Package to SEPA	0d	21-May-08	
368	SEPA Gogar Burn Culvert Two Design Package Review Period	19d	21-May-08	17-Jun-08
369	Receive Gogar Burn Culvert Two Design Package comments from SEPA	0d	18-Jun-08	
370	Incorporate SEPA comments into Gogar Burn Culvert Two Design Package	9d	18-Jun-08	01-Jul-08
Gogar Culvert Three Structure Review Period (TAA)		298d	30-May-07 A	29-Jul-08
392	Issue Gogar Burn Culvert Three Design Package to TAA	0d	21-May-08	
393	TAA Gogar Burn Culvert Three Design Package Review Period	38d	21-May-08	15-Jul-08
394	Receive Gogar Burn Culvert Three Design Package comments from TAA	0d	16-Jul-08	
395	Incorporate TAA comments into Gogar Burn Culvert Three Design Package	9d	16-Jul-08	29-Jul-08
403	Commence Gogar Burn Culvert Three Informal Consultation With CEC Over Technical Approval	41d	30-May-07 A	30-Jul-07 A
Gogar Culvert Three Structure Review Period (SEPA)		30d	21-May-08	01-Jul-08
397	Issue Gogar Burn Culvert Three Design Package to SEPA	0d	21-May-08	
398	SEPA Gogar Burn Culvert Three Design Package Review Period	19d	21-May-08	17-Jun-08
399	Receive Gogar Burn Culvert Three Design Package comments from SEPA	0d	18-Jun-08	
400	Incorporate SEPA comments into Gogar Burn Culvert Three Design Package	9d	18-Jun-08	01-Jul-08
Gogar Burn Retaining Wall One Review Period (TAA)		90d	08-May-08	10-Sep-08
422	Issue Gogar Burn RW One Design Package to TAA	0d	03-Jul-08	
423	TAA Gogar Burn RW One Design Package Review Period	38d	03-Jul-08	27-Aug-08
424	Receive Gogar Burn RW One Design Package comments from TAA	0d	28-Aug-08	
425	Incorporate TAA comments into Gogar Burn RW One Design Package	9d	28-Aug-08	10-Sep-08
433	Commence Gogar Burn RW One Informal Consultation With CEC Over Technical Approval	38d	08-May-08	02-Jul-08
Gogar Burn Retaining Wall Two Structure Review Period (TAA)		90d	08-May-08	10-Sep-08
452	Issue Gogar Burn RW Two Design Package to TAA	0d	03-Jul-08	
453	TAA Gogar Burn RW Two Design Package Review Period	38d	03-Jul-08	27-Aug-08
454	Receive Gogar Burn RW Two Design Package comments from TAA	0d	28-Aug-08	
455	Incorporate TAA comments into Gogar Burn RW Two Design Package	9d	28-Aug-08	10-Sep-08
463	Commence Gogar Burn RW Two Informal Consultation With CEC Over Technical Approval	38d	08-May-08	02-Jul-08
EARL Overbridge Review (TAA)		178d	15-Mar-07 A	19-Nov-07 A
SDS57780	Issue Detailed Design Package to TAA - NO LONGER REQUIRED	0d		19-Nov-07 A
SDS63040	Commence EARL Overbridge Informal Consultation With CEC Over Technical Approval	38d	15-Mar-07 A	14-May-07 A
Roads Technical Approval		372d	26-Feb-07 A	07-Aug-08
SDS31080	Issue Roads Design to Roads Authority for Approval	0d		14-May-08
SDS31090	Roads Authority Approval Period	38d	15-May-08	10-Jul-08
SDS31100	Receive Roads Authority Comments	0d		10-Jul-08
SDS31110	Update to Roads Authority Comments	19d	11-Jul-08	07-Aug-08
SDS31120	Roads Authority Informal Consultation	38d	26-Feb-07 A	24-Apr-07 A
SDS31190	Roads Technical Approval Granted	0d		07-Aug-08
Drainage Technical Approval		89d	14-Mar-08	16-Jul-08
SDS73020	Roads Authority Informal Consultation For Drainage	38d	14-Mar-08	13-May-08
SDS73030	Issue Drainage Design to Roads Authority for Approval	0d		13-May-08
SDS73040	Roads Authority Approval Period For Drainage	38d	14-May-08	09-Jul-08
SDS73050	Receive Roads Authority Comments For Drainage	0d		09-Jul-08
SDS73060	Update to Roads Authority Comments For Drainage	5d	10-Jul-08	16-Jul-08
SDS73070	Drainage Technical Approval Granted	0d		16-Jul-08
VO243 EARL - Tram Changes		115d	29-Oct-07 A	16-Apr-08

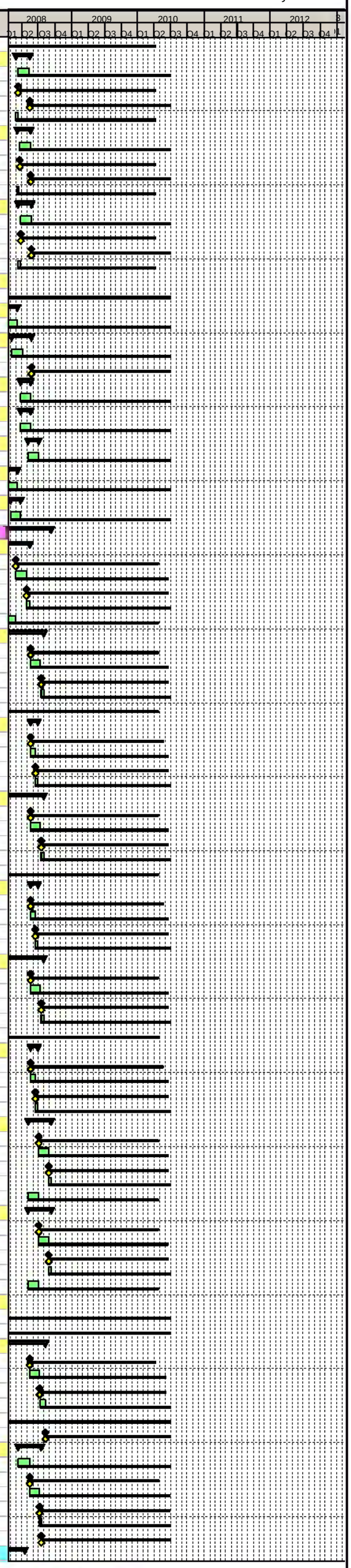

Primary Baseline
Actual Work
Remaining Work
Critical Remaining Work
Baseline Milestone
Milestone

Trams for Edinburgh ..connecting our Capital

Edinburgh Tram Project

SDS FULL DESIGN PROGRAMME @ V26

tie

Activity ID	Activity Name	Original Duration	Start	Finish
SDS80200	Collate Drainage Limiting Levels	5d	16-Nov-07 A	22-Nov-07 A
SDS80210	Drainage Indicative Design	41d	16-Nov-07 A	24-Jan-08
SDS80220	Track Vertical Alignment Detailed Design Inc NIL + New Bridge Future Proof	46d	05-Nov-07 A	18-Jan-08
SDS80230	Tram Stops Detailed Design	14d	21-Jan-08	08-Feb-08
SDS80240	Substation Detailed Design	14d	18-Feb-08	07-Mar-08
SDS80250	Roads Detailed Design	19d	21-Jan-08	15-Feb-08
SDS80260	OLE Detailed Design	14d	21-Jan-08	08-Feb-08
SDS80270	Ducting Detailed Design	1d	28-Jan-08	28-Jan-08
SDS80280	Prepare Composite Cross Sections	9d	11-Feb-08	22-Feb-08
SDS80290	Earthworks Detailed Design	9d	25-Feb-08*	07-Mar-08
SDS80310	Landscaping	5d	10-Mar-08	14-Mar-08
SDS80320	Authority to Proceed	0d	29-Oct-07 A	
SDS80330	Badger Mitigation Constraints Passed to Drainage Team	6d	29-Oct-07 A	05-Nov-07 A
SDS80340	Final Drainage Detailed Design	9d	26-Mar-08	08-Apr-08
SDS80350	Receive Park & Ride Level Information From tie	0d	02-Nov-07 A	
SDS80950	Issue Notification of Completion Letter to tie for Drainage Design VO243	0d	16-Apr-08	
SDS80960	Issue Notification of Completion Letter to tie for VO243 Earl Tram Changes EXCL Drainage	0d	17-Mar-08	
Track (Task800.2.1)		522d	12-May-06 A	30-May-08
A4020	First Pass Mx Horizontal and Vertical Alignment	17d	12-May-06 A	07-Jun-06 A
A4030	Handover Alignment Design P Way to Roads	0d		08-Jun-06 A
A4040	Coordination Meeting/Workshop Between PWay/Roads & Resolution of Major Conflicts	1d	08-Jun-06 A	08-Jun-06 A
SDS30790	Revise Alignment to Match Roads First Pass Vertical	5d	11-Jan-07 A	17-Jan-07 A
SDS30840	Handover Alignment Design Track to Roads	0d		17-Jan-07 A
SDS31210	Revise Alignment to Inc. Preliminary Design Comments	94d	11-Jul-06 A	28-Nov-06 A
SDS31230	Handover Alignment Design Track to Roads	0d		01-Dec-06 A
SDS57130	Issue Track Alignment Design to tie	0d		08-Feb-07 A
SDS59620	IDC Track Design	11d	22-Jan-07 A	06-Feb-07 A
SDS61050	Revise Track Alignment to Inc. Modelling Changes	1d	15-Dec-06 A	15-Dec-06 A
SDS70240	tie Approval Period	19d	08-Feb-07 A	07-Mar-07 A
SDS70250	Receive tie Comments	0d	03-Apr-07 A	
SDS70260	Incorporate tie Comments	1d	04-May-07 A	05-May-07 A
SDS75190	Address tie Comments, EARL,Ingliston PnR, Other Revs, IDC & Section Submission Package	191d	06-Aug-07 A	30-May-08
Roads, Street Lighting & Landscaping (Task800.2.2)		619d	07-Mar-06 A	07-Aug-08
A4050	Route Appreciation/Junct Layout & Determine with tie & CEC Works Extent	3d	22-May-06 A	24-May-06 A
A4060	Frontage Surveys	30d	07-Mar-06 A	21-Apr-06 A
A4070	Set Up Mx Models	2d	22-May-06 A	23-May-06 A
A4080	Produce Preliminary Horizontal Road Alignment Design (Inc Lanes & Parking Zones)	3d	25-May-06 A	30-May-06 A
A4090	Preliminary Rd Junction Configuration Design	2d	31-May-06 A	01-Jun-06 A
A4100	Preliminary Road Safety Audit	2d	21-Jun-06 A	22-Jun-06 A
A4110	Review & Amend TRO Drawings & Schedules for Modifications Required Post Prelim Design	1d	12-Jun-06 A	12-Jun-06 A
A4120	Handover Alignment Design Roads to Pway	0d		23-Jun-06 A
A4130	Coordination Meeting/Workshop Between Roads & Pway Teams	1d	23-Jun-06 A	23-Jun-06 A
A5590	Undertake Road Marking, Pedestrian Req & Traffic Signalling Design	2d	19-Jun-06 A	20-Jun-06 A
SDS30800	Produce First Pass Vertical Alignment	4d	15-Jan-07 A	18-Jan-07 A
SDS30820	Handover Alignment Design Roads to Pway	0d		18-Jan-07 A
SDS30850	Revise Vertical Alignment to Match Final Track Alignment	2d	08-Feb-07 A	09-Feb-07 A
SDS30860	Horizontal & Vertical Alignment Design Complete	0d		09-Feb-07 A
SDS30870	Issue Roads Design to tie for Approval Section 7	0d		09-Mar-07 A
SDS30880	Cross Check all Horizontal Design Aspects With Vertical Alignment	2d	16-Feb-07 A	19-Feb-07 A
SDS30890	tie Approval Period	19d	12-Mar-07 A	10-Apr-07 A
SDS30900	tie Comments Not Received - Change In Protocol Going Forward	0d		04-May-07 A
SDS30920	Issue Construction Drawings	0d		07-Aug-08
SDS30930	Road Safety Audit Stage 2 (Intermediate)	5d	02-Mar-07 A	08-Mar-07 A
SDS30940	Insert Intermediate RSA Comments	2d	08-Mar-07 A	09-Mar-07 A
SDS30950	Produce Site Clearance Drawings & Schedule	2d	23-Feb-07 A	27-Feb-07 A
SDS30960	Produce Fencing, Barriers & Guardrails Design	7d	12-Feb-07 A	20-Feb-07 A
SDS30970	Produce Street Lighting Design (& Liaise With OLE)	7d	31-Jan-07 A	08-Feb-07 A
SDS30980	Produce Traffic Signal Only Ducting	4d	01-Mar-07 A	07-Mar-07 A
SDS30990	Produce Soft Landscaping Design	26d	31-Jan-07 A	09-Mar-07 A
SDS31000	Produce Traffic Signals Layout	11d	12-Feb-07 A	27-Feb-07 A
SDS31010	Produce Traffic Signs Design (Signs, Markings, Signals)	7d	12-Feb-07 A	20-Feb-07 A
SDS31020	Produce Earthworks Design	9d	10-Sep-07 A	21-Sep-07 A
SDS31240	Revise Alignment to Inc. Final Track Horizontal Alignment (Horizontal Design Freeze) & Issue to Substn Designers	6d	08-Jan-07 A	15-Jan-07 A
SDS31250	Produce Kerbs, Footway & Paved Area Design	5d	12-Feb-07 A	16-Feb-07 A
SDS31260	Produce Pavement Design	2d	22-Feb-07 A	23-Feb-07 A
SDS31270	IDC (Inc. Systems Assurance)	2d	22-Feb-07 A	23-Feb-07 A
SDS56730	Issue Notification Of Completion Letter- Hard & Soft Landscaping Design to tie Section 7A	0d		14-Mar-08
SDS56880	Issue Street Lighting Design (Inc. Any OLE Combined Pole Design) to tie Section 7	0d		14-Mar-07 A
SDS59410	Compile Planning Drawings	2d	08-Mar-07 A	09-Mar-07 A
SDS59850	Advise Track, Stops, Modellers Changes To Accom RSA1 & PD Comments	7d	13-Nov-06 A	21-Nov-06 A
SDS59860	Pass Guidance/Envelope To Track & Others As Necessary	0d		21-Nov-06 A
SDS61060	Revise Horizontal to Inc. Track Horizontal Alignment, RSA1 & PD Comments	7d	11-Dec-06 A	19-Dec-06 A
SDS61070	Revise Alignment to Inc. Minor Changes From Traffic Modelling	5d	20-Dec-06 A	03-Jan-07 A
SDS67210	Street Lighting Survey Work	44d	03-Jul-06 A	06-Sep-06 A
SDS80140	Final RSA	9d	23-Apr-08	07-May-08
SDS80150	Incorporate Final RSA Comments	5d	08-May-08	14-May-08
Drainage		290d	12-Mar-07 A	29-Apr-08
SDS72170	Hydraulic Modelling & First Pass Dainage Design	116d	12-Mar-07 A	07-Sep-07 A
SDS72180	Receipt of Drainage Survey Information	0d		14-Jan-08*
SDS72190	Outfall Consent/Approval from SW NOT REQUIRED	0d		24-Aug-07 A
SDS72200	Outfall Consent/Approval from CEC	0d		14-Jan-08*
SDS72210	Outfall Consent/Approval from SEPA	0d		10-May-07 A
SDS72220	Compile Drainage Package	2d	20-Sep-07 A	21-Sep-07 A
SDS72230	Issue Drainage Design Completion Letter to tie for Approval Section 7A	0d		27-Sep-07 A
SDS73290	Final Detailed Drainage Design	54d	29-Jun-07 A	19-Sep-07 A
SDS80900	Compile Drainage Package	5d	09-Apr-08	15-Apr-08
SDS80910	Confirm Drainage and amend if necessary	9d	16-Apr-08	29-Apr-08
Boundary & Accomodation Works (Task800.2.3)		106d	26-Mar-07 A	20-Aug-07 A
SDS42610	Detailed Design of Boundary & Accomodation Works	96d	26-Mar-07 A	20-Aug-07 A
SDS42620	Issue Notification Of Completion Letter- Detailed Design of Boundary & Accomodation Works Section 7A	0d		20-Aug-07 A
Utilities (Task800.2.4)		482d	06-Mar-06 A	28-Jan-08
A12810	Close Out PD Issues and Re-issue PD Drawings to SUCs	26d	04-Aug-06 A	14-Sep-06 A
A12820	Design Development	331d	29-Aug-06 A	28-Jan-08
A12830	Initial Consultations With SUCs and IDTs	38d	29-Aug-06 A	23-Oct-06 A
A12840	MUDFA Appointment	0d		23-Oct-06 A
A12860	IDC	9d	30-Apr-07 A	14-May-07 A
A12870	Issue DD to SUC For Approval	0d		14-May-07 A
A12880	SUC Approval Period	68d	15-May-07 A	27-Aug-07 A
A14140	Access to MUDFA and Others	132d	04-Oct-06 A	30-Apr-07 A
A14150	Consult With SUCs on DD	132d	04-Oct-06 A	30-Apr-07 A
UTIL1600	Issue to Statutory Utility Companies (SUCs)	0d		30-Jun-06 A
UTIL170	Section 7A - Pre-Preliminary Design (Utilities)	76d	06-Mar-06 A	30-Jun-06 A
UTIL190	GPR Survey in BAA land	9d	19-Jun-06 A	30-Jun-06 A

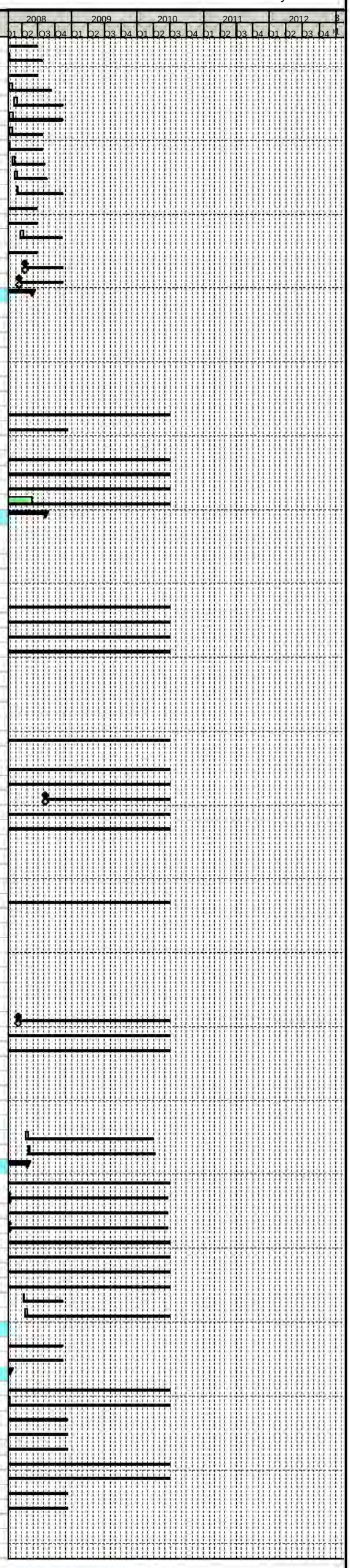

Primary Baseline
Actual Work
Remaining Work
Critical Remaining Work
Baseline Milestone
Milestone

Trams for Edinburgh
...connecting our Capital

Edinburgh Tram Project

SDS FULL DESIGN PROGRAMME @ V26

tie

Activity ID	Activity Name	Original Duration	Start	Finish
TRO's (Task800.2.5)		8d	03-Jul-06 A	12-Jul-06 A
SDS33830	Collate Exisiting TROs	8d	03-Jul-06 A	12-Jul-06 A
SDS33840	Receive Preliminary Roads Design	0d		12-Jul-06 A
TTRO's (Task800.2.6)		138d	23-Oct-06 A	11-May-07 A
TTRO360	SDS Produce Affected Roads Listing For MUDFA Works	27d	23-Oct-06 A	30-Nov-06 A
TTRO450	SDS Produce Affected Roads Listing For INFRACO Works	36d	12-Mar-07 A	04-May-07 A
TTRO790	Issue Affected Roads Listing For MUDFA Works To Dundas & Wilson	0d		30-Nov-06 A
TTRO800	Dundas & Wilson Draft TTRO Schedule For MUDFA Works	0d	01-Dec-06 A	01-Dec-06 A
TTRO860	Issue Affected Roads Listing For INFRACO Works To Dundas & Wilson	0d		04-May-07 A
TTRO870	Dundas & Wilson Draft TTRO Schedule For INFRACO Works	5d	04-May-07 A	11-May-07 A
Environmental		424d	14-Aug-06 A	16-Apr-08
SDS61390	Produce Protected Species Mitigation Plan	65d	14-Aug-06 A	17-Nov-06 A
SDS61400	Issue Protected Species Plan to tie	0d		22-Dec-06 A
SDS61410	tie Approval Period	17d	03-Jan-07 A	26-Jan-07 A
SDS61420	Update Protected Species Mitigation Plan to tie Comments	9d	31-Jan-07 A	13-Feb-07 A
SDS61430	Issue Protected Species Mitigation Plan to Scottish National Heritage	0d		16-Feb-07 A
SDS61440	Final Scottish National Heritage Approval Period	19d	19-Feb-07 A	16-Mar-07 A
SDS61450	Update Protected Species Mitigation Plan to Scottish National Heritage Comments	6d	09-Apr-08	16-Apr-08
SDS61460	Final Protected Species Mitigation Plan Approval	0d		16-Apr-08
SDS67610	Selection of New Sett/ Holt Locations	41d	20-Nov-06 A	26-Jan-07 A
SDS67620	Design New Setts/ Holt	20d	09-Oct-06 A	06-Nov-06 A
SDS67630	Issue New Setts/ Holt Design Section 7A	0d		08-Jan-07 A
VO50 Gogarburn Partnership Report CNS021		24d	22-Aug-07 A	24-Sep-07 A
VO1390	Review Gogarburn Partnership Report as issued by tie	20d	22-Aug-07 A	20-Sep-07 A
VO1400	Issue SDS response to the review of the Gogarburn Partnership report	0d		24-Sep-07 A
GOG - IPR		986d	19-Sep-05 A	28-Jul-09
CON-1000	Requirements Definition (Contract Dates)	62d	19-Sep-05 A	19-Dec-05 A
Tram Stop Ingliston Park and Ride (Task800.2.7)		796d	12-Jun-06 A	28-Jul-09
A27340	Prepare Tram Stop Planning Submission Drawings for Issue to Planning Drawings Team	144d	29-Jun-07 A	08-Feb-08
A27350	Produce Engineering Detailed Design Drawings	9d	11-Feb-08	22-Feb-08
A27360	Compile Planning Drawings Tram Stop Ingliston Park and Ride	9d	11-Feb-08	22-Feb-08
A27380	Issue Notification Of Completion Letter- Ingliston Tram Stop Design to tie	0d		22-Feb-08
A27710	Tram Stop Design Complete - Drawings Issued for Construction	0d		13-May-08
A27720	Site Visit with tie & CEC To Review Preliminary Design	1d	31-Jan-07 A	31-Jan-07 A
A28190	Advance Levels Work (Liaision With Halcrows)	6d	22-Sep-06 A	29-Sep-06 A
A44560	IDC Tram Stop Design for Planning Submission (Inc. Systems Asssurance)	56d	08-Feb-07 A	04-May-07 A
A45000	Prepare Detailed Design Stop Drawings	5d	01-Feb-07 A	07-Feb-07 A
A48540	Produce As Built Drawings	200d	03-Oct-08	28-Jul-09
A48550	Receive Final As Built Data from the Contractor	0d		30-Jun-09
A48560	Receive First As Built Data from the Contractor	0d		01-Oct-08*
A48570	Issue Final As Built Drawings	0d		28-Jul-09
A5030	General Arrangement Drawings	14d	12-Jun-06 A	30-Jun-06 A
A5800	Issue Tram Stop GA Drawings for Ingliston Park & Ride	0d		30-Jun-06 A
Structures		644d	06-Mar-06 A	10-Sep-08
S29 Gogarburn Bridge (Task800.2.8)		530d	13-Apr-06 A	13-May-08
SDS55560	Collate Base Data on Alignment & Topo survey	7d	13-Apr-06 A	25-Apr-06 A
SDS55570	Define Clearances	9d	17-Apr-06 A	02-May-06 A
SDS55580	Develop Preliminary Structures Options	14d	20-Apr-06 A	11-May-06 A
SDS55590	Options Review	5d	12-May-06 A	18-May-06 A
SDS55600	Produce Draft GA (AIP) Drg Showing Preferred Option	17d	05-May-06 A	31-May-06 A
SDS55610	Issue Gogar Burn Bridge Draft GA (AIP) Drg to tie	0d		31-May-06 A
SDS55620	Select Preferred Design Option in Liaison with tie	16d	15-May-06 A	07-Jun-06 A
SDS55630	Update Base Data on Alignment & Topo Survey	2d	01-Jun-06 A	02-Jun-06 A
SDS55640	Draft AIP Document Text	5d	05-Jun-06 A	09-Jun-06 A
SDS55650	Update AIP GA Drgs	7d	08-Jun-06 A	16-Jun-06 A
SDS55660	Check of AIP Document	2d	12-Jun-06 A	13-Jun-06 A
SDS55670	Issue AIP Document to Technical Approval Authority (TAA) Form A	0d		26-Jun-06 A
SDS55680	Issue AIP Document to Planning Department	0d		14-Aug-06 A
SDS55690	TAA Review AIP & Comment	33d	27-Jun-06 A	14-Aug-06 A
SDS55700	Planning Department Review AIP & Comment	24d	11-Jul-06 A	15-Aug-06 A
SDS55710	Receive AIP Comments from TAA	0d		15-Aug-06 A
SDS55720	Receive AIP Comments from Planning Department	0d		15-Aug-06 A
SDS55730	Incorporate AIP Comments from TAA	9d	16-Aug-06 A	30-Aug-06 A
SDS55740	Incorporate AIP Comments from Planning Department	8d	16-Aug-06 A	30-Aug-06 A
SDS55750	Re-issue AIP to TAA	0d		31-Aug-06 A
SDS55760	TAA Review AIP	28d	07-Sep-06 A	18-Oct-06 A
SDS55770	TAA Sign Off AIP Document	0d		18-Oct-06 A
SDS55780	Issue AIP to Structures Detailed Design Team	0d		18-Oct-06 A
Gogarburn Bridge Preliminary Design Milestones		10d	24-Jul-06 A	04-Aug-06 A
SDS36250	Update Available Base Data/Info Re Alignment/Topo Survey etc	9d	24-Jul-06 A	04-Aug-06 A
Gogarburn Bridge Substructure Detailed Design		341d	12-Sep-06 A	21-Jan-08
SDS36270	Substructure Analysis	120d	12-Sep-06 A	16-Mar-07 A
SDS36290	Substructure Detailed Design	112d	02-Oct-06 A	23-Mar-07 A
SDS36310	Substructure Detailed Design Draughting	283d	02-Oct-06 A	12-Dec-07 A
SDS66000	Issue Notification Of Completion Letter- Gogar Burn Bridge Substructure Package to tie	0d		14-Dec-07 A
SDS66010	Issue Detailed Design Package to CAT II Checker (as appropriate)	0d		27-Nov-06 A
SDS66020	Bridge CATII Review Period	246d	27-Nov-06 A	12-Dec-07 A
SDS66040	Receive and Incorporate Substructure CATII Check Comments	246d	04-Jan-07 A	21-Jan-08
Gogarburn Bridge Design Package For Construction / Fabrication		0d	13-May-08	13-May-08
SDS36510	Issue Gogarburn Bridge Specification clauses For Construction	0d		13-May-08
Gogarburn Bridge Superstructure Detailed Design		348d	07-Aug-06 A	14-Dec-07 A
SDS36260	Superstructure Analysis	101d	07-Aug-06 A	12-Jan-07 A
SDS36280	Superstructure Detailed Design	87d	26-Sep-06 A	09-Feb-07 A
SDS36300	Superstructure Detailed Design Draughting	173d	02-Oct-06 A	29-Jun-07 A
SDS36330	Prepare Relevant Bridgeworks Specification Clauses	14d	27-Nov-06 A	15-Dec-06 A
SDS36340	Issue Notification Of Completion Letter- Gogar Burn Bridge Superstructure Package to tie for Comments	0d		14-Dec-07 A
SDS36360	Issue Detailed Design Package to CAT II Checker	0d		24-Nov-06 A
SDS36370	Bridge CATII Review Period	21d	27-Nov-06 A	03-Jan-07 A
SDS36430	Receive and Incorporate Superstructure CATII Check Comments	172d	04-Jan-07 A	24-Sep-07 A
S10 Gogar Culvert One		613d	06-Mar-06 A	30-Jul-08
SDS46560	Review of Previous Work	9d	06-Mar-06 A	17-Mar-06 A
SDS46570	Optioneering	14d	20-Mar-06 A	07-Apr-06 A
SDS46580	Initial Design	8d	10-Apr-06 A	21-Apr-06 A
SDS46590	Production of AIP Drawing	4d	24-Apr-06 A	27-Apr-06 A
SDS46600	Issue AIP Drawing to tie	0d		27-Apr-06 A
SDS46610	Checking	19d	28-Apr-06 A	26-May-06 A
SDS46620	tie AIP Drawing Review Period	23d	28-Apr-06 A	02-Jun-06 A
SDS46630	Undertake Consultations	27d	22-May-06 A	30-Jun-06 A
SDS46640	Receive AIP Drawing Comments from tie	0d		02-Jun-06 A
SDS46650	Incorporate tie Comments into AIP Drawing	4d	05-Jun-06 A	08-Jun-06 A
SDS46660	Production of AIP Document	14d	19-May-06 A	09-Jun-06 A
SDS46670	Issue Gogar Culvert 1 AIP Document to tie	0d		30-Jun-06 A
SDS46680	tie AIP Document Review Period	5d	14-Aug-06 A	18-Aug-06 A

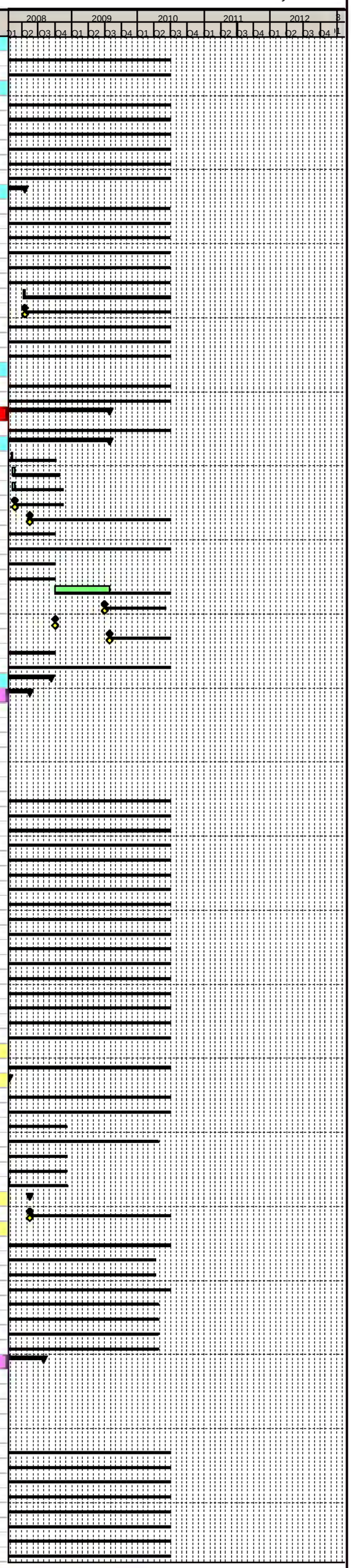

Primary Baseline
Actual Work
Remaining Work
Critical Remaining Work
Baseline Milestone
Milestone

Trams for Edinburgh ..connecting our Capital

Edinburgh Tram Project

SDS FULL DESIGN PROGRAMME @ V26

tie

Activity ID	Activity Name	Original Duration	Start	Finish
SDS46690	Receive AIP Document Comments from tie	0d		16-Jun-06 A
SDS46700	Incorporate tie Comments into AIP Document	4d	21-Aug-06 A	24-Aug-06 A
SDS46710	Issue AIP Document & Drawing to TAA	0d		24-Aug-06 A
SDS46720	TAA AIP Document & Drawing Review Period	1d	25-Aug-06 A	28-Aug-06 A
SDS46730	Issue AIP Document & Drawing to Planning Department	0d		11-Jul-06 A
SDS46740	Planning Department AIP Document & Drawing Review Period	32d	11-Jul-06 A	28-Aug-06 A
SDS46750	Recieve AIP Document & Drawing Comments from TAA	0d		18-Jun-07 A
SDS46760	Incorporate TAA Comments into AIP Document & Drawing	136d	11-Dec-06 A	13-Jul-07 A
SDS46770	Recieve AIP Document & Drawing Comments from Planning Department	0d		20-Nov-06 A
SDS46780	Incorporate Planning Department TAA Comments into AIP Document & Drawing	5d	20-Nov-06 A	24-Nov-06 A
Preliminary Design Milestones		168d	30-Oct-06 A	02-Jul-07 A
315	Receipt of tie PD Acceptance	0d	20-Nov-06 A	
316	Receipt of Alignment Prelim Design Package	0d	30-Oct-06 A	
317	Receipt of OLE Prelim Design Package	0d	20-Nov-06 A	
318	Receipt of Ground Investigation Data & Interpretative Geotechnical Report	0d	12-Feb-07 A	
319	Receipt of an Approved and Signed AIP document	0d	02-Jul-07 A	
Structure Detailed Design		423d	18-Sep-06 A	20-May-08
321	Structure Detailed Design	178d	18-Sep-06 A	22-Jun-07 A
322	Structure Detailed Design Draughting NOW INCLUDED IN 465	187d	05-Dec-06 A	24-Sep-07 A
323	Issue Structure Detailed Design Package to CAT I Checker	0d	02-Jul-07 A	
324	Structure CAT I Check ABANDONED	13d	03-Jul-07 A	20-Jul-07 A
325	Receive & Incorporate CAT I comments	9d	23-Apr-08	06-May-08
326	Re Issue Gogar Burn Culvert One Structure Revised Design Package to tie	0d		20-May-08
344	Structure CAT I Check	19d	26-Mar-08	22-Apr-08
366	Issue Notification Of Completion Letter- Gogar Burn Culvert One Structure Design Package to tie	0d		20-Nov-07 A
465	Review Design & Amend if Necessary	30d	11-Feb-08	25-Mar-08
515	Agree Drainage Interface	0d	25-Feb-08	
SDS62170	IDC	9d	07-May-08	20-May-08
Issue Gogar Culvert One Structure Design Package For Construction/Fabrication		0d	30-Jul-08	30-Jul-08
341	Issue Gogar Culvert One Structure Design Package For Construction/Fabrication	0d	30-Jul-08	
VO29 S33 EARL Overbridge (Task800.2.13) CNS011		268d	31-Jul-06 A	17-Aug-07 A
EARL Overbridge Preliminary Design Milestones		10d	31-Jul-06 A	11-Aug-06 A
SDS57670	Update Available Base Data/Info Re Alignment/Topo Survey etc	9d	31-Jul-06 A	11-Aug-06 A
EARL Overbridge Superstructure Detailed Design		263d	07-Aug-06 A	17-Aug-07 A
SDS57690	Superstructure Analysis	52d	07-Aug-06 A	23-Oct-06 A
SDS57710	Superstructure Detailed Design	129d	05-Sep-06 A	23-Mar-07 A
SDS57740	Superstructure Detailed Design Draughting	159d	19-Sep-06 A	25-May-07 A
SDS57750	Check of Drawings (IDC)	4d	13-Aug-07 A	16-Aug-07 A
SDS57760	Prepare Relevant Bridgeworks Specification Clauses	14d	21-Nov-06 A	11-Dec-06 A
SDS57770	Issue Notification Of Completion Letter- EARL Overbridge Superstructure Package to tie	0d		17-Aug-07 A
SDS57790	Issue Detailed Design Package to CAT II Checker	0d		20-Nov-06 A
SDS57800	Bridge CATII Review Period	130d	10-Jan-07 A	27-Jul-07 A
SDS57850	Receive and Incorporate CATII Check Comments	140d	10-Jan-07 A	10-Aug-07 A
SDS66340	Prepare Planning Drawings	9d	02-Aug-07 A	16-Aug-07 A
EARL Overbridge Substructure Detailed Design		253d	21-Aug-06 A	17-Aug-07 A
SDS57700	Substructure Analysis	48d	21-Aug-06 A	31-Oct-06 A
SDS57720	Substructure Detailed Design	129d	05-Sep-06 A	23-Mar-07 A
SDS57730	Substructure Detailed Design Draughting	191d	12-Sep-06 A	06-Jul-07 A
SDS66210	Issue Notification Of Completion Letter- EARL Overbridge Substructure Package to tie	0d		17-Aug-07 A
SDS66220	Issue Detailed Design Package to CAT II Checker	0d		22-Nov-06 A
SDS66230	Bridge CATII Review Period	28d	22-Nov-06 A	10-Jan-07 A
SDS66250	Receive and Incorporate CATII Check Comments	39d	11-Jan-07 A	09-Mar-07 A
W14 Gogar Burn Retaining Wall One		474d	30-Oct-06 A	10-Sep-08
503	Revise Preliminary Design	19d	11-Feb-08	07-Mar-08
513	Produced Revised AIP Document	5d	10-Mar-08	14-Mar-08
523	Issue Revised PD to TAA	0d		14-Mar-08
533	Issue Revised PD to tie	0d		14-Mar-08
543	TAA approval period	38d	17-Mar-08	09-May-08
553	tie approval period	38d	17-Mar-08	09-May-08
603	Receive Approved and Sign AIP document	0d	26-May-08	
613	Recieve tie PD acceptance	0d	26-May-08	
703	Receive TAA comments	0d	12-May-08	
713	Update to TAA comments	9d	12-May-08	23-May-08
Preliminary Design Milestones		68d	30-Oct-06 A	12-Feb-07 A
405	Receipt of tie PD Acceptance	0d	11-Dec-06 A	
406	Receipt of Alignment Prelim Design Package	0d	30-Oct-06 A	
407	Receipt of OLE Prelim Design Package	0d	11-Dec-06 A	
408	Receipt of Ground Investigation Data & Interpretative Geotechnical Report	0d	12-Feb-07 A	
409	Receipt of an Approved and Signed AIP document	0d	15-Jan-07 A	
Structure Detailed Design		78d	17-Mar-08	02-Jul-08
411	Structure Detailed Design	28d	17-Mar-08	25-Apr-08
412	Structure Detailed Design Draughting	26d	31-Mar-08	07-May-08
413	Issue Structure Detailed Design Package to CAT I Checker	0d	08-May-08	
414	Structure CAT I Check	19d	08-May-08	04-Jun-08
415	Receive & Incorporate CAT I comments	9d	05-Jun-08	18-Jun-08
416	Issue Notification Of Completion Letter- Gogar Burn Retaining Wall One Structure Design Package to tie	0d		02-Jul-08
SDS62200	IDC	9d	19-Jun-08	02-Jul-08
Issue Gogar Burn Retaining Wall One Structure Design Package For Construction/Fabrication		0d	10-Sep-08	10-Sep-08
431	Issue Gogar Burn Retaining Wall One Structure Design Package For Construction/Fabrication	0d		10-Sep-08
W15 Gogar Burn Retaining Wall Two		474d	30-Oct-06 A	10-Sep-08
623	Revise Preliminary Design	19d	11-Feb-08	07-Mar-08
633	Produced Revised AIP Document	5d	10-Mar-08	14-Mar-08
643	Issue Revised PD to TAA	0d		14-Mar-08
653	Issue Revised PD to tie	0d		14-Mar-08
663	TAA approval period	38d	17-Mar-08	09-May-08
673	tie approval period	38d	17-Mar-08	09-May-08
683	Receive TAA acceptance	0d	12-May-08	
693	Recieve tie acceptance	0d	12-May-08	
Preliminary Design Milestones		68d	30-Oct-06 A	12-Feb-07 A
435	Receipt of tie PD Acceptance	0d	11-Dec-06 A	
436	Receipt of Alignment Prelim Design Package	0d	30-Oct-06 A	
437	Receipt of OLE Prelim Design Package	0d	11-Dec-06 A	
438	Receipt of Ground Investigation Data & Interpretative Geotechnical Report	0d	12-Feb-07 A	
439	Receipt of an Approved and Signed AIP document	0d	15-Jan-07 A	
Structure Detailed Design		78d	17-Mar-08	03-Jul-08
441	Structure Detailed Design	28d	17-Mar-08	25-Apr-08
442	Structure Detailed Design Draughting	26d	31-Mar-08	07-May-08
443	Issue Structure Detailed Design Package to CAT I Checker	0d	08-May-08	
444	Structure CAT I Check	19d	08-May-08	04-Jun-08
445	Receive & Incorporate CAT I comments	9d	05-Jun-08	18-Jun-08
446	Issue Notification Of Completion Letter- Gogar Burn Retaining Wall Two Structure Design Package to tie	0d	03-Jul-08	
SDS62210	IDC	9d	19-Jun-08	02-Jul-08
Issue Gogar Burn Retaining Wall Two Structure Design Package For Construction/Fabrication		0d	10-Sep-08	10-Sep-08

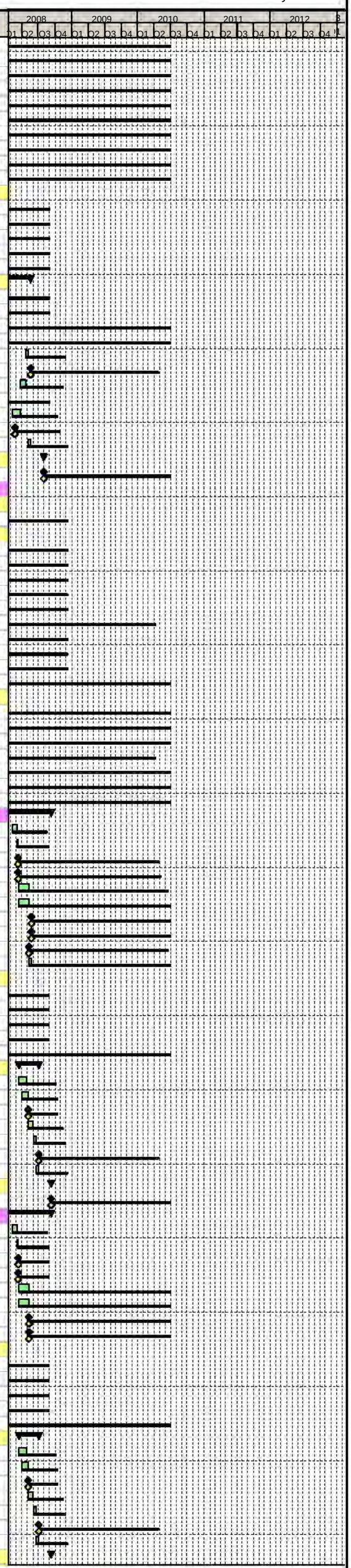

Primary Baseline
Actual Work
Remaining Work
Critical Remaining Work
Baseline Milestone
Milestone

Trams for Edinburgh
...connecting our Capital

Edinburgh Tram Project

SDS FULL DESIGN PROGRAMME @ V26

tie

Activity ID	Activity Name	Original Duration	Start	Finish
461	Issue Gogar Burn Retaining Wall Two Structure Design Package For Construction/Fabrication	0d		10-Sep-08
Tram Eastfield Road Substation (Task800.2.9)		463d	06-Jun-06 A	02-Apr-08
A549050	Preliminary Design of Substation	5d	06-Jun-06 A	12-Jun-06 A
A549940	Detailed Design Civils	276d	15-Jan-07 A	14-Mar-08
A549950	Detailed Architecture Design	327d	20-Oct-06 A	14-Mar-08
A549960	IDC on Detailed Design (Inc. Systems Assurance)	6d	17-Mar-08	26-Mar-08
A549970	Issue Notification Of Completion Letter- Tram Eastfield Road Substation Planning Submission to tie	0d		02-Apr-08
A550130	Substation Consultation Period	28d	19-Jun-06 A	27-Jul-06 A
A550250	Issue of Ingliston Park & Ride Substation Design	0d		30-Jun-06 A
A550290	Compile Substation Planning Submission	5d	27-Mar-08	02-Apr-08
IPR - AIR		986d	19-Sep-05 A	28-Jul-09
CON-1030	Requirements Definition (Contract Dates)	62d	19-Sep-05 A	19-Dec-05 A
Tram Stop Edinburgh Airport (Task800.2.10)		805d	30-May-06 A	28-Jul-09
A27740	Prepare Tram Stop Planning Submission Drawings for Issue to Planning Drawings Team	169d	22-Jun-07 A	07-Mar-08
A27750	Produce Engineering Detailed Design Drawings	11d	10-Mar-08	25-Mar-08
A27760	Compile Planning Drawings Tram Stop Edinburgh Airport	9d	10-Mar-08	21-Mar-08
A27780	Issue Notification Of Completion Letter- Edinburgh Airport Tram Stop Design to tie	0d		25-Mar-08
A27800	Tram Stop Design Complete - Drawings Issued for Construction	0d		24-Jun-08
A27810	Site Visit with tie & CEC To Review Preliminary Design	1d	31-Jan-07 A	31-Jan-07 A
A27920	Advance Works Edinburgh Airport Tramstop (As On Hold)	24d	14-Aug-06 A	19-Sep-06 A
A28260	Awaiting Letter From tie To Confirm Design & Construction Phasing Req For Earl	0d	24-Sep-07 A	
A44620	IDC Tram Stop Design for Planning Submission (Inc. Systems Asssurance)	56d	08-Feb-07 A	04-May-07 A
A45010	Prepare Detailed Design Stop Drawings	5d	01-Feb-07 A	07-Feb-07 A
A48580	Produce As Built Drawings	200d	03-Oct-08	28-Jul-09
A48590	Receive Final As Built Data from the Contractor	0d		30-Jun-09
A48600	Receive First As Built Data from the Contractor	0d		01-Oct-08*
A48610	Issue Final As Built Drawings	0d		28-Jul-09
A5040	General Arrangement Drawings	23d	30-May-06 A	30-Jun-06 A
A5810	Issue Tram Stop GA Drawings for Edinburgh Airport	0d		30-Jun-06 A
VO72 Eastfield Ave & Airport Tramstop CNS018		249d	30-Oct-06 A	22-Oct-07 A
A45060	Airport Stop BAA/EARL Phasing Design Coordination NOW SUPERSEEDED BY VO243	184d	07-Dec-06 A	21-Sep-07 A
A45070	EARL Impact on Track and Roads Design CNS018	64d	30-Oct-06 A	08-Feb-07 A
A45080	Receive Change Order for CNS018 NOW SUPERCEDED BY VO243	0d	22-Oct-07 A	
A45090	Additional Preliminary Design for Gogarburn Retaining Walls due to CNS018 NOW SUPERCEDED BY VO243	1d	22-Oct-07 A	22-Oct-07 A
A45100	Receive CNS018	0d	30-Oct-06 A	
A45130	Update to Track due to CNS018	16d	17-Jan-07 A	08-Feb-07 A
A45140	Additional Edinburgh Airport Tramstop Design due to CNS018 NOW SUPERSEEDED BY VO243	37d	30-Jul-07 A	21-Sep-07 A
Structures		623d	20-Feb-06 A	30-Jul-08
W11 Gogar Culvert Two		305d	06-Mar-06 A	15-May-07 A
SDS46800	Review of Previous Work	9d	06-Mar-06 A	17-Mar-06 A
SDS46810	Optioneering	14d	20-Mar-06 A	07-Apr-06 A
SDS46820	Initial Design	8d	10-Apr-06 A	21-Apr-06 A
SDS46830	Production of AIP Drawing	4d	24-Apr-06 A	27-Apr-06 A
SDS46840	Issue AIP Drawing to tie	0d		27-Apr-06 A
SDS46850	Checking	19d	28-Apr-06 A	26-May-06 A
SDS46860	tie AIP Drawing Review Period	5d	22-May-06 A	26-May-06 A
SDS46870	Undertake Consultations	18d	22-May-06 A	19-Jun-06 A
SDS46880	Receive AIP Drawing Comments from tie	0d		26-May-06 A
SDS46890	Incorporate tie Comments into AIP Drawing	4d	30-May-06 A	02-Jun-06 A
SDS46900	Production of AIP Document	15d	19-May-06 A	12-Jun-06 A
SDS46910	Issue Gogar Culvert Two AIP Document to tie	0d		30-Jun-06 A
SDS46920	tie AIP Document Review Period	5d	22-May-06 A	26-May-06 A
SDS46930	Receive AIP Document Comments from tie	0d		19-Jun-06 A
SDS46940	Incorporate tie Comments into AIP Document	4d	14-Aug-06 A	17-Aug-06 A
SDS46950	Issue AIP Document & Drawing to TAA	0d		17-Aug-06 A
SDS46960	TAA AIP Document & Drawing Review Period	6d	18-Aug-06 A	28-Aug-06 A
SDS46970	Issue AIP Document & Drawing to Planning Department	0d		11-Jul-06 A
SDS46980	Planning Department AIP Document & Drawing Review Period	32d	11-Jul-06 A	28-Aug-06 A
SDS46990	Recieve AIP Document & Drawing Comments from TAA	0d		08-May-07 A
SDS47000	Incorporate TAA Comments into AIP Document & Drawing	97d	11-Dec-06 A	15-May-07 A
SDS47010	Recieve AIP Document & Drawing Comments from Planning Department	0d		20-Nov-06 A
SDS47020	Incorporate Planning Department TAA Comments into AIP Document & Drawing	5d	20-Nov-06 A	24-Nov-06 A
SDS47030	Issue AIP Drawing & Document to Structures Detailed Design Team	0d		15-May-07 A
S31 Gogar Burn Culvert Two		443d	30-Oct-06 A	30-Jul-08
Preliminary Design Milestones		168d	30-Oct-06 A	02-Jul-07 A
345	Receipt of tie PD Acceptance	0d	11-Dec-06 A	
346	Receipt of Alignment Prelim Design Package	0d	30-Oct-06 A	
347	Receipt of OLE Prelim Design Package	0d	20-Nov-06 A	
348	Receipt of Ground Investigation Data & Interpretative Geotechnical Report	0d	15-Jan-07 A	
349	Receipt of an Approved and Signed AIP document	0d	02-Jul-07 A	
Structure Detailed Design		367d	05-Dec-06 A	20-May-08
351	Structure Detailed Design	126d	05-Dec-06 A	22-Jun-07 A
352	Structure Detailed Design Draughting NOW INCLUDED IN 475	187d	05-Dec-06 A	24-Sep-07 A
353	Issue Structure Detailed Design Package to CAT I Checker	0d	02-Jul-07 A	
354	Structure CAT I Check ABANDONED	13d	03-Jul-07 A	20-Jul-07 A
355	Receive & Incorporate CAT I comments	9d	23-Apr-08	06-May-08
356	Re Issue Gogar Burn Culvert Two Structure Revised Design Package to tie	0d		20-May-08
374	Structure CAT I Check	19d	26-Mar-08	22-Apr-08
475	Review Design & Amend if Necessary	30d	11-Feb-08	25-Mar-08
505	Agree Drainage Interface	0d	25-Feb-08	
SDS62180	IDC	9d	07-May-08	20-May-08
SDS62181	Issue Notification Of Completion Letter- Gogar Burn Culvert Two Structure Design Package to tie	0d		20-Nov-07 A
Issue Gogar Burn Culvert Two Structure Design Package For Construction/Fabrication		0d	30-Jul-08	30-Jul-08
371	Issue Gogar Burn Culvert Two Structure Design Package For Construction/Fabrication	0d	30-Jul-08	
S34 Gogar Burn Culvert Three		443d	30-Oct-06 A	30-Jul-08
Preliminary Design Milestones		168d	30-Oct-06 A	02-Jul-07 A
375	Receipt of tie PD Acceptance	0d	11-Dec-06 A	
376	Receipt of Alignment Prelim Design Package	0d	30-Oct-06 A	
377	Receipt of OLE Prelim Design Package	0d	11-Dec-06 A	
378	Receipt of Ground Investigation Data & Interpretative Geotechnical Report	0d	08-May-07 A	
379	Receipt of an Approved and Signed AIP document	0d	02-Jul-07 A	
Structure Detailed Design		251d	25-May-07 A	20-May-08
381	Structure Detailed Design	19d	25-May-07 A	22-Jun-07 A
382	Structure Detailed Design Draughting NOW INCLUDED IN 485	54d	04-Jul-07 A	24-Sep-07 A
383	Issue Structure Detailed Design Package to CAT I Checker	0d	02-Jul-07 A	
384	Structure CAT I Check ABANDONED	13d	03-Jul-07 A	20-Jul-07 A
385	Receive & Incorporate CAT I comments	9d	23-Apr-08	06-May-08
386	Re Issue Gogar Burn Culvert Three Structure Revised Design Package to tie	0d		20-May-08
404	Structure CAT I Check	19d	26-Mar-08	22-Apr-08
485	Review Design & Amend if Necessary	30d	11-Feb-08	25-Mar-08
495	Agree Drainage Interface	0d	25-Feb-08	
SDS62190	IDC	9d	07-May-08	20-May-08
SDS62191	Issue Notification Of Completion Letter- Gogar Burn Culvert Three Structure Design Package to tie	0d		20-Nov-07 A

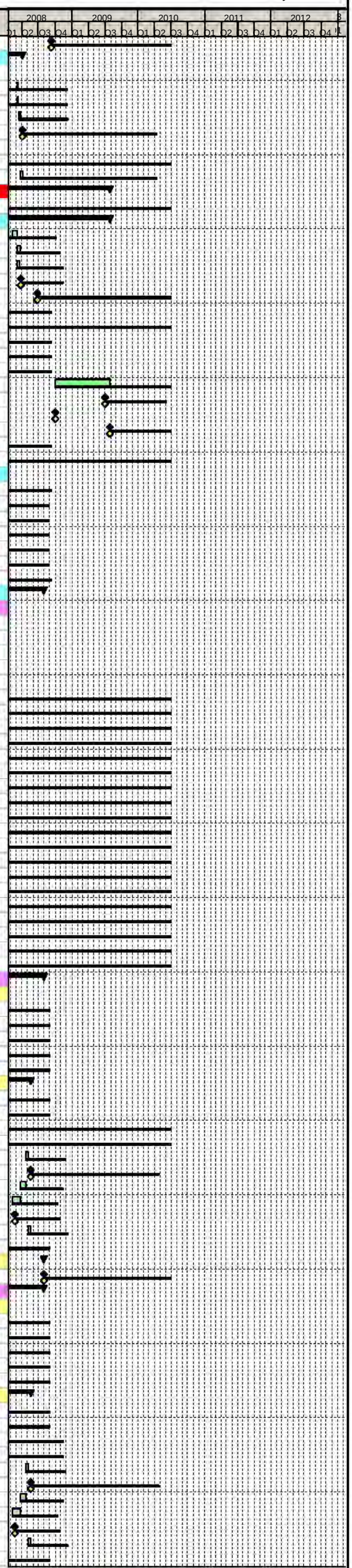

Primary Baseline
Actual Work
Remaining Work
Critical Remaining Work
Baseline Milestone
Milestone

Trams for Edinburgh
...connecting our Capital

Edinburgh Tram Project

SDS FULL DESIGN PROGRAMME @ V26

tie

Activity ID	Activity Name	Original Duration	Start	Finish
Issue Gogar Burn Culvert Three Structure Design Package For Construction/Fabrication		0d	30-Jul-08	30-Jul-08
401	Issue Gogar Burn Culvert Three Structure Design Package For Construction/Fabrication	0d	30-Jul-08	
W14 Gogarburn Retaining Wall One (Task800.2.11)		200d	20-Feb-06 A	27-Nov-06 A
SDS46320	Review of Previous Work	9d	20-Feb-06 A	03-Mar-06 A
SDS46330	Optioneering	36d	06-Mar-06 A	28-Apr-06 A
SDS46340	Initial Design	9d	02-May-06 A	15-May-06 A
SDS46350	Production of AIP Drawing	31d	09-May-06 A	23-Jun-06 A
SDS46360	Issue AIP Drawing to tie	0d		30-Jun-06 A
SDS46370	Checking	21d	24-May-06 A	23-Jun-06 A
SDS46380	tie AIP Drawing Review Period	4d	14-Aug-06 A	17-Aug-06 A
SDS46390	Undertake Consultations	4d	14-Aug-06 A	17-Aug-06 A
SDS46400	Receive AIP Drawing Comments from tie	0d		17-Aug-06 A
SDS46410	Incorporate tie Comments into AIP Drawing	4d	14-Aug-06 A	17-Aug-06 A
SDS46420	Production of AIP Document	4d	14-Aug-06 A	17-Aug-06 A
SDS46430	Issue Gogar Burn Retaining Wall One AIP Document to tie	0d		17-Aug-06 A
SDS46440	tie AIP Document Review Period	5d	14-Aug-06 A	18-Aug-06 A
SDS46450	Receive AIP Document Comments from tie	0d		18-Aug-06 A
SDS46460	Incorporate tie Comments into AIP Document	5d	14-Aug-06 A	18-Aug-06 A
SDS46470	Issue AIP Document & Drawing to TAA	0d		21-Nov-06 A
SDS46480	TAA AIP Document & Drawing Review Period	5d	21-Aug-06 A	28-Aug-06 A
SDS46490	Issue AIP Document & Drawing to Planning Department	0d		11-Jul-06 A
SDS46500	Planning Department AIP Document & Drawing Review Period	32d	11-Jul-06 A	28-Aug-06 A
SDS46510	Recieve AIP Document & Drawing Comments from TAA	0d		21-Nov-06 A
SDS46520	Incorporate TAA Comments into AIP Document & Drawing	5d	17-Nov-06 A	24-Nov-06 A
SDS46530	Recieve AIP Document & Drawing Comments from Planning Department	0d		20-Nov-06 A
SDS46540	Incorporate Planning Department TAA Comments into AIP Document & Drawing	5d	17-Nov-06 A	24-Nov-06 A
SDS46550	Issue AIP Drawing & Document to Structures Detailed Design Team	0d		27-Nov-06 A
W15 Gogarburn Retaining Wall Two (Task800.2.12)		203d	20-Feb-06 A	30-Nov-06 A
SDS46080	Review of Previous Work	9d	20-Feb-06 A	03-Mar-06 A
SDS46090	Optioneering	36d	06-Mar-06 A	28-Apr-06 A
SDS46100	Initial Design	9d	02-May-06 A	15-May-06 A
SDS46110	Production of AIP Drawing	31d	09-May-06 A	23-Jun-06 A
SDS46120	Issue Gogar Burn RW2 AIP Drawing to tie	0d		30-Jun-06 A
SDS46130	Checking	4d	14-Aug-06 A	17-Aug-06 A
SDS46140	tie AIP Drawing Review Period	4d	14-Aug-06 A	17-Aug-06 A
SDS46150	Undertake Consultations	4d	14-Aug-06 A	17-Aug-06 A
SDS46160	Receive AIP Drawing Comments from tie	0d		17-Aug-06 A
SDS46170	Incorporate tie Comments into AIP Drawing	4d	14-Aug-06 A	17-Aug-06 A
SDS46180	Production of AIP Document	4d	14-Aug-06 A	17-Aug-06 A
SDS46190	Issue Gogar Burn Retaining Wall Two AIP Document to tie	0d		30-Jun-06 A
SDS46200	tie AIP Document Review Period	5d	14-Aug-06 A	18-Aug-06 A
SDS46210	Receive AIP Document Comments from tie	0d		18-Aug-06 A
SDS46220	Incorporate tie Comments into AIP Document	5d	14-Aug-06 A	18-Aug-06 A
SDS46230	Issue AIP Document & Drawing to TAA	0d		18-Aug-06 A
SDS46240	TAA AIP Document & Drawing Review Period	5d	21-Aug-06 A	28-Aug-06 A
SDS46250	Issue AIP Document & Drawing to Planning Department	0d		11-Jul-06 A
SDS46260	Planning Department AIP Document & Drawing Review Period	32d	11-Jul-06 A	28-Aug-06 A
SDS46270	Recieve AIP Document & Drawing Comments from TAA	0d		17-Nov-06 A
SDS46280	Incorporate TAA Comments into AIP Document & Drawing	5d	22-Nov-06 A	29-Nov-06 A
SDS46290	Recieve AIP Document & Drawing Comments from Planning Department	0d		21-Nov-06 A
SDS46300	Incorporate Planning Department TAA Comments into AIP Document & Drawing	5d	22-Nov-06 A	29-Nov-06 A
SDS46310	Issue AIP Drawing & Document to Structures Detailed Design Team	0d		30-Nov-06 A
Ingliston Park & Ride to Newbridge - Section 8		66d	19-Sep-05 A	19-Dec-05 A
IPR - NEB (Section 8A)		66d	19-Sep-05 A	19-Dec-05 A
IPR - INW - RAS - NBS		66d	19-Sep-05 A	19-Dec-05 A
CON-1060	Requirements Definition (Contract Dates)	62d	19-Sep-05 A	19-Dec-05 A

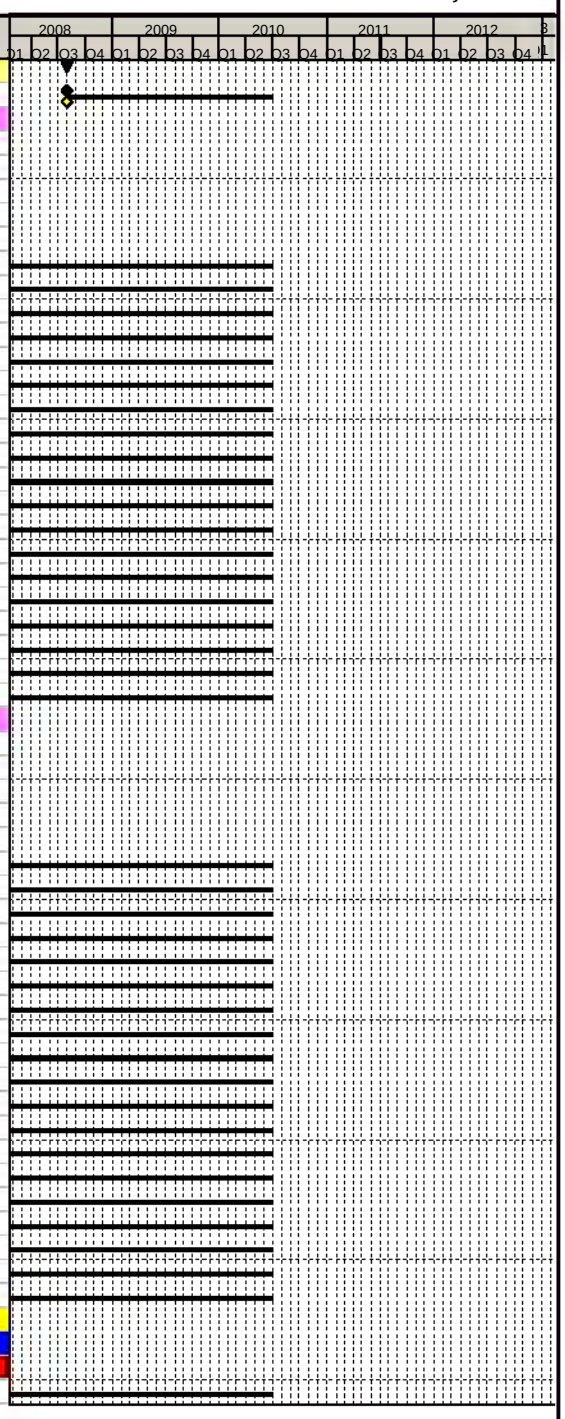

Primary Baseline
Actual Work
Remaining Work
Critical Remaining Work
Baseline Milestone
Milestone

Trams for Edinburgh ...connecting our Capital

Edinburgh Tram Project

SDS FULL DESIGN PROGRAMME @ V26

tie

Activity ID	Activity Name	Original Duration	Start	Finish
Total		652d	12-Jul-06 A	09-Feb-09
ULE90130 SDS Edinburgh Tram V26 update on V25 - Actual progress to Data Date 14th Jan 08 Rec 04F...		652d	12-Jul-06 A	09-Feb-09
MS - Programme Key Milestones		344d	31-Jul-07 A	03-Dec-08
MS - Programme Key Milestones		344d	31-Jul-07 A	03-Dec-08
MS - Programme Key Milestones		344d	31-Jul-07 A	03-Dec-08
SDS Key Milestones		344d	31-Jul-07 A	03-Dec-08
Detail Design Submittals to tie		344d	31-Jul-07 A	03-Dec-08
	Complete All Detail Design Submittals to tie	0d		03-Dec-08
	Detail Design Submittals to tie Complete For Section 1	0d		17-Sep-08
	Detail Design Submittals to tie Complete For Section 2	0d		31-Jul-07 A
	Detail Design Submittals to tie Complete For Section 3	0d		14-Jan-08
	Detail Design Submittals to tie Complete For Section 5	0d		03-Jul-08
	Detail Design Submittals to tie Complete For Section 6	0d		26-Mar-08
	Detail Design Submittals to tie Complete For Section 7	0d		03-Jul-08
Detail Design Submittals to CEC		109d	08-Feb-08	10-Jul-08
	Detail Design Submittals to CEC Complete For Section 6	0d		09-Jun-08
	Detail Design Submittals to CEC Complete For Section 1	0d		10-Jul-08
	Detail Design Submittals to CEC Complete For Section 3	0d		11-Apr-08
	Detail Design Submittals to CEC Complete For Section 2	0d		08-Feb-08
	Detail Design Submittals to CEC Complete For Section 5	0d		01-Apr-08
	Detail Design Submittals to CEC Complete For Section 7	0d		01-Apr-08
EPWA - ENGINEERING Project Wide Activities		556d	04-Oct-06 A	10-Dec-08
EPWA - ENGINEERING Project Wide Activities		556d	04-Oct-06 A	10-Dec-08
EPWA - ENGINEERING Project Wide Activities		556d	04-Oct-06 A	10-Dec-08
Track (Task200.1.1)		198d	15-Dec-06 A	28-Sep-07 A
Track Category Plans		22d	14-Mar-07 A	13-Apr-07 A
	Issue Final Track Catagory Plans to tie	0d		14-Mar-07 A
	tie Approval Period	19d	15-Mar-07 A	13-Apr-07 A
Typical Tramway Cross Sections		22d	14-Mar-07 A	13-Apr-07 A
	Issue Final Typical Tramway Cross Sections to tie	0d		14-Mar-07 A
	tie Approval Period	19d	15-Mar-07 A	13-Apr-07 A
Trackform & Surface Finish Plans & Schedules		0d	10-Aug-07 A	10-Aug-07 A
	Issue Final Trackform/Surface Finish Plans & Schedules to tie	0d		10-Aug-07 A
Wheel / Rail Interface Report		0d	28-Sep-07 A	28-Sep-07 A
	Issue Final Wheel / Rail Interface Report to tie	0d		28-Sep-07 A
Alignment Criteria		20d	21-Feb-07 A	21-Mar-07 A
	Issue Final Track Alignment Criteria to tie	0d		21-Feb-07 A
	tie Approval Period	19d	22-Feb-07 A	21-Mar-07 A
Structure Gauge & Clearances Drawings		50d	23-Jan-07 A	02-Apr-07 A
	Issue Final Structure Gauge & Clearance Drawings to tie	0d		02-Apr-07 A
	tie Approval Period	19d	23-Jan-07 A	19-Feb-07 A
Trackform Typical Cross Sections & Details		0d	28-Sep-07 A	28-Sep-07 A
	Issue Final Trackform Cross Sections & Details	0d		28-Sep-07 A
Trackwork Specification		0d	28-Sep-07 A	28-Sep-07 A
	Issue Final Trackwork Specification to tie	0d		28-Sep-07 A
Switches & Crossing Design		0d	13-Sep-07 A	13-Sep-07 A
	Issue Final S&C Layout Plans to tie	0d		13-Sep-07 A
Rail Section Schedule		0d	22-Aug-07 A	22-Aug-07 A
	Issue Rail Section Schedule to tie	0d		22-Aug-07 A
Rail Grade Schedule		0d	22-Aug-07 A	22-Aug-07 A
	Issue Rail Grade Schedule to tie	0d		22-Aug-07 A
Rail Movement Joint Schedule		0d	22-Aug-07 A	22-Aug-07 A
	Issue Rail Movement Joint Schedule to tie	0d		22-Aug-07 A
Check Rail Schedule		0d	22-Aug-07 A	22-Aug-07 A
	Issue Check Rail Schedule to tie	0d		22-Aug-07 A
Guard Rail Schedule		0d	22-Aug-07 A	22-Aug-07 A
	Issue Guard Section Schedule to tie	0d		22-Aug-07 A
Vehicle Arrestment Schedule		0d	22-Aug-07 A	22-Aug-07 A
	Issue Vehicle Arrestment Schedule to tie	0d		22-Aug-07 A
Isolatable Rail Joint Schedule		0d	22-Aug-07 A	22-Aug-07 A
	Issue Isolatable Rail Joint Schedule to tie	0d		22-Aug-07 A
Rail Sections		22d	22-Dec-06 A	01-Feb-07 A
	Issue Rail Section Report to tie	0d		22-Dec-06 A
	tie Approval Period	19d	05-Jan-07 A	01-Feb-07 A
Guard Rails		39d	15-Dec-06 A	19-Feb-07 A
	Issue Guard Rail Drawings to tie	0d		15-Dec-06 A
	tie Approval Period	24d	18-Dec-06 A	30-Jan-07 A
	Update to tie Comments	13d	31-Jan-07 A	19-Feb-07 A
	Re-Issue Guard Rail Schedule to tie	0d		19-Feb-07 A
Switching & Crossing Schedule		0d	22-Aug-07 A	22-Aug-07 A
	Issue Switching & Crossing Schedule to tie	0d		22-Aug-07 A
Modelling (Task200.2)		398d	13-Oct-06 A	13-May-08
Traffic Modelling (Task 200.2.1)		398d	13-Oct-06 A	13-May-08
Model Based On Preliminary Design		21d	13-Oct-06 A	13-Nov-06 A
	Issue Patronage/Revenue Forecasts to tie (For Issue Of Business Case to Scottish Executive)	0d		13-Oct-06 A
	SDS Issue Modelling Report to tie	0d		17-Oct-06 A

USB00000084_0001

Activity ID	Activity Name	Original Duration	Start	Finish
	tie Approval Period	19d	17-Oct-06 A	13-Nov-06 A
	Traffic Modelling First Pass	0d	24-Sep-07 A	24-Sep-07 A
	Issue Notification of Phase Completion Letter to tie (Activity D)	0d		24-Sep-07 A
	Issue Notification of Phase Completion Letter to tie (Activity F)	0d		24-Sep-07 A
	Main Traffic Model Iteration	0d	13-May-08	13-May-08
	Issue Traffic Modelling Update Report to tie (& Approval From CEC)	0d		13-May-08
	Tram Simulation (Task 200.2.2)	239d	20-Apr-07 A	31-Mar-08
	Stage 3 - Operational Simulations for Preliminary Design	223d	25-Apr-07 A	12-Mar-08
	Modelling Excluding Section 4	223d	25-Apr-07 A	12-Mar-08
	Issue Report of Simulation Results to tie	0d		12-Mar-08
	Issue Runtime Model To Reflect Charette Changes	0d		25-Apr-07 A
	Stage 4 - Traction Power	0d	31-Mar-08	31-Mar-08
	Issue Traction Power Simulation Report	0d		31-Mar-08
	VO82 Additional Runtime Modelling (Sector 3 in and out) (Not tie Approved)	0d	20-Apr-07 A	20-Apr-07 A
	Issue Discussion Simulation Report	0d		20-Apr-07 A
	Environmental (Task 200.3)	105d	03-Nov-06 A	10-Apr-07 A
	General Environmental	59d	17-Jan-07 A	10-Apr-07 A
	Issue Updated Environmental Management Plan for Detailed Design to tie	0d		17-Jan-07 A
	Re-Issue Updated Environmental Management Plan for Detailed Design to tie	0d		10-Apr-07 A
	Ecology	35d	03-Nov-06 A	22-Dec-06 A
	Design Surveys	35d	03-Nov-06 A	22-Dec-06 A
	Issue Final Protected Species Mitigation Strategy to tie & SNH	0d		22-Dec-06 A
	Issue to tie Mitigation Strategy for Treatment of Jap Knotweed & Giant Hogweed	0d		03-Nov-06 A
	System & Communications (Task200.5)	253d	15-Dec-06 A	14-Dec-07 A
	SCC General Activities and High Level	0d	14-Dec-07 A	14-Dec-07 A
	Issue SCC Technical Specification and Drawings to tie	0d		14-Dec-07 A
	Comms - Technical Activities	0d	15-Dec-06 A	15-Dec-06 A
	Operational Radio System Propagation Modelling Report For Issue To tie	0d		15-Dec-06 A
	TRO's (Task200.4)	198d	22-Feb-08	26-Nov-08
	Order Preparation & Process	81d	05-Aug-08	26-Nov-08
	Issue Draft Relevant Maps to CEC For Comments	0d		05-Aug-08
	Issue Draft Relevant Maps to tie For Comments	0d		05-Aug-08
	Receive tie and CEC comments on proposed traffic regulation meansures	9d	06-Aug-08	19-Aug-08
	Informal briefing session with Consultees based on relevant maps	5d	06-Aug-08	12-Aug-08
	Preparation of final draft of Relevant Map showing proposed traffic regulation measures	5d	20-Aug-08	26-Aug-08
	Issue Final Draft Relevant Maps to CEC For Approval	0d		26-Aug-08
	Issue Final Draft Relevant Maps to tie For Approval	0d		26-Aug-08
	Briefing Session for listed Consultees on Final Draft Orders	5d	20-Nov-08	26-Nov-08
	Briefing Session for Members on Final Draft Orders	5d	20-Nov-08	26-Nov-08
	Design Process	20d	22-Feb-08	21-Mar-08
	LOD	0d	22-Feb-08	22-Feb-08
	Full Draft TRO proposal available	0d		22-Feb-08
	Wider Area TRO Design	0d	21-Mar-08	21-Mar-08
	Issue Detailed TRO to CEC for Approval	0d		21-Mar-08
	TTROs	132d	11-Dec-06 A	22-Jun-07 A
	Re-Issue MUDFA TTRO Order & Schedules To tie	0d		12-Mar-07 A
	Issue MUDFA TTRO Order & Schedules To tie	0d		11-Dec-06 A
	Issue INFRACO TTRO Order & Schedules To tie	0d		22-Jun-07 A
	Traction Power (Task 200.6.1)	556d	04-Oct-06 A	10-Dec-08
	Traction Power Systems - General TPS - System Wide	76d	25-Oct-06 A	19-Feb-07 A
	Issue Generic TSS Protection Schematic (TPS 20)	0d		18-Dec-06 A
	Issue DC Protection Settings For Complete TPS System (TPS 21)	0d		16-Feb-07 A
	Issue Traction Power Cable and Routing Schedule (TPS 12DD) (Owner T Bishop)	0d		10-Jan-07 A
	Issue Generic SCADA I / O Schedules (TPS 28)	0d		16-Jan-07 A
	Issue Electrical Nonenclature Report - Iteration 2 (TPS 25)	0d		16-Jan-07 A
	Issue Interim TPS Scheme Development Report (TPS 3DDB)	0d		20-Nov-06 A
	Issue Substation Sites and DNO Requirements Summary Report (TPS 16)	0d		19-Feb-07 A
	Issue TPS AC / DC Feeding and Sectioning Diagram (TPS 17)	0d		13-Nov-06 A
	Issue Traction Power Equipment and Substation Equipment Specification - Update 2 (TPS18) to tie	0d		21-Dec-06 A
	Issue Updated Earthing and Bonding Policy (TPS 8DD)	0d		18-Dec-06 A
	Issue DC Feeding and Sectioning Diagrams (Iteration 1)	0d		25-Oct-06 A
	Issue of Substation Equipment Specification Update 1 (TPS 18)	0d		16-Nov-06 A
	Traction Substation Electrical Design	55d	15-Nov-06 A	09-Feb-07 A
	Issue Site Specific Substation Single Line Diagrams	0d		09-Feb-07 A
	Issue Substation and Trackside Interface Demarcation Diagram (TPS 26)	0d		15-Nov-06 A
	Issue Schematic Diagram for DNO Derived LVAC Power Supplies (TPS 31)	0d		30-Jan-07 A
	Depot OLE / Plant Interlocking	0d	27-Feb-07 A	27-Feb-07 A
	Issue Energisation Warning and Interlocking Scheme (TPS 29)	0d		27-Feb-07 A
	Stray Current Management	1d	17-Nov-06 A	20-Nov-06 A
	Issue Updated Stray Current Management Strategy (TPS 34)	0d		17-Nov-06 A
	Issue Stray Current Code of Practice (TPS 7DD)	0d		20-Nov-06 A
	Stray Current	332d	23-Aug-07 A	10-Dec-08
	VO135 Detailed Design of Stray Current (Internal)	0d	23-Aug-07 A	23-Aug-07 A
	Issue SC COP, SC, CCA, SC RMS and SC TCP	0d		23-Aug-07 A
	VO230 SDS Support to Stray Current Working Party	195d	12-Mar-08	10-Dec-08
	Issue Stray Current Test Site Drawings for External Approval	0d		12-Mar-08

USB00000084_0002

Activity ID	Activity Name	Original Duration	Start	Finish
	Issue Stray Current Working Party Position Report for External Approval	0d		10-Dec-08
	Traction Power Systems	403d	04-Oct-06 A	09-May-08
	Issue Outline Project Specification (OPS) 'Traction Power Distribution' (TPS14)	0d		04-Oct-06 A
	Issue Risk Register Update Associated With TPS (TPS 15)	0d		15-Nov-06 A
	Final Issue of Systemwide Traction Power Design To tie	0d		09-May-08*
	Electro Magnetic Compatibility	119d	19-Jul-07 A	14-Jan-08
	Issue Network Rail Strategy & Management Plan to tie	0d		31-Aug-07 A
	Issue BAA Strategy & Management Plan to tie	0d		21-Sep-07 A
	Issue Forth Ports Strategy & Management Plan to tie	0d		21-Sep-07 A
	Issue BAA Interface Report to tie	0d		02-Nov-07 A
	Issue Forth Ports Interface Report to tie	0d		02-Nov-07 A
	Issue Utilities Interface Report to tie	0d		14-Jan-08
	Issue Cable Separation Specification To tie	0d		19-Jul-07 A
	OLE (Task200.7)	188d	17-Aug-07 A	16-May-08
	OLE General (Task200.7.1)	108d	17-Aug-07 A	25-Jan-08
	Issue Dynamic Simulation Report	0d		17-Jan-08
	Issue Final Technical & Pantograph Specifications	0d		17-Aug-07 A
	Issue Final Building Fixings Report	0d		07-Dec-07 A
	Issue Pole Schedule - Loading Chart	0d		25-Jan-08*
	Issue Design Commentary Report	0d		25-Jan-08*
	OLE Bases (Task200.7.2)	0d	16-May-08	16-May-08
	OLE Bases General	0d	16-May-08	16-May-08
	Issue OLE Base Design to tie	0d		16-May-08
	System Engineering	354d	17-Jul-07 A	03-Dec-08
	Requirements Test Specification	225d	24-Jan-08	03-Dec-08
	Issue Requirements Test Specification Ready To tie (second issue)	0d		03-Dec-08
	Issue Requirements Test Specification Ready To tie (first issue)	0d		24-Jan-08
	System Integration	345d	17-Jul-07 A	20-Nov-08
	Issue System Integration Plan To tie	0d		18-Jan-08*
	System Interface Register Baseline Ready to Issue To tie	0d		20-Nov-08
	Issue Edinburgh Tram Network Integration Plan (1st Submission) to tie	0d		17-Jul-07 A
	Issue Edinburgh Tram Network Integration Plan (2nd Submission) to tie	0d		18-Jan-08*
	Issue System Architecture Specification Plan to tie	0d		18-Jan-08*
	Issue System Interface Register Baseline To tie (1st Submmission)	0d		25-Jan-08*
	Verification and Validation	219d	18-Jan-08	20-Nov-08
	Detailed Design Verification and Validation Report	10d	05-Nov-08	20-Nov-08
	Issue Verification and Validation Plan to tie	0d		18-Jan-08
	Issue System Detailed Design Review Plan to tie	0d		18-Jan-08
	Requirements Database	213d	28-Jan-08	20-Nov-08
	Issue Requirements Database Baseline 3 To tie (second issue)	0d		20-Nov-08
	Issue Requirements Database Baseline 3 To tie (first issue)	0d		28-Jan-08
	Systems Assurance (100.5)	97d	23-Jan-08	06-Jun-08
	RAM	47d	23-Jan-08	28-Mar-08
	RAMP	38d	23-Jan-08	17-Mar-08
	Issue Reliability Availability Maintainability Plan to tie	0d		23-Jan-08*
	Final Detailed Design Stage Issue of Reliability Availability Maintainability Plan to tie	0d		17-Mar-08
	RAM Analysis	42d	29-Jan-08	27-Mar-08
	Issue RAM Analysis to tie	0d		29-Jan-08
	Final Detailed Design Stage Issue of RAM Analysis to tie	0d		27-Mar-08
	RDP	44d	28-Jan-08	28-Mar-08
	Issue RDP to tie	0d		28-Jan-08
	Final Detailed Design Stage Issue of RDP to tie	0d		28-Mar-08
	System Safety	97d	23-Jan-08	06-Jun-08
	SSMP	52d	23-Jan-08	04-Apr-08
	Issue System Safety Management Plan to tie	0d		23-Jan-08*
	Final DD Stage Issue of System Safety Management Plan to tie	0d		04-Apr-08
	Safety Analysis	51d	28-Jan-08	08-Apr-08
	Issue Safety Analysis to tie	0d		28-Jan-08
	Final DD Stage Issue of Safety Analysis to tie	0d		08-Apr-08
	Hazard log	64d	28-Jan-08	25-Apr-08
	Issue Hazard Log Report to tie	0d		28-Jan-08
	Final DD stage issue of HL report to tie	0d		25-Apr-08
	DDCS	52d	26-Mar-08	06-Jun-08
	Issue Detailed Design Case For Safety to tie	0d		26-Mar-08
	Final Detailed Design stage issue of DDCS to tie	0d		06-Jun-08
	Issue Detailed Design Case For Safety to PSCC	0d		28-May-08
	VO102 Review of Employers Requirements With SDS Technical Specifications CNS030	0d	19-Feb-07 A	19-Feb-07 A
	Issue Employers Requirements Review Document to tie	0d		19-Feb-07 A
	Haymarket to Newhaven Road - Section 1 (Task300)	580d	18-Aug-06 A	26-Nov-08
	Section Wide - Section 1	0d	30-Nov-07 A	30-Nov-07 A
	Section Wide	0d	30-Nov-07 A	30-Nov-07 A
	OLE (Task300.1)	0d	30-Nov-07 A	30-Nov-07 A
	Issue Notification Of Completion Letter-Final Detailed Layout Plans & Standard & Special Cross Sections to tie Sec1	0d		30-Nov-07 A
	FOW - NER - Section 1A (Task300.2)	566d	07-Sep-06 A	26-Nov-08
	Sub Section Wide	482d	12-Jan-07 A	26-Nov-08
	Sub Section Wide IDC	18d	31-Mar-08	23-Apr-08

Activity ID	Activity Name	Original Duration	Start	Finish
	Subsection Wide IDC	17d	31-Mar-08	23-Apr-08
	Consents & Approvals	382d	31-May-07 A	26-Nov-08
	Prior Approvals	342d	31-May-07 A	02-Oct-08
	Combined Section Prior Approval	60d	10-Jul-08	02-Oct-08
	Receive Combined Package 1A Comments From CEC	0d		04-Sep-08
	Prior Approval Granted for Section 1A Combined Package	0d		02-Oct-08
	Issue Combined Package 1A for Prior Approval to CEC	0d		10-Jul-08
	CEC Approval Period - 1A Combined Package	38d	10-Jul-08	04-Sep-08
	Update 1A Combined Package to CEC Comments	19d	04-Sep-08	02-Oct-08
	Batch 1/01	40d	19-Jun-08	14-Aug-08
	Issue Batch 1/01 For Approval to CEC	0d	19-Jun-08	
	Batch 1/01 Formal Approval Period	38d	19-Jun-08	13-Aug-08
	Receive CEC Prior Approval For Batch 1/01	0d	14-Aug-08	
	Batch 1/02	43d	14-Mar-08	14-May-08
	Batch 1/02 Formal Approval Period	38d	14-Mar-08	13-May-08
	Issue Batch 1/02 For Approval to CEC	0d	14-Mar-08	
	Receive CEC Prior Approval For Batch 1/02	0d	14-May-08	
	Batch 1/03 Tram North Leith Sands Substation	29d	31-May-07 A	11-Jul-07 A
	Issue Tram North Leith Sands Substation Design for Prior Approval	0d		31-May-07 A
	Prior Approval For Tram North Leith Sands Substation	0d		11-Jul-07 A
	Receive Tram North Leith Sands Substation CEC Comments (No Comments)	0d		11-Jul-07 A
	Batch 1/03 Formal Approval Period	27d	01-Jun-07 A	11-Jul-07 A
	Incorporate Tram North Leith Sands Substation CEC Comments for Prior Approval (No Comments)	1d	11-Jul-07 A	11-Jul-07 A
	Batch 1/04	41d	10-Jul-08	05-Sep-08
	Batch 1/04 Formal Approval Period	38d	10-Jul-08	04-Sep-08
	Issue Batch 1/04 For Approval to CEC	0d	10-Jul-08	
	Receive CEC Prior Approval For Batch 1/04	0d	05-Sep-08	
	Batch 1/05	40d	03-Jun-08	29-Jul-08
	Batch 1/05 Formal Approval Period	38d	03-Jun-08	28-Jul-08
	Issue Batch 1/05 For Approval to CEC	0d	03-Jun-08	
	Receive CEC Prior Approval For Batch 1/05	0d	29-Jul-08	
	Batch 1/06	42d	04-Feb-08	02-Apr-08
	Batch 1/06 Formal Approval Period	38d	04-Feb-08	01-Apr-08
	Issue Batch 1/06 For Approval to CEC	0d	04-Feb-08	
	Receive CEC Prior Approval For Batch 1/06	0d	02-Apr-08	
	Batch 1/07	42d	30-Jan-08	28-Mar-08
	Batch 1/07 Formal Approval Period	38d	30-Jan-08	27-Mar-08
	Issue Batch 1/07 For Approval to CEC	0d	30-Jan-08	
	Receive CEC Prior Approval For Batch 1/07	0d	28-Mar-08	
	Batch 1/08	42d	08-Feb-08	08-Apr-08
	Batch 1/08 Formal Approval Period	38d	08-Feb-08	07-Apr-08
	Issue Batch 1/08 For Approval to CEC	0d	08-Feb-08	
	Receive CEC Prior Approval For Batch 1/08	0d	08-Apr-08	
	Roads, Track, OLE, Landscaping, Street Lighting	153d	20-Aug-07 A	28-Mar-08
	Informal Consultation With CEC & tie Over Prior Approval for Roads, Track, OLE, Landscaping and Street Lighting	142d	20-Aug-07 A	28-Mar-08
	Tram Stop Bernard Street	103d	20-Aug-07 A	18-Jan-08
	Informal Consultation With CEC & tie over Prior Approval for Tram Stop Bernard Street	97d	20-Aug-07 A	18-Jan-08
	Tram Stop Port Of Leith	102d	27-Aug-07 A	25-Jan-08
	Informal Consultation With CEC & tie over Prior Approval Tram Stop Port Of Leith	97d	27-Aug-07 A	25-Jan-08
	Tram Stop Ocean Terminal	40d	04-Feb-08	28-Mar-08
	Informal Consultation With CEC & tie over Prior Approval Tram Stop Ocean Terminal	38d	04-Feb-08	28-Mar-08
	Tram Stop Newhaven	40d	14-Jan-08	07-Mar-08
	Informal Consultation With CEC & tie over Prior Approval Tram Stop Newhaven	38d	14-Jan-08	07-Mar-08
	Lindsay Road Retaining Wall Structure	40d	23-May-08	17-Jul-08
	Commence Lindsay Road RW Informal Consultation With CEC & tie Over Prior Approval	37d	23-May-08	17-Jul-08
	Tram Stop Foot of the Walk	113d	27-Aug-07 A	11-Feb-08
	Informal Consultation With CEC & tie over Prior Approval Tram Stop Foot of the Walk	107d	27-Aug-07 A	11-Feb-08
	Technical Approvals	195d	28-Feb-08	26-Nov-08
	Victoria Dock (TAA)	90d	19-Jun-08	22-Oct-08
	Issue Victoria Dock Design Package to TAA	0d		13-Aug-08
	TAA Victoria Dock Design Package Review Period	38d	14-Aug-08	08-Oct-08
	Receive Victoria Dock Design Package Comments from TAA	0d		08-Oct-08
	Incorporate TAA Comments into Victoria Dock Design Package	9d	09-Oct-08	22-Oct-08
	Commence Victoria Dock Informal Consultation With CEC Over Technical Approval	38d	19-Jun-08	13-Aug-08
	Tower Place Bridge Review Period (TAA)	90d	24-Jul-08	26-Nov-08
	Issue Tower Place Bridge Superstructure Design Package to TAA	0d		17-Sep-08
	TAA Tower Place Bridge Superstructure Design Package Review Period	38d	18-Sep-08	12-Nov-08
	Receive Tower Place Bridge Superstructure Design Package Comments from TAA	0d		12-Nov-08
	Incorporate TAA Comments into Tower Place Bridge Superstructure Design Package	9d	13-Nov-08	26-Nov-08
	Commence Tower Place Bridge Superstructure Informal Consultation With CEC Over Technical Approval	38d	24-Jul-08	17-Sep-08
	Lindsay Road Retaining Wall Structure Review Period (TAA)	94d	22-May-08	30-Sep-08
	Issue Lindsay Road RW Design Package to TAA	0d		17-Jul-08
	TAA Lindsay Road RW Design Package Review Period	39d	18-Jul-08	15-Sep-08
	Receive Lindsay Road RW Design Package Comments from TAA	0d		15-Sep-08
	Incorporate TAA Comments into Lindsay Road RW Design Package	10d	16-Sep-08	30-Sep-08
	Commence Lindsay Road RW Informal Consultation With CEC Over Technical Approval	38d	22-May-08	17-Jul-08

USB00000084_0004

Activity ID	Activity Name	Original Duration	Start	Finish
	Roads inc Drainage Technical Approval	104d	28-Feb-08	22-Jul-08
	Roads Authority Informal Consultation	38d	28-Feb-08	25-Apr-08
	Issue Roads Design to Roads Authority for Approval	0d		25-Apr-08
	Roads Authority Approval Period	38d	28-Apr-08	24-Jun-08
	Receive Roads Authority Comments	0d		24-Jun-08
	Update to Roads Authority Comments	19d	25-Jun-08	22-Jul-08
	Roads Technical Approval Granted	0d		22-Jul-08
	Track (Task300.2.1)	0d	25-Jan-08	25-Jan-08
	Issue Notification Of Completion Letter - Track Alignment Design to tie Section 1A	0d		25-Jan-08
	Roads, Street Lighting & Landscaping SubSections 1A1 & 1A2 (Task300.2.2)	50d	18-Jan-08	28-Mar-08
	Issue Notification Of Completion Letter- Roads Design to tie for Approval Section 1A1 & 1A2	0d		18-Jan-08
	Issue Notification Of Completion Letter- Hard & Soft Landscaping Design to tie Section 1A1 & 1A2	0d		28-Mar-08
	Issue Notification Of Completion Letter- Street Lighting Design (Inc. Any OLE Combined Pole) to tie Section 1A1 & 1A2	0d		28-Feb-08
	VO253 - Subsection 1A4 - Lindsay Road Detailed Design (Not Approved)	0d	28-Jan-08	28-Jan-08
	VO253 Subsection 1A4 - Roads	0d	28-Jan-08	28-Jan-08
	Issue Notification Of Completion Letter- Roads Design to tie for Approval Section 1A4	0d		28-Jan-08
	Issue Notification Of Completion Letter- Hard & Soft Landscaping Design to tie Section 1A4	0d		28-Jan-08
	Issue Notification Of Completion Letter- Street Lighting Design (Inc. Any OLE Combined Pole Design) to tie Section 1A4	0d		28-Jan-08
	VO252 - Subsection 1A3 - Ocean Terminal Detailed Design (Not Approved)	0d	15-Feb-08	15-Feb-08
	VO252 Subsection 1A3 - Roads	0d	15-Feb-08	15-Feb-08
	Issue Notification Of Completion Letter- Roads Design to tie for Approval Section 1A3	0d		15-Feb-08
	Issue Notification Of Completion Letter- Hard & Soft Landscaping Design to tie Section 1A3	0d		15-Feb-08
	Issue Notification Of Completion Letter- Street Lighting Design (Inc. Any OLE Combined Pole Design) to tie Section 1A3	0d		15-Feb-08
	Drainage	0d	18-Jan-08	18-Jan-08
	Issue Drainage Design Completion Letter to tie for Approval Section 1A	0d		18-Jan-08
	Boundary & Accomodation Works (Task300.2.4)	0d	14-Sep-07 A	14-Sep-07 A
	Issue Notification Of Completion Letter- Detailed Design of Boundary & Accomodation Works Section 1A	0d		14-Sep-07 A
	Utilities Section 1A1 (Excludes Constitution Street) Plates 13 to 15	117d	12-Jan-07 A	25-Jun-07 A
	SUCs Approval	99d	12-Jan-07 A	14-Jun-07 A
	Incorporate Comments and Compile IFC Drawings Section 1A1	8d	14-Jun-07 A	25-Jun-07 A
	Issue First Draft IFC to tie Section 1A1	0d		25-Jun-07 A
	FOW - COS	340d	07-Sep-06 A	28-Jan-08
	Tram Stop Foot of the Walk (Task300.3.10)	230d	02-Mar-07 A	28-Jan-08
	Issue Notification Of Completion Letter- Foot Of The Walk Tram Stop Design to tie	0d		28-Jan-08*
	Site Visit with tie & CEC To Review Preliminary Design	1d	02-Mar-07 A	02-Mar-07 A
	Tram Stop Bernard Street (Task300.2.8)	310d	07-Sep-06 A	23-Nov-07 A
	Issue Notification Of Completion Letter- Bernard Street Tram Stop Design to tie	0d		23-Nov-07 A
	Site Visit To Review Preliminary Design	1d	07-Sep-06 A	07-Sep-06 A
	COS - OCD	233d	26-Feb-07 A	25-Jan-08
	Tram Stop Port of Leith (Task300.2.9)	233d	26-Feb-07 A	25-Jan-08
	Issue Notification Of Completion Letter- Port Of Leith Tram Stop Design to tie	0d		25-Jan-08
	Site Visit with tie & CEC To Review Preliminary Design	1d	26-Feb-07 A	26-Feb-07 A
	OCD - OCT	397d	02-Mar-07 A	17-Sep-08
	Tram Stop Ocean Terminal (Task300.2.10)	274d	02-Mar-07 A	28-Mar-08
	Issue Notification Of Completion Letter- Ocean Terminal Tram Stop Design to tie	0d		28-Mar-08
	Site Visit with tie & CEC To Review Preliminary Design	1d	02-Mar-07 A	02-Mar-07 A
	Structures	150d	20-Feb-08	17-Sep-08
	S16 Victoria Dock Entrance Bridge	125d	20-Feb-08	13-Aug-08
	Issue Victoria Dock Entrance Bridge AIP to tie	0d		20-Feb-08
	Issue Victoria Dock Entrance Bridge AIP to CEC	0d		20-Feb-08
	Issue Victoria Dock Entrance Bridge AIP to TAA	0d		20-Feb-08
	TAA Approval Period	38d	21-Feb-08	16-Apr-08
	Victoria Dock Superstructure Detailed Design	50d	04-Jun-08	13-Aug-08
	Issue Superstructure Detailed Design Package to CAT II Checker	0d		04-Jun-08
	Superstructure CAT II Check	28d	05-Jun-08	16-Jul-08
	Receive and Incoporate CAT II Comments	9d	17-Jul-08	30-Jul-08
	Issue Notification Of Completion Letter- Victoria Dock Superstructure Design Package to tie	0d		13-Aug-08
	Victoria Dock Substructure Detailed Design	70d	07-May-08	13-Aug-08
	Issue Substructure Detailed Design Package to CAT II Checker	0d		07-May-08
	Substructure CAT II Check	28d	08-May-08	18-Jun-08
	Receive and Incorporate CAT II Comments	9d	19-Jun-08	02-Jul-08
	Issue Notification Of Completion Letter- Victoria Dock Substructure Detailed Design Package to tie	0d		13-Aug-08
	S17 Tower Place Bridge	150d	20-Feb-08	17-Sep-08
	Issue Victoria Dock Entrance Bridge AIP to tie	0d		20-Feb-08
	Issue Victoria Dock Entrance Bridge AIP to CEC	0d		20-Feb-08
	Issue Victoria Dock Entrance Bridge AIP to TAA	0d		20-Feb-08
	TAA Approval Period	38d	21-Feb-08	16-Apr-08
	Tower Place Bridge Superstructure Detailed Design	50d	09-Jul-08	17-Sep-08
	Issue Superstructure Detailed Design Package to CAT II Checker	0d		09-Jul-08
	Superstructure CAT II Check	28d	10-Jul-08	20-Aug-08
	Receive and Incoporate CAT II Comments	9d	21-Aug-08	03-Sep-08
	Issue Notification Of Completion Letter- Tower Place Bridge Superstructure Design Package to tie	0d		17-Sep-08
	Tower Place Bridge Substructure Detailed Design	60d	25-Jun-08	17-Sep-08
	Issue Substructure Detailed Design Package to CAT II Checker	0d		25-Jun-08
	Substructure CAT II Check	28d	26-Jun-08	06-Aug-08
	Receive and Incorporate CAT II Comments	9d	07-Aug-08	20-Aug-08

USB00000084_0005

Activity ID	Activity Name	Original Duration	Start	Finish
	Issue Notification Of Completion Letter- Tower Place Bridge Substructure Detailed Design Package to tie	0d		17-Sep-08
	OCT - NER	358d	22-Feb-07 A	17-Jul-08
	Tram Stop Newhaven (Task300.2.11)	234d	02-Mar-07 A	01-Feb-08
	Issue Notification Of Completion Letter- Newhaven Tram Stop Design to tie	0d		01-Feb-08
	Site Visit with tie & CEC To Review Preliminary Design	1d	02-Mar-07 A	02-Mar-07 A
	Structures	110d	14-Feb-08	17-Jul-08
	W01 Lindsay Road Retaining Wall	110d	14-Feb-08	17-Jul-08
	Issue Lindsay Road Retaininng Wall AIP to tie	0d		14-Feb-08
	Issue Lindsay Road Retaininng Wall AIP to CEC	0d		14-Feb-08
	Issue Lindsay Road Retaininng Wall AIP to TAA	0d		14-Feb-08
	TAA Approval Period	38d	15-Feb-08	10-Apr-08
	Lindsay Road Retaining Wall Structure Detailed Design	50d	08-May-08	17-Jul-08
	Issue Structure Detailed Design Package to CAT I Checker	0d		08-May-08
	Structure CAT I Check	28d	09-May-08	19-Jun-08
	Receive and Incoporate CAT I Comments	9d	20-Jun-08	03-Jul-08
	Issue Notification Of Completion Letter- Lindsay Road Structure Design Package to tie	0d		17-Jul-08
	Tram North Leith Sands Substation (Task300.2.12)	25d	22-Feb-07 A	29-Mar-07 A
	Issue Tram North Leith Sands Substation Planning Submission To tie For Approval	0d		22-Feb-07 A
	tie Approval Period For Planning Submission	19d	23-Feb-07 A	22-Mar-07 A
	Receive tie Comments	0d		16-Mar-07 A
	Update Substation Planning Submission To Incorporate tie Comments	9d	16-Mar-07 A	29-Mar-07 A
	MDR - FOW - Section 1B (Task300.3)	424d	12-Sep-06 A	15-May-08
	Sub Section Wide	424d	12-Sep-06 A	15-May-08
	Sub Section Wide IDC	39d	03-Dec-07 A	04-Feb-08
	Subsection Wide IDC - Roads, Track, Stops, B&A, Street Lighting, Utilities	38d	03-Dec-07 A	04-Feb-08
	Consents & Approvals	320d	14-Feb-07 A	15-May-08
	Prior Approvals	176d	16-Aug-07 A	28-Apr-08
	Combined Section Prior Approval	60d	04-Feb-08	28-Apr-08
	Issue Combined Package 1B for Prior Approval to CEC	0d		04-Feb-08
	Receive Combined Package 1B Comments From CEC	0d		31-Mar-08
	Prior Approval Granted for Section 1B Combined Package	0d		28-Apr-08
	CEC Approval Period - 1B Combined Package	38d	05-Feb-08	31-Mar-08
	Update 1B Combined Package to CEC Comments	19d	01-Apr-08	28-Apr-08
	Batch 1/09	40d	18-Jan-08	14-Mar-08
	Batch 1/09 Formal Approval Period	38d	18-Jan-08	13-Mar-08
	Issue Batch 1/09 For Approval to CEC	0d	18-Jan-08	
	Receive CEC Prior Approval For Batch 1/09	0d	14-Mar-08	
	Batch 1/10 Tram Leith Walk 163 Substation	99d	16-Aug-07 A	10-Jan-08 A
	Issue Tram Leith Walk 163 Substation Design for Prior Approval	0d		14-Nov-07 A
	Prior Approval For Tram Leith Walk 163 Substation	0d		10-Jan-08 A
	Informal Consultation With CEC & tie over Prior Approval For Tram Leith Walk 163 Substation	60d	16-Aug-07 A	14-Nov-07 A
	Tram Leith Walk 163 Substation CEC Approval Period	33d	14-Nov-07 A	09-Jan-08 A
	Roads, Track, OLE, Landscaping, Street Lighting	93d	27-Aug-07 A	14-Jan-08
	Informal Consultation With CEC & tie Over Prior Approval for Roads, Track, OLE, Landscaping and Street Lighting	88d	27-Aug-07 A	14-Jan-08
	Tram Stop Balfour Street	55d	27-Aug-07 A	12-Nov-07 A
	Informal Consultation With CEC & tie over Prior Approval Tram Stop Balfour Street	52d	27-Aug-07 A	12-Nov-07 A
	Technical Approvals	320d	14-Feb-07 A	15-May-08
	Leith Walk Rail Bridge Assessment Review Period (TAA)	78d	14-Feb-07 A	01-Jun-07 A
	Issue Leith Walk Rail Bridge Assessment Report to TAA	0d		04-Apr-07 A
	TAA Leith Walk Rail Bridge Assessment Report Review Period	24d	05-Apr-07 A	15-May-07 A
	Receive Leith Walk Rail Bridge Assessment Report Comments from TAA	0d		15-May-07 A
	Incorporate TAA Comments into Leith Walk Rail Bridge Assessment Report	11d	16-May-07 A	01-Jun-07 A
	Commence Leith Walk Rail Bridge Informal Consultation With CEC Over Technical Approval	34d	14-Feb-07 A	04-Apr-07 A
	Leith Walk Rail Bridge Assessment Review Period (Network Rail)	80d	01-Jun-07 A	20-Sep-07 A
	Issue Design and Check Certificate to Network Rail For Comment	0d		01-Jun-07 A
	Network Rail Comment Period	19d	01-Jun-07 A	28-Jun-07 A
	NR COMMENTS NOT RECEIVED	0d		20-Sep-07 A
	Roads inc Drainage Technical Approval	122d	19-Nov-07 A	15-May-08
	Issue Roads Design to Roads Authority for Approval	0d		18-Feb-08
	Roads Authority Approval Period	38d	19-Feb-08	16-Apr-08
	Receive Roads Authority Comments	0d		16-Apr-08
	Update to Roads Authority Comments	19d	17-Apr-08	15-May-08
	Roads Authority Informal Consultation	56d	19-Nov-07 A	18-Feb-08
	Roads Technical Approval Granted	0d		15-May-08
	VO26 Charette Changes Leith Walk CNB014	61d	12-Sep-06 A	06-Dec-06 A
	Optioneering	0d	12-Sep-06 A	12-Sep-06 A
	2-Hour Meeting With CEC	0d	12-Sep-06 A	
	Feasibility (2 Designs)	5d	26-Sep-06 A	03-Oct-06 A
	2-Hour Meeting With CEC - Update	0d	26-Sep-06 A	
	With CEC For Approval	0d	03-Oct-06 A	
	Preliminary Design (1 Design)	13d	17-Nov-06 A	06-Dec-06 A
	2-Hour Meeting With CEC - Update (Not Required)	0d	17-Nov-06 A	
	4-hour Meeting With CEC for Approval	0d	06-Dec-06 A	
	VO27 Charette Changes Foot of Walk CNB015	39d	25-Sep-06 A	17-Nov-06 A
	Optioneering	0d	25-Sep-06 A	25-Sep-06 A
	2-Hour Meeting With CEC	0d	25-Sep-06 A	

Activity ID	Activity Name	Original Duration	Start	Finish
	Feasibility (2 Designs)	5d	26-Sep-06 A	03-Oct-06 A
	2-Hour Meeting With CEC - Update	0d	26-Sep-06 A	
	With CEC For Approval	0d	03-Oct-06 A	
	Preliminary Design (1 Design)	0d	17-Nov-06 A	17-Nov-06 A
	2-Hour Meeting With CEC - Update (Not Required)	0d	17-Nov-06 A	
	Track (Task300.3.1)	0d	31-Aug-07 A	31-Aug-07 A
	Issue Notification Of Completion Letter- Track Alignment Design to tie Section 1B	0d		31-Aug-07 A
	Roads, Street Lighting & Landscaping (Task300.3.2)	4d	05-Nov-07 A	09-Nov-07 A
	Issue Notification Of Completion Letter- Roads Design to tie for Approval Section 1B	0d		05-Nov-07 A
	Issue Notification Of Completion Letter- Hard & Soft Landscaping Design to tie Section 1B	0d		09-Nov-07 A
	Issue Notification Of Completion Letter- Street Lighting Design (Inc. Any OLE Combined Pole Design) to tie Section 1B	0d		09-Nov-07 A
	Drainage	0d	07-Nov-07 A	07-Nov-07 A
	Issue Drainage Design Completion Letter to tie for Approval Section 1B INCLUDED IN ROADS SUBMISSION	0d		07-Nov-07 A
	Boundary & Accomodation Works (Task300.3.4)	0d	14-Sep-07 A	14-Sep-07 A
	Issue Notification Of Completion Letter- Detailed Design of Boundary & Accomodation Works Section 1B	0d		14-Sep-07 A
	Utilities Plates 22 to 31	123d	06-Feb-07 A	26-Jul-07 A
	Issue to SUCs	0d		06-Feb-07 A
	SUCs Approval	112d	06-Feb-07 A	26-Jul-07 A
	MDR - BAS	220d	09-Jan-07 A	13-Nov-07 A
	Tram Stop Balfour Street (Task300.3.8)	183d	02-Mar-07 A	13-Nov-07 A
	Issue Notification Of Completion Letter- Balfour Street Tram Stop Design to tie	0d		13-Nov-07 A
	Site Visit with tie & CEC To Review Preliminary Design	1d	02-Mar-07 A	02-Mar-07 A
	Structures	48d	09-Jan-07 A	16-Mar-07 A
	S18 - Leith Walk Railway Bridge (Task300.3.9)	48d	09-Jan-07 A	16-Mar-07 A
	Leith Walk Rail Bridge Structure Assessment	48d	09-Jan-07 A	16-Mar-07 A
	Issue Structure Assessment Package to CAT I Checker	0d		09-Jan-07 A
	Structure Assessment Package CAT I Check	31d	10-Jan-07 A	23-Feb-07 A
	Receive and Incoporate CAT I Comments	5d	26-Feb-07 A	02-Mar-07 A
	Issue Leith Walk Rail Bridge Assessment Report to tie (NOT REQ. DIRECT TO CEC)	0d		16-Mar-07 A
	BAS - FOW	0d	01-Oct-07 A	01-Oct-07 A
	Tram Leith Walk 163 Substation (Task300.3.11)	0d	01-Oct-07 A	01-Oct-07 A
	Issue Notification Of Completion Letter- Tram Leith Walk 163 Substation Planning Submission to tie for Approval	0d		01-Oct-07 A
	PSW - MDR - Section 1C (Task300.4)	451d	18-Aug-06 A	29-May-08
	Sub Section Wide	451d	18-Aug-06 A	29-May-08
	Sub Section Wide IDC	20d	04-Feb-08	29-Feb-08
	Subsection Wide IDC	19d	04-Feb-08	29-Feb-08
	Consents & Approvals	237d	25-Jun-07 A	29-May-08
	Prior Approvals	228d	25-Jun-07 A	19-May-08
	Combined Section Prior Approval	60d	25-Feb-08	19-May-08
	Issue Combined Package 1C for Prior Approval to CEC	0d		25-Feb-08
	Receive Combined Package 1C Comments From CEC	0d		21-Apr-08
	Prior Approval Granted for Section 1C Combined Package	0d		19-May-08
	CEC Approval Period - 1C Combined Package	38d	25-Feb-08	21-Apr-08
	Update 1C Combined Package to CEC Comments	19d	21-Apr-08	19-May-08
	Batch 1/11	40d	18-Jan-08	14-Mar-08
	Batch 1/11 Formal Approval Period	38d	18-Jan-08	13-Mar-08
	Issue Batch 1/11 For Approval to CEC	0d	18-Jan-08	
	Receive CEC Prior Approval For Batch 1/11	0d	14-Mar-08	
	Batch 1/12	42d	25-Feb-08	23-Apr-08
	Batch 1/12 Formal Approval Period	38d	25-Feb-08	22-Apr-08
	Issue Batch 1/12 For Approval to CEC	0d	25-Feb-08	
	Receive CEC Prior Approval For Batch 1/12	0d	23-Apr-08	
	Batch 1/13	42d	11-Feb-08	09-Apr-08
	Batch 1/13 Formal Approval Period	38d	11-Feb-08	08-Apr-08
	Issue Batch 1/13 For Approval to CEC	0d	11-Feb-08	
	Receive CEC Prior Approval For Batch 1/13	0d	09-Apr-08	
	Batch 1/14 Tram Cathedral Lane Substation	91d	25-Jun-07 A	29-Oct-07 A
	Issue Tram Catherdral Lane Substation Design To CEC For Planning Permission	0d		17-Aug-07 A
	Planning Permission Granted For Tram Cathedral Lane Substation	0d		29-Oct-07 A
	Informal Consultation With CEC & tie Over Planning Permission Tram Catherdral Lane Substation	38d	25-Jun-07 A	17-Aug-07 A
	Batch 1/14 Formal Approval Period	48d	17-Aug-07 A	29-Oct-07 A
	Batch 1/15	42d	30-Jan-08	28-Mar-08
	Batch 1/15 Formal Approval Period	38d	30-Jan-08	27-Mar-08
	Issue Batch 1/15 For Approval to CEC	0d	30-Jan-08	
	Receive CEC Prior Approval For Batch 1/15	0d	28-Mar-08	
	Roads, Track, OLE, Landscaping, Street Lighting	93d	27-Aug-07 A	14-Jan-08
	Informal Consultation With CEC & tie Over Prior Approval for Roads, Track, OLE, Landscaping and Street Lighting	88d	27-Aug-07 A	14-Jan-08
	Tram Stop Picardy Place	40d	14-Jan-08	07-Mar-08
	Informal Consultation With CEC & tie over Prior Approval Tram stop Piccardy Place	38d	14-Jan-08	07-Mar-08
	Tram Stop St. Andrew Square	40d	14-Jan-08	07-Mar-08
	Informal Consultation With CEC & tie over Prior Approval Tram Stop St Andrew Square	38d	14-Jan-08	07-Mar-08
	Tram Stop McDonald Road	55d	27-Aug-07 A	12-Nov-07 A
	Informal Consultation With CEC & tie over Prior Approval Tram Stop MacDonald Road	52d	27-Aug-07 A	12-Nov-07 A
	Technical Approvals	127d	26-Nov-07 A	29-May-08
	Roads inc Drainage Technical Approval	127d	26-Nov-07 A	29-May-08
	Issue Roads Design to Roads Authority for Approval	0d		29-Feb-08

USB00000084_0007

Activity ID	Activity Name	Original Duration	Start	Finish
	Roads Authority Approval Period	38d	03-Mar-08	29-Apr-08
	Receive Roads Authority Comments	0d		29-Apr-08
	Update to Roads Authority Comments	19d	30-Apr-08	29-May-08
	Roads Authority Informal Consultation	60d	26-Nov-07 A	29-Feb-08
	Roads Technical Approval Granted	0d		29-May-08
	VO22 Charette Changes St Andrew Square CNB010	78d	18-Aug-06 A	06-Dec-06 A
	Optioneering	0d	18-Aug-06 A	18-Aug-06 A
	2-Hour Meeting With CEC	0d	18-Aug-06 A	
	Feasibility (2 Designs)	4d	26-Sep-06 A	02-Oct-06 A
	2-Hour Meeting With CEC - Update	0d	26-Sep-06 A	
	With CEC For Approval	0d	02-Oct-06 A	
	Preliminary Design (1 Design)	17d	13-Nov-06 A	06-Dec-06 A
	2-Hour Meeting With CEC - Update (Not Required)	0d	13-Nov-06 A	
	4-hour Meeting With CEC for Approval	0d	06-Dec-06 A	
	VO24 Charette Changes Princes Street CNB012	26d	25-Sep-06 A	31-Oct-06 A
	Optioneering	0d	25-Sep-06 A	25-Sep-06 A
	2-Hour Meeting With CEC	0d	25-Sep-06 A	
	Feasibility (2 Designs)	1d	25-Sep-06 A	26-Sep-06 A
	2-Hour Meeting With CEC - Update	0d	26-Sep-06 A	
	With CEC For Approval	0d	25-Sep-06 A	
	Preliminary Design (1 Design)	0d	31-Oct-06 A	31-Oct-06 A
	2-Hour Meeting With CEC - Update (Not Required)	0d	31-Oct-06 A	
	VO25 Charette Changes Picardy Place CNB013	61d	12-Sep-06 A	06-Dec-06 A
	Optioneering	0d	12-Sep-06 A	12-Sep-06 A
	2-Hour Meeting With CEC	0d	12-Sep-06 A	
	Feasibility (2 Designs)	5d	13-Sep-06 A	20-Sep-06 A
	2-Hour Meeting With CEC - Update	0d	13-Sep-06 A	
	With CEC For Approval	0d	20-Sep-06 A	
	Preliminary Design (1 Design)	13d	17-Nov-06 A	06-Dec-06 A
	2-Hour Meeting With CEC - Update (Not Required)	0d	17-Nov-06 A	
	4-hour Meeting With CEC for Approval	0d	06-Dec-06 A	
	Track (Task300.4.1)	0d	09-Nov-07 A	09-Nov-07 A
	Issue Notification Of Completion Letter- Track Alignment Design to tie Section 1C	0d		09-Nov-07 A
	Roads, Street Lighting & Landscaping (Task300.4.2)	56d	14-Nov-07 A	11-Feb-08
	Issue Notification Of Completion Letter- Roads Design to tie for Approval Section 1C	0d		19-Dec-07 A
	Issue Notification Of Completion Letter- Hard & Soft Landscaping Design to tie Section 1C	0d		11-Feb-08
	Issue Notification Of Completion Letter- Street Lighting Design (Inc. Any OLE Combined Pole Design) to tie Section 1C	0d		08-Jan-08 A
	Issue Notification Of Completion Letter- Roads Design to tie for Approval Section 1C (Part Submission Only)	0d		14-Nov-07 A
	Drainage	0d	19-Dec-07 A	19-Dec-07 A
	Issue Drainage Design Completion Letter to tie for Approval Section 1C ISSUED WITH ROADS	0d		19-Dec-07 A
	Boundary & Accomodation Works (Task300.4.4)	0d	14-Sep-07 A	14-Sep-07 A
	Issue Notification Of Completion Letter- Detailed Design of Boundary & Accomodation Works Section 1C	0d		14-Sep-07 A
	Utilities Section 1C1 (Excludes St.A Sq & Yk Place) Plates 32 to 38	142d	08-Feb-07 A	27-Aug-07 A
	Issue to SUCs	0d		08-Feb-07 A
	SUCs Approval	129d	08-Feb-07 A	27-Aug-07 A
	Utilities Section 1C2 (St.A Sq & Yk Place) Plates 39 to 46	41d	29-Jun-07 A	27-Aug-07 A
	Issue to SUCs	0d		29-Jun-07 A
	SUCs Approval	38d	29-Jun-07 A	27-Aug-07 A
	PSW - SAS	123d	06-Aug-07 A	01-Feb-08
	Tram Stop St. Andrew Square (Task300.4.8)	123d	06-Aug-07 A	01-Feb-08
	Issue Notification Of Completion Letter- St Andrews Square Tram Stop Design to tie	0d		01-Feb-08
	Site Visit with tie & CEC To Review Preliminary Design	1d	06-Aug-07 A	06-Aug-07 A
	SAS - PIP	144d	02-Jul-07 A	28-Jan-08
	Tram Stop Picardy Place (Task300.4.9)	144d	02-Jul-07 A	28-Jan-08
	Issue Notification Of Completion Letter- Picardy Place Tram Stop Design to tie	0d		28-Jan-08
	Site Visit with tie & CEC To Review Preliminary Design	1d	02-Jul-07 A	02-Jul-07 A
	Tram Cathedral Lane Substation(Task300.4.10)	112d	12-Jul-07 A	17-Dec-07 A
	Issue Notification Of Completion Letter- Tram Cathedral Lane Substation Planning Submission to tie for Approval	0d		12-Jul-07 A
	Issue Notification Of Completion Letter- Tram Cathedral Lane Substation Detailed Engineering Drawings To tie	0d		17-Dec-07 A
	PIP - MDR	96d	02-Jul-07 A	12-Nov-07 A
	Tram Stop McDonald Road (Task300.4.11)	96d	02-Jul-07 A	12-Nov-07 A
	Issue Notification Of Completion Letter- McDonald Road Tram Stop Design to tie	0d		12-Nov-07 A
	Site Visit with tie & CEC To Review Preliminary Design	1d	02-Jul-07 A	02-Jul-07 A
	HAY - PSW - Section 1D (Task300.5)	437d	30-Aug-06 A	21-May-08
	Sub Section Wide	419d	25-Sep-06 A	21-May-08
	Sub Section Wide IDC	43d	03-Dec-07 A	08-Feb-08
	Subsection Wide IDC	41d	03-Dec-07 A	08-Feb-08
	Consents & Approvals	185d	27-Aug-07 A	21-May-08
	Prior Approvals	168d	27-Aug-07 A	29-Apr-08
	Combined Section Prior Approval	40d	29-Feb-08	25-Apr-08
	Issue Combined Package 1D for Prior Approval to CEC	0d		29-Feb-08
	Receive Combined Package 1D Comments From CEC	0d		25-Apr-08
	Prior Approval Granted for Section 1D Combined Package	0d		25-Apr-08
	CEC Approval Period - 1D Combined Package	38d	29-Feb-08	25-Apr-08
	Batch 1/16	42d	29-Feb-08	29-Apr-08
	Batch 1/16 Formal Approval Period	38d	29-Feb-08	28-Apr-08

Activity ID	Activity Name	Original Duration	Start	Finish
	Issue Batch 1/16 For Approval to CEC	0d	29-Feb-08	
	Receive CEC Prior Approval For Batch 1/16	0d	29-Apr-08	
	Batch 1/17	42d	30-Jan-08	28-Mar-08
	Batch 1/17 Formal Approval Period	38d	30-Jan-08	27-Mar-08
	Issue Batch 1/17 For Approval to CEC	0d	30-Jan-08	
	Receive CEC Prior Approval For Batch 1/17	0d	28-Mar-08	
	Roads, Track, OLE, Landscaping, Street Lighting	39d	27-Aug-07 A	19-Oct-07 A
	Informal Consultation With CEC & tie Over Prior Approval for Roads, Track, OLE, Landscaping and Street Lighting	37d	27-Aug-07 A	19-Oct-07 A
	Tram Stop Shandwick Place	113d	27-Aug-07 A	11-Feb-08
	Informal Consultation With CEC & tie over Prior Approval Tram Stop Shandwick Place	107d	27-Aug-07 A	11-Feb-08
	Tram Stop Princes Street	113d	04-Sep-07 A	18-Feb-08
	Informal Consultation With CEC & tie over Prior Approval Tram Stop Princes Street West	107d	04-Sep-07 A	18-Feb-08
	Technical Approvals	136d	05-Nov-07 A	21-May-08
	Roads inc Drainage Technical Approval	136d	05-Nov-07 A	21-May-08
	Issue Roads Design to Roads Authority for Approval	0d		22-Feb-08
	Roads Authority Approval Period	38d	25-Feb-08	22-Apr-08
	Receive Roads Authority Comments	0d		22-Apr-08
	Update to Roads Authority Comments	19d	23-Apr-08	21-May-08
	Roads Authority Informal Consultation	69d	05-Nov-07 A	22-Feb-08
	Roads Technical Approval Granted	0d		21-May-08
	VO37 Haymarket Charette Changes	52d	25-Sep-06 A	06-Dec-06 A
	Optioneering	0d	25-Sep-06 A	25-Sep-06 A
	2-Hour Meeting With CEC	0d	25-Sep-06 A	
	Feasibility (2 Designs)	5d	28-Sep-06 A	05-Oct-06 A
	2-Hour Meeting With CEC - Update	0d	28-Sep-06 A	
	With CEC For Approval	0d	05-Oct-06 A	
	Preliminary Design (1 Design)	0d	06-Dec-06 A	06-Dec-06 A
	4-hour Meeting With CEC for Approval	0d	06-Dec-06 A	
	Track (Task300.5.1)	0d	14-Sep-07 A	14-Sep-07 A
	Issue Notification Of Completion Letter - Track Alignment Design to tie Section 1D	0d		14-Sep-07 A
	Roads, Street Lighting & Landscaping (Task300.5.2)	27d	31-Oct-07 A	07-Dec-07 A
	Issue Notification Of Completion Letter- Roads Design to tie for Approval Section 1D	0d		16-Nov-07 A
	Issue Notification Of Completion Letter- Hard Landscaping Design to tie Section 1D	0d		07-Dec-07 A
	Issue Notification Of Completion Letter- Street Lighting Design (Inc. Any OLE Combined Pole Design) to tie Section 1D	0d		31-Oct-07 A
	Drainage	0d	16-Nov-07 A	16-Nov-07 A
	Issue Drainage Design Completion Letter to tie for Approval Section 1D ISSUED WITH 1D ROADS	0d		16-Nov-07 A
	Boundary & Accomodation Works (Task300.5.4)	0d	14-Sep-07 A	14-Sep-07 A
	Issue Notification Of Completion Letter- Detailed Design of Boundary & Accomodation Works Section 1D	0d		14-Sep-07 A
	HAY - SHP	119d	02-Jul-07 A	13-Dec-07 A
	Tram Stop Shandwick Place (Task300.5.8)	119d	02-Jul-07 A	13-Dec-07 A
	Issue Notification Of Completion Letter- Shandwick Place Tram Stop Design to tie	0d		13-Dec-07 A
	Site Visit with tie & CEC To Review Preliminary Design	1d	02-Jul-07 A	02-Jul-07 A
	SHP - PSW	325d	30-Aug-06 A	06-Dec-07 A
	Tram Stop Princes Street (Task300.5.9)	325d	30-Aug-06 A	06-Dec-07 A
	Issue Notification Of Completion Letter- Princes Street Tram Stop Design to tie	0d		06-Dec-07 A
	Site Visit with tie & CEC To Review Preliminary Design	1d	02-Jul-07 A	02-Jul-07 A
	Moving Stop Position (Due to Charette Changes)	34d	30-Aug-06 A	18-Oct-06 A
	Haymarket to Roseburn Junction - Section 2 (Task400)	478d	12-Jul-06 A	29-May-08
	Section Wide - Section 2	0d	03-Aug-07 A	03-Aug-07 A
	Section Wide	0d	03-Aug-07 A	03-Aug-07 A
	OLE (Task400.1)	0d	03-Aug-07 A	03-Aug-07 A
	Issue Notification Of Completion Letter- Final Detailed Layout Plans & Standard & Special Cross Sections to tie Sec2	0d		03-Aug-07 A
	HAY - ROJ - Section 2A (Task400.2)	478d	12-Jul-06 A	29-May-08
	Sub Section Wide	387d	16-Nov-06 A	29-May-08
	Sub Section Wide IDC	20d	04-Feb-08	29-Feb-08
	Subsection Wide IDC	19d	04-Feb-08	29-Feb-08
	Consents & Approvals	387d	16-Nov-06 A	29-May-08
	Prior Approvals	349d	16-Nov-06 A	08-Apr-08
	Combined Section Prior Approval	40d	08-Feb-08	04-Apr-08
	Issue Combined Package 2A for Prior Approval to CEC	0d		08-Feb-08
	Receive Combined Package 2A Comments From CEC	0d		04-Apr-08
	Prior Approval Granted for Section 2A Combined Package	0d		04-Apr-08
	CEC Approval Period - 2A Combined Package	38d	08-Feb-08	04-Apr-08
	Batch 2/01	42d	08-Feb-08	08-Apr-08
	Batch 2/01 Formal Approval Period	38d	08-Feb-08	07-Apr-08
	Issue Batch 2/01 For Approval to CEC	0d	08-Feb-08	
	Receive CEC Prior Approval For Batch 2/01	0d	08-Apr-08	
	Batch 2/02	39d	02-Nov-07 A	04-Jan-08 A
	Batch 2/02 Formal Approval Period	38d	02-Nov-07 A	04-Jan-08 A
	Issue Batch 2/02 For Approval to CEC	0d	02-Nov-07 A	
	Receive CEC Prior Approval For Batch 2/02	0d	24-Dec-07 A	
	Batch 2/03	163d	13-Aug-07 A	08-Apr-08
	Batch 2/03 Formal Approval Period	38d	08-Feb-08	07-Apr-08
	Issue Batch 2/03 For Approval to CEC	0d	08-Feb-08	
	Receive CEC Prior Approval For Batch 2/03	0d	08-Apr-08	
	Russell Road Bridge Informal Consultation	38d	13-Aug-07 A	09-Oct-07 A

Activity ID	Activity Name	Original Duration	Start	Finish
	Batch 2/04 Russell Road TPH Substation	129d	12-Jan-07 A	11-Jul-07 A
	Issue Russell Road TPH Substation Design for Prior Approval	0d		18-May-07 A
	Prior Approval For Russell Road TPH Substation	0d		11-Jul-07 A
	Receive Russell Road TPH Substation CEC Comments (No Comments)	0d		11-Jul-07 A
	Informal Consultation With CEC & tie over Prior Approval Russell Road TPH Substation	82d	12-Jan-07 A	17-May-07 A
	Batch 2/04 Formal Approval Period	36d	18-May-07 A	11-Jul-07 A
	Incorporate Russell Road TPH Substation CEC Comments for Prior Approval (No Comments)	1d	11-Jul-07 A	11-Jul-07 A
	Roads, Track, OLE, Landscaping, Street Lighting	40d	16-Jan-07 A	12-Mar-07 A
	Informal Consultation With CEC & tie Over Prior Approval for Roads, Track, OLE, Landscaping and Street Lighting	38d	16-Jan-07 A	12-Mar-07 A
	Tram Stop Haymarket	115d	16-Nov-06 A	04-May-07 A
	Issue Tram Stop Haymarket Design for Prior Approval	0d		05-Feb-07 A
	Informal Consultation With CEC & tie over Prior Approval Tram Stop Haymarket	48d	16-Nov-06 A	02-Feb-07 A
	CEC Approval Period (Protocol Changed to Combined Section)	58d	06-Feb-07 A	04-May-07 A
	Tram Haymarket Terrace 1 Sub Station	303d	30-Jan-07 A	08-Apr-08
	Informal Consultation With CEC & tie over Prior Approval Tram Haymarket Terrace 1 Substation	228d	30-Jan-07 A	21-Jan-08
	Prior Approval Tram Haymarket Terrace 1 Substation	0d		08-Apr-08
	Haymarket Station Viaduct Superstructure	40d	14-Jan-08	07-Mar-08
	Commence Haymarket Station Viaduct Superstructure Informal Consultation With CEC & tie Over Prior Approval	38d	14-Jan-08	07-Mar-08
	Technical Approvals	351d	16-Jan-07 A	29-May-08
	Russell Road Bridge Review Period (TAA)	159d	08-May-07 A	14-Dec-07 A
	Issue Russell Road Bridge Design Package to TAA	0d	28-Sep-07 A	
	TAA Russell Road Bridge Design Package Review Period	19d	28-Sep-07 A	25-Oct-07 A
	Receive Russell Road Bridge Design Package comments from TAA	0d	13-Nov-07 A	
	Incorporate TAA comments into Russell Road Bridge Design Package	22d	14-Nov-07 A	14-Dec-07 A
	Commence Russell Road Bridge Informal Consultation With CEC Over Technical Approval	55d	08-May-07 A	30-Jul-07 A
	Russell Road Bridge Review Period (Network Rail)	52d	06-Nov-07 A	25-Jan-08
	Issue Design and Check Certificate to Network Rail For Comment	0d	06-Nov-07 A	
	Network Rail Comment Period	19d	06-Nov-07 A	03-Dec-07 A
	Receive Network Rail Comments	0d	14-Jan-08	
	Incorporate Network Rail comments into Superstructure Design Package	9d	14-Jan-08	25-Jan-08
	Haymarket Station Viaduct Review Period (TAA)	265d	01-Feb-07 A	15-Feb-08
	Issue Haymarket Station Viaduct Superstructure Design Package to TAA	0d	30-Oct-07 A	
	TAA Haymarket Station Viaduct Superstructure Design Package Review Period	38d	30-Oct-07 A	24-Dec-07 A
	Receive Haymarket Station Viaduct Superstructure Design Package comments from TAA	0d	04-Feb-08*	
	Incorporate TAA comments into Haymarket Station Viaduct Superstructure Design Package	9d	04-Feb-08	15-Feb-08
	Commence Haymarket Station Viaduct Superstructure Informal Consultation With CEC Over Technical Approval	38d	01-Feb-07 A	28-Mar-07 A
	Haymarket Station Viaduct Review Period (Network Rail & ScotRail)	30d	18-Feb-08	28-Mar-08
	Issue Design and Check Certificate to Network Rail For Comment	0d	18-Feb-08	
	Receive Network Rail Comments	0d	17-Mar-08	
	Incorporate Network Rail & First Scot Rail comments into Superstructure Design Package	9d	17-Mar-08	28-Mar-08
	Network Rail Comment Period	19d	18-Feb-08	14-Mar-08
	Roads Technical Approval	351d	16-Jan-07 A	29-May-08
	Issue Roads Design to Roads Authority for Approval	0d		29-Feb-08
	Roads Authority Approval Period	38d	03-Mar-08	29-Apr-08
	Receive Roads Authority Comments	0d		29-Apr-08
	Update to Roads Authority Comments	19d	30-Apr-08	29-May-08
	Roads Authority Informal Consultation	38d	16-Jan-07 A	12-Mar-07 A
	Roads Technical Approval Granted	0d		29-May-08
	Drainage Technical Approval	83d	14-Jan-08	07-May-08
	Roads Authority Informal Consultation For Drainage	38d	14-Jan-08	07-Mar-08
	Issue Drainage Design to Roads Authority for Approval	0d		29-Feb-08
	Roads Authority Approval Period For Drainage	38d	03-Mar-08	29-Apr-08
	Receive Roads Authority Comments For Drainage	0d		29-Apr-08
	Update to Raods Authority Comments For Drainage	5d	30-Apr-08	07-May-08
	Drainage Approval Granted	0d		07-May-08
	Track (Task400.2.1)	72d	14-Dec-06 A	05-Apr-07 A
	Issue Track Alignment Design to tie Section 2A	0d		14-Dec-06 A
	Receive tie Comments	0d	05-Apr-07 A	
	Roads, Street Lighting & Landscaping (Task400.2.2)	68d	30-Jan-07 A	04-May-07 A
	Issue Roads Design to tie for Approval Section 2A	0d		30-Jan-07 A
	tie Approval Period	19d	30-Jan-07 A	26-Feb-07 A
	No tie Comments Received To Date - Change in Protocol Going Forward	0d		04-May-07 A
	Issue Hard & Soft Landscaping Design to tie Section 2A	0d		27-Feb-07 A
	Issue Street Lighting Design (Inc. Any OLE Combined Pole Design) to tie Section 2A	0d		30-Jan-07 A
	Drainage	84d	27-Sep-07 A	01-Feb-08
	Issue Drainage Design Completion Letter to tie for Approval Section 2A	0d		27-Sep-07 A
	Issue Drainage Design Completion Letter to tie for Approval Section 2A	0d		01-Feb-08
	Boundary & Accomodation Works (Task400.2.3)	0d	17-Aug-07 A	17-Aug-07 A
	Issue Notification Of Completion Letter- Detailed Design of Boundary & Accomodation Works Section 2A	0d		17-Aug-07 A
	Utilities (Task400.2.4)	97d	12-Apr-07 A	27-Aug-07 A
	SUC Approval Period	89d	12-Apr-07 A	27-Aug-07 A
	HAY - ROJ	389d	12-Jul-06 A	25-Jan-08
	Tram Stop Haymarket (Task400.2.7)	384d	12-Jul-06 A	18-Jan-08
	Issue Notification Of Completion Letter- Haymarket Tram Stop Design to tie	0d		18-Jan-08*
	Site Visit with tie & CEC To Review Preliminary Design	1d	12-Jul-06 A	12-Jul-06 A
	Issue Haymarket Tram Stop Package for Prior Approval to tie	0d		17-Nov-06 A

USB00000084_0010

Activity ID	Activity Name	Original Duration	Start	Finish
	tie Approval Period	19d	17-Nov-06 A	14-Dec-06 A
	Receive tie Comments	0d		23-Jan-07 A
	Structures	195d	30-Jan-07 A	29-Oct-07 A
	S01 Russell Road Bridge	153d	27-Feb-07 A	28-Sep-07 A
	Superstructure Detailed Design	153d	27-Feb-07 A	28-Sep-07 A
	Issue Superstructure Detailed Design Package to CAT II Checker	0d	27-Feb-07 A	
	Superstructure CAT II Check	39d	27-Feb-07 A	27-Apr-07 A
	Receive & Incorporate CAT II comments	50d	30-Apr-07 A	13-Jul-07 A
	Issue Notification Of Completion Letter- Russell Road Bridge Superstructure Design Package to tie	0d	28-Sep-07 A	
	Substructure Detailed Design	54d	16-Jul-07 A	28-Sep-07 A
	Issue Substructure Detailed Design Package to CAT II Checker	0d	16-Jul-07 A	
	Substructure CAT II Check	9d	16-Jul-07 A	27-Jul-07 A
	Receive & Incorporate CAT II comments	31d	30-Jul-07 A	13-Sep-07 A
	Issue Notification Of Completion Letter- Russell Road Bridge Substructure Design Package to tie	0d	28-Sep-07 A	
	S19 Haymarket Station Viaduct	195d	30-Jan-07 A	29-Oct-07 A
	Superstructure Detailed Design	195d	30-Jan-07 A	29-Oct-07 A
	Issue Superstructure Detailed Design Package to CAT II Checker	0d	30-Jan-07 A	
	Superstructure CAT II Check	59d	30-Jan-07 A	30-Apr-07 A
	Receive & Incorporate CAT II comments	39d	01-May-07 A	29-Jun-07 A
	Issue Notification Of Completion Letter- Haymarket Station Viaduct Superstructure Design Package to tie	0d		29-Oct-07 A
	Substructure Detailed Design	194d	30-Jan-07 A	29-Oct-07 A
	Substructure CAT II Check	59d	30-Jan-07 A	30-Apr-07 A
	Receive & Incorporate CAT II comments	39d	01-May-07 A	29-Jun-07 A
	Issue Substructure Detailed Design Package to CAT II Checker	0d	30-Jan-07 A	
	Issue Notification Of Completion Letter- Haymarket Station Viaduct Substructure Design Package to tie	0d	29-Oct-07 A	
	Tram Haymarket Terrace 1 Sub Station (Task400.2.8)	296d	17-Nov-06 A	25-Jan-08
	Issue Tram Haymarket Terrace 1 Substation Planning Submission to tie For Approval	0d		17-Nov-06 A
	tie Approval Period For Planning Submission	19d	20-Nov-06 A	15-Dec-06 A
	Receive tie Comments	0d		08-Jan-07 A
	Issue Notification Of Completion Letter- Tram Haymarket Terrace 1 Substation Detailed Engineering Drawings To tie	0d		25-Jan-08
	Russell Road TPH Substation (Task400.2.9)	94d	09-Jan-07 A	18-May-07 A
	Issue Russell Road TPH Substation Planning Submission to tie for Approval	0d		09-Jan-07 A
	tie Approval Period For Planning Submission	19d	09-Jan-07 A	05-Feb-07 A
	Receive tie Comments	0d		10-Apr-07 A
	Update Substation Planning Submission to Incorporate tie Comments	30d	02-Apr-07 A	18-May-07 A
	Haymarket to Granton Square - Section 3 (Task500)	459d	12-Sep-06 A	04-Jul-08
	Section Wide - Section 3	0d	20-Aug-07 A	20-Aug-07 A
	Section Wide	0d	20-Aug-07 A	20-Aug-07 A
	OLE (Task 500.1)	0d	20-Aug-07 A	20-Aug-07 A
	Issue Notification Of Completion Letter- Final Detailed Layout Plans & Standard & Special Cross Sections to tie Sec3	0d		20-Aug-07 A
	ROJ - CRT - Section 3A (Task500.2)	459d	12-Sep-06 A	04-Jul-08
	Sub Section Wide	412d	15-Nov-06 A	04-Jul-08
	Sub Section Wide IDC	20d	29-Jan-08	25-Feb-08
	Subsection Wide IDC	19d	29-Jan-08	25-Feb-08
	VO242 OLE Rework for Section 3A (Internal)	0d	09-Oct-07 A	09-Oct-07 A
	Issue OLE rework for section 3A	0d		09-Oct-07 A
	Consents & Approvals	362d	05-Feb-07 A	04-Jul-08
	Prior Approvals	362d	05-Feb-07 A	04-Jul-08
	Combined Section Prior Approval	60d	11-Apr-08	04-Jul-08
	Issue Combined Package 3A for Prior Approval to CEC	0d		11-Apr-08
	Receive Combined Package 3A Comments From CEC	0d		06-Jun-08
	Prior Approval Granted for Section 3A Combined Package	0d		04-Jul-08
	CEC Approval Period - 3A Combined Package	38d	11-Apr-08	06-Jun-08
	Update 3A Combined Package to CEC Comments	19d	06-Jun-08	04-Jul-08
	Batch 3/02	42d	15-Feb-08	15-Apr-08
	Batch 3/02 Formal Approval Period	38d	15-Feb-08	14-Apr-08
	Issue Batch 3/02 For Approval to CEC	0d	15-Feb-08	
	Receive CEC Prior Approval For Batch 3/02	0d	15-Apr-08	
	Batch 3/03	42d	11-Feb-08	09-Apr-08
	Batch 3/03 Formal Approval Period	38d	11-Feb-08	08-Apr-08
	Issue Batch 3/03 For Approval to CEC	0d	11-Feb-08	
	Receive CEC Prior Approval For Batch 3/03	0d	09-Apr-08	
	Batch 3/04	39d	05-Dec-07 A	07-Feb-08
	Batch 3/04 Formal Approval Period	38d	05-Dec-07 A	06-Feb-08
	Issue Batch 3/04 For Approval to CEC	0d	05-Dec-07 A	
	Receive CEC Prior Approval For Batch 3/04	0d	07-Feb-08	
	Batch 3/05	42d	22-Feb-08	22-Apr-08
	Batch 3/05 Formal Approval Period	38d	22-Feb-08	21-Apr-08
	Issue Batch 3/05 For Approval to CEC	0d	22-Feb-08	
	Receive CEC Prior Approval For Batch 3/05	0d	22-Apr-08	
	Batch 3/07	39d	21-Dec-07 A	25-Feb-08
	Batch 3/07 Formal Approval Period	38d	21-Dec-07 A	22-Feb-08
	Issue Batch 3/07 For Approval to CEC	0d	21-Dec-07 A	
	Receive CEC Prior Approval For Batch 3/07	0d	25-Feb-08	
	Batch 3/09	39d	21-Dec-07 A	25-Feb-08
	Batch 3/09 Formal Approval Period	38d	21-Dec-07 A	22-Feb-08

USB00000084_0011

Activity ID	Activity Name	Original Duration	Start	Finish
	Issue Batch 3/09 For Approval to CEC	0d	21-Dec-07 A	
	Receive CEC Prior Approval For Batch 3/09	0d	25-Feb-08	
	Batch 3/10	42d	08-Feb-08	08-Apr-08
	Batch 3/10 Formal Approval Period	38d	08-Feb-08	07-Apr-08
	Issue Batch 3/10 For Approval to CEC	0d	08-Feb-08	
	Receive CEC Prior Approval For Batch 3/10	0d	08-Apr-08	
	Batch 3/11	39d	21-Dec-07 A	25-Feb-08
	Batch 3/11 Formal Approval Period	38d	21-Dec-07 A	22-Feb-08
	Issue Batch 3/11 For Approval to CEC	0d	21-Dec-07 A	
	Receive CEC Prior Approval For Batch 3/11	0d	25-Feb-08	
	Batch 3/12	42d	11-Apr-08	10-Jun-08
	Batch 3/12 Formal Approval Period	38d	11-Apr-08	09-Jun-08
	Issue Batch 3/12 For Approval to CEC	0d	11-Apr-08	
	Receive CEC Prior Approval For Batch 3/12	0d	10-Jun-08	
	Batch 3/13	47d	16-Nov-07 A	31-Jan-08
	Batch 3/13 Formal Approval Period	45d	16-Nov-07 A	30-Jan-08
	Issue Batch 3/13 For Approval to CEC	0d	16-Nov-07 A	
	Receive CEC Prior Approval For Batch 3/13	0d	31-Jan-08	
	Batch 3/14	42d	20-Feb-08	18-Apr-08
	Batch 3/14 Formal Approval Period	38d	20-Feb-08	17-Apr-08
	Issue Batch 3/14 For Approval to CEC	0d	20-Feb-08	
	Receive CEC Prior Approval For Batch 3/14	0d	18-Apr-08	
	Roads, Track, OLE, Landscaping, Street Lighting	40d	14-Jan-08	07-Mar-08
	Informal Consultation With CEC & tie Over Prior Approval for Roads, Track, OLE, Landscaping and Street Lighting	38d	14-Jan-08	07-Mar-08
	Tram Stop Roseburn	221d	09-Mar-07 A	22-Jan-08
	Informal Consultation With CEC & tie over Prior Approval Tram Stop Roseburn	203d	09-Mar-07 A	22-Jan-08
	Tram Stop Ravelston	14d	20-Feb-07 A	09-Mar-07 A
	Issue Tram Stop Ravelston Design for Prior Approval	0d		09-Mar-07 A
	Informal Consultation With CEC & tie over Prior Approval for Tram Stop Ravelston	13d	20-Feb-07 A	09-Mar-07 A
	Tram Stop Craigleith	214d	09-Mar-07 A	14-Jan-08
	Informal Consultation With CEC & tie over Prior Approval Tram Stop Craigleith	197d	09-Mar-07 A	14-Jan-08
	Tram Stop Telford Road	214d	09-Mar-07 A	14-Jan-08
	Informal Consultation With CEC & tie over Prior Approval Tram Stop Telford Road	197d	09-Mar-07 A	14-Jan-08
	Tram Stop Crewe Toll for Western General Hospital	102d	09-Mar-07 A	30-Jul-07 A
	Informal Consultation With CEC & tie over Prior Approval Tram Stop Crewe Toll for Western General Hospital	92d	09-Mar-07 A	30-Jul-07 A
	Tram South Groathill Avenue Substation	288d	20-Feb-07 A	08-Apr-08
	Prior Approval For Tram South Groathill Avenue Substation	0d		08-Apr-08
	Informal Consultation With CEC & tie Over Prior Approval Tram South Groathill Avenue Substation	38d	20-Feb-07 A	18-Apr-07 A
	Roseburn Corridor Retaining Structure Section A	41d	21-Jun-07 A	17-Aug-07 A
	Commence Roseburn Corridor RW Section A Informal Consultation With CEC & tie Over Prior Approval	38d	21-Jun-07 A	17-Aug-07 A
	Roseburn Corridor Retaining Structure Section B	41d	21-Jun-07 A	17-Aug-07 A
	Commence Roseburn Corridor RW Section B Informal Consultation With CEC & tie Over Prior Approval	38d	21-Jun-07 A	17-Aug-07 A
	Roseburn Corridor Retaining Structure Section C	41d	20-Jun-07 A	16-Aug-07 A
	Commence Roseburn Corridor RW Section C Informal Consultation With CEC & tie Over Prior Approval	38d	20-Jun-07 A	16-Aug-07 A
	Roseburn Corridor Retaining Structure Section D	40d	25-Jun-07 A	17-Aug-07 A
	Commence Roseburn Corridor RW Section D Informal Consultation With CEC & tie Over Prior Approval	38d	25-Jun-07 A	17-Aug-07 A
	Roseburn Corridor Retaining Structure Section E	41d	21-Jun-07 A	17-Aug-07 A
	Commence Roseburn Corridor RW Section E Informal Consultation With CEC & tie Over Prior Approval	38d	21-Jun-07 A	17-Aug-07 A
	Roseburn Corridor Retaining Structure Section F	40d	25-Jun-07 A	17-Aug-07 A
	Commence Roseburn Corridor RW Section F Informal Consultation With CEC & tie Over Prior Approval	38d	25-Jun-07 A	17-Aug-07 A
	Roseburn Corridor Retaining Structure Section G	20d	30-Jul-07 A	24-Aug-07 A
	Commence Roseburn Corridor RW Section G Informal Consultation With CEC & tie Over Prior Approval	19d	30-Jul-07 A	24-Aug-07 A
	Roseburn Corridor Retaining Structure Section H	40d	25-Jun-07 A	17-Aug-07 A
	Commence Roseburn Corridor RW Section H Informal Consultation With CEC & tie Over Prior Approval	38d	25-Jun-07 A	17-Aug-07 A
	Roseburn Terrace Bridge Superstructure	44d	02-Apr-07 A	01-Jun-07 A
	Commence Roseburn Terrace Superstructure Informal Consultation With CEC & tie Over Prior Approval	38d	02-Apr-07 A	01-Jun-07 A
	St Georges School Access Bridge Structure	40d	05-Feb-07 A	02-Apr-07 A
	Commence St Georges Access Bridge Informal Consultation With CEC & tie Over Prior Approval	38d	05-Feb-07 A	02-Apr-07 A
	St Georges School Footbridge Structure	50d	13-Apr-07 A	22-Jun-07 A
	Commence St Georges Footbridge Informal Consultation With CEC & tie Over Prior Approval	45d	13-Apr-07 A	22-Jun-07 A
	Ravelston Dykes Bridge Structure	42d	10-Apr-07 A	06-Jun-07 A
	Commence Ravelston Dykes Informal Consultation With CEC & tie Over Prior Approval	38d	10-Apr-07 A	06-Jun-07 A
	Craigleith Drive Bridge Structure	44d	30-Mar-07 A	30-May-07 A
	Commence Craigleith Drive Bridge Informal Consultation With CEC & tie Over Prior Approval	38d	30-Mar-07 A	30-May-07 A
	Holiday Inn Access Bridge Structure	42d	10-Apr-07 A	06-Jun-07 A
	Commence Holiday Inn Access Bridge Informal Consultation With CEC & tie Over Prior Approval	38d	10-Apr-07 A	06-Jun-07 A
	Queensferry Road Bridge Structure	42d	10-Apr-07 A	06-Jun-07 A
	Commence Queensferry Road Bridge Informal Consultation With CEC & tie Over Prior Approval	38d	10-Apr-07 A	06-Jun-07 A
	Groathill Road South Bridge Structure	61d	30-Mar-07 A	22-Jun-07 A
	Commence Groathill Road South Bridge Informal Consultation With CEC & tie Over Prior Approval	53d	30-Mar-07 A	22-Jun-07 A
	Telford Road Bridge Structure	192d	10-Apr-07 A	14-Jan-08
	Commence Telford Road Bridge Informal Consultation With CEC & tie Over Prior Approval	178d	10-Apr-07 A	14-Jan-08
Technical Approvals		332d	05-Feb-07 A	22-May-08
	Roseburn Corridor Retaining Structure Section A Review Period (TAA)	155d	21-May-07 A	21-Dec-07 A
	Issue Roseburn Corridor RW Section A Design Package to TAA	0d	16-Aug-07 A	
	TAA Roseburn Corridor RW Section A Design Package Review Period	38d	17-Aug-07 A	12-Oct-07 A

Activity ID	Activity Name	Original Duration	Start	Finish
	Receive Roseburn Corridor RW Section A Design Package comments from TAA	0d	09-Nov-07 A	
	Incorporate TAA comments into Roseburn Corridor RW Section A Design Package	28d	12-Nov-07 A	21-Dec-07 A
	Commence Roseburn Corridor RW Section A Informal Consultation With CEC Over Technical Approval	27d	21-May-07 A	29-Jun-07 A
	Roseburn Corridor Retaining Structure Section B Review Period (TAA)	156d	18-May-07 A	21-Dec-07 A
	Commence Roseburn Corridor RW Section B Informal Consultation With CEC Over Technical Approval	38d	18-May-07 A	13-Jul-07 A
	Issue Roseburn Corridor RW Section B Design Package to TAA	0d	16-Aug-07 A	
	TAA Roseburn Corridor RW Section B Design Package Review Period	38d	17-Aug-07 A	12-Oct-07 A
	Receive Roseburn Corridor RW Section B Design Package comments from TAA	0d	09-Nov-07 A	
	Incorporate TAA comments into Roseburn Corridor RW Section B Design Package	28d	12-Nov-07 A	21-Dec-07 A
	Roseburn Corridor Retaining Structure Section C Review Period (TAA)	156d	18-May-07 A	21-Dec-07 A
	Issue Roseburn Corridor RW Section C Design Package to TAA	0d	16-Aug-07 A	
	TAA Roseburn Corridor RW Section C Design Package Review Period	38d	17-Aug-07 A	12-Oct-07 A
	Receive Roseburn Corridor RW Section C Design Package comments from TAA	0d	09-Nov-07 A	
	Incorporate TAA comments into Roseburn Corridor RW Section C Design Package	28d	12-Nov-07 A	21-Dec-07 A
	Commence Roseburn Corridor RW Section C Informal Consultation With CEC Over Technical Approval	38d	18-May-07 A	13-Jul-07 A
	Roseburn Corridor Retaining Structure Section D Review Period (TAA)	156d	18-May-07 A	21-Dec-07 A
	Issue Roseburn Corridor RW Section D Design Package to TAA	0d	16-Aug-07 A	
	TAA Roseburn Corridor RW Section D Design Package Review Period	38d	17-Aug-07 A	12-Oct-07 A
	Receive Roseburn Corridor RW Section D Design Package comments from TAA	0d	09-Nov-07 A	
	Incorporate TAA comments into Roseburn Corridor RW Section D Design Package	28d	12-Nov-07 A	21-Dec-07 A
	Commence Roseburn Corridor RW Section D Informal Consultation With CEC Over Technical Approval	29d	18-May-07 A	02-Jul-07 A
	Roseburn Corridor Retaining Structure Section E Review Period (TAA)	155d	21-May-07 A	21-Dec-07 A
	Issue Roseburn Corridor RW Section E Design Package to TAA	0d	16-Aug-07 A	
	TAA Roseburn Corridor RW Section E Design Package Review Period	38d	17-Aug-07 A	12-Oct-07 A
	Receive Roseburn Corridor RW Section E Design Package comments from TAA	0d	09-Nov-07 A	
	Incorporate TAA comments into Roseburn Corridor RW Section E Design Package	28d	12-Nov-07 A	21-Dec-07 A
	Commence Roseburn Corridor RW Section E Informal Consultation With CEC Over Technical Approval	38d	21-May-07 A	16-Jul-07 A
	Roseburn Corridor Retaining Structure Section F Review Period (TAA)	156d	18-May-07 A	21-Dec-07 A
	Issue Roseburn Corridor RW Section F Design Package to TAA	0d	16-Aug-07 A	
	TAA Roseburn Corridor RW Section F Design Package Review Period	38d	17-Aug-07 A	12-Oct-07 A
	Receive Roseburn Corridor RW Section F Design Package comments from TAA	0d	09-Nov-07 A	
	Incorporate TAA comments into Roseburn Corridor RW Section Fe Design Package	28d	12-Nov-07 A	21-Dec-07 A
	Commence Roseburn Corridor RW Section F Informal Consultation With CEC Over Technical Approval	38d	18-May-07 A	13-Jul-07 A
	Roseburn Corridor Retaining Structure Section G Review Period (TAA)	154d	22-May-07 A	21-Dec-07 A
	Issue Roseburn Corridor RW Section G Design Package to TAA	0d	16-Aug-07 A	
	TAA Roseburn Corridor RW Section G Design Package Review Period	38d	17-Aug-07 A	12-Oct-07 A
	Receive Roseburn Corridor RW Section G Design Package comments from TAA	0d	09-Nov-07 A	
	Incorporate TAA comments into Roseburn Corridor RW Section G Design Package	28d	12-Nov-07 A	21-Dec-07 A
	Commence Roseburn Corridor RW Section G Informal Consultation With CEC Over Technical Approval	38d	22-May-07 A	17-Jul-07 A
	Roseburn Corridor Retaining Structure Section H Review Period (TAA)	111d	20-Jul-07 A	21-Dec-07 A
	Issue Roseburn Corridor RW Section H Design Package to TAA	0d	16-Aug-07 A	
	TAA Roseburn Corridor RW Section H Design Package Review Period	38d	17-Aug-07 A	12-Oct-07 A
	Receive Roseburn Corridor RW Section H Design Package comments from TAA	0d	09-Nov-07 A	
	Incorporate TAA comments into Roseburn Corridor RW Section H Design Package	28d	12-Nov-07 A	21-Dec-07 A
	Commence Roseburn Corridor RW Section H Informal Consultation With CEC Over Technical Approval	14d	20-Jul-07 A	09-Aug-07 A
	Roseburn Terrace Bridge Review Period (TAA)	152d	24-Apr-07 A	21-Nov-07 A
	Commence Roseburn Terrace Informal Consultation With CEC Over Technical Approval	17d	24-Apr-07 A	18-May-07 A
	Issue Roseburn Terrace Design Package to TAA	0d		02-Jul-07 A
	TAA Roseburn Terrace Design Package Review Period	38d	02-Jul-07 A	24-Aug-07 A
	Receive Roseburn TerraceDesign Package Comments from TAA	0d		06-Nov-07 A
	Incorporate TAA Comments into Roseburn Terrace Design Package	10d	07-Nov-07 A	21-Nov-07 A
	Coltbridge Viaduct Structure Review Period (TAA)	91d	30-Jul-07 A	03-Dec-07 A
	Commence Coltbridge Viaduct Informal Consultation With CEC Over Technical Approval	31d	30-Jul-07 A	13-Sep-07 A
	Issue Coltbridge Viaduct Design Package to TAA	0d		13-Sep-07 A
	TAA Coltbridge Viaduct Design Package Review Period	38d	13-Sep-07 A	07-Nov-07 A
	Receive Coltbridge Viaduct Design Package Comments from TAA	0d		19-Nov-07 A
	Incorporate TAA Comments into Coltbridge Viaduct Design Package	9d	20-Nov-07 A	03-Dec-07 A
	St Georges School Access Bridge Structure Review Period (TAA)	161d	05-Feb-07 A	17-Sep-07 A
	Commence St Georges Access Bridge Informal Consultation With CEC Over Technical Approval	60d	05-Feb-07 A	08-May-07 A
	Issue St Georges Access Bridge Design Package to TAA	0d		25-May-07 A
	TAA St Georges Access Bridge Design Package Review Period	38d	25-May-07 A	20-Jul-07 A
	Receive St Georges Access Bridge Design Package Comments from TAA	0d		03-Sep-07 A
	Incorporate TAA Comments into St Georges Access Bridge Design Package	9d	04-Sep-07 A	17-Sep-07 A
	St Georges School Footbridge Structure Review Period (TAA)	97d	04-May-07 A	17-Sep-07 A
	Commence St Georges Footbridge Informal Consultation With CEC Over Technical Approval	14d	04-May-07 A	25-May-07 A
	Issue St Georges Footbridge Design Package to TAA	0d		25-May-07 A
	TAA St Georges Footbridge Design Package Review Period	38d	29-May-07 A	23-Jul-07 A
	Receive St Georges Footbridge Design Package Comments from TAA	0d		03-Sep-07 A
	Incorporate TAA Comments into St Georges Footbridge Design Package	9d	04-Sep-07 A	17-Sep-07 A
	Ravelston Dykes Bridge Structure Review Period (TAA)	148d	22-Feb-07 A	17-Sep-07 A
	Commence Ravelston Dykes Informal Consultation With CEC Over Technical Approval	38d	22-Feb-07 A	20-Apr-07 A
	Issue Ravelston Dykes Design Package to TAA	0d		25-May-07 A
	TAA Ravelston Dykes Design Package Review Period	38d	29-May-07 A	23-Jul-07 A
	Receive Ravelston Dykes Design Package Comments from TAA	0d		03-Sep-07 A
	Incorporate TAA Comments into Ravelston Dykes Design Package	9d	04-Sep-07 A	17-Sep-07 A
	Craigleith Drive Bridge Structure Review Period (TAA)	105d	24-Apr-07 A	17-Sep-07 A

USB00000084_0013

Activity ID	Activity Name	Original Duration	Start	Finish
	Commence Craigleith Drive Bridge Informal Consultation With CEC Over Technical Approval	31d	24-Apr-07 A	11-Jun-07 A
	Issue Craigleith Drive Bridge Design Package to TAA	0d		12-Jun-07 A
	TAA Craigleith Drive Bridge Design Package Review Period	38d	12-Jun-07 A	06-Aug-07 A
	Receive Craigleith Drive Bridge Design Package Comments from TAA	0d		03-Sep-07 A
	Incorporate TAA Comments into Craigleith Drive Bridge Design Package	9d	04-Sep-07 A	17-Sep-07 A
	Holiday Inn Access Bridge Structure Review Period (TAA)	115d	10-Apr-07 A	17-Sep-07 A
	Commence Holiday Inn Access Bridge Informal Consultation With CEC Over Technical Approval	25d	10-Apr-07 A	17-May-07 A
	Issue Holiday Inn Access Bridge Design Package to TAA	0d		18-May-07 A
	TAA Holiday Inn Access Bridge Design Package Review Period	38d	21-May-07 A	16-Jul-07 A
	Receive Holiday Inn Access Bridge Design Package Comments from TAA	0d		03-Sep-07 A
	Incorporate TAA Comments into Holiday Inn Access Bridge Design Package	9d	04-Sep-07 A	17-Sep-07 A
	Queensferry Road Bridge Structure Review Period (TAA)	150d	10-Apr-07 A	05-Nov-07 A
	Commence Queensferry Road Bridge Informal Consultation With CEC Over Technical Approval	25d	10-Apr-07 A	17-May-07 A
	Issue Queensferry Road Bridge Design Package to TAA	0d		18-May-07 A
	TAA Queensferry Road Bridge Design Package Review Period	38d	21-May-07 A	16-Jul-07 A
	Receive Queensferry Road Bridge Design Package Comments from TAA	0d		22-Oct-07 A
	Incorporate TAA Comments into Queensferry Road Bridge Design Package	9d	23-Oct-07 A	05-Nov-07 A
	Groathill Road South Bridge Structure Review Period (TAA)	105d	24-Apr-07 A	17-Sep-07 A
	Commence Groathill Road South Bridge Informal Consultation With CEC Over Technical Approval	18d	24-Apr-07 A	21-May-07 A
	Issue Groathill Road South Bridge Design Package to TAA	0d		26-Jun-07 A
	TAA Groathill Road South Bridge Design Package Review Period	38d	26-Jun-07 A	20-Aug-07 A
	Receive Groathill Road South Bridge Design Package Comments from TAA	0d		03-Sep-07 A
	Incorporate TAA Comments into Groathill Road South Bridge Design Package	9d	04-Sep-07 A	17-Sep-07 A
	Telford Road Bridge Structure Review Period (TAA)	150d	10-Apr-07 A	05-Nov-07 A
	Commence Telford Road Bridge Informal Consultation With CEC Over Technical Approval	26d	10-Apr-07 A	18-May-07 A
	Issue Telford Road Bridge Design Package to TAA	0d		25-May-07 A
	TAA Telford Road Bridge Design Package Review Period	38d	25-May-07 A	23-Jul-07 A
	Receive Telford Road Bridge Design Package Comments from TAA	0d		22-Oct-07 A
	Incorporate TAA Comments into Telford Road Bridge Design Package	9d	23-Oct-07 A	05-Nov-07 A
	Roads Technical Approval	94d	14-Jan-08	22-May-08
	Issue Roads Design to Roads Authority for Approval	0d		25-Feb-08
	Roads Authority Approval Period	38d	26-Feb-08	23-Apr-08
	Receive Roads Authority Comments	0d		23-Apr-08
	Update to Roads Authority Comments	19d	24-Apr-08	22-May-08
	Roads Authority Informal Consultation	38d	14-Jan-08	07-Mar-08
	Roads Technical Approval Granted	0d		22-May-08
	Drainage Technical Approval	78d	14-Jan-08	30-Apr-08
	Roads Authority Informal Consultation For Drainage	38d	14-Jan-08	07-Mar-08
	Issue Drainage Design to Roads Authority for Approval	0d		25-Feb-08
	Roads Authority Approval Period For Drainage	38d	26-Feb-08	23-Apr-08
	Receive Roads Authority Comments For Drainage	0d		23-Apr-08
	Update to Roads Authority Comments For Drainage	5d	24-Apr-08	30-Apr-08
	Drainage Technical Approval Granted	0d		30-Apr-08
	Track (Task 500.2.1)	41d	02-Feb-07 A	03-Apr-07 A
	Issue Track Alignment Design to tie Section 3A	0d		02-Feb-07 A
	Receive tie Comments	0d	03-Apr-07 A	
	Roads, Street Lighting & Landscaping (Task 500.2.2)	31d	14-Aug-07 A	26-Sep-07 A
	Issue Notification Of Completion Letter- Roads Design to tie for Approval Section 3A	0d		14-Aug-07 A
	Issue Notification Of Completion Letter- Hard & Soft Landscaping Design to tie Section 3A	0d		26-Sep-07 A
	Issue Notification Of Completion Letter- Street Lighting Design (Inc. Any OLE Combined Pole Design) to tie Section 3A	0d		17-Aug-07 A
	Drainage	70d	11-Oct-07 A	28-Jan-08
	Issue Drainage Design Completion Letter to tie for Approval Section 3A	0d		11-Oct-07 A
	Issue Drainage Design Completion Letter to tie for Approval Section 3A	0d		28-Jan-08
	Boundary & Accomodation Works (Task 500.2.3)	0d	24-Aug-07 A	24-Aug-07 A
	Issue Notification Of Completion Letter- Detailed Design of Boundary & Accomodation Works Section 3A	0d		24-Aug-07 A
	Environmental	269d	15-Nov-06 A	06-Dec-07 A
	Badger Mitigation Plan	269d	15-Nov-06 A	06-Dec-07 A
	Issue Badger Mitigation Plan to tie	0d		22-Dec-06 A
	tie Approval Period	28d	22-Dec-06 A	12-Feb-07 A
	Re-Issue Draft Badger Mitigation Plan to tie	0d		08-Nov-07 A
	tie Approval Period	19d	09-Nov-07 A	06-Dec-07 A
	Issue New Setts/ Holt Design Section 3A	0d		15-Nov-06 A
	Landscaping and Habitat Plan	83d	22-Dec-06 A	26-Apr-07 A
	Issue Landscape & Habitat Management Plan to tie	0d		22-Dec-06 A
	tie Approval Period	48d	22-Dec-06 A	12-Mar-07 A
	CEC Approval Period	38d	28-Feb-07 A	26-Apr-07 A
	Utilities Plates 1 to 23	92d	19-Apr-07 A	27-Aug-07 A
	Issue to SUCs	0d		19-Apr-07 A
	SUCs Approval	84d	19-Apr-07 A	27-Aug-07 A
	Roseburn Corridor Retaining Structures	90d	13-Apr-07 A	17-Aug-07 A
	Roseburn Corridor Retaining Structures: Section A - Russell Road to Roseburn Terrace	90d	13-Apr-07 A	17-Aug-07 A
	Structure Detailed Design	90d	13-Apr-07 A	17-Aug-07 A
	Issue Structure Detailed Design Package to CAT I Checker	0d	13-Apr-07 A	
	Structure CAT I Check	67d	13-Apr-07 A	24-Jul-07 A
	Receive & Incorporate CAT I comments	73d	27-Apr-07 A	16-Aug-07 A
	Issue Notification Of Completion Letter- Roseburn Corridor Retaining Structure Design Package For Section A to tie	0d	17-Aug-07 A	

Activity ID	Activity Name	Original Duration	Start	Finish
	Roseburn Corridor Retaining Structures: Section B -Roseburn Terrace to Coltbridge Viaduct	22d	18-Jul-07 A	17-Aug-07 A
	Structure Detailed Design	22d	18-Jul-07 A	17-Aug-07 A
	Issue Structure Detailed Design Package to CAT I Checker	0d	18-Jul-07 A	
	Structure CAT I Check	9d	18-Jul-07 A	31-Jul-07 A
	Receive & Incorporate CAT I comments	5d	01-Aug-07 A	07-Aug-07 A
	Issue Notification Of Completion Letter- Roseburn Corridor Retaining Structure Design Package For Section B to tie	0d	17-Aug-07 A	
	Roseburn Corridor Retaining Structures: Section C - Coltbridge Viaduct to Ravelston	22d	18-Jul-07 A	17-Aug-07 A
	Structure Detailed Design	22d	18-Jul-07 A	17-Aug-07 A
	Issue Structure Detailed Design Package to CAT I Checker	0d	18-Jul-07 A	
	Structure CAT I Check	9d	18-Jul-07 A	31-Jul-07 A
	Receive & Incorporate CAT I comments	5d	01-Aug-07 A	07-Aug-07 A
	Issue Notification Of Completion Letter- Roseburn Corridor Retaining Structure Design Package For Section C to tie	0d	17-Aug-07 A	
	Roseburn Corridor Retaining Structures: Section D - Ravelston to Craigleith Drive	69d	14-May-07 A	17-Aug-07 A
	Structure Detailed Design	69d	14-May-07 A	17-Aug-07 A
	Issue Structure Detailed Design Package to CAT I Checker	0d	14-May-07 A	
	Structure CAT I Check	51d	14-May-07 A	27-Jul-07 A
	Receive & Incorporate CAT I comments	41d	29-May-07 A	27-Jul-07 A
	Issue Notification Of Completion Letter- Roseburn Corridor Retaining Structure Design Package For Section D to tie	0d	17-Aug-07 A	
	Roseburn Corridor Retaining Structures: Section E -Craigleith Drive to Queensferry Road	19d	23-Jul-07 A	17-Aug-07 A
	Structure Detailed Design	19d	23-Jul-07 A	17-Aug-07 A
	Issue Structure Detailed Design Package to CAT I Checker	0d	23-Jul-07 A	
	Structure CAT I Check	9d	23-Jul-07 A	03-Aug-07 A
	Receive & Incorporate CAT I comments	8d	06-Aug-07 A	16-Aug-07 A
	Issue Notification Of Completion Letter- Roseburn Corridor Retaining Structure Design Package For Section E to tie	0d	17-Aug-07 A	
	Roseburn Corridor Retaining Structures: Section F - Queensferry Road to Groathill	19d	23-Jul-07 A	16-Aug-07 A
	Structure Detailed Design	19d	23-Jul-07 A	16-Aug-07 A
	Issue Structure Detailed Design Package to CAT I Checker	0d	23-Jul-07 A	
	Structure CAT I Check	5d	23-Jul-07 A	27-Jul-07 A
	Receive & Incorporate CAT I comments	13d	30-Jul-07 A	16-Aug-07 A
	Issue Notification Of Completion Letter- Roseburn Corridor Retaining Structure Design Package For Section F to tie	0d	16-Aug-07 A	
	Roseburn Corridor Retaining Structures: Section G - Groathill to Telford Road	19d	23-Jul-07 A	17-Aug-07 A
	Structure Detailed Design	19d	23-Jul-07 A	17-Aug-07 A
	Issue Structure Detailed Design Package to CAT I Checker	0d	23-Jul-07 A	
	Structure CAT I Check	9d	23-Jul-07 A	03-Aug-07 A
	Receive & Incorporate CAT I comments	8d	06-Aug-07 A	16-Aug-07 A
	Issue Notification Of Completion Letter- Roseburn Corridor Retaining Structure Design Package For Section G to tie	0d	17-Aug-07 A	
	Roseburn Corridor Retaining Structures: Section H - Telford Road to Ferry Road	19d	23-Jul-07 A	17-Aug-07 A
	Structure Detailed Design	19d	23-Jul-07 A	17-Aug-07 A
	Issue Structure Detailed Design Package to CAT I Checker	0d	23-Jul-07 A	
	Structure CAT I Check	9d	23-Jul-07 A	03-Aug-07 A
	Receive & Incorporate CAT I comments	8d	06-Aug-07 A	16-Aug-07 A
	Issue Notification Of Completion Letter- Roseburn Corridor Retaining Structure Design Package For Section H to tie	0d	17-Aug-07 A	
	ROU - ROS	233d	19-Jan-07 A	11-Dec-07 A
	Tram Stop Roseburn (Task500.2.6)	233d	19-Jan-07 A	11-Dec-07 A
	Issue Notification Of Completion Letter- Roseburn Tram Stop Design to tie	0d		11-Dec-07 A
	Site Visit with tie & CEC To Review Preliminary Design	2d	19-Jan-07 A	22-Jan-07 A
	Structures	89d	26-Feb-07 A	29-Jun-07 A
	S01 Roseburn Terrace Bridge	89d	26-Feb-07 A	29-Jun-07 A
	Roseburn Terrace Bridge Superstructure Detailed Design	87d	26-Feb-07 A	27-Jun-07 A
	Issue Superstructure Detailed Design Package to CAT II Checker	0d		26-Feb-07 A
	Superstructure CAT II Check	44d	27-Feb-07 A	04-May-07 A
	Receive and Incoporate CAT II Comments	9d	04-May-07 A	18-May-07 A
	Issue Notification Of Completion Letter- Roseburn Terrace Bridge Superstructure Design Package to tie	0d		27-Jun-07 A
	Roseburn Terrace Bridge Substructure Detailed Design	89d	26-Feb-07 A	29-Jun-07 A
	Issue Substructure Detailed Design Package to CAT II Checker	0d		26-Feb-07 A
	Substructure CAT II Check	27d	27-Feb-07 A	10-Apr-07 A
	Receive and Incorporate CAT II Comments	13d	02-Apr-07 A	23-Apr-07 A
	Issue Notification Of Completion Letter- Roseburn Terrace Bridge Substructure Detailed Design Package to tie	0d		29-Jun-07 A
	ROS - RAD	233d	19-Jan-07 A	11-Dec-07 A
	Tram Stop Ravelston (Task500.2.7)	233d	19-Jan-07 A	11-Dec-07 A
	Issue Notification Of Completion Letter- Ravelston Tram Stop Design to tie	0d		11-Dec-07 A
	Site Visit with tie & CEC To Review Preliminary Design	1d	19-Jan-07 A	19-Jan-07 A
	Structures	163d	29-Jan-07 A	13-Sep-07 A
	S02 Coltbridge Viaduct	35d	27-Jul-07 A	13-Sep-07 A
	Coltbridge Viaduct Structure Detailed Design	35d	27-Jul-07 A	13-Sep-07 A
	Issue Structure Detailed Design Package to CAT II Checker	0d		27-Jul-07 A
	Structure CAT II Check	19d	27-Jul-07 A	23-Aug-07 A
	Receive and Incoporate CAT II Comments	9d	28-Aug-07 A	10-Sep-07 A
	Issue Notification Of Completion Letter- Coltbridge Viaduct Structure Design Package to tie	0d		13-Sep-07 A
	S03 St Georges School Access Bridge	107d	29-Jan-07 A	27-Jun-07 A
	St Georges School Access Bridge Structure Detailed Design	107d	29-Jan-07 A	27-Jun-07 A
	Issue Structure Detailed Design Package to CAT I Checker	0d		29-Jan-07 A
	Structure CAT I Check	9d	30-Jan-07 A	12-Feb-07 A
	Receive and Incoporate CAT I Comments	9d	13-Feb-07 A	26-Feb-07 A
	Issue Notification Of Completion Letter- St Georges School Access Bridge Structure Design Package to tie	0d		27-Jun-07 A
	S04 St Georges School Footbridge	86d	27-Feb-07 A	27-Jun-07 A

Activity ID	Activity Name	Original Duration	Start	Finish
	St Georges School Footbridge Structure Detailed Design	86d	27-Feb-07 A	27-Jun-07 A
	Issue Structure Detailed Design Package to CAT I Checker	0d		27-Feb-07 A
	Structure CAT I Check	37d	12-Mar-07 A	08-May-07 A
	Receive and Incoporate CAT I Comments	27d	26-Mar-07 A	08-May-07 A
	Issue Notification Of Completion Letter- St Georges School Footbridge Structure Design Package to tie	0d		27-Jun-07 A
	RAD - CRA	209d	02-Oct-06 A	30-Jul-07 A
	Tram Stop Craigleith (Task500.2.8)	136d	22-Jan-07 A	30-Jul-07 A
	Issue Notification Of Completion Letter- Craigleith Tram Stop Design to tie	0d		30-Jul-07 A
	Site Visit with tie & CEC To Review Preliminary Design	1d	22-Jan-07 A	22-Jan-07 A
	Structures	186d	02-Oct-06 A	27-Jun-07 A
	S05 Ravelston Dykes Bridge	122d	08-Jan-07 A	27-Jun-07 A
	Ravelston Dykes Bridge Structure Detailed Design	122d	08-Jan-07 A	27-Jun-07 A
	Issue Structure Detailed Design Package to CAT I Checker	0d		08-Jan-07 A
	Structure CAT I Check	9d	09-Jan-07 A	22-Jan-07 A
	Receive and Incoporate CAT I Comments	9d	23-Jan-07 A	05-Feb-07 A
	Issue Notification Of Completion Letter- Ravelston Dykes Bridge Structure Design Package to tie	0d		27-Jun-07 A
	S06 Craigleith Drive Bridge	186d	02-Oct-06 A	27-Jun-07 A
	Craigleith Drive Bridge Structure Detailed Design	186d	02-Oct-06 A	27-Jun-07 A
	Issue Structure Detailed Design Package to CAT II Checker	0d		27-Feb-07 A
	Issue Notification Of Completion Letter- Craigleith Drive Bridge Structure Design Package to tie	0d		27-Jun-07 A
	Detailed Design Resourcing	149d	02-Oct-06 A	23-May-07 A
	S07 Holiday Inn Access Bridge	100d	08-Feb-07 A	27-Jun-07 A
	Holiday Inn Access Bridge Structure Detailed Design	100d	08-Feb-07 A	27-Jun-07 A
	Issue Structure Detailed Design Package to CAT I Checker	0d		08-Feb-07 A
	Structure CAT I Check	6d	08-Feb-07 A	15-Feb-07 A
	Receive and Incoporate CAT I Comments	6d	16-Feb-07 A	23-Feb-07 A
	Issue Notification Of Completion Letter- Holiday Inn Access Bridge Structure Design Package to tie	0d		27-Jun-07 A
	S08 Queensferry Road Bridge	100d	08-Feb-07 A	27-Jun-07 A
	Queensferry Road Bridge Structure Detailed Design	100d	08-Feb-07 A	27-Jun-07 A
	Issue Structure Detailed Design Package to CAT I Checker	0d		08-Feb-07 A
	Structure CAT I Check	6d	08-Feb-07 A	15-Feb-07 A
	Receive and Incoporate CAT I Comments	6d	16-Feb-07 A	23-Feb-07 A
	Issue Notification Of Completion Letter- Queensferry Road Bridge Structure Design Package to tie	0d		27-Jun-07 A
	CRA - WGH	137d	19-Jan-07 A	30-Jul-07 A
	Tram Stop Telford Road (Task500.2.9)	137d	19-Jan-07 A	30-Jul-07 A
	Issue Notification Of Completion Letter- Telford Road Tram Stop Design to tie	0d		30-Jul-07 A
	Site Visit with tie & CEC To Review Preliminary Design	1d	19-Jan-07 A	19-Jan-07 A
	Structures	110d	24-Jan-07 A	27-Jun-07 A
	S09 Groathill Road South Bridge	86d	27-Feb-07 A	27-Jun-07 A
	Groathill Road South Bridge Structure Detailed Design	86d	27-Feb-07 A	27-Jun-07 A
	Issue Structure Detailed Design Package to CAT II Checker	0d		27-Feb-07 A
	Structure CAT II Check	59d	28-Feb-07 A	31-May-07 A
	Receive and Incoporate CAT II Comments	42d	26-Mar-07 A	31-May-07 A
	Issue Notification Of Completion Letter- Groathill Road South Bridge Structure Design Package to tie	0d		27-Jun-07 A
	S10 Telford Road Bridge	110d	24-Jan-07 A	27-Jun-07 A
	Telford Road Bridge Structure Detailed Design	110d	24-Jan-07 A	27-Jun-07 A
	Issue Structure Detailed Design Package to CAT I Checker	0d		24-Jan-07 A
	Structure CAT I Check	9d	25-Jan-07 A	07-Feb-07 A
	Receive and Incoporate CAT I Comments	9d	08-Feb-07 A	21-Feb-07 A
	Issue Notification Of Completion Letter- Telford Road Bridge Structure Design Package to tie	0d		27-Jun-07 A
	Tram South Groathill Avenue Substation (Task500.2.10)	0d	30-Jul-07 A	30-Jul-07 A
	Issue Notification Of Completion Letter- Tram South Groathill Avenue Substation Design to tie for Approval	0d		30-Jul-07 A
	WGH - CRT	223d	12-Sep-06 A	30-Jul-07 A
	Tram Stop Crewe Toll for Western General Hospital (Task500.2.11)	223d	12-Sep-06 A	30-Jul-07 A
	Issue Notification Of Completion Letter- Crewe Toll for Western General Hospital Tram Stop Design to tie	0d		30-Jul-07 A
	Site Visit with tie & CEC To Review Preliminary Design	1d	12-Sep-06 A	12-Sep-06 A
	tie Approval Period	19d	12-Mar-07 A	10-Apr-07 A
	CRT - CAP - Section 3B (Task500.3)	356d	22-Dec-06 A	22-May-08
	Sub Section Wide	356d	22-Dec-06 A	22-May-08
	Sub Section Wide IDC	20d	29-Jan-08	25-Feb-08
	Subsection Wide IDC	19d	29-Jan-08	25-Feb-08
	Consents & Approvals	317d	26-Feb-07 A	22-May-08
	Prior Approvals	315d	26-Feb-07 A	21-May-08
	Combined Section Prior Approval	60d	27-Feb-08	21-May-08
	Issue Combined Package 3B for Prior Approval to CEC	0d		27-Feb-08
	Receive Combined Package 3B Comments From CEC	0d		23-Apr-08
	Prior Approval Granted for Section 3B Combined Package	0d		21-May-08
	CEC Approval Period - 3B Combined Package	38d	27-Feb-08	23-Apr-08
	Update 3B Combined Package to CEC Comments	19d	23-Apr-08	21-May-08
	Batch 3/15	40d	23-Jan-08	19-Mar-08
	Batch 3/15 Formal Approval Period	38d	23-Jan-08	18-Mar-08
	Issue Batch 3/15 For Approval to CEC	0d	23-Jan-08*	
	Receive CEC Prior Approval For Batch 3/15	0d	19-Mar-08	
	Batch 3/16	42d	27-Feb-08	25-Apr-08
	Batch 3/16 Formal Approval Period	38d	27-Feb-08	24-Apr-08
	Issue Batch 3/16 For Approval to CEC	0d	27-Feb-08	

USB00000084_0016

Activity ID	Activity Name	Original Duration	Start	Finish
	Receive CEC Prior Approval For Batch 3/16	0d	25-Apr-08	
	Batch 3/17	75d	19-Jun-07 A	01-Oct-07 A
	Issue Tram Granton Mains East 15 Substation Design for Prior Approval	0d		10-Aug-07 A
	Prior Approval For Tram Granton Mains East 15 Substation	0d		01-Oct-07 A
	Receive Tram Granton Mains East 15 Substation CEC Comments	0d		01-Oct-07 A
	Batch 3/17 Granton Mains East Substation - Informal Consultation	35d	19-Jun-07 A	08-Aug-07 A
	Tram Granton Mains East 15 Substation CEC Approval Period	34d	10-Aug-07 A	01-Oct-07 A
	NO COMMENTS TO INCORPORATE	1d	01-Oct-07 A	01-Oct-07 A
	Batch 3/18	33d	10-Aug-07 A	25-Sep-07 A
	Batch 3/18 Formal Approval Period	30d	10-Aug-07 A	25-Sep-07 A
	Issue Batch 3/18 For Approval to CEC	0d	10-Aug-07 A	
	Receive CEC Prior Approval For Batch 3/18	0d	25-Sep-07 A	
	Batch 3/19	61d	10-Oct-07 A	14-Jan-08
	Batch 3/19 Formal Approval Period	38d	10-Oct-07 A	04-Dec-07 A
	Issue Batch 3/19 For Approval to CEC	0d	11-Oct-07 A	
	Receive CEC Prior Approval For Batch 3/19	0d	14-Jan-08*	
	Roads, Track, OLE, Landscaping, Street Lighting	42d	26-Feb-07 A	24-Apr-07 A
	Informal Consultation With CEC & tie Over Prior Approval for Roads, Track, OLE, Landscaping and Street Lighting	38d	26-Feb-07 A	24-Apr-07 A
	Tram Stop West Pilton	41d	11-May-07 A	06-Jul-07 A
	Informal Consultation With CEC & tie over Prior Approval Tram Stop West Pilton	38d	11-May-07 A	06-Jul-07 A
	Tram Stop Caroline Park	44d	03-Apr-07 A	01-Jun-07 A
	Informal Consultation With CEC & tie over Prior Approval Tram Stop Caroline Park	38d	03-Apr-07 A	01-Jun-07 A
	Technical Approvals	292d	02-Apr-07 A	22-May-08
	Crewe Road Gardens Bridge Review Period (TAA)	119d	08-May-07 A	19-Oct-07 A
	Issue Crewe Road Gardens Design Package to TAA	0d		14-Jun-07 A
	TAA Crewe Road Gardens Design Package Review Period	38d	15-Jun-07 A	09-Aug-07 A
	Receive Crewe Road Gardens Design Package Comments from TAA	0d		05-Oct-07 A
	Incorporate TAA Comments into Crewe Road Gardens Design Package	9d	08-Oct-07 A	19-Oct-07 A
	Commence Crewe Road Gardens Informal Consultation With CEC Over Technical Approval	25d	08-May-07 A	14-Jun-07 A
	Roads Technical Approval	292d	02-Apr-07 A	22-May-08
	Issue Roads Design to Roads Authority for Approval	0d		25-Feb-08
	Roads Authority Approval Period	38d	26-Feb-08	23-Apr-08
	Receive Roads Authority Comments	0d		23-Apr-08
	Update to Roads Authority Comments	19d	24-Apr-08	22-May-08
	Roads Authority Informal Consultation	38d	02-Apr-07 A	31-May-07 A
	Roads Technical Approval Granted	0d		22-May-08
	Drainage Technical Approval	276d	02-Apr-07 A	30-Apr-08
	Roads Authority Informal Consultation For Drainage	38d	02-Apr-07 A	31-May-07 A
	Issue Drainage Design to Roads Authority for Approval	0d		25-Feb-08
	Roads Authority Approval Period For Drainage	38d	26-Feb-08	23-Apr-08
	Receive Roads Authority Comments For Drainage	0d		23-Apr-08
	Update to Roads Authority Comments For Drainage	5d	24-Apr-08	30-Apr-08
	Drainage Technical Approval Granted	0d		30-Apr-08
	Roads, Street Lighting & Landscaping (Task500.3.2)	90d	26-Apr-07 A	30-Aug-07 A
	Issue Roads Design to tie for Approval Section 3B	0d		26-Apr-07 A
	Issue Notification Of Completion Letter- Hard & Soft Landscaping Design to tie Section 3B	0d		30-Aug-07 A
	Issue Notification Of Completion Letter- Street Lighting Design (Inc. Any OLE Combined Pole Design) to tie Section 3B	0d		26-Apr-07 A
	Track (Task 500.3.1)	30d	09-Mar-07 A	20-Apr-07 A
	Issue Track Alignment Design to tie Section 3B	0d		09-Mar-07 A
	Receive tie Comments	0d		20-Apr-07 A
	Drainage	70d	11-Oct-07 A	28-Jan-08
	Issue Drainage Design Completion Letter to tie for Approval Section 3B	0d		11-Oct-07 A
	Issue Drainage Design Completion Letter to tie for Approval Section 3B	0d		28-Jan-08
	Utilities Plates 24 to 33	261d	22-Dec-06 A	14-Jan-08
	Issue to SUCs	0d		22-Dec-06 A
	SUCs Approval	243d	22-Dec-06 A	14-Jan-08
	Boundary & Accomodation Works (Task500.3.3)	0d	03-Aug-07 A	03-Aug-07 A
	Issue Notification Of Completion Letter- Detailed Design of Boundary & Accomodation Works Section 3B	0d		03-Aug-07 A
	CRT - WGA	123d	12-Mar-07 A	30-Aug-07 A
	Tram Stop West Pilton (Task500.3.7)	44d	02-Jul-07 A	30-Aug-07 A
	Issue Notification Of Completion Letter- West Pilton Tram Stop Design to tie	0d		30-Aug-07 A
	Site Visit with tie & CEC To Review Preliminary Design	1d	02-Jul-07 A	02-Jul-07 A
	Structures	77d	12-Mar-07 A	27-Jun-07 A
	S12 Crewe Road Gardens Bridge	77d	12-Mar-07 A	27-Jun-07 A
	Crewe Road Gardens Bridge Superstructure Detailed Design	77d	12-Mar-07 A	27-Jun-07 A
	Issue Superstructure Detailed Design Package to CAT II Checker	0d		12-Mar-07 A
	Superstructure CAT II Check	23d	19-Mar-07 A	23-Apr-07 A
	Receive and Incoporate CAT II Comments	5d	24-Apr-07 A	30-Apr-07 A
	Issue Notification Of Completion Letter- Crewe Road Gardens Bridge Superstructure Design Package to tie	0d		27-Jun-07 A
	Crewe Road Gardens Bridge Substructure Detailed Design	63d	30-Mar-07 A	27-Jun-07 A
	Issue Substructure Detailed Design Package to CAT II Checker	0d		30-Mar-07 A
	Substructure CAT II Check	16d	02-Apr-07 A	26-Apr-07 A
	Receive and Incorporate CAT II Comments	6d	27-Apr-07 A	04-May-07 A
	Issue Notification Of Completion Letter- Crewe Road Gardens Bridge Substructure Detailed Design Package to tie	0d		27-Jun-07 A
	WGA - CAP	39d	02-Jul-07 A	23-Aug-07 A
	Tram Stop Caroline Park (Task500.3.8)	21d	02-Jul-07 A	30-Jul-07 A

Activity ID	Activity Name	Original Duration	Start	Finish
	Issue Notification Of Completion Letter- Caroline Park Tram Stop Design to tie	0d		30-Jul-07 A
	Site Visit with tie & CEC To Review Preliminary Design	1d	02-Jul-07 A	02-Jul-07 A
	Tram Granton Mains East 15 Substation (Task500.3.9)	0d	23-Aug-07 A	23-Aug-07 A
	Issue Notification Of Completion Letter- Tram Granton Mains East 15 Substation Planning Submission to tie for Appro	0d		23-Aug-07 A
	CAP - GRS - Section 3C (Task500.4)	319d	22-Feb-07 A	22-May-08
	Sub Section Wide	319d	22-Feb-07 A	22-May-08
	Sub Section Wide IDC	20d	29-Jan-08	25-Feb-08
	Subsection Wide IDC	19d	29-Jan-08	25-Feb-08
	Consents & Approvals	270d	02-May-07 A	22-May-08
	Prior Approvals	265d	03-May-07 A	19-May-08
	Combined Section Prior Approval	60d	25-Feb-08	19-May-08
	Issue Combined Package 3C for Prior Approval to CEC	0d		25-Feb-08
	Receive Combined Package 3C Comments From CEC	0d		21-Apr-08
	Prior Approval Granted for Section 3C Combined Package	0d		19-May-08
	CEC Approval Period - 3C Combined Package	38d	25-Feb-08	21-Apr-08
	Update 3C Combined Package to CEC Comments	19d	21-Apr-08	19-May-08
	Batch 3/20	42d	25-Feb-08	23-Apr-08
	Batch 3/20 Formal Approval Period	38d	25-Feb-08	22-Apr-08
	Issue Batch 3/20 For Approval to CEC	0d	25-Feb-08	
	Receive CEC Prior Approval For Batch 3/20	0d	23-Apr-08	
	Batch 3/21	42d	25-Feb-08	23-Apr-08
	Batch 3/21 Formal Approval Period	38d	25-Feb-08	22-Apr-08
	Issue Batch 3/21 For Approval to CEC	0d	25-Feb-08	
	Receive CEC Prior Approval For Batch 3/21	0d	23-Apr-08	
	Batch 3/22 Tram Granton View Substation	108d	06-Aug-07 A	14-Jan-08
	Issue Tram Granton View Substation Design for Prior Approval	0d		31-Oct-07 A
	Prior Approval For Tram Granton Road Substation	0d		14-Jan-08
	Informal Consultation With CEC & tie over Prior Approval Tram Granton View Substation	38d	06-Aug-07 A	01-Oct-07 A
	Batch 3/22 Formal Approval Period	38d	31-Oct-07 A	02-Jan-08 A
	Roads, Track, OLE, Landscaping, Street Lighting	42d	03-May-07 A	29-Jun-07 A
	Informal Consultation With CEC & tie Over Prior Approval for Roads, Track, OLE, Landscaping and Street Lighting	38d	03-May-07 A	29-Jun-07 A
	Tram Stop Saltire Square	40d	14-Jan-08	07-Mar-08
	Informal Consultation With CEC & tie over Prior Approval Tram Stop Saltire Square	38d	14-Jan-08	07-Mar-08
	Tram Stop Granton	40d	14-Jan-08	07-Mar-08
	Informal Consultation With CEC & tie over Prior Approval Tram Stop Granton	38d	14-Jan-08	07-Mar-08
	Technical Approvals	270d	02-May-07 A	22-May-08
	Roads Technical Approval	270d	02-May-07 A	22-May-08
	Issue Roads Design to Roads Authority for Approval	0d		25-Feb-08
	Roads Authority Approval Period	38d	26-Feb-08	23-Apr-08
	Receive Roads Authority Comments	0d		23-Apr-08
	Update to Roads Authority Comments	19d	24-Apr-08	22-May-08
	Roads Authority Informal Consultation	38d	02-May-07 A	28-Jun-07 A
	Roads Technical Approval Granted	0d		22-May-08
	Drainage Technical Approval	78d	14-Jan-08	30-Apr-08
	Roads Authority Informal Consultation For Drainage	38d	14-Jan-08	07-Mar-08
	Issue Drainage Design to Roads Authority for Approval	0d		25-Feb-08
	Roads Authority Approval Period For Drainage	38d	26-Feb-08	23-Apr-08
	Receive Roads Authority Comments For Drainage	0d		23-Apr-08
	Update to Roads Authority Comments For Drainage	5d	24-Apr-08	30-Apr-08
	Drainage Technical Approval Granted	0d		30-Apr-08
	Track (Task500.4.1)	0d	15-Jun-07 A	15-Jun-07 A
	Issue Notification Of Completion Letter- Track Alignment Design to tie Section 3C	0d		15-Jun-07 A
	Roads, Street Lighting & Landscaping (Task500.4.2)	59d	02-Jul-07 A	21-Sep-07 A
	Issue Notification Of Completion Letter- Roads Design to tie for Approval Section 3C	0d		02-Jul-07 A
	Issue Notification Of Completion Letter- Hard & Soft Landscaping Design to tie Section 3C	0d		21-Sep-07 A
	Issue Notification Of Completion Letter- Street Lighting Design (Inc. Any OLE Combined Pole Design) to tie Section 3C	0d		16-Aug-07 A
	Drainage	70d	11-Oct-07 A	28-Jan-08
	Issue Drainage Design Completion Letter to tie for Approval Section 3C	0d		11-Oct-07 A
	Issue Drainage Design Completion Letter to tie for Approval Section 3C	0d		28-Jan-08
	Boundary & Accomodation Works (Task500.4.3)	0d	31-Aug-07 A	31-Aug-07 A
	Issue Notification Of Completion Letter- Detailed Design of Boundary & Accomodation Works Section 3C	0d		31-Aug-07 A
	Utilities Plates 34 to 42	132d	22-Feb-07 A	27-Aug-07 A
	Issue to SUCs	0d		22-Feb-07 A
	SUCs Approval	120d	22-Feb-07 A	27-Aug-07 A
	CAP - GRW	116d	02-Jul-07 A	10-Dec-07 A
	Tram Stop Saltire Square (Task500.4.7)	116d	02-Jul-07 A	10-Dec-07 A
	Issue Notification Of Completion Letter- Saltire Square Tram Stop Design to tie	0d		10-Dec-07 A
	Site Visit with tie & CEC To Review Preliminary Design	1d	02-Jul-07 A	02-Jul-07 A
	Tram Granton View Substation (Task500.4.10)	0d	10-Dec-07 A	10-Dec-07 A
	Issue Notification Of Completion Letter- Tram Granton View Substation Planning Submission to tie for Approval	0d		10-Dec-07 A
	GRW - GRS	116d	02-Jul-07 A	10-Dec-07 A
	Tram Stop Granton (Task500.4.9)	116d	02-Jul-07 A	10-Dec-07 A
	Issue Notification Of Completion Letter- Granton Tram Stop Design to tie	0d		10-Dec-07 A
	Site Visit with tie & CEC To Review Preliminary Design	1d	02-Jul-07 A	02-Jul-07 A
	Roseburn Junction to Gogarburn - Section 5 (Task700)	559d	02-Aug-06 A	10-Oct-08
	Section Wide - Section 5	136d	13-Apr-07 A	22-Oct-07 A

Activity ID	Activity Name	Original Duration	Start	Finish
	Section Wide	136d	13-Apr-07 A	22-Oct-07 A
	OLE (Task700.1)	136d	13-Apr-07 A	22-Oct-07 A
	(NOT REQUIRED) Re-issue Notification Of Completion Letter- Final Detailed Layout Plans & Standard & Special Cross	0d		22-Oct-07 A
	Issue Notification Of Completion Letter- Final Detailed Layout Plans & Standard & Special Cross Section to tie Sec 5B	0d		13-Apr-07 A
	ROJ - BAR - Section 5A (Task700.2)	559d	02-Aug-06 A	10-Oct-08
	Sub Section Wide	479d	22-Nov-06 A	10-Oct-08
	Sub Section Wide IDC	22d	10-Mar-08	08-Apr-08
	Subsection Wide IDC	21d	10-Mar-08	08-Apr-08
	Consents & Approvals	479d	22-Nov-06 A	10-Oct-08
	Prior Approvals	408d	22-Nov-06 A	03-Jul-08
	Combined Section Prior Approval	60d	28-Mar-08	20-Jun-08
	Issue Combined Package 5A for Prior Approval to CEC	0d		28-Mar-08
	Receive Combined Package 5A Comments From CEC	0d		23-May-08
	Prior Approval Granted for Section 5A Combined Package	0d		20-Jun-08
	CEC Approval Period - 5A Combined Package	38d	28-Mar-08	23-May-08
	Update 5A Combined Package to CEC Comments	19d	23-May-08	20-Jun-08
	Batch 5/05	42d	15-Feb-08	15-Apr-08
	Batch 5/05 Formal Approval Period	38d	15-Feb-08	14-Apr-08
	Issue Batch 5/05 For Approval to CEC	0d	15-Feb-08	
	Receive CEC Prior Approval For Batch 5/05	0d	15-Apr-08	
	Batch 5/06	42d	03-Mar-08	30-Apr-08
	Batch 5/06 Formal Approval Period	38d	03-Mar-08	29-Apr-08
	Issue Batch 5/06 For Approval to CEC	0d	03-Mar-08	
	Receive CEC Prior Approval For Batch 5/06	0d	30-Apr-08	
	Batch 5/07	42d	28-Mar-08	27-May-08
	Batch 5/07 Formal Approval Period	38d	28-Mar-08	23-May-08
	Issue Batch 5/07 For Approval to CEC ON HOLD AWAITING TIE DECISION	0d	28-Mar-08	
	Receive CEC Prior Approval For Batch 5/07	0d	27-May-08	
	Batch 5/08	43d	10-Mar-08	08-May-08
	Batch 5/08 Formal Approval Period	38d	10-Mar-08	07-May-08
	Issue Batch 5/08 For Approval to CEC	0d	10-Mar-08	
	Receive CEC Prior Approval For Batch 5/08	0d	08-May-08	
	Batch 5/10	42d	25-Feb-08	23-Apr-08
	Batch 5/10 Formal Approval Period	38d	25-Feb-08	22-Apr-08
	Issue Batch 5/10 For Approval to CEC	0d	25-Feb-08	
	Receive CEC Prior Approval For Batch 5/10	0d	23-Apr-08	
	Roads, Track, OLE, Landscaping, Street Lighting	42d	21-Feb-07 A	19-Apr-07 A
	Informal Consultation With CEC & tie Over Prior Approval for Roads, Track, OLE, Landscaping and Street Lighting	38d	21-Feb-07 A	19-Apr-07 A
	Russell Road Retaining Wall One	73d	27-Sep-07 A	16-Jan-08
	Commence Russell Road RW One Informal Consultation With CEC & tie Over Prior Approval	69d	27-Sep-07 A	16-Jan-08
	Russell Road Retaining Wall Two	73d	27-Sep-07 A	16-Jan-08
	Commence Russell Road RW Two Informal Consultation With CEC & tie Over Prior Approval	69d	27-Sep-07 A	16-Jan-08
	Murrayfield Stop Retaining Walls	41d	30-Jul-07 A	24-Sep-07 A
	Commence Murrayfield Stop RW Informal Consultation With CEC & tie Over Prior Approval	38d	30-Jul-07 A	24-Sep-07 A
	Tram Stop Murrayfield Stadium	40d	22-Nov-06 A	25-Jan-07 A
	Informal Consultation With CEC & tie over Prior Approval Tram Stop Murrayfield Stadium	38d	22-Nov-06 A	25-Jan-07 A
	Roseburn Street Viaduct Superstructure	40d	14-Jan-08	07-Mar-08
	Commence Roseburn Street Viaduct Informal Consultation With CEC & tie Over Prior Approval	38d	14-Jan-08	07-Mar-08
	Murrayfield Stadium Retaining Wall	92d	28-Aug-07 A	14-Jan-08
	Commence Murrayfield Stadium RW Informal Consultation With CEC & tie Over Prior Approval	87d	28-Aug-07 A	14-Jan-08
	Murrayfield Underpass Superstructure	40d	14-Jan-08	07-Mar-08
	Commence Murrayfield Underpass Informal Consultation With CEC & tie Over Prior Approval	38d	14-Jan-08	07-Mar-08
	Murrayfield Training Pitches Retaining Wall	42d	08-Feb-08	07-Apr-08
	Commence Murrayfield Training Pitches Informal Consultation With CEC & tie Over Prior Approval	38d	08-Feb-08	07-Apr-08
	Water of Leith Bridge Superstructure	70d	15-Oct-07 A	29-Jan-08
	Commence Water of Leith Structure Informal Consultation With CEC & tie Over Prior Approval	67d	15-Oct-07 A	29-Jan-08
	Baird Drive Retaining Wall	42d	15-Feb-08	14-Apr-08
	Commence Baird Drive RW Informal Consultation With CEC & tie Over Prior Approval	38d	15-Feb-08	14-Apr-08
	Balgreen Road Bridge Superstructure	41d	08-May-08	03-Jul-08
	Commence Balgreen Road Bridge Informal Consultation With CEC & tie Over Prior Approval	38d	08-May-08	03-Jul-08
	Balgreen Road Retaining Wall	42d	10-Apr-08	06-Jun-08
	Commence Balgreen Road RW Informal Consultation With CEC & tie Over Prior Approval	38d	10-Apr-08	06-Jun-08
	VO71 Accomodation Works at Murrayfield (Not tie Approved)	40d	02-Jul-07 A	24-Aug-07 A
	Planning Permission Boundary & Accomodation Works Murrayfield Stadium	40d	02-Jul-07 A	24-Aug-07 A
	Informal Consultation With CEC & tie Over Planning Permission Murrayfield Stadium Boundary & Accomodation Works	38d	02-Jul-07 A	24-Aug-07 A
	Technnical Approvals	421d	21-Feb-07 A	10-Oct-08
	Russell Road Retaining Wall One Review Period (TAA)	92d	11-Sep-07 A	25-Jan-08
	Issue Russell Road RW One Design Package to TAA	0d	06-Nov-07 A	
	TAA Russell Road RW One Design Package Review Period	28d	06-Nov-07 A	17-Dec-07 A
	Receive Russell Road RW One Design Package comments from TAA	0d	14-Jan-08	
	Incorporate TAA comments into Russell Road RW One Design Package	9d	14-Jan-08	25-Jan-08
	Commence Russell Road RW One Informal Consultation With CEC Over Technical Approval	38d	11-Sep-07 A	05-Nov-07 A
	Russell Road Retaining Wall One Review Period (ScotRail)	30d	09-Jan-08 A	19-Feb-08
	Issue Design and Check Certificate to Network Rail For Comment	0d	09-Jan-08 A	
	Network Rail Comment Period	19d	09-Jan-08 A	05-Feb-08
	Receive Network Rail Comments	0d	06-Feb-08	

USB00000084_0019

Activity ID	Activity Name	Original Duration	Start	Finish
	Incorporate First Scot Rail comments into Structure Design Package	9d	06-Feb-08	19-Feb-08
	Murrayfield Stop Retaining Walls Structure Review (TAA)	178d	13-Aug-07 A	28-Apr-08
	Issue Murrayfield Stop RW Detailed Design Package to TAA	0d		18-Feb-08
	Incorporate Murrayfield Stop RW TAA Comments	9d	15-Apr-08	28-Apr-08
	Murrayfield Stop RW TAA Review Period	38d	18-Feb-08	15-Apr-08
	Receive Murrayfield Stop RW TAA Comments	0d		15-Apr-08
	Commence Murrayfield Stop RW Informal Consultation With CEC Over Technical Approval	38d	13-Aug-07 A	09-Oct-07 A
	Russell Road Retaining Wall Two Review Period (TAA)	92d	11-Sep-07 A	25-Jan-08
	Issue Russell Road RW Two Design Package to TAA	0d	22-Nov-07 A	
	TAA Russell Road RW Two Design Package Review Period	28d	22-Nov-07 A	10-Jan-08 A
	Receive Russell Road RW Two Design Package comments from TAA	0d	14-Jan-08	
	Incorporate TAA comments into Russell Road RW Two Design Package	9d	14-Jan-08	25-Jan-08
	Commence Russell Road RW Two Informal Consultation With CEC Over Technical Approval	49d	11-Sep-07 A	21-Nov-07 A
	Russell Road Retaining Wall Two Review Period (ScotRail)	30d	28-Jan-08	07-Mar-08
	Issue Design and Check Certificate to Network Rail For Comment	0d	28-Jan-08	
	Network Rail Comment Period	19d	28-Jan-08	22-Feb-08
	Receive Network Rail Comments	0d	25-Feb-08	
	Incorporate First Scot Rail comments into Structure Design Package	9d	25-Feb-08	07-Mar-08
	Roseburn Street Viaduct Review (TAA)	99d	26-Nov-07 A	21-Apr-08
	Roseburn Street Viaduct TAA Review Period	38d	11-Feb-08	08-Apr-08
	Issue Roseburn Street Viaduct Detailed Design Package to TAA	0d		11-Feb-08*
	Incorporate Roseburn Street Viaduct TAA Comments	9d	08-Apr-08	21-Apr-08
	Receive Roseburn Street Viaduct TAA Comments	0d		08-Apr-08
	Commence Roseburn Street Viaduct Informal Consultation With CEC Over Technical Approval	47d	26-Nov-07 A	11-Feb-08
	Murrayfield Stadium Retaining Wall Structure Review (TAA)	217d	06-Jul-07 A	14-May-08
	Issue Murrayfield Stadium Retaining Wall Detailed Design Package to TAA	0d		29-Feb-08
	TAA Murrayfield Stadium Retaining Wall Review Period	38d	03-Mar-08	29-Apr-08
	Receive Murrayfield Stadium Retaining Wall TAA Comments	0d		29-Apr-08
	Incorporate Murrayfield Stadium Retaining Wall TAA Comments	9d	30-Apr-08	14-May-08
	Commence Murrayfield Stadium RW Informal Consultation With CEC Over Technical Approval	154d	06-Jul-07 A	29-Feb-08
	Murrayfield Stadium Retaining Wall Structure Review (Network Rail)	42d	29-Feb-08	29-Apr-08
	Issue Murrayfield Stadium RW Design and Check Certificate to Network Rail For Comment	0d		29-Feb-08
	Murrayfield Stadium RW Network Rail Comment Period	19d	03-Mar-08	01-Apr-08
	Receive Murrayfield Stadium RW Network Rail Comments	0d		01-Apr-08
	Incorporate Murrayfield Stadium RW Network Rail Comments	19d	02-Apr-08	29-Apr-08
	Murrayfield Underpass Superstructure Review (TAA)	181d	27-Jul-07 A	15-Apr-08
	Issue Murrayfield Underpass Detailed Design Package to TAA	0d		29-Feb-08*
	TAA Murrayfield Underpass Review Period	19d	03-Mar-08	01-Apr-08
	Receive Murrayfield Underpass TAA Comments	0d		01-Apr-08
	Incorporate Murrayfield Underpass TAA Comments	9d	02-Apr-08	15-Apr-08
	Commence Murrayfield Underpass Informal Consultation With CEC Over Technical Approval	38d	27-Jul-07 A	24-Sep-07 A
	Murrayfield Underpass Superstructure Review (Network Rail)	42d	29-Feb-08	29-Apr-08
	Issue Murrayfield Underpass Design and Check Certificate to Network Rail For Comment	0d		29-Feb-08
	Murrayfield Underpass Network Rail Comment Period	19d	03-Mar-08	01-Apr-08
	Receive Murrayfield Underpass Network Rail Comments	0d		01-Apr-08
	Incorporate Murrayfield Underpass Network Rail Comments	19d	02-Apr-08	29-Apr-08
	Murrayfield Training Pitches Retaining Wall Structure Review (TAA)	73d	08-Feb-08	20-May-08
	Issue Murrayfield Training Pitches Detailed Design Package to TAA	0d		07-Apr-08
	Murrayfield Training Pitches TAA Review Period	19d	08-Apr-08	06-May-08
	Receive Murrayfield Training Pitches TAA Comments	0d		06-May-08
	Incorporate Murrayfield Training Pitches TAA Comments	9d	07-May-08	20-May-08
	Commence Murrayfield Training Pitches Informal Consultation With CEC Over Technical Approval	38d	08-Feb-08	07-Apr-08
	Murrayfield Training Pitches Retaining Wall Structure Review (Network Rail)	41d	20-May-08	16-Jul-08
	Issue Murrayfield Training Pitches Design and Check Certificate to Network Rail For Comment	0d		20-May-08
	Murrayfield Training Pitches Network Rail Comment Period	19d	21-May-08	18-Jun-08
	Receive Murrayfield Training Pitches Network Rail Comments	0d		18-Jun-08
	Incorporate Murrayfield Training Pitches Network Rail Comments	19d	19-Jun-08	16-Jul-08
	Water of Leith Bridge Review (TAA)	95d	22-Oct-07 A	11-Mar-08
	Issue Water of Leith Bridge Detailed Design Package to TAA	0d		29-Jan-08
	Water of Leith Bridge TAA Review Period	19d	30-Jan-08	26-Feb-08
	Receive Water of Leith Bridge TAA Comments	0d		26-Feb-08
	Incorporate Water of Leith Bridge TAA Comments	9d	27-Feb-08	11-Mar-08
	Commence Water of Leith Informal Consultation With CEC Over Technical Approval	62d	22-Oct-07 A	29-Jan-08
	Balgreen Road Bridge Review (TAA)	71d	08-May-08	14-Aug-08
	Issue Balgreen Road Bridge Detailed Design Package to TAA	0d		03-Jul-08
	Balgreen Road Bridge TAA Review Period	19d	04-Jul-08	31-Jul-08
	Receive Balgreen Road Bridge TAA Comments	0d		31-Jul-08
	Incorporate Balgreen Road Bridge TAA Comments	9d	01-Aug-08	14-Aug-08
	Commence Balgreen Road Bridge Informal Consultation With CEC Over Technical Approval	38d	08-May-08	03-Jul-08
	Balgreen Road Bridge Review (Network Rail)	41d	14-Aug-08	10-Oct-08
	Issue Balgreen Road Bridge Design and Check Certificate to Network Rail For Comment	0d		14-Aug-08
	Balgreen Road Bridge Network Rail Comment Period	19d	15-Aug-08	12-Sep-08
	Receive Balgreen Road Bridge Network Rail Comments	0d		12-Sep-08
	Incorporate Balgreen Road Bridge Network Rail Comments	19d	15-Sep-08	10-Oct-08
	Baird Drive Retaining Wall Structure Review (TAA)	74d	15-Feb-08	28-May-08
	Issue Baird Drive RW Detailed Design Package to TAA	0d		14-Apr-08

USB00000084_0020

Activity ID	Activity Name	Original Duration	Start	Finish
	Baird Drive RW TAA Review Period	19d	15-Apr-08	13-May-08
	Receive Baird Drive RW TAA Comments	0d		13-May-08
	Incorporate Baird Drive RW TAA Comments	9d	14-May-08	28-May-08
	Commence Baird Drive RW Informal Consultation With CEC Over Technical Approval	38d	15-Feb-08	14-Apr-08
	Baird Drive Retaining Wall Structure Review (Network Rail)	40d	28-May-08	23-Jul-08
	Issue Baird Drive RW Design and Check Certificate to Network Rail For Comment	0d		28-May-08
	Baird Drive RW Network Rail Comment Period	19d	29-May-08	25-Jun-08
	Receive Baird Drive RW Network Rail Comments	0d		25-Jun-08
	Incorporate Baird Drive RW Network Rail Comments	19d	26-Jun-08	23-Jul-08
	Balgreen Road Retaining Wall Structure Review (TAA)	72d	10-Apr-08	18-Jul-08
	Issue Balgreen Road RW Detailed Design Package to TAA	0d		06-Jun-08
	Balgreen Road RW TAA Review Period	19d	09-Jun-08	04-Jul-08
	Receive Balgreen Road RW TAA Comments	0d		04-Jul-08
	Incorporate Balgreen Road RW TAA Comments	9d	07-Jul-08	18-Jul-08
	Commence Balgreen Road RW Informal Consultation With CEC Over Technical Approval	38d	10-Apr-08	06-Jun-08
	Balgreen Road Retaining Wall Structure Review (Network Rail)	41d	18-Jul-08	15-Sep-08
	Issue Balgreen Road RW Design and Check Certificate to Network Rail For Comment	0d		18-Jul-08
	Balgreen Road RW Network Rail Comment Period	19d	21-Jul-08	15-Aug-08
	Receive Balgreen Road RW Network Rail Comments	0d		15-Aug-08
	Incorporate Balgreen Road RW Network Rail Comments	19d	18-Aug-08	15-Sep-08
	Roads Technical Approval	350d	21-Feb-07 A	03-Jul-08
	Issue Roads Design to Roads Authority for Approval	0d		08-Apr-08
	Roads Authority Approval Period	38d	09-Apr-08	05-Jun-08
	Receive Roads Authority Comments	0d		05-Jun-08
	Update to Roads Authority Comments	19d	06-Jun-08	03-Jul-08
	Roads Authority Informal Consultation	38d	21-Feb-07 A	19-Apr-07 A
	Roads Technical Approval Granted	0d		03-Jul-08
	Drainage Technical Approval	110d	11-Jan-08 A	12-Jun-08
	Roads Authority Informal Consultation For Drainage	57d	11-Jan-08 A	08-Apr-08
	Issue Drainage Design to Roads Authority for Approval	0d		08-Apr-08
	Roads Authority Approval Period For Drainage	38d	09-Apr-08	05-Jun-08
	Receive Roads Authority Comments For Drainage	0d		05-Jun-08
	Update to Roads Authority Comments For Drainage	5d	06-Jun-08	12-Jun-08
	Drainage Technical Approval Granted	0d		12-Jun-08
	Track (Task700.2.1)	43d	01-Feb-07 A	03-Apr-07 A
	Issue Track Alignment Design to tie Section 5A	0d		01-Feb-07 A
	tie Approval Period	19d	01-Feb-07 A	28-Feb-07 A
	Receive tie Comments	0d	03-Apr-07 A	
	Roads, Street Lighting & Landscaping (Task700.2.2)	241d	06-Mar-07 A	15-Feb-08
	Issue Roads Design to tie for Approval Section 5A	0d		27-Mar-07 A
	tie Approval Period	19d	27-Mar-07 A	25-Apr-07 A
	Issue Notification Of Completion Letter- Hard & Soft Landscaping Design to tie Section 5A	0d		15-Feb-08
	Issue Street Lighting Design (Inc. Any OLE Combined Pole Design) to tie Section 5A	0d		06-Mar-07 A
	Drainage	83d	10-Oct-07 A	13-Feb-08
	Issue Drainage Design Completion Letter to tie for Approval Section 5A	0d		10-Oct-07 A
	Issue Drainage Design Completion Letter to tie for Approval Section 5A	0d		13-Feb-08
	Boundary & Accomodation Works (Task700.2.3)	182d	04-Dec-06 A	24-Aug-07 A
	Issue Notification Of Completion Letter- Detailed Design of Boundary & Accomodation Works Section 5A	0d		24-Aug-07 A
	VO71 Accomodation Works at Murrayfield (Not tie approved)	102d	04-Dec-06 A	04-May-07 A
	Issue Murrayfield Stadium Boundary & Accomodation Works	0d		04-Dec-06 A
	tie Approval Period	19d	11-Dec-06 A	15-Jan-07 A
	No Comments Received & Now Changed Protocol	0d		04-May-07 A
	Issue Murrayfield Training Pitches Boundary & Accomodation Works	0d		04-Dec-06 A
	tie Approval Period	19d	11-Dec-06 A	15-Jan-07 A
	No Comments Received & Now Changed Protocol	0d		04-May-07 A
	VO163 SRU Cross Sections	0d	29-Jan-07 A	29-Jan-07 A
	Issue Additional Report to tie & SRU	0d		29-Jan-07 A
	Utilities (Task700.2.4)	101d	05-Apr-07 A	27-Aug-07 A
	Issue DD to SUC For Approval	0d		05-Apr-07 A
	SUC Approval Period	91d	06-Apr-07 A	27-Aug-07 A
	RO4 - MUR	330d	02-Aug-06 A	18-Feb-08
	Tram Stop Murrayfield Stadium (Task700.2.6)	333d	02-Aug-06 A	20-Nov-07 A
	Issue Notification Of Completion Letter- Murrayfield Stadium Tram Stop Design to tie	0d		20-Nov-07 A
	Site Visit with tie & CEC To Review Preliminary Design	1d	02-Aug-06 A	02-Aug-06 A
	Issue Murrayfield Stadium Tram Stop Package for Prior Approval to tie	0d		21-Nov-06 A
	tie Approval Period	19d	22-Nov-06 A	19-Dec-06 A
	Receive tie Comments	0d		15-Jan-07 A
	Structures	285d	05-Jan-07 A	18-Feb-08
	W01 Russell Road Retaining Wall One	42d	11-Sep-07 A	07-Nov-07 A
	Structure Detailed Design	42d	11-Sep-07 A	07-Nov-07 A
	Issue Structure Detailed Design Package to CAT I Checker	0d	11-Sep-07 A	
	Structure CAT I Check	19d	11-Sep-07 A	08-Oct-07 A
	Receive & Incorporate CAT I comments	9d	09-Oct-07 A	22-Oct-07 A
	Issue Notification Of Completion Letter- Russell Road Retaining Wall One Structure Design Package to tie	0d		07-Nov-07 A
	W02 Russell Road Retaining Wall Two	42d	25-Sep-07 A	21-Nov-07 A
	Structure Detailed Design	42d	25-Sep-07 A	21-Nov-07 A

USB00000084_0021

Activity ID	Activity Name	Original Duration	Start	Finish
	Issue Structure Detailed Design Package to CAT I Checker	0d	25-Sep-07 A	
	Structure CAT I Check	9d	25-Sep-07 A	08-Oct-07 A
	Receive & Incorporate CAT I comments	9d	09-Oct-07 A	22-Oct-07 A
	Issue Notification Of Completion Letter- Russell Road Retaining Wall Two Structure Design Package to tie	0d		21-Nov-07 A
	W18 Murrayfield Stop Retaining Walls (Task700.2.17)	285d	05-Jan-07 A	18-Feb-08
	Murrayfield Stop Retaining Walls Structure Detailed Design	285d	05-Jan-07 A	18-Feb-08
	Issue Notification Of Completion Letter- Murrayfield Stop Retaining Walls Package to tie for Comments	0d		29-Jan-08
	Issue Detailed Design Package to CAT II or CAT III Checker (as appropriate)	0d	05-Jan-07 A	
	Receive and Incorporate CATII or CATIII Check Comments	9d	05-Feb-08	18-Feb-08
	CAT II Review Period	9d	22-Jan-08	04-Feb-08
	Murrayfield Stop Retaining Walls Preliminary Design Milestones	0d	12-Mar-07 A	12-Mar-07 A
	tie and TAA Sign Off PD	0d		12-Mar-07 A
	MUR - BAR Including Elevated Route	409d	20-Nov-06 A	03-Jul-08
	Structures	409d	20-Nov-06 A	03-Jul-08
	S21A Roseburn Street Viaduct (Task700.2.9)	145d	02-Apr-07 A	19-Oct-07 A
	Roseburn Street Viaduct Superstructure Detailed Design	66d	20-Jul-07 A	19-Oct-07 A
	Issue Notification Of Completion Letter- Roseburn Street Viaduct Superstructure Detailed Design Package to tie	0d		19-Oct-07 A
	Issue Detailed Design Package to CAT III Checker	0d		20-Jul-07 A
	Bridge CAT III Review Period	52d	20-Jul-07 A	05-Oct-07 A
	Receive and Incorporate CATIII Check Comments	20d	17-Sep-07 A	15-Oct-07 A
	Roseburn Street Viaduct Substructure Detailed Design	145d	02-Apr-07 A	19-Oct-07 A
	Issue Notification Of Completion Letter- Roseburn Street Substructure Viaduct Detailed Design Package to tie for co	0d		19-Oct-07 A
	Issue Detailed Design Package to CAT III Checker	0d		02-Apr-07 A
	Bridge CAT III Review Period	4d	02-Apr-07 A	05-Apr-07 A
	Receive and Incorporate CATIII Check Comments	26d	11-Sep-07 A	18-Oct-07 A
	S21B Murrayfield Stadium Retaining Wall (Task700.2.13)	54d	07-Dec-07 A	29-Feb-08
	Murrayfield Stadium Retaining Wall Structure Detailed Design	54d	07-Dec-07 A	29-Feb-08
	Issue Notification Of Completion Letter- Murrayfield Stadium RW Package to tie for Comments	0d		11-Dec-07 A
	Issue Detailed Design Package to CAT II Checker	0d		07-Dec-07 A
	Bridge CATII or CAT III Review Period	10d	07-Dec-07 A	21-Dec-07 A
	Receive and Incorporate CATII Check Comments	42d	21-Dec-07 A	29-Feb-08
	S21C Murrayfield Underpass (Task700.2.14)	188d	08-Jan-07 A	26-Sep-07 A
	Murrayfield Underpass Superstructure Detailed Design	188d	08-Jan-07 A	26-Sep-07 A
	Issue Notification Of Completion Letter- Murrayfield Underpass Superstructure Package to tie	0d		26-Sep-07 A
	Issue Detailed Design Package to CAT II	0d	08-Jan-07 A	
	Bridge CATII Review Period	165d	08-Jan-07 A	17-Sep-07 A
	Receive and Incorporate CATII Check Comments	13d	04-Sep-07 A	21-Sep-07 A
	S21D Murrayfield Training Pitches Retaining Wall (Task700.2.15)	42d	07-Feb-08	07-Apr-08
	Murrayfield Training Pitches Retaining Wall Structure Detailed Design	42d	07-Feb-08	07-Apr-08
	Issue Notification Of Completion Letter- Murrayfield Training Pitches RW Package to tie	0d		07-Apr-08
	Issue Detailed Design Package to CAT II or CAT III Checker (as appropriate)	0d		07-Feb-08*
	Bridge CATII or CAT III Review Period	19d	08-Feb-08	06-Mar-08
	Receive and Incorporate CATII or CATIII Check Comments	9d	07-Mar-08	20-Mar-08
	S21E Water of Leith Bridge (Task700.2.16)	243d	18-Dec-06 A	03-Dec-07 A
	Water of Leith Bridge Substructure Detailed Design	234d	09-Jan-07 A	03-Dec-07 A
	Issue Notification Of Completion Letter- Water of Leith Bridge Detailed Design Package to tie	0d		03-Dec-07 A
	Issue Detailed Design Package to CAT II Checker	0d		09-Jan-07 A
	Water of Leith Bridge Superstructure Detailed Design	204d	18-Dec-06 A	09-Oct-07 A
	Issue Notification Of Completion Letter- Water of Leith Bridge Detailed Design Package to tie	0d		09-Oct-07 A
	Issue Detailed Design Package to CAT II Checker	0d		18-Dec-06 A
	Bridge CATII Review Period	186d	19-Dec-06 A	05-Oct-07 A
	Receive and Incorporate CATII Check Comments	13d	13-Sep-07 A	03-Oct-07 A
	S22 Balgreen Road Bridge (Task700.2.10)	409d	20-Nov-06 A	03-Jul-08
	Balgreen Road Bridge Superstructure Detailed Design	41d	07-May-08	03-Jul-08
	Issue Notification Of Completion Letter- Balgreen Road Bridge Superstructure Package to tie	0d		03-Jul-08
	Issue Detailed Design Package to CAT II or CAT III Checker (as appropriate)	0d		07-May-08
	Bridge CATII or CAT III Review Period	28d	08-May-08	19-Jun-08
	Receive and Incorporate CATII or CATIII Check Comments	9d	20-Jun-08	03-Jul-08
	VO231 Balgreen Road Bridge Preliminary Design Re-Visit	324d	20-Nov-06 A	06-Mar-08
	Receive Network Rail Acceptance	0d		20-Nov-06 A
	Re-issue AIP to TAA	0d		06-Mar-08
	Balgreen Road Bridge Substructure Detailed Design	84d	07-Mar-08	03-Jul-08
	Issue Notification Of Completion Letter- Balgreen Road Bridge Substructure Package to tie	0d		03-Jul-08
	Issue Detailed Design Package to CAT II or CAT III Checker (as appropriate)	0d		07-Mar-08
	Bridge CATII or CAT III Review Period	28d	10-Mar-08	22-Apr-08
	Receive and Incorporate CATII or CATIII Check Comments	9d	23-Apr-08	07-May-08
	W08 Baird Drive Retaining Wall (Task700.2.11)	40d	18-Feb-08	14-Apr-08
	Baird Drive Retaining Wall Structure Detailed Design	40d	18-Feb-08	14-Apr-08
	Issue Notification Of Completion Letter- Baird Drive Retaining Wall Package to tie	0d		14-Apr-08
	Issue Detailed Design Package to CAT II or CAT III Checker (as appropriate)	0d		18-Feb-08
	Bridge CATII or CAT III Review Period	19d	19-Feb-08	17-Mar-08
	Receive and Incorporate CATII or CATIII Check Comments	9d	17-Mar-08	01-Apr-08
	W09 Balgreen Road Retaining Wall (Task700.2.12)	42d	09-Apr-08	06-Jun-08
	Balgreen Road Retaining Wall Structure Detailed Design	42d	09-Apr-08	06-Jun-08
	Issue Notification Of Completion Letter- Balgreen Road Retaining Wall Package to tie	0d		06-Jun-08
	Issue Detailed Design Package to CAT II or CAT III Checker (as appropriate)	0d		09-Apr-08

USB00000084_0022

Activity ID	Activity Name	Original Duration	Start	Finish
	Bridge CATII or CAT III Review Period	19d	10-Apr-08	08-May-08
	Receive CATII or CATIII Check Comments	0d		08-May-08
	Receive and Incorporate CATII or CATIII Check Comments	9d	09-May-08	22-May-08
	BAR - EDP - Section 5B (Task700.3)	463d	20-Sep-06 A	17-Jul-08
	Sub Section Wide	359d	22-Feb-07 A	17-Jul-08
	Sub Section Wide IDC	22d	25-Feb-08	25-Mar-08
	Subsection Wide IDC	21d	25-Feb-08	25-Mar-08
	Consents & Approvals	359d	22-Feb-07 A	17-Jul-08
	Prior Approvals	308d	09-Apr-07 A	24-Jun-08
	Combined Section Prior Approval	60d	01-Apr-08	24-Jun-08
	Issue Combined Package 5B for Prior Approval to CEC	0d		01-Apr-08
	Receive Combined Package 5B Comments From CEC	0d		27-May-08
	Prior Approval Granted for Section 5B Combined Package	0d		24-Jun-08
	CEC Approval Period - 5B Combined Package	38d	01-Apr-08	27-May-08
	Update5B Combined Package to CEC Comments	19d	27-May-08	24-Jun-08
	Batch 5/11	42d	22-Feb-08	22-Apr-08
	Batch 5/11 Formal Approval Period	38d	22-Feb-08	21-Apr-08
	Issue Batch 5/11 For Approval to CEC	0d	22-Feb-08	
	Receive CEC Prior Approval For Batch 5/11	0d	22-Apr-08	
	Batch 5/12	42d	01-Apr-08	29-May-08
	Batch 5/12 Formal Approval Period	38d	01-Apr-08	28-May-08
	Issue Batch 5/12 For Approval to CEC	0d	01-Apr-08	
	Receive CEC Prior Approval For Batch 5/12	0d	29-May-08	
	Batch 5/14	42d	28-Jan-08	26-Mar-08
	Batch 5/14 Formal Approval Period	38d	28-Jan-08	25-Mar-08
	Issue Batch 5/14 For Approval to CEC	0d	28-Jan-08	
	Receive CEC Prior Approval For Batch 5/14	0d	26-Mar-08	
	Batch 5/15	40d	17-Mar-08	12-May-08
	Batch 5/15 Formal Approval Period	35d	17-Mar-08	09-May-08
	Issue Batch 5/15 For Approval to CEC	0d	17-Mar-08	
	Receive CEC Prior Approval For Batch 5/15	0d	12-May-08	
	Batch 5/16	42d	22-Feb-08	22-Apr-08
	Batch 5/16 Formal Approval Period	38d	22-Feb-08	21-Apr-08
	Issue Batch 5/16 For Approval to CEC	0d	22-Feb-08	
	Receive CEC Prior Approval For Batch 5/16	0d	22-Apr-08	
	Batch 5/17	42d	12-Feb-08	10-Apr-08
	Batch 5/17 Formal Approval Period	38d	12-Feb-08	09-Apr-08
	Issue Batch 5/17 For Approval to CEC	0d	12-Feb-08	
	Receive CEC Prior Approval For Batch 5/17	0d	10-Apr-08	
	Batch 5/18	42d	22-Feb-08	22-Apr-08
	Batch 5/18 Formal Approval Period	38d	22-Feb-08	21-Apr-08
	Issue Batch 5/18 For Approval to CEC	0d	22-Feb-08	
	Receive CEC Prior Approval For Batch 5/18	0d	22-Apr-08	
	Roads, Track, OLE, Landscaping, Street Lighting	40d	14-Jan-08	07-Mar-08
	Informal Consultation With CEC & tie Over Prior Approval for Roads, Track, OLE, Landscaping and Street Lighting	38d	14-Jan-08	07-Mar-08
	Tram Stop Balgreen	40d	14-Jan-08	07-Mar-08
	Informal Consultation With CEC & tie over Prior Approval Tram Stop Balgreen	38d	14-Jan-08	07-Mar-08
	Tram Stop Saughton	40d	14-Jan-08	07-Mar-08
	Informal Consultation With CEC & tie over Prior Approval Tram Stop Saugton	38d	14-Jan-08	07-Mar-08
	Tram Stop Bankhead	40d	14-Jan-08	07-Mar-08
	Informal Consultation With CEC & tie over Prior Approval Tram Stop Bankhead	38d	14-Jan-08	07-Mar-08
	Tram Stop Edinburgh Park Station	72d	17-May-07 A	24-Aug-07 A
	Informal Consultation With CEC & tie over Prior Approval Tram Stopn Edinburgh Park Station	67d	17-May-07 A	24-Aug-07 A
	Tram Stop Edinburgh Park Central	41d	17-May-07 A	12-Jul-07 A
	Informal Consultation With CEC & tie over Prior Approval Tram Stop Edinburgh Park Central	38d	17-May-07 A	12-Jul-07 A
	Tram Jenners Depository Substation	120d	29-Oct-07 A	23-Apr-08
	Informal Consultation With CEC & tie over Prior Approval Tram Jenners Depository Substation	55d	29-Oct-07 A	25-Jan-08
	Prior Approval Tram Jenners Depository Substation	0d		23-Apr-08
	Tram Bankhead Drive Substation	277d	10-Apr-07 A	12-May-08
	Informal Consultation With CEC & tie over Prior Approval Tram Bankhead Drive Substation	178d	10-Apr-07 A	14-Jan-08
	Prior Approval Tram Bankhead Drive Substation	0d		12-May-08
	Carrick Knowe Superstructure	40d	01-Feb-08	27-Mar-08
	Commence Carrick Knowe Superstructure Informal Consultation With CEC & tie Over Prior Approval	38d	01-Feb-08	27-Mar-08
	Saughton Road Assessment	182d	08-May-07 A	25-Jan-08
	Issue Saughton Road Assessment Report to CEC	0d	02-Jul-07 A	
	Receive Saughton Road Assessment Report comments from CEC	0d	14-Jan-08	
	CEC Saughton Road Assessment Report Review Period	125d	02-Jul-07 A	14-Jan-08
	Commence Saughton Road Informal Consultation With CEC & tie Over Prior Approval	17d	08-May-07 A	01-Jun-07 A
	Incorporate CEC comments into Saughton Road Assessment Report	9d	14-Jan-08	25-Jan-08
	South Gyle Access Road Bridge Superstructure	58d	29-Oct-07 A	25-Jan-08
	Commence South Gyle Access Road Bridge Informal Consultation With CEC & tie Over Prior Approval	55d	29-Oct-07 A	25-Jan-08
	Bankhead Drive Retaining Wall	40d	14-Nov-07 A	18-Jan-08
	Commence Bankhead Drive RW Informal Consultation With CEC & tie Over Prior Approval	39d	14-Nov-07 A	18-Jan-08
	Broomhouse Road Assessment	39d	09-Apr-07 A	01-Jun-07 A
	Receive Broomhouse Road Assessment Report comments from CEC	0d	18-May-07 A	
	Incorporate CEC comments into Broomhouse Road Assessment Report	9d	18-May-07 A	01-Jun-07 A

USB00000084_0023

Activity ID	Activity Name	Original Duration	Start	Finish
	Issue Broomhouse Road Assessment Report to CEC	0d	27-Apr-07 A	
	CEC Broomhouse Road Assessment Report Review Period	13d	27-Apr-07 A	17-May-07 A
	Commence Broomhouse Road Informal Consultation With CEC & tie Over Prior Approval	13d	09-Apr-07 A	27-Apr-07 A
	Technical Approvals	359d	22-Feb-07 A	17-Jul-08
	Carrick Knowe Review Period (TAA)	90d	01-Feb-08	05-Jun-08
	Issue Carrick Knowe Superstructure Design Package to TAA	0d	28-Mar-08	
	TAA Carrick Knowe Superstructure Design Package Review Period	38d	28-Mar-08	22-May-08
	Receive Carrick Knowe Superstructure Design Package comments from TAA	0d	23-May-08	
	Incorporate TAA comments into Carrick Knowe Superstructure Design Package	9d	23-May-08	05-Jun-08
	Commence Carrick Knowe Superstructure Informal Consultation With CEC Over Technical Approval	38d	01-Feb-08	27-Mar-08
	Carrick Knowe Review Period (Network Rail)	30d	06-Jun-08	17-Jul-08
	Issue Design and Check Certificate to Network Rail For Comment	0d	06-Jun-08	
	Network Rail Comment Period	19d	06-Jun-08	03-Jul-08
	Receive Superstructure Design Package comments from Network Rail	0d	04-Jul-08	
	Incorporate Network Rail comments into Superstructure Design Package	9d	04-Jul-08	17-Jul-08
	Saughton Road Assessment Review Period (TAA)	43d	09-Mar-07 A	08-May-07 A
	Commence Saughton Road Informal Consultation With CEC Over Technical Approval	38d	09-Mar-07 A	08-May-07 A
	South Gyle Access Road Bridge Review (TAA)	313d	22-Feb-07 A	14-May-08
	Issue South Gyle Access Road Bridge Detailed Design Package to TAA	0d		29-Feb-08
	TAA Approval Period	38d	03-Mar-08	29-Apr-08
	Receive TAA Comments	0d		29-Apr-08
	Incorporate TAA Comments	9d	30-Apr-08	14-May-08
	Commence South Gyle Access Road Bridge Informal Consultation With CEC Over Technical Approval	38d	22-Feb-07 A	20-Apr-07 A
	Bankhead Drive Retaining Wall Structure Review (TAA)	190d	02-Aug-07 A	02-May-08
	Issue Bankhead Drive RW Detailed Design Package to TAA	0d		20-Feb-08
	TAA Approval Period	38d	21-Feb-08	18-Apr-08
	Receive TAA Comments	0d		18-Apr-08
	Incorporate TAA Comments	9d	21-Apr-08	02-May-08
	Commence Bankhead Drive RW Informal Consultation With CEC Over Technical Approval	103d	02-Aug-07 A	14-Jan-08
	Broomhouse Road Assessment Review Period (TAA)	39d	09-Apr-07 A	01-Jun-07 A
	Issue Broomhouse Road Assessment Report to TAA	0d	27-Apr-07 A	
	TAA Broomhouse Road Assessment Report Review Period	13d	27-Apr-07 A	17-May-07 A
	Receive Broomhouse Road Assessment Report comments from TAA	0d	18-May-07 A	
	Incorporate TAA comments into Broomhouse Road Assessment Report	9d	18-May-07 A	01-Jun-07 A
	Commence Broomhouse Road Informal Consultation With CEC Over Technical Approval	13d	09-Apr-07 A	27-Apr-07 A
	Edinburgh Park Station Viaduct Review Period (TAA)	87d	03-Oct-07 A	11-Feb-08
	Issue Edinburgh Park Station Superstructure Design Package to TAA	0d	23-Nov-07 A	
	TAA Edinburgh Park Station Superstructure Design Package Review Period	38d	26-Nov-07 A	28-Jan-08
	Receive Edinburgh Park Station Superstructure Design Package comments from TAA	0d	29-Jan-08	
	Incorporate TAA comments into Edinburgh Park Station Superstructure Design Package	9d	29-Jan-08	11-Feb-08
	Commence Edinburgh Park Station Superstructure Informal Consultation With CEC Over Technical Approval	36d	03-Oct-07 A	23-Nov-07 A
	Edinburgh Park Station Viaduct Review Period (Network Rail)	30d	12-Feb-08	24-Mar-08
	Issue Design and Check Certificate to Network Rail For Comment	0d	12-Feb-08	
	Network Rail Comment Period	19d	12-Feb-08	10-Mar-08
	Receive Superstructure Design Package comments from Network Rail	0d	11-Mar-08	
	Incorporate Network Rail comments into Superstructure Design Package	9d	11-Mar-08	24-Mar-08
	Roads Technical Approval	311d	03-Apr-07 A	19-Jun-08
	Issue Roads Design to Roads Authority for Approval	0d		25-Mar-08
	Roads Authority Approval Period	38d	26-Mar-08	21-May-08
	Receive Roads Authority Comments	0d		21-May-08
	Update to Roads Authority Comments	19d	22-May-08	19-Jun-08
	Roads Authority Informal Consultation	38d	03-Apr-07 A	01-Jun-07 A
	Roads Technical Approval Granted	0d		19-Jun-08
	Drainage Technical Approval	110d	19-Dec-07 A	29-May-08
	Roads Authority Informal Consultation For Drainage	58d	19-Dec-07 A	25-Mar-08
	Issue Drainage Design to Roads Authority for Approval	0d		25-Mar-08
	Roads Authority Approval Period For Drainage	38d	26-Mar-08	21-May-08
	Receive Roads Authority Comments For Drainage	0d		21-May-08
	Update to Roads Authority Comments For Drainage	5d	22-May-08	29-May-08
	Drainage Technical Approval Granted	0d		29-May-08
	Track (Task700.3.1)	22d	23-Mar-07 A	24-Apr-07 A
	Issue Track Alignment Design to tie Section 5B	0d		23-Mar-07 A
	tie Approval Period	19d	26-Mar-07 A	24-Apr-07 A
	Receive tie Comments	0d	20-Apr-07 A	
	Roads, Street Lighting & Landscaping (Task700.3.2)	16d	01-Jun-07 A	25-Jun-07 A
	Issue Notification Of Completion Letter- Roads Design to tie for Approval Section 5B	0d		01-Jun-07 A
	Issue Notification Of Completion Letter- Hard & Soft Landscaping Design to tie Section 5B	0d		25-Jun-07 A
	Issue Notification Of Completion Letter- Street Lighting Design (Inc. Any OLE Combined Pole Design) to tie Section 5B	0d		19-Jun-07 A
	Drainage	99d	27-Sep-07 A	22-Feb-08
	Issue Drainage Design Completion Letter to tie for Approval Section 5B	0d		27-Sep-07 A
	Issue Drainage Design Completion Letter to tie for Approval Section 5B	0d		22-Feb-08
	Boundary & Accomodation Works (Task700.3.3)	0d	30-Jul-07 A	30-Jul-07 A
	Issue Notification Of Completion Letter- Detailed Design of Boundary & Accomodation Works Section 5B	0d		30-Jul-07 A
	Utilities (Task700.3.4)	106d	29-Mar-07 A	27-Aug-07 A
	Issue DD to SUC For Approval	0d		29-Mar-07 A
	SUC Approval Period	96d	30-Mar-07 A	27-Aug-07 A

Activity ID	Activity Name	Original Duration	Start	Finish
	BAR - SRN	393d	20-Sep-06 A	27-Mar-08
	Tram Stop Balgreen (Task700.3.5)	319d	20-Sep-06 A	19-Dec-07 A
	Issue Notification Of Completion Letter- Balgreen Tram Stop Design to tie	0d		19-Dec-07 A
	Site Visit with tie & CEC To Review Preliminary Design	1d	02-Jul-07 A	02-Jul-07 A
	Addressing PD Comments	3d	20-Sep-06 A	22-Sep-06 A
	Tram Jenners Depository Substation (Task700.3.9)	0d	20-Dec-07 A	20-Dec-07 A
	Issue Notification Of Completion Letter- Tram Jenner's Depository Substation Planning Submission to tie for Approva	0d		20-Dec-07 A
	Tram Stop Saughton (Task700.3.6)	229d	22-Sep-06 A	17-Aug-07 A
	Issue Notification Of Completion Letter- Saughton Tram Stop Design to tie	0d		17-Aug-07 A
	Site Visit with tie & CEC To Review Preliminary Design	1d	02-Jul-07 A	02-Jul-07 A
	Addressing PD Comments	1d	22-Sep-06 A	22-Sep-06 A
	Structures	272d	05-Mar-07 A	27-Mar-08
	S23 Carrick Knowe Underbridge (NR Ref 090/009-1)	66d	18-Dec-07 A	27-Mar-08
	Superstructure Detailed Design	66d	18-Dec-07 A	27-Mar-08
	VO193 Superstructure Detailed Design Restart	66d	18-Dec-07 A	27-Mar-08
	Issue Superstructure Detailed Design Package to CAT III Checker	0d	18-Dec-07 A	
	Superstructure CAT III Check	42d	18-Dec-07 A	26-Feb-08
	Receive & Incorporate CAT III comments	9d	27-Feb-08	11-Mar-08
	Issue Notification Of Completion Letter- Carrick Knowe Superstructure Design Package to tie	0d		27-Mar-08
	Substructure Detailed Design	63d	21-Dec-07 A	27-Mar-08
	VO193 Substructure Detailed Design Restart	63d	21-Dec-07 A	27-Mar-08
	Issue Substructure Detailed Design Package to CAT III Checker	0d	21-Dec-07 A	
	Substructure CAT III Check	38d	21-Dec-07 A	25-Feb-08
	Receive & Incorporate CAT III comments	9d	26-Feb-08	10-Mar-08
	Issue Notification Of Completion Letter- Carrick Knowe Substructure Design Package to tie	0d		27-Mar-08
	S24 Existing Saughton Road Bridge	65d	05-Mar-07 A	04-Jun-07 A
	Structure Assessment	65d	05-Mar-07 A	04-Jun-07 A
	Issue Structure Assessment Package to CAT I Checker	0d	05-Mar-07 A	
	Structure Assessment Package CAT I Check	19d	05-Mar-07 A	30-Mar-07 A
	Receive & Incorporate CAT I comments	9d	10-Apr-07 A	23-Apr-07 A
	Issue Notification Of Completion Letter- Existing Saughton Road Bridge Assessment Report to tie	0d	04-Jun-07 A	
	SRN - SGA	356d	21-Sep-06 A	20-Feb-08
	Tram Stop Bankhead (Task700.3.10)	230d	21-Sep-06 A	17-Aug-07 A
	Issue Notification Of Completion Letter- Bankhead Tram Stop Design to tie	0d		17-Aug-07 A
	Site Visit with tie & CEC To Review Preliminary Design	1d	02-Jul-07 A	02-Jul-07 A
	Addressing Comments from Preliminary Design	7d	21-Sep-06 A	29-Sep-06 A
	Structures	293d	18-Dec-06 A	20-Feb-08
	S05 Existing Broomhouse Road Bridge	68d	27-Feb-07 A	01-Jun-07 A
	Structure Assessment	68d	27-Feb-07 A	01-Jun-07 A
	Issue Structure Assessment Package to CAT I Checker	0d	27-Feb-07 A	
	Structure Assessment Package CAT I Check	14d	27-Feb-07 A	19-Mar-07 A
	Receive & Incorporate CAT I comments	9d	20-Mar-07 A	02-Apr-07 A
	Broomhouse Road Bridge Design Complete	0d	01-Jun-07 A	
	S26 South Gyle Access Road Bridge (Task700.3.12)	273d	22-Dec-06 A	29-Jan-08
	South Gyle Access Road Bridge Superstructure Detailed Design	273d	22-Dec-06 A	29-Jan-08
	Issue Notification Of Completion Letter- South Gyle Access Bridge Superstructure Package to tie for Comments	0d		20-Dec-07 A
	Issue Detailed Design Package to CAT II Checker	0d		22-Dec-06 A
	Bridge CATII Review Period	244d	02-Jan-07 A	15-Jan-08
	Receive and Incorporate CATII Check Comments	9d	16-Jan-08	29-Jan-08
	South Gyle Access Road Bridge Substructure Detailed Design	261d	08-Jan-07 A	17-Jan-08
	Issue Notification Of Completion Letter- South Gyle Access Bridge Substructure Package to tie for Comments	0d		17-Jan-08
	Issue Detailed Design Package to CAT II or CAT III Checker (as appropriate)	0d		08-Jan-07 A
	W11 Bankhead Drive Retaining Wall (Task700.3.11)	293d	18-Dec-06 A	20-Feb-08
	Bankhead Drive Retaining Wall Structure Detailed Design	293d	18-Dec-06 A	20-Feb-08
	Issue Notification Of Completion Letter- Bankhead Drive Retaining Wall Package to tie for Comments	0d		18-Jan-08
	Issue Detailed Design Package to CAT II Checker	0d		18-Dec-06 A
	Bridge CATII Review Period	13d	18-Jan-08	06-Feb-08
	Receive and Incorporate CATII Check Comments	9d	07-Feb-08	20-Feb-08
	Tram Bankhead Drive Substation (Task700.3.13)	0d	19-Apr-07 A	19-Apr-07 A
	Issue Notification Of Completion Letter- Tram Bankhead Drive Substation Planning Submission to tie for Approval	0d		19-Apr-07 A
	SGA - EPS	173d	26-Mar-07 A	23-Nov-07 A
	Tram Stop Edinburgh Park Station (Task700.3.14)	134d	26-Mar-07 A	28-Sep-07 A
	Issue Notification Of Completion Letter- Edinburgh Park Station Tram Stop Design to tie	0d		28-Sep-07 A
	Issue Edinburgh Park Station Tram Stop Package for Prior Approval to tie	0d		26-Mar-07 A
	Structures	47d	19-Sep-07 A	23-Nov-07 A
	S27 Edinburgh Park Station Viaduct (NR Ref 070/003-2)	47d	19-Sep-07 A	23-Nov-07 A
	Superstructure Detailed Design	47d	19-Sep-07 A	23-Nov-07 A
	Issue Superstructure Detailed Design Package to CAT III Checker	0d	19-Sep-07 A	
	Superstructure CAT III Check	28d	19-Sep-07 A	30-Oct-07 A
	Receive & Incorporate CAT III comments	9d	31-Oct-07 A	13-Nov-07 A
	Issue Notification Of Completion Letter- Edinburgh Park Station Viaduct Superstructure Design Package to tie	0d	23-Nov-07 A	
	Substructure Detailed Design	47d	19-Sep-07 A	23-Nov-07 A
	Issue Substructure Detailed Design Package to CAT III Checker	0d	19-Sep-07 A	
	Substructure CAT III Check	19d	19-Sep-07 A	16-Oct-07 A
	Receive & Incorporate CAT III comments	9d	17-Oct-07 A	30-Oct-07 A
	Issue Notification Of Completion Letter- Edinburgh Park Station Viaduct Substructure Design Package to tie	0d	23-Nov-07 A	

Activity ID	Activity Name	Original Duration	Start	Finish
	EPS - EDP	229d	22-Sep-06 A	17-Aug-07 A
	Tram Stop Edinburgh Park Central (Task700.3.17)	229d	22-Sep-06 A	17-Aug-07 A
	Issue Notification Of Completion Letter- Edinburgh Park Central Tram Stop Design to tie	0d		17-Aug-07 A
	Site Visit with tie & CEC To Review Preliminary Design	1d	02-Jul-07 A	02-Jul-07 A
	Addressing PD Comments	1d	22-Sep-06 A	22-Sep-06 A
	EDP - GOG - Section 5C (Task700.4)	383d	10-Jan-07 A	09-Jul-08
	Sub Section Wide	383d	10-Jan-07 A	09-Jul-08
	Sub Section Wide IDC	22d	28-Feb-08	28-Mar-08
	Subsection Wide IDC	21d	28-Feb-08	28-Mar-08
	Consents & Approvals	368d	01-Feb-07 A	09-Jul-08
	Prior Approvals	329d	01-Feb-07 A	16-May-08
	Combined Section Prior Approval	60d	22-Feb-08	16-May-08
	Issue Combined Package 5C for Prior Approval to CEC	0d		22-Feb-08
	Receive Combined Package 5C Comments From CEC	0d		18-Apr-08
	Prior Approval Granted for Section 5C Combined Package	0d		16-May-08
	CEC Approval Period - 5C Combined Package	38d	22-Feb-08	18-Apr-08
	Update 5C Combined Package to CEC Comments	19d	18-Apr-08	16-May-08
	Batch 5/19	112d	20-Feb-08 A	17-Apr-08
	Batch 5/19 Formal Approval Period	38d	20-Feb-08 A	16-Apr-08
	Issue Batch 5/19 For Approval to CEC	0d	20-Feb-08 A	
	Receive CEC Prior Approval For Batch 5/19	0d	17-Apr-08	
	Batch 5/20	40d	10-Jan-08 A	06-Mar-08
	Batch 5/20 Formal Approval Period	38d	10-Jan-08 A	05-Mar-08
	Issue Batch 5/20 For Approval to CEC	0d	10-Jan-08 A	
	Receive CEC Prior Approval For Batch 5/20	0d	06-Mar-08	
	Batch 5/22	42d	25-Jan-08	25-Mar-08
	Batch 5/22 Formal Approval Period	38d	25-Jan-08	20-Mar-08
	Issue Batch 5/22 For Approval to CEC	0d	25-Jan-08	
	Receive CEC Prior Approval For Batch 5/22	0d	25-Mar-08	
	Roads, Track, OLE, Landscaping, Street Lighting	40d	01-Feb-07 A	28-Mar-07 A
	Informal Consultation With CEC & tie Over Prior Approval for Roads, Track, OLE, Landscaping and Street Lighting	38d	01-Feb-07 A	28-Mar-07 A
	Tram Stop Gyle Centre	40d	01-Feb-07 A	28-Mar-07 A
	Informal Consultation With CEC & tie over Prior Approval Tram Stop Gyle Centre	38d	01-Feb-07 A	28-Mar-07 A
	Depot Halt	40d	06-Feb-07 A	02-Apr-07 A
	Informal Consultation With CEC & tie over Prior Approval Tram Stop Depot Stop	38d	06-Feb-07 A	02-Apr-07 A
	Gyle Stop Retaining Walls	40d	01-Feb-07 A	28-Mar-07 A
	Commence Gyle Stop RW Informal Consultation With CEC & tie Over Prior Approval	38d	01-Feb-07 A	28-Mar-07 A
	Technical Approvals	368d	01-Feb-07 A	09-Jul-08
	Gyle Stop Retaining Walls Structure Review (TAA)	298d	22-Feb-07 A	23-Apr-08
	Issue Detailed Design Package to TAA	0d		11-Feb-08*
	Incorporate TAA Comments	9d	10-Apr-08	23-Apr-08
	TAA Review Period	38d	12-Feb-08	09-Apr-08
	Receive TAA Comments	0d		09-Apr-08
	Commence Gyle Stop RW Informal Consultation With CEC Over Technical Approval	38d	22-Feb-07 A	20-Apr-07 A
	Roads Technical Approval	346d	01-Feb-07 A	09-Jun-08
	Issue Roads Design to Roads Authority for Approval	0d		28-Mar-08
	Roads Authority Approval Period	38d	31-Mar-08	27-May-08
	Receive Roads Authority Comments	0d		27-May-08
	Update to Roads Authority Comments	8d	28-May-08	09-Jun-08
	Roads Authority Informal Consultation	38d	01-Feb-07 A	28-Mar-07 A
	Roads Technical Approval Granted	0d		09-Jun-08
	Drainage Technical Approval	342d	01-Feb-07 A	03-Jun-08
	Roads Authority Informal Consultation For Drainage	38d	01-Feb-07 A	28-Mar-07 A
	Issue Drainage Design to Roads Authority for Approval	0d		28-Mar-08
	Roads Authority Approval Period For Drainage	38d	31-Mar-08	27-May-08
	Receive Roads Authority Comments For Drainage	0d		27-May-08
	Update to Roads Authority Comments For Drainage	5d	28-May-08	03-Jun-08
	Drainage Technical Approval Granted	0d		03-Jun-08
	A8 Underpass Superstructure Review (TAA)	94d	29-Feb-08	09-Jul-08
	Issue Detailed Design Package to TAA	0d		28-Apr-08
	TAA Approval Period	38d	29-Apr-08	25-Jun-08
	Receive TAA Comments	0d		25-Jun-08
	Incorporate TAA Comments	9d	26-Jun-08	09-Jul-08
	Commence A8 Underpass Informal Consultation With CEC Over Technical Approval	38d	29-Feb-08	28-Apr-08
	Track (Task700.4.1)	58d	10-Jan-07 A	03-Apr-07 A
	Issue Track Alignment Design to tie Section 5C	0d		10-Jan-07 A
	tie Approval Period	19d	11-Jan-07 A	07-Feb-07 A
	Receive tie Comments	0d	03-Apr-07 A	
	Roads, Street Lighting & Landscaping (Task700.4.2)	138d	19-Feb-07 A	30-Aug-07 A
	Issue Roads Design to tie for Approval Section 5C	0d		23-Feb-07 A
	tie Approval Period	19d	26-Feb-07 A	23-Mar-07 A
	No tie Comments Received - Change in Protocol Going Forward	0d		04-May-07 A
	Issue Notification Of Completion Letter- Hard & Soft Landscaping Design to tie Section 5C	0d		30-Aug-07 A
	Issue Street Lighting Design (Inc. Any OLE Combined Pole Design) to tie Section 5C	0d		19-Feb-07 A
	Drainage	102d	27-Sep-07 A	27-Feb-08
	Issue Drainage Design Completion Letter to tie for Approval Section 5C	0d		27-Sep-07 A

USB00000084_0026

Activity ID	Activity Name	Original Duration	Start	Finish
	Issue Drainage Design Completion Letter to tie for Approval Section 5C	0d		27-Feb-08
	Boundary & Accomodation Works (Task700.4.3)	0d	16-Jul-07 A	16-Jul-07 A
	Issue Notification Of Completion Letter- Detailed Design of Boundary & Accomodation Works Section 5C	0d		16-Jul-07 A
	Utilities (Task700.4.4)	84d	01-May-07 A	27-Aug-07 A
	Issue DD to SUC For Approval	0d		01-May-07 A
	SUC Approval Period	77d	01-May-07 A	27-Aug-07 A
	EDP - GYL	159d	10-Jan-07 A	21-Aug-07 A
	Tram Stop Gyle Centre (Task700.4.7)	142d	01-Feb-07 A	17-Aug-07 A
	Issue Notification Of Completion Letter- Gyle Centre Tram Stop Design to tie	0d		17-Aug-07 A
	Issue Gyle Tram Stop Package for Prior Approval to tie	0d		01-Feb-07 A
	tie Approval Period	19d	01-Feb-07 A	28-Feb-07 A
	Receive tie Comments	0d		16-Mar-07 A
	Structures	159d	10-Jan-07 A	21-Aug-07 A
	W19? Gyle Stop Retaining Walls (Task700.4.6)	159d	10-Jan-07 A	21-Aug-07 A
	Gyle Stop Retaining Walls Preliminary Design Milestones	0d	25-Jan-07 A	25-Jan-07 A
	tie and TAA Sign Off PD	0d		25-Jan-07 A
	Gyle Stop Retaining Walls Structure Detailed Design	159d	10-Jan-07 A	21-Aug-07 A
	Issue Notification Of Completion Letter- Gyle Stop Retaining Walls Package to tie for Comments	0d		21-Aug-07 A
	Issue Detailed Design Package to CAT II Checker	0d		10-Jan-07 A
	Receive and Incorporate CATII Check Comments	5d	09-Aug-07 A	16-Aug-07 A
	CAT II Review Period	9d	30-Jul-07 A	10-Aug-07 A
	GYL - DEH (including A8 Underpass)	150d	20-Sep-07 A	28-Apr-08
	Depot Halt(Task700.4.8)	0d	20-Sep-07 A	20-Sep-07 A
	Issue Notification Of Completion Letter- Depot Halt Design to tie	0d		20-Sep-07 A
	Structures	50d	19-Feb-08	28-Apr-08
	VO28 S28 A8 Underpass (Task700.4.9) CNS010	50d	19-Feb-08	28-Apr-08
	A8 Underpass Superstructure Detailed Design	50d	19-Feb-08	28-Apr-08
	Issue Notification Of Completion Letter- A8 Underpass Superstructure Detailed Design Package to tie for Comments	0d		28-Apr-08
	Issue Detailed Design Package to CAT II Checker	0d	19-Feb-08*	
	Bridge CATII Review Period	27d	19-Feb-08	01-Apr-08
	Receive and Incorporate CATII Check Comments	9d	02-Apr-08	15-Apr-08
	DEH - GOG	0d	17-Aug-07 A	17-Aug-07 A
	Tram Stop Gogarburn (Task700.4.13)	0d	17-Aug-07 A	17-Aug-07 A
	Issue Notification Of Completion Letter- Gogarburn Tram Stop Design to tie	0d		17-Aug-07 A
	GDE DEPOT - Section 6 (Task870)	536d	21-Dec-06 A	09-Feb-09
	GDE DEPOT - Section Wide	536d	21-Dec-06 A	09-Feb-09
	DEPOT	536d	21-Dec-06 A	09-Feb-09
	Sub Section Wide IDC	20d	09-Oct-08	06-Nov-08
	Subsection Wide IDC - Roads, Track, Stops, B&A, Street Lighting (Excl. Dept Access Bridge)	19d	09-Oct-08	06-Nov-08
	Section Approvals	505d	13-Feb-07 A	09-Feb-09
	Planning Conditions	377d	13-Feb-07 A	04-Aug-08
	Combined Section Prior Approval	40d	09-Jun-08	04-Aug-08
	Issue Combined Package 6 for Prior Approval to CEC	0d		09-Jun-08
	Prior Approval Granted for Section 6 Combined Package	0d		04-Aug-08
	CEC Approval Period - 6 Combined Package	38d	09-Jun-08	04-Aug-08
	Batch 6/21	40d	06-Jun-08	01-Aug-08
	Batch 6/21 Formal Approval Period	38d	06-Jun-08	31-Jul-08
	Issue Batch 6/21 For Approval to CEC	0d	06-Jun-08	
	Receive CEC Prior Approval For Batch 6/21	0d	01-Aug-08	
	Batch 6/22	40d	09-Jun-08	04-Aug-08
	Batch 6/22 Formal Approval Period	38d	09-Jun-08	01-Aug-08
	Issue Batch 6/22 For Approval to CEC	0d	09-Jun-08	
	Receive CEC Prior Approval For Batch 6/22	0d	04-Aug-08	
	Tram Gogar Depot Substation	258d	27-Jul-07 A	01-Aug-08
	Prior Approval For Tram Gogar Depot Substation	0d		01-Aug-08
	Informal Consultation With CEC & tie Over Prior Approval Tram Gogar Depot Substation	38d	27-Jul-07 A	21-Sep-07 A
	Roads, Track, OLE, Landscaping, Street Lighting	42d	13-Feb-07 A	11-Apr-07 A
	Informal Consultation With CEC & tie Over Prior Approval for Roads, Track, OLE, Landscaping and Street Lighting	38d	13-Feb-07 A	11-Apr-07 A
	Depot Buildings	41d	16-Jul-07 A	10-Sep-07 A
	Informal Consultation With CEC & tie Over Prior Approval Depot Buildings	38d	16-Jul-07 A	10-Sep-07 A
	Depot Drainage	88d	14-Jan-08	14-May-08
	Issue Drainage Design To CEC For Prior Approval	0d		07-Mar-08
	Depot Drainage Design CEC Approval Period	38d	10-Mar-08	07-May-08
	Receive Depot Drainage Design CEC Comments	0d		07-May-08
	Incorporate CEC Comments into Depot Drainage Design	5d	08-May-08	14-May-08
	Informal Consultation With CEC & tie Over Prior Approval For Drainage	38d	14-Jan-08	07-Mar-08
	Drainage Prior Approval	0d		14-May-08
	Structure Prior Approvals	40d	14-Jan-08	07-Mar-08
	Depot Access Road Bridge Superstructure	40d	14-Jan-08	07-Mar-08
	Commence Depot Access Road Bridge Informal Consultation With CEC & tie Over Prior Approval	38d	14-Jan-08	07-Mar-08
	British Airport Authority (BAA) Approval	80d	11-Sep-08	12-Jan-09
	Issue to BAA for Approval	0d		06-Nov-08
	BAA Approval Period	38d	06-Nov-08	12-Jan-09
	BAA Informal Consultation	38d	11-Sep-08	06-Nov-08
	BAA Approval	0d		12-Jan-09
	Building Regulations Approval	47d	08-Feb-08	15-Apr-08

Activity ID	Activity Name	Original Duration	Start	Finish
	Submit Package for Building Regulations Approval	0d		08-Feb-08
	Building Regulations Approval Period	38d	11-Feb-08	08-Apr-08
	Incorporate Comments for Building Regulations Approval	0d		08-Apr-08
	Update to Building Regulations Approval Comments	5d	09-Apr-08	15-Apr-08
	Receive Stage 1 Building Reg Approval	0d		15-Apr-08
	Technical Approvals	351d	17-Sep-07 A	09-Feb-09
	Roads Technical Approval	100d	11-Sep-08	09-Feb-09
	Roads Authority Informal Consultation	38d	11-Sep-08	06-Nov-08
	Issue Roads Design to Roads Authority for Approval	0d		06-Nov-08
	Roads Authority Approval Period	38d	06-Nov-08	12-Jan-09
	Receive Roads Authority Comments	0d		12-Jan-09
	Update to Roads Authority Comments	19d	12-Jan-09	09-Feb-09
	Discharge of Roads Technical Approval	0d		09-Feb-09
	Drainage Technical Approval	85d	11-Sep-08	19-Jan-09
	Roads Authority Informal Consultation For Drainage	38d	11-Sep-08	06-Nov-08
	Issue Drainage Design to Roads Authoriy for Approval	0d		06-Nov-08
	Roads Authority Approval Period For Drainage	38d	06-Nov-08	12-Jan-09
	Receive Roads Authority Comments For Drainage	0d		12-Jan-09
	Update to Roads Authority Comments For Drainage	5d	12-Jan-09	19-Jan-09
	Drainage Technical Approval Granted	0d		19-Jan-09
	Depot Access Road Bridge Review (TAA)	223d	17-Sep-07 A	01-Aug-08
	Issue Detailed Design Package to TAA	0d		22-May-08
	TAA Approval Period	38d	23-May-08	18-Jul-08
	Receive TAA Comments	0d		18-Jul-08
	Incorporate TAA Comments	9d	21-Jul-08	01-Aug-08
	Commence Depot Access Road Bridge Informal Consultation With CEC Over Technical Approval	74d	17-Sep-07 A	14-Jan-08
	Track (Task870.2)	0d	01-Aug-07 A	01-Aug-07 A
	Issue Notification Of Completion Letter- Track Alignment Design to tie Section 6	0d		01-Aug-07 A
	Roads, Street Lighting & Landscaping (Task870.3)	97d	11-Apr-07 A	24-Aug-07 A
	Issue Notification Of Completion Letter- Roads Design to tie for Approval Section 6	0d		11-Apr-07 A
	Issue Notification Of Completion Letter- Street Lighting Design (Inc. Any OLE Combined Pole Design) to tie Section 6	0d		24-Aug-07 A
	Drainage	17d	27-Sep-07 A	22-Oct-07 A
	Issue Drainage Design Completion Letter to tie for Approval Section 6	0d		27-Sep-07 A
	Re-Issue Drainage Design Completion Letter to tie for Approval Section 6 NOT REQUIRED - PART OF GENERAL DEPOT RE ISSUE	0d		22-Oct-07 A
	Boundary & Accomodation Works (Task870.4)	0d	20-Aug-07 A	20-Aug-07 A
	Issue Notification Of Completion Letter- Detailed Design of Boundary & Accomodation Works Section 6	0d		20-Aug-07 A
	Earthworks	0d	21-Sep-07 A	21-Sep-07 A
	Issue Notification Of Completion Letter- Detailed Depot Earthworks Design	0d	21-Sep-07 A	
	Depot Ductwork -External Services	0d	21-Sep-07 A	21-Sep-07 A
	Issue Notification Of Completion Letter- Depot Ductwork Design to tie	0d		21-Sep-07 A
	Utilities (Task870.1)	0d	08-Jan-07 A	08-Jan-07 A
	Issue DD to SUC For Approval	0d		08-Jan-07 A
	Depot Main Building (Task870.1)	0d	21-Sep-07 A	21-Sep-07 A
	General (Task870.1.1)	0d	21-Sep-07 A	21-Sep-07 A
	Issue Notification Of Completion Letter- Depot Building Architectural Layout Package to tie	0d		21-Sep-07 A
	Building Foundations (Task870.1.2)	0d	21-Sep-07 A	21-Sep-07 A
	Issue Notification Of Completion Letter- Depot Detailed Substructure Drawings & Specifications to tie	0d		21-Sep-07 A
	Ground Floor Slab & Pits (Task870.1.3)	0d	21-Sep-07 A	21-Sep-07 A
	Issue Notification Of Completion Letter- Depot Ground Flr Slab to tie	0d		21-Sep-07 A
	Steel Superstructure (Task870.1.4)	0d	21-Sep-07 A	21-Sep-07 A
	Issue Notification Of Completion Letter- Depot Detailed Superstructure Drawings and Specifications	0d		21-Sep-07 A
	Depot OLE (Task870.5)	0d	04-May-07 A	04-May-07 A
	Issue Notification Of Completion Letter- Final Detailed Layout Plans & Standard & Special Cross Sections to tie Sec6	0d		04-May-07 A
	VO238 OLE rework for depot (Internal - not PM approved)	0d	23-Jan-08	23-Jan-08
	Re-Issue Notification Of Completion Letter- Final Detailed Layout Plans & Standard & Special Cross Sections to tie	0d		23-Jan-08
	Depot Lighting Design (Task870.6)	0d	21-Sep-07 A	21-Sep-07 A
	Issue Notification Of Completion Letter- Yard Detailed Design Lighting Design	0d		21-Sep-07 A
	Tram Gogar Depot Substation (Task870.7)	0d	21-Sep-07 A	21-Sep-07 A
	Issue Notification Of Completion Letter- Tram Gogar Depot Substation Design to tie (Part of General Depot Submission)	0d		21-Sep-07 A
	Structures	5d	21-Dec-06 A	08-Jan-07 A
	VO7 - S32 - Depot Access Road Bridge (Task CR7)	5d	21-Dec-06 A	08-Jan-07 A
	Depot Access Road Bridge Substructure Detailed Design	0d	21-Dec-06 A	21-Dec-06 A
	Issue Detailed Design Package to CAT II Checker	0d	21-Dec-06 A	
	Depot Access Road Bridge Superstructure Detailed Design	0d	08-Jan-07 A	08-Jan-07 A
	Issue Detailed Design Package to CAT II Checker	0d	08-Jan-07 A	
	VO250 Gogar Depot Adjustment due to EARL CNS067	0d	22-May-08	22-May-08
	Issue Notification Of Completion Letter- Depot Access Road Bridge Structure Package to tie	0d		22-May-08
	VO265 Gogar Depot Redesign (Internal - not PM approved)	52d	28-Mar-08	10-Jun-08
	VO265 Additional Retaining Walls	52d	28-Mar-08	10-Jun-08
	Issue Depot Internal Retaining Walls AIP to tie	0d	28-Mar-08	
	Issue Depot Internal Retaining Walls AIP to CEC	0d	28-Mar-08	
	Issue Depot Internal Retaining Walls AIP to TAA	0d	28-Mar-08	
	Receive TAA comments	0d	27-May-08	
	Receive approved and signed AIP	0d	10-Jun-08	
	Gogarburn to Edinburgh Airport - Section 7 (Task800)	500d	22-Sep-06 A	10-Sep-08
	Section Wide - Section 7	0d	13-Apr-07 A	13-Apr-07 A

Activity ID	Activity Name	Original Duration	Start	Finish
	Section Wide	0d	13-Apr-07 A	13-Apr-07 A
	OLE (Task800.1)	0d	13-Apr-07 A	13-Apr-07 A
	Issue Notification Of Completion Letter- Final Detailed Layout Plans & Standard & Special Cross Section to tie Section 7	0d		13-Apr-07 A
	GOG - AIR - Section 7A (Task800.2)	500d	22-Sep-06 A	10-Sep-08
	Sub Section Wide	434d	22-Dec-06 A	10-Sep-08
	Sub Section Wide IDC	20d	16-Apr-08	13-May-08
	Subsection Wide IDC	19d	16-Apr-08	13-May-08
	Consents & Approvals	396d	26-Feb-07 A	10-Sep-08
	Prior Approvals	346d	26-Feb-07 A	02-Jul-08
	Combined Section Prior Approval	60d	01-Apr-08	24-Jun-08
	Issue Combined Package 7A for Prior Approval to CEC	0d		01-Apr-08
	Receive Combined Package 7A Comments From CEC	0d		27-May-08
	Prior Approval Granted for Section 7A Combined Package	0d		24-Jun-08
	CEC Approval Period - 7A Combined Package	38d	01-Apr-08	27-May-08
	Update 7A Combined Package to CEC Comments	19d	27-May-08	24-Jun-08
	Batch 7/23	42d	01-Apr-08	29-May-08
	Batch 7/23 Formal Approval Period	38d	01-Apr-08	28-May-08
	Issue Batch 7/23 For Approval to CEC	0d	01-Apr-08	
	Receive CEC Prior Approval For Batch 7/23	0d	29-May-08	
	Batch 7/24	40d	02-Nov-07 A	08-Jan-08 A
	Batch 7/24 Formal Approval Period	38d	02-Nov-07 A	04-Jan-08 A
	Issue Batch 7/24 For Approval to CEC	0d	02-Nov-07 A	
	Receive CEC Prior Approval For Batch 7/24	0d	08-Jan-08 A	
	Batch 7/25	43d	06-Mar-08	06-May-08
	Batch 7/25 Formal Approval Period	38d	06-Mar-08	02-May-08
	Issue Batch 7/25 For Approval to CEC	0d	06-Mar-08	
	Receive CEC Prior Approval For Batch 7/25	0d	06-May-08	
	Batch 7/26 NO LONGER REQUIRED	40d	30-Jul-07 A	21-Sep-07 A
	Batch 7/26 Formal Approval Period	37d	30-Jul-07 A	21-Sep-07 A
	Issue Batch 7/26 For Approval to CEC	0d	01-Aug-07 A	
	NO LONGER REQUIRED DUE TO DEMISE OF EARL	0d	21-Sep-07 A	
	Batch 7/27	43d	13-Mar-08	13-May-08
	Batch 7/27 Formal Approval Period	38d	13-Mar-08	12-May-08
	Issue Batch 7/27 For Approval to CEC	0d	13-Mar-08	
	Receive CEC Prior Approval For Batch 7/27	0d	13-May-08	
	Batch 7/28	43d	20-Mar-08	20-May-08
	Batch 7/28 Formal Approval Period	38d	20-Mar-08	19-May-08
	Issue Batch 7/28 For Approval to CEC	0d	20-Mar-08	
	Receive CEC Prior Approval For Batch 7/28	0d	20-May-08	
	Batch 7/29	41d	27-Mar-08	23-May-08
	Batch 7/29 Formal Approval Period	38d	27-Mar-08	22-May-08
	Issue Batch 7/29 For Approval to CEC	0d	27-Mar-08	
	Receive CEC Prior Approval For Batch 7/29	0d	23-May-08	
	Roads, Track, OLE, Landscaping, Street Lighting	42d	26-Feb-07 A	24-Apr-07 A
	Informal Consultation With CEC & tie Over Prior Approval for Roads, Track, OLE, Landscaping and Street Lighting	38d	26-Feb-07 A	24-Apr-07 A
	Tram Stop Ingliston Park and Ride	40d	14-Jan-08	07-Mar-08
	Informal Consultation With CEC & tie over Prior Approval Tram Stop Ingliston Park and Ride	38d	14-Jan-08	07-Mar-08
	Tram Eastfield Road Substation	76d	07-Feb-08	23-May-08
	Informal Consultation With CEC & tie over Prior Approval Tram Eastfield Road Substation	38d	07-Feb-08	02-Apr-08
	Prior Approval Tram Eastfield Road Substation	0d		23-May-08
	Gogar Culvert Two	40d	26-Mar-08	20-May-08
	Commence Gogar Burn Culvert Two Informal Consultation With CEC & tie Over Prior Approval	38d	26-Mar-08	20-May-08
	Gogar Culvert Three	40d	26-Mar-08	20-May-08
	Commence Gogar Burn Culvert Three Informal Consultation With CEC & tie Over Prior Approval	38d	26-Mar-08	20-May-08
	Gogar Burn Retaining Wall One	40d	08-May-08	02-Jul-08
	Commence Gogar Burn RW One Informal Consultation With CEC & tie Over Prior Approval	38d	08-May-08	02-Jul-08
	Gogar Burn Retaining Wall Two	40d	14-Jan-08	07-Mar-08
	Commence Gogar Burn RW Two Informal Consultation With CEC & tie Over Prior Approval	38d	14-Jan-08	07-Mar-08
	Tram Stop Edinburgh Airport	40d	30-Jan-08	25-Mar-08
	Informal Consultation With CEC & tie over Prior Approval Tram Stop Edinburgh Airport	38d	30-Jan-08	25-Mar-08
	Technical Approvals	396d	26-Feb-07 A	10-Sep-08
	Gogarburn Bridge Review (TAA)	140d	22-Oct-07 A	13-May-08
	Issue Detailed Design Package to TAA	0d		28-Feb-08
	TAA Approval Period	38d	29-Feb-08	28-Apr-08
	Receive TAA Comments	0d		28-Apr-08
	Incorporate TAA Comments	9d	29-Apr-08	13-May-08
	Commence Gogar Burn Bridge Informal Consultation With CEC Over Technical Approval	88d	22-Oct-07 A	28-Feb-08
	Gogar Culvert One Structure Review Period (TAA)	298d	30-May-07 A	29-Jul-08
	Issue Gogar Burn Culvert One Design Package to TAA	0d	21-May-08	
	TAA Gogar Burn Culvert One Design Package Review Period	38d	21-May-08	15-Jul-08
	Receive Gogar Burn Culvert One Design Package comments from TAA	0d	16-Jul-08	
	Incorporate TAA comments into Gogar Burn Culvert One Design Package	9d	16-Jul-08	29-Jul-08
	Commence Gogar Burn Culvert One Informal Consultation With CEC Over Technical Approval	41d	30-May-07 A	30-Jul-07 A
	Gogar Culvert One Structure Review Period (SEPA)	30d	21-May-08	01-Jul-08
	Issue Gogar Burn Culvert One Design Package to SEPA	0d	21-May-08	
	SEPA Gogar Burn Culvert One Design Package Review Period	19d	21-May-08	17-Jun-08

Activity ID	Activity Name	Original Duration	Start	Finish
	Receive Gogar Burn Culvert One Design Package comments from SEPA	0d	18-Jun-08	
	Incorporate SEPA comments into Gogar Burn Culvert One Design Package	9d	18-Jun-08	01-Jul-08
	Gogar Culvert Two Structure Review Period (TAA)	298d	30-May-07 A	29-Jul-08
	Issue Gogar Burn Culvert Two Design Package to TAA	0d	21-May-08	
	TAA Gogar Burn Culvert Two Design Package Review Period	38d	21-May-08	15-Jul-08
	Receive Gogar Burn Culvert Two Design Package comments from TAA	0d	16-Jul-08	
	Incorporate TAA comments into Gogar Burn Culvert Two Design Package	9d	16-Jul-08	29-Jul-08
	Commence Gogar Burn Culvert Two Informal Consultation With CEC Over Technical Approval	41d	30-May-07 A	30-Jul-07 A
	Gogar Culvert Two Structure Review Period (SEPA)	30d	21-May-08	01-Jul-08
	Issue Gogar Burn Culvert Two Design Package to SEPA	0d	21-May-08	
	SEPA Gogar Burn Culvert Two Design Package Review Period	19d	21-May-08	17-Jun-08
	Receive Gogar Burn Culvert Two Design Package comments from SEPA	0d	18-Jun-08	
	Incorporate SEPA comments into Gogar Burn Culvert Two Design Package	9d	18-Jun-08	01-Jul-08
	Gogar Culvert Three Structure Review Period (TAA)	298d	30-May-07 A	29-Jul-08
	Issue Gogar Burn Culvert Three Design Package to TAA	0d	21-May-08	
	TAA Gogar Burn Culvert Three Design Package Review Period	38d	21-May-08	15-Jul-08
	Receive Gogar Burn Culvert Three Design Package comments from TAA	0d	16-Jul-08	
	Incorporate TAA comments into Gogar Burn Culvert Three Design Package	9d	16-Jul-08	29-Jul-08
	Commence Gogar Burn Culvert Three Informal Consultation With CEC Over Technical Approval	41d	30-May-07 A	30-Jul-07 A
	Gogar Culvert Three Structure Review Period (SEPA)	30d	21-May-08	01-Jul-08
	Issue Gogar Burn Culvert Three Design Package to SEPA	0d	21-May-08	
	SEPA Gogar Burn Culvert Three Design Package Review Period	19d	21-May-08	17-Jun-08
	Receive Gogar Burn Culvert Three Design Package comments from SEPA	0d	18-Jun-08	
	Incorporate SEPA comments into Gogar Burn Culvert Three Design Package	9d	18-Jun-08	01-Jul-08
	Gogar Burn Retaining Wall One Review Period (TAA)	90d	08-May-08	10-Sep-08
	Issue Gogar Burn RW One Design Package to TAA	0d	03-Jul-08	
	TAA Gogar Burn RW One Design Package Review Period	38d	03-Jul-08	27-Aug-08
	Receive Gogar Burn RW One Design Package comments from TAA	0d	28-Aug-08	
	Incorporate TAA comments into Gogar Burn RW One Design Package	9d	28-Aug-08	10-Sep-08
	Commence Gogar Burn RW One Informal Consultation With CEC Over Technical Approval	38d	08-May-08	02-Jul-08
	Gogar Burn Retaining Wall Two Structure Review Period (TAA)	90d	08-May-08	10-Sep-08
	Issue Gogar Burn RW Two Design Package to TAA	0d	03-Jul-08	
	TAA Gogar Burn RW Two Design Package Review Period	38d	03-Jul-08	27-Aug-08
	Receive Gogar Burn RW Two Design Package comments from TAA	0d	28-Aug-08	
	Incorporate TAA comments into Gogar Burn RW Two Design Package	9d	28-Aug-08	10-Sep-08
	Commence Gogar Burn RW Two Informal Consultation With CEC Over Technical Approval	38d	08-May-08	02-Jul-08
	EARL Overbridge Review (TAA)	178d	15-Mar-07 A	19-Nov-07 A
	Issue Detailed Design Package to TAA - NO LONGER REQUIRED	0d		19-Nov-07 A
	Commence EARL Overbridge Informal Consultation With CEC Over Technical Approval	38d	15-Mar-07 A	14-May-07 A
	Roads Technical Approval	372d	26-Feb-07 A	07-Aug-08
	Issue Roads Design to Roads Authority for Approval	0d		14-May-08
	Roads Authority Approval Period	38d	15-May-08	10-Jul-08
	Receive Roads Authority Comments	0d		10-Jul-08
	Update to Roads Authority Comments	19d	11-Jul-08	07-Aug-08
	Roads Authority Informal Consultation	38d	26-Feb-07 A	24-Apr-07 A
	Roads Technical Approval Granted	0d		07-Aug-08
	Drainage Technical Approval	89d	14-Mar-08	16-Jul-08
	Roads Authority Informal Consultation For Drainage	38d	14-Mar-08	13-May-08
	Issue Drainage Design to Roads Authority for Approval	0d		13-May-08
	Roads Authority Approval Period For Drainage	38d	14-May-08	09-Jul-08
	Receive Roads Authority Comments For Drainage	0d		09-Jul-08
	Update to Roads Authority Comments For Drainage	5d	10-Jul-08	16-Jul-08
	Drainage Technical Approval Granted	0d		16-Jul-08
Track (Task800.2.1)		38d	08-Feb-07 A	03-Apr-07 A
	Issue Track Alignment Design to tie	0d		08-Feb-07 A
	tie Approval Period	19d	08-Feb-07 A	07-Mar-07 A
	Receive tie Comments	0d	03-Apr-07 A	
Roads, Street Lighting & Landscaping (Task800.2.2)		258d	09-Mar-07 A	14-Mar-08
	Issue Roads Design to tie for Approval Section 7	0d		09-Mar-07 A
	tie Approval Period	19d	12-Mar-07 A	10-Apr-07 A
	tie Comments Not Received - Change In Protocol Going Forward	0d		04-May-07 A
	Issue Notification Of Completion Letter- Hard & Soft Landscaping Design to tie Section 7A	0d		14-Mar-08
	Issue Street Lighting Design (Inc. Any OLE Combined Pole Design) to tie Section 7	0d		14-Mar-07 A
Drainage		0d	27-Sep-07 A	27-Sep-07 A
	Issue Drainage Design Completion Letter to tie for Approval Section 7A	0d		27-Sep-07 A
Boundary & Accomodation Works (Task800.2.3)		0d	20-Aug-07 A	20-Aug-07 A
	Issue Notification Of Completion Letter- Detailed Design of Boundary & Accomodation Works Section 7A	0d		20-Aug-07 A
Utilities (Task800.2.4)		74d	14-May-07 A	27-Aug-07 A
	Issue DD to SUC For Approval	0d		14-May-07 A
	SUC Approval Period	68d	15-May-07 A	27-Aug-07 A
Environmental		53d	22-Dec-06 A	16-Mar-07 A
	Issue Protected Species Plan to tie	0d		22-Dec-06 A
	tie Approval Period	17d	03-Jan-07 A	26-Jan-07 A
	Final Scottish National Heritage Approval Period	19d	19-Feb-07 A	16-Mar-07 A
	Issue New Setts/ Holt Design Section 7A	0d		08-Jan-07 A
VO50 Gogarburn Partnership Report CNS021		0d	24-Sep-07 A	24-Sep-07 A

USB00000084_0030

Activity ID	Activity Name	Original Duration	Start	Finish
	Issue SDS response to the review of the Gogarburn Partnership report	0d		24-Sep-07 A
GOG - IPR		450d	22-Sep-06 A	03-Jul-08
	Tram Stop Ingliston Park and Ride (Task800.2.7)	357d	22-Sep-06 A	22-Feb-08
	Issue Notification Of Completion Letter- Ingliston Tram Stop Design to tie	0d		22-Feb-08
	Site Visit with tie & CEC To Review Preliminary Design	1d	31-Jan-07 A	31-Jan-07 A
	Advance Levels Work (Liaision With Halcrows)	6d	22-Sep-06 A	29-Sep-06 A
	Structures	408d	20-Nov-06 A	03-Jul-08
	S29 Gogarburn Bridge (Task800.2.8)	287d	24-Nov-06 A	21-Jan-08
	Gogarburn Bridge Substructure Detailed Design	287d	27-Nov-06 A	21-Jan-08
	Issue Notification Of Completion Letter- Gogar Burn Bridge Substructure Package to tie	0d		14-Dec-07 A
	Issue Detailed Design Package to CAT II Checker (as appropriate)	0d		27-Nov-06 A
	Bridge CATII Review Period	246d	27-Nov-06 A	12-Dec-07 A
	Receive and Incorporate Substructure CATII Check Comments	246d	04-Jan-07 A	21-Jan-08
	Gogarburn Bridge Superstructure Detailed Design	268d	24-Nov-06 A	14-Dec-07 A
	Issue Notification Of Completion Letter- Gogar Burn Bridge Superstructure Package to tie for Comments	0d		14-Dec-07 A
	Issue Detailed Design Package to CAT II Checker	0d		24-Nov-06 A
	Bridge CATII Review Period	21d	27-Nov-06 A	03-Jan-07 A
	Receive and Incorporate Superstructure CATII Check Comments	172d	04-Jan-07 A	24-Sep-07 A
	S10 Gogar Culvert One	225d	02-Jul-07 A	20-May-08
	Structure Detailed Design	225d	02-Jul-07 A	20-May-08
	Issue Structure Detailed Design Package to CAT I Checker	0d	02-Jul-07 A	
	Structure CAT I Check ABANDONED	13d	03-Jul-07 A	20-Jul-07 A
	Receive & Incorporate CAT I comments	9d	23-Apr-08	06-May-08
	Re Issue Gogar Burn Culvert One Structure Revised Design Package to tie	0d		20-May-08
	Structure CAT I Check	19d	26-Mar-08	22-Apr-08
	Issue Notification Of Completion Letter- Gogar Burn Culvert One Structure Design Package to tie	0d		20-Nov-07 A
	Review Design & Amend if Necessary	30d	11-Feb-08	25-Mar-08
	Agree Drainage Interface	0d	25-Feb-08	
	VO29 S33 EARL Overbridge (Task800.2.13) CNS011	187d	20-Nov-06 A	17-Aug-07 A
	EARL Overbridge Superstructure Detailed Design	187d	20-Nov-06 A	17-Aug-07 A
	Issue Notification Of Completion Letter- EARL Overbridge Superstructure Package to tie	0d		17-Aug-07 A
	Issue Detailed Design Package to CAT II Checker	0d		20-Nov-06 A
	Bridge CATII Review Period	130d	10-Jan-07 A	27-Jul-07 A
	Receive and Incorporate CATII Check Comments	140d	10-Jan-07 A	10-Aug-07 A
	EARL Overbridge Substructure Detailed Design	186d	22-Nov-06 A	17-Aug-07 A
	Issue Notification Of Completion Letter- EARL Overbridge Substructure Package to tie	0d		17-Aug-07 A
	Issue Detailed Design Package to CAT II Checker	0d		22-Nov-06 A
	Bridge CATII Review Period	28d	22-Nov-06 A	10-Jan-07 A
	Receive and Incorporate CATII Check Comments	39d	11-Jan-07 A	09-Mar-07 A
	W14 Gogar Burn Retaining Wall One	78d	14-Mar-08	02-Jul-08
	Issue Revised PD to TAA	0d		14-Mar-08
	Issue Revised PD to tie	0d		14-Mar-08
	Receive Approved and Sign AIP document	0d	26-May-08	
	Recieve tie PD acceptance	0d	26-May-08	
	Receive TAA comments	0d	12-May-08	
	Update to TAA comments	9d	12-May-08	23-May-08
	Structure Detailed Design	40d	08-May-08	02-Jul-08
	Issue Structure Detailed Design Package to CAT I Checker	0d	08-May-08	
	Structure CAT I Check	19d	08-May-08	04-Jun-08
	Receive & Incorporate CAT I comments	9d	05-Jun-08	18-Jun-08
	Issue Notification Of Completion Letter- Gogar Burn Retaining Wall One Structure Design Package to tie	0d		02-Jul-08
	W15 Gogar Burn Retaining Wall Two	78d	14-Mar-08	03-Jul-08
	Issue Revised PD to TAA	0d		14-Mar-08
	Issue Revised PD to tie	0d		14-Mar-08
	Receive TAA acceptance	0d	12-May-08	
	Recieve tie acceptance	0d	12-May-08	
	Structure Detailed Design	40d	08-May-08	03-Jul-08
	Issue Structure Detailed Design Package to CAT I Checker	0d	08-May-08	
	Structure CAT I Check	19d	08-May-08	04-Jun-08
	Receive & Incorporate CAT I comments	9d	05-Jun-08	18-Jun-08
	Issue Notification Of Completion Letter- Gogar Burn Retaining Wall Two Structure Design Package to tie	0d	03-Jul-08	
	Tram Eastfield Road Substation (Task800.2.9)	0d	02-Apr-08	02-Apr-08
	Issue Notification Of Completion Letter- Tram Eastfield Road Substation Planning Submission to tie	0d		02-Apr-08
IPR - AIR		225d	02-Jul-07 A	20-May-08
	Tram Stop Edinburgh Airport (Task800.2.10)	0d	25-Mar-08	25-Mar-08
	Issue Notification Of Completion Letter- Edinburgh Airport Tram Stop Design to tie	0d		25-Mar-08
	Structures	225d	02-Jul-07 A	20-May-08
	S31 Gogar Burn Culvert Two	225d	02-Jul-07 A	20-May-08
	Structure Detailed Design	225d	02-Jul-07 A	20-May-08
	Issue Structure Detailed Design Package to CAT I Checker	0d	02-Jul-07 A	
	Structure CAT I Check ABANDONED	13d	03-Jul-07 A	20-Jul-07 A
	Receive & Incorporate CAT I comments	9d	23-Apr-08	06-May-08
	Re Issue Gogar Burn Culvert Two Structure Revised Design Package to tie	0d		20-May-08
	Structure CAT I Check	19d	26-Mar-08	22-Apr-08
	Review Design & Amend if Necessary	30d	11-Feb-08	25-Mar-08
	Agree Drainage Interface	0d	25-Feb-08	

USB00000084_0031

Activity ID	Activity Name	Original Duration	Start	Finish
	Issue Notification Of Completion Letter- Gogar Burn Culvert Two Structure Design Package to tie	0d		20-Nov-07 A
S34 Gogar Burn Culvert Three		225d	02-Jul-07 A	20-May-08
Structure Detailed Design		225d	02-Jul-07 A	20-May-08
	Issue Structure Detailed Design Package to CAT I Checker	0d	02-Jul-07 A	
	Structure CAT I Check ABANDONED	13d	03-Jul-07 A	20-Jul-07 A
	Receive & Incorporate CAT I comments	9d	23-Apr-08	06-May-08
	Re Issue Gogar Burn Culvert Three Structure Revised Design Package to tie	0d		20-May-08
	Structure CAT I Check	19d	26-Mar-08	22-Apr-08
	Review Design & Amend if Necessary	30d	11-Feb-08	25-Mar-08
	Agree Drainage Interface	0d	25-Feb-08	
	Issue Notification Of Completion Letter- Gogar Burn Culvert Three Structure Design Package to tie	0d		20-Nov-07 A

THIS IS SCHEDULE PART 16 REFERRED TO IN THE FOREGOING AGREEMENT BETWEEN TIE AND THE INFRACO

CEC01371137_0001

SCHEDULE PART 16

TRAM SUPPLY AGREEMENT

PLEASE REFER TO EXECUTED COPY OF TRAM SUPPLY AGREEMENT

CEC01371137_0002

(1) tie LIMITED

- and -

(2) CONSTRUCCIONES Y AUXILIAR DE FERROCARRILES S.A. (CAF)

TRAM SUPPLY AGREEMENT

in respect of

EDINBURGH TRAM NETWORK

CONTENTS

1. DEFINITIONS AND INTERPRETATIONS 2

2. CONDITIONS PRECEDENT 34

3. EFFECTIVE DATE, COMMENCEMENT DATE AND WORKS COMMENCEMENT DATE 35

4. TERM OF THE AGREEMENT 36

5. NOVATION 36

6. COMMENCEMENT OF TRAM WORKS 37

7. GENERAL OBLIGATIONS 37

7A. EQUIVALENT PROJECT RELIEF 42

7B. NOTICES, CONSENTS, APPROVALS, CERTIFICATES AND DETERMINATIONS 46

7C. TRAM SUPPLY ADVANCE WORKS AGREEMENT 46

8. PROJECT PARTNERING 46

9. SUPPORT FOR SYSTEM INTEGRATION 48

10. INTERFACE WITH THE OPERATOR 50

11. GENERAL WARRANTIES 55

12. CONSENTS 58

13. CLIENT'S REPRESENTATIVE 59

14. TRAM SUPPLIER'S REPRESENTATIVE 61

15. DESIGN DEVELOPMENT 62

16. MEETINGS 63

16A. WORK TO BE TO SATISFACTION OF THE CLIENT 64

16B. ERRORS AND OMISSIONS IN THE TRAM WORKS 64

17. TESTING AND COMMISSIONING INSPECTIONS 65

18. PERSONNEL 66

19. APPROVALS AND CONSENTS 68

20. CHANGES 69

21. TRAM SUPPLIER CHANGES 74

22. ADDITIONAL TRAMS 75

23. MOCK-UP 75

24. AUDIT AND INSPECTION 78

25. QUALITY ASSURANCE 79

26. PROGRAMMING OF TRAM DESIGN, MANUFACTURE, DELIVERY, TESTING AND COMMISSIONING 80

27. ACCELERATION 81

28. PRE-DELIVERY INSPECTIONS AND FACTORY ACCEPTANCE TESTS 83

29. DELIVERY 85

30. TRAM DELIVERY TESTS AND CERTIFICATION 86

31. TRAINING, COMMISSIONING, TESTING AND CERTIFICATION 87

31A. TRAM PAYMENT MILESTONE CERTIFICATION AND APPROVAL 90

32. REPEATED TESTING AND COMMISSIONING FAILURES 92

33. TRAM DOCUMENTATION 94

34. SPARES AND SPECIAL TOOLS 96

35. RISK AND TITLE 97

36. WARRANTY REGIME 99

37. USE OF THE DEPOT 103

38. PRICE AND PAYMENT 104

39. VAT 108

40. REQUIRED INSURANCES 109

41. LIABILITY, INDEMNITIES, RETENTION AND LIQUIDATED DAMAGES 115

42. MAINTENANCE HANDOVER 122

43. MITIGATION 122

44. BONDS AND COLLATERAL WARRANTY 123

45. TRAM SUPPLIER DELAYS 123

46. NOT USED 124

47. RELIEF EVENTS 125

48. QUALIFYING CHANGES IN LAW 128

49. COMPENSATION EVENTS 130

50. BEST VALUE 133

51. COPYRIGHT AND INTELLECTUAL PROPERTY 135

52. CONFIDENTIAL INFORMATION 142

53. PROTESTOR ACTION 146

54. SUSPENSION OF WORK 147

55. TRAM SUPPLIER DEFAULT TERMINATION 148

56. PERSISTENT BREACH 150

57. CLIENT DEFAULT TERMINATION 151

58. NO FAULT TERMINATION 152

59. TERMINATION ON FORCE MAJEURE 153

60. TERMINATION FOR CORRUPT GIFTS AND FRAUD 154

61. RISK MANAGEMENT 155

62. PAYMENT ON TERMINATION 155

63. EFFECT OF TERMINATION OR EXPIRY 157

64. DISPUTE RESOLUTION 159

65. DEROGATIONS 159

66. VARIATIONS TO BE IN WRITING 159

67. WAIVER AND CUMULATIVE REMEDIES 159

68. NOTICES 160

69. ASSIGNATION, CHANGES IN LEGAL STATUS, CHANGES IN CONTROL AND SUB-CONTRACTING 161

70. CONFLICT OF INTEREST 163

71. SECURITY INTERESTS 164

72. DATA PROTECTION 164

73. ENTIRE AGREEMENT 165

74. CONSENT AND APPROVAL 165

75. DISCRIMINATION 166

76. FURTHER ASSURANCE 166

77. APPLICABLE LAW 166

78. NO PARTNERSHIP OR AGENCY 166

79. INVALID TERMS 167

80. THIRD PARTY RIGHTS 167

SCHEDULE 1 - CONDITIONS PRECEDENT .....

Part 1 - Commencement Conditions Precedent .....

Part 2 - Conditions Precedent Documents .....

Tram Supplier Novation Agreement .....

Schedule of Amendments to the Tram Supply Agreement .....

Collateral Warranty .....

Novation Agreement Escrow Letter .....

SCHEDULE 2 - EMPLOYER'S REQUIREMENTS .....

Part 1 - Employer's Requirements .....

Part 2 - Tram Documentation .....

Part 3 - Training Schedule .....

Part 4 - Spare Parts .....

Part 5 - Special Tools .....

SCHEDULE 3 - DEPOT SUB-LICENCE .....

SCHEDULE 4 - PROGRAMME .....

Part 1 - Tram Manufacturing and Delivery Programme .....

Part 2 - Tram Documentation Delivery Programme .....

Part 3 - NOT USED .....

Part 4 - Project Quality Assurance Programme .....

Part 5 - Deliverables Programme .....

SCHEDULE 5 - PAYMENTS .....

Part 1 - Milestone Payment Schedule .....

Part 2 - Liquidated Damages for Weight .....

SCHEDULE 6 - KEY PERSONNEL .....

SCHEDULE 7 - NOT USED .....

SCHEDULE 8 - ESCROW AGREEMENT .....

SCHEDULE 9 - REVIEW PROCEDURE .....

SCHEDULE 10 - BONDS AND COLLATERAL WARRANTY .....

Part A - Reliability Bond .....

Part B - Tram Supplier Collateral Warranty .....

Part C - Advanced Payment Bond .....

Part D - Performance Bond .....

SCHEDULE 11 - REQUIRED INSURANCES .....

Part 1 - Reqired Insurances .....

Part 2 - Broker's Letter of Undertaking .....

Part 3 - Insurance Questionnaire .....

SCHEDULE 12 - CERTIFICATES .....

Part 1 - Factory Acceptance Test Certificate .....

Part 2 - Factory Acceptance Type Test Certificate .....

Part 3 - Certificate of Tram Delivery .....

Part 4 - Tram Site Commissioning Type Test Certificate .....

Part 5 - Tram Site Commissioning Routine Test Certificate .....

Part 6 - Tram Rejection Notice .....

SCHEDULE 13 - DISPUTE RESOLUTION PROCEDURE .....

SCHEDULE 14 - PANEL FOR THE DISPUTE RESOLUTION PROCEDURE .....

SCHEDULE 15 - RISK MANAGEMENT .....

SCHEDULE 16 - COMMERCIALLY SENSITIVE INFORMATION .....

SCHEDULE 17 - CODE OF CONSTRUCTION PRACTICE AND CODE OF MAINTENANCE PRACTICE .....

Part 1 - Code of Construction Practice.....

Part 2 - Code of Maintenance Practice.....

SCHEDULE 18 - SUB-CONTRACTOR DIRECT AGREEMENT .....

SCHEDULE 19 - ADDITIONAL TRAMS.....

SCHEDULE 20 - TIE AND CEC POLICIES .....

SCHEDULE 21 - REPORTING PERIOD END DATES .....

SCHEDULE 22 - INEO BUSTRACKER VEHICLE LOCATION SYSTEM .....

SCHEDULE 23 - TRAM SUPPLIER'S PROPOSALS.....

TRAM SUPPLY AGREEMENT

BETWEEN

(1) **tie LIMITED** a company registered in Scotland under company number SC230949 whose registered office is at City Chambers, High Street, Edinburgh, Midlothian, EH1 1YJ ("**Client**") and which expression shall includes its successors, permitted assignees and transferees; and

(2) **CONSTRUCCIONES Y AUXILIAR DE FERROCARRILES S.A. (CAF)** a company registered in Spain in the Corporate Register of Guipuzcoa: volume 983, sheet 144, page number SS-329, entry 239 and having its registered office at J.M. Iturrioz 26, 20200 Beasain (Guipuzcoa) – Spain ("**Tram Supplier**") which expression shall include its personal representatives, successors, permitted assignees and transferees;

each a "**Party**" and together the "**Parties**".

WHEREAS

A On 28 November 2005, **tie** published in the Official Journal of the European Union notice of its intention to seek offers for the provision of Trams in respect of the Edinburgh Tram Network and following a procurement contest conducted in accordance with the Public Supply Contracts Regulations 1995 (SI 1995/201), has appointed the Tram Supplier for the provision of such Trams on the terms of this Agreement.

B By virtue of the Tram Legislation, CEC has been granted the requisite authorities and statutory powers to construct, operate and maintain Line One and Line Two.

C On 31 January 2006 **tie** published in the Official Journal of the European Union notice of its intention to seek offers for the provision of infrastructure works (including systems integration services) for Line One and Line Two. Pursuant to a procurement contest to be completed after the Effective Date, **tie** intends to appoint Infraco to provide such services.

D If required by **tie**, **tie** and the Tram Supplier have agreed that this Agreement will be novated by **tie** to Infraco or another party, with the intention that such party shall take over the rights and liabilities of the "Client" under this Agreement and will, thereafter, be responsible to **tie** for the supply of Trams as part of its responsibilities to **tie**. The Tram Supplier agrees to such novation on the terms set out in this Agreement.

E The Trams will be operated by the Operator.

TIE00899939_0009

F This Agreement sets out the terms on which the Client shall procure from the Tram Supplier the design, manufacture, delivery, testing and commissioning of 27 Trams for use on the System with an option to purchase Additional Trams.

G It is acknowledged that this Agreement forms part of a suite of documents which together aim to achieve a project vision (the "**Project Vision**") for the Edinburgh Tram Network. This Project Vision involves the development of a tramway which will stand favourable comparison with the best in Europe. The quality of the tramway provided will be appropriate to Edinburgh's status and role as a European capital city and its city centre's designation as a World Heritage Site. The tramway will integrate as far as possible with other transport modes to serve the existing fabric of the City of Edinburgh, and promote appropriate development and social inclusion. It is intended that this goal be achieved in a spirit of partnership, utilising modern design and construction methods and standards.

NOW IT IS AGREED AS FOLLOWS:

1. DEFINITIONS AND INTERPRETATIONS

1.1 In this Agreement unless the context otherwise requires the following words and expressions shall have the following meanings:

"**Accounts**" means in respect of the Tram Supplier such accounting records as are required to be kept under section 386 of the Companies Act 2006, to be prepared on a consistent basis for each consecutive period not exceeding one month;

"**Additional Insurances**" has the meaning given to it in Clause 40.17;

"**Additional Trams**" means Tram unit(s) which may be ordered by the Client in accordance with Clause 22.1;

"**Additional Trams Order**" has the meaning given to that term in Clause 22.1;

"**Advance Payment Bond**" means the advance payment bond in the form set out in part C of Schedule 10 (*Bonds and Collateral Warranty*);

"**Affected Party**" means a Party that is unable to comply with all or a material part of its obligations under this Agreement as a direct result of a Force Majeure Event;

"**Affiliate**" means in relation to any person, any holding company or subsidiary of that person or any subsidiary of such holding company and "holding company" and "subsidiary" shall have the meanings given to them in sections 1159 and 1160 of the Companies Act 2006;

TIE00899939/0010

"**Aggregate Tram Price**" means the sum of fifty five million seven hundred and eighty one thousand and six hundred and thirty three pounds sterling (£55,781,633), this aggregate contract sum includes 27 trams plus spare parts plus depot equipment;

"**Agreed Commissioning Date**" means in respect of each Tram the date set out in part 1 of Schedule 4 (*Programme*) on which a Certificate of Tram Commissioning is due to be issued in respect of such Tram;

"**Agreed Delivery Date**" means in respect of each Tram the date set out in part 1 of Schedule 4 (*Programme*) on which each Tram is to be delivered to the Depot;

"**Agreement**" means Clauses 1 to 80 (inclusive) together with Schedules 1 to 23 (inclusive) which are annexed and signed as relative hereto, all as may be amended from time to time in accordance with this Agreement;

"**Annual Service Report**" has the meaning given to it in Clause 50.4;

"**Approval Bodies**" means any Relevant Authorities, Utilities, CEC, planning authorities, roads authorities, HMRI, BAA, Network Rail and any other parties who are to issue Consents which may be required for the construction, installation, commissioning, completion, opening maintenance, use or modification of the Edinburgh Tram Network;

"**Assets**" means all assets and rights to enable CEC, TEL, **tie** Limited or another party to own, operate and maintain and extend the Edinburgh Tram Network in accordance with this Agreement, including:

(a) any equipment;

(b) any books and records (including the operating and maintenance manual, health and safety manuals and other know-how) relating specifically to the Tram Supplier's works;

(c) any Trams, Spare Parts, Special Tools and other assets (together with any warranties in respect of assets being transferred); and

(d) any Project IPR or any licence relating to Tram Supplier IPR;

(e) any contractual rights;

(f) any Intellectual Property Rights;

TIE00899939_0011

but excluding any assets and rights in respect of which **tie** is full, legal and beneficial owner;

"**Background Information**" means all and any materials, documents, drawings, plans or other information in paper, electronic or any other form, relating in any way to this Agreement or the Tram Legislation (and the parliamentary process) and made available to the Tram Supplier by **tie**, CEC, any **tie** Party, the Client, any Client Party and/or any of their respective members, officers, agents and/or advisers in connection with this Agreement or during the procurement competition relating to this Agreement or thereafter;

"**Base Case RPIX**" means RPIX as at September 2007;

"**Best Value Improvement Plan**" means the plan referred to in Clause 50.8;

"**Bill**" means a document which constitutes draft primary Legislation;

"**Business Day**" means any day other than a Saturday or Sunday or a day which is a public holiday recognised by CEC;

"**Calibrated Tram Weight**" has the meaning given to it in paragraph 1 of part 2 of Schedule 5 (*Payments*);

"**Case for Safety**" means all necessary documentation, information and other requirements for the issue of a safety certificate or a safety authorisation (as appropriate) by the Office of the Rail Regulator pursuant to the Railways and Other Guided Transport Systems (Safety) Regulations 2006;

"**CDM**" means Construction (Design and Management) Regulations 2007 (SI 2007/320);

"**CEC**" means the City of Edinburgh Council or its statutory successors;

"**Certificate of Tram Commissioning**" means the certificate to be issued by the Tram Inspector in accordance with Clause 31 (*Training, Commissioning, Testing and Certification*) in the form set out in Schedule 12 (*Certificates*);

"**Certificate of Tram Delivery**" means the certificate to be issued by the Tram Inspector in accordance with Clause 30 (*Tram Delivery Tests and Certification*) in the form set out in Schedule 12 (*Certificates*);

"**Change in Control**" means any sale or disposal of any legal, beneficial or equitable interest in share capital comprising 30% of a corporation, or the transfer or acquisition of the ability to direct the management and control of the corporation;

TIE00899939_0012

"**Change in Law**" means the coming into effect after 14 September 2007, of:

(a) Legislation, other than any Legislation which on or before 14 September 2007 has been published:

(i) in a draft Bill as a part of a Scottish Executive/Scottish Parliament or United Kingdom Government consultation paper;

(ii) in a Bill;

(iii) in draft subordinate Legislation within the meaning of section 21(1) of the Interpretation Act 1978; or

(iv) as a proposal in the Official Journal of the European Union or as a common position adopted by the European Parliament; or

(b) any Guidance (other than Guidance which on 14 September 2007, has been published (in draft or otherwise) or changes in Guidance; or

(c) any applicable judgement of a relevant court of law which changes binding precedent;

"**Change Procedure**" means the variation procedure set out in Clause 20 (*Changes*);

"**Client Change**" means any addition, modification, reduction or omission in respect of the Tram Works or any other term of this Agreement instructed by the Client in accordance with Clause 20 (*Changes*);

"**Client Change Order**" means the written confirmation issued by the Client to proceed with a Client Change on the basis of an Estimate (as modified, if required);

"**Client Claim**" means a relief or entitlement pursuant to the Infraco Contract (other than in respect of compensation on termination payment) to which the Client is or becomes or may become entitled under the Infraco Contract which is equivalent to and/or consistent with relief or entitlement pursuant to and under the same circumstances as an EPR Claim;

"**Client Default**" shall have the meaning given to it in Clause 57.1;

"**Client Notice of Change**" means a notice served by the Client pursuant to Clause 20.1 setting out the matters specified in Clause 20.2;

TIE00899939_0013

"**Client Party**" means any advisers appointed by the Client or any of the Client's employees, agents, contractors and Sub-contractors of any tier and its or their directors, officers and employees (excluding the Tram Supplier or any Tram Supplier Party);

"**Client's Programme**" means the programme for the Infraco Works which shall be notified to the Tram Supplier and updated from time to time;

"**Client's Representative**" means the person or persons appointed by the Client from time to time and notified to the Tram Supplier;

"**Code**" means the Scottish Ministers' Code of Practice on the Discharge of Functions by Public Authorities under the Freedom of Information (Scotland) Act 2002 as the same may be amended, varied or replaced from time to time;

"**Code of Construction Practice**" means the code set out in part 1 of Schedule 17 (*Code of Construction Practice and Code of Maintenance Practice*);

"**Code of Maintenance Practice**" means the code set out in part 2 of Schedule 17 (*Code of Construction Practice and Code of Maintenance Practice*);

"**Commencement Conditions Precedent**" shall mean the conditions set out in part 1 of Schedule 1 (*Conditions Precedent*);

"**Commencement Date**" means the date on which the Tram Supplier has been notified by the Client that all of the Commencement Conditions Precedent have been either satisfied, waived or in respect of which the Client has notified the Tram Supplier that they may be treated as Works Conditions Precedent;

"**Commercially Sensitive Information**" means the subset of Confidential Information listed in Schedule 16 (*Commercially Sensitive Information*) comprised of information:

(a) which is provided by the Tram Supplier to the Client in confidence for the period set out in that schedule; and/or

(b) that constitutes a trade secret;

"**Compensation Event**" means the occurrence of any of the following:

(a) on any date on or after the Agreed Delivery Date in respect of the first Tram, of the issue of a Factory Acceptance Type Test Certificate and a Factory Acceptance Routine Test Certificate in respect of a Tram in accordance with Clause 28 (*Pre-*

Delivery Inspections and Factory Acceptance Tests) where the Depot is not ready to accept delivery following the issue of such certificates such that the Tram Supplier cannot despatch the Trams to the Depot; or

(b) of a breach by the Client and/or the Tram Inspector of their respective obligations under this Agreement and/or the Tram Inspector Agreement which has a material adverse effect on the ability of the Tram Supplier to perform its obligations under this Agreement in relation to the achievement of the Tram Delivery Tests, the Tram Commissioning Type Tests, the Tram Commissioning Routine Tests and/or the Training Programme in accordance with the timescales set out in the Tram Manufacturing and Delivery Programme and/or Training Schedule (as appropriate); or

(c) of a breach by the Client of its obligation to give (or procure) access to the Depot in accordance with the provisions of the Depot Sub-Licence which has a material adverse effect on the ability of the Tram Supplier to perform its obligations under this Agreement; or

(d) Protestor Action which exceeds 1 day in duration;

"**Conditions Precedent**" shall mean the Commencement Conditions Precedent and the Works Conditions Precedent;

"**Confidential Information**" means any information which has been designated as confidential by either Party in writing or that ought to be considered as confidential (however it is conveyed or on whatever media it is stored) including information which relates to the business, affairs, properties, assets, trading practices, goods, services, developments, trade secrets, Intellectual Property Rights, know-how, personnel of either Party, all personal data and sensitive personal data within the meaning of the Data Protection Act 1998;

"**Consents**" means without limitation all permissions, consents, approvals, certificates, permits, licences, agreements and authorisations (including those required by Law) needed to carry out the Tram Works and any reference t o "consent" shall mean written consent;

"**Construction Panel**" has the meaning given to it in paragraph 19.1 of Schedule 13 (*Dispute Resolution Procedure*);

"**Control Centre**" means the control centre for the Edinburgh Tram Network to be provided by the Infraco pursuant to the Infraco Contract and operated by the Operator pursuant to the DPOFA;

TIE00899939_0015

"**Defect Notice**" shall have the meaning given to it in Clause 36.2.1.1;

"**Delay**" shall have the meaning given to it in Clause 45.1;

"**Deliverables**" means the designs, Design Data and other deliverables as set out in part 5 of Schedule 4 (*Programme*) to be provided by the Tram Supplier in accordance with the Deliverables Programme;

"**Deliverables Programme**" means the programme set out in part 5 of Schedule 4 (*Programme*);

"**Delivery Acceptance Tests**" means the acceptance tests to be carried out on each Tram as set out in section 23 of the Employer's Requirements;

"**Delivery Retention**" shall have the meaning given to it in Clause 41.21;

"**Delivery Retention Repayment**" shall have the meaning given to it in Clause 41.23;

"**Depot**" means the depot at Gogar comprising maintenance facilities, stabling facilities, sidings, operations, cleaning facilities, the Control Centre, storage facilities and accommodation for operational and maintenance staff;

"**Depot Equipment**" means the equipment which is identified as being supplied by the Tram Supplier in table 83 of section 29 of the Employer's Requirements;

"**Depot Sub-Licence**" means the sub-licence to the Depot in the form annexed to Schedule 3 (*Depot Sub-Licence*);

"**Depot Plan**" means the plan of the Depot annexed to the Depot Sub-Licence;

"**Design Data**" means all drawings, specifications, systems, statements, procedures, proposals, reports, documents, plans, software, formulae, calculations and data relating to the design, construction, testing, commissioning, completion and/or operation of the Trams and/or Tram Works;

"**Design Development Services**" means the production of designs pursuant to Clause 15 (*Design Development*);

"**Developed Kinematic Envelope**" has the meaning given to that term in Railway Safety Publication 2;

TIE00899939_0016

"**Discriminatory Change in Law**" means a Change in Law, the terms of which apply expressly to:

(a) the Edinburgh Tram Network; and/or

(b) the Tram Supplier and not to other persons;

"**Dispute**" means any dispute, difference or unresolved claim between the Parties in connection with or arising from this Agreement;

"**Dispute Resolution Procedure**" means the procedure provided for in Clause 64 (*Dispute Resolution*) and set out in Schedule 13 (*Dispute Resolution Procedure*);

"**DPOFA**" means the development partnering and operating franchise agreement between **tie** and the Operator dated 14 May 2004 as amended at 20 December 2007;

"**Edinburgh Tram Network**" means the tramway which is to be designed, constructed and maintained in Edinburgh pursuant to the Infraco Contract in Phase 1a (forming part of Line One and Line Two as described in the Tram Legislation (and Phase 1b if built) together with all associated works and facilities including all civil engineering and track works, Trams, infrastructure, plant, machinery and equipment installed or used for such tramway;

"**Effective Date**" means the last date of execution of this Agreement;

"**Emergency Services**" means Lothian and Borders Police, Lothian and Borders Fire Brigade, British Transport Police, Scottish Ambulance Services and HM Coastguard;

"**EMC Directive**" means the Electromagnetic Compatibility Directive (2004/108/ECJL390);

"**EPR Claim**" means a relief or entitlement or payment pursuant to this Agreement to which the Tram Supplier is or becomes or may become entitled pursuant to either a:

(a) Compensation Event,

(b) Relief Event;

(c) Force Majeure Event;

(d) Client Change;

(e) Change in Law; or,

(f) any other rights to claim additional payment or relief;

TIE00899939_0017

"**Employer's Requirements**" means the requirements set out in part 1 of Schedule 2 (*Employer's Requirements*);

"**Environmental Information Regulations**" means the Environmental Information (Scotland) Regulations 2004, Scottish SI 2004/520;

"**Escrow Agreement**" means the agreement relating to the Software and/or any Tram Documentation set out in Schedule 8 (*Escrow Agreement*);

"**Escrow Release Event**" has the meaning given to it in the Escrow Agreement;

"**Estimate**" shall have the meaning given to it in Clause 20.2.2;

"**Excess Tram Weight**" has the meaning given to it in paragraph 2 of part 2 of Schedule 5 (*Payments*);

"**Expiry Date**" shall have the meaning given to it in Clause 4.1;

"**Extended Tram Warranty Defects**" means a design defect in relation to an Extended Tram Warranty Part which causes a mechanical or structural failing to that Tram and which:

(a) prevents that Tram operating in accordance with the performance standards set out in the Tram Requirements Specification; and/or

(b) has the effect of shortening the design life of that Tram to a period shorter than 30 years;

"**Extended Tram Warranty Part**" means the bogie frames, axle boxes, gear boxes, slewing rings (or equivalent), traction motors and/or major components of the carshell structure of a Tram;

"**Extended Tram Warranty Period**" means a period of 10 years from the Tram Maintenance Commencement Date;

"**Factory**" has the meaning given to it in Clause 7.4;

"**Factory Acceptance Routine Test Certificate**" means the certificate to be issued by the Tram Inspector in accordance with Clause 28 (*Pre-Delivery Inspections and Factory Acceptance Tests*) in the form set out in Schedule 12 (*Certificates*);

TIE00899939_0018

"**Factory Acceptance Routine Tests**" means the factory acceptance tests and other relevant static inspections and dynamic tests to be carried out on all Trams as set out in section 23.4 of the Employer's Requirements;

"**Factory Acceptance Tests**" means together the Factory Acceptance Routine Tests and the Factory Acceptance Type Tests;

"**Factory Acceptance Type Test Certificate**" means the certificate to be issued by the Tram Inspector in accordance with Clause 28 (*Pre-Delivery Inspections and Factory Acceptance Tests*) in the form set out in Schedule 12 (*Certificates*);

"**Factory Acceptance Type Tests**" means the factory acceptance tests and other relevant static inspections and dynamic tests to be carried out on specified Trams as set out in section 23 of Schedule 2 (*Employer's Requirements*););

"**Final Persistent Breach Notice**" shall have the meaning given to it in Clause 56.2 ;

"**Financial Panel**" has the meaning given to it in paragraph 19.1 of Schedule 13 (*Dispute Resolution Procedure*);

"**Fleet Tram Defect**" means a Tram Defect which:

(a) has occurred during a consecutive period of:

(i) 12 months in respect of any 4 Trams; or

(ii) 18 months in respect of any 6 Trams; and

(b) affects 15% of the component assemblies (interchangeable units) or subassemblies of the same type in respect of those Trams referred to in paragraph (a) above;

"**Fleet Tram Defect Period**" means:

(a) a period from the date on which the first Tram is issued with a Certificate of Tram Commissioning until the date on which the last Tram to be issued with a Certificate of Tram Commissioning is issued with a Certificate of Tram Commissioning; and

(b) once the last Tram to be issued with a Certificate of Tram Commissioning is issued with a Certificate of Tram Commissioning a period until 2 years after the date on which Passenger Services commence;

TIE00899939_0019

"**FOISA**" means the Freedom of Information (Scotland) Act 2002 and any subordinate legislation made under that Act from time to time together with any guidance and/or codes of practice issued by the Scottish Information Commissioner in relation to such legislation;

"**Force Majeure Event**" means the occurrence after the Effective Date of:

(a) war, civil war or armed conflict in the United Kingdom and Spain; or

(b) nuclear, chemical or biological contamination unless the source or cause of the contamination is the result of actions of the Tram Supplier or any Tram Supplier Party; or

(c) pressure waves caused by devices travelling at supersonic speeds; or

(d) exceptionally adverse weather conditions affecting shipment or transportation of Tram;

"**General Change in Law**" means a Change in Law which is not a Qualifying Change in Law;

"**Good Industry Practice**" means using standards, practices, methods and procedures conforming to the Law and exercising that degree of skill, care, diligence, prudence and foresight that would reasonably be expected from a large, reputable, professionally qualified, competent and skilled organisation experienced in carrying out a similar type of undertaking to those comprised in the design, manufacture, supply and maintenance of Trams and seeking in good faith to comply with its contractual obligations and all duties owed by it;

"**Guidance**" means any applicable guidance, policy, direction or determination issued by any regulatory body with which the Client, **tie**, CEC, the Operator, the Tram Supplier and/or the Tram Supplier Parties and/or its Sub-contractors are bound to comply and, to the extent not published or otherwise publicly available is made available to the Tram Supplier and shall include the **tie** and CEC Policies;

"**Hardware Intellectual Property Rights**" means any Intellectual Property Rights which are not Software Intellectual Property Rights and which are the property of the Tram Supplier and/or which the Tram Supplier obtains under the terms of this Agreement;

"**HMRI**" means Her Majesty's Railway Inspectorate;

"**Identified Defect**" shall have the meaning given to it in Clause 36.2.1.1.(a);

TIE00899939_0020

"**Indemnified Liabilities**" means actions, claims (including third party claims) demands, proceedings, losses, damages, liabilities, costs and expenses (including legal and other professional charges and expenses);

"**Indemnified Parties**" shall have the meaning given to it in Clause 41.1;

"**Independent Competent Person**" means Interfleet or such other person appointed by **tie** to agree and oversee the implementation of all procedures and processes to comply with the provisions of the Railway and Other Guide Transport System (Safety) Regulations 2006 and to enable permitting for the testing, commissioning and operation of the Edinburgh Tram Network;

"**Indexed**" means in relation to an amount, that amount to be multiplied by the value of RPIX at the Point of Indexation, divided by the Base Case RPIX to generate a percentage movement;

"**Indirect Loss**" means any damage, cost, third party claim, expense or loss incurred by a Party to this Agreement or Client Party (or an Indemnified Party) as a consequence of a breach of this Agreement or a negligent act or omission which relates to consequential or indirect loss of profits, or loss of revenue, loss of use, loss of production or output, interruption or loss of business or business opportunity or other consequential or indirect loss, loss of contract, loss of goodwill and whether or not the Party committing the breach knew, or ought to have known, that such indirect or consequential loss would be likely to be suffered as a consequence of such breach;

"**Infraco**" means the contractor to be selected and appointed by **tie** which will be responsible for carrying out and/or managing a comprehensive turnkey contract including the design, construction, installation, commissioning, tram procurement, system integration, infrastructure maintenance, tram maintenance, and supply of related equipment and materials, trams and related infrastructure in relation to the Edinburgh Tram Network or any successor appointed by **tie** and notified to the Tram Supplier by notice in writing from time to time;

"**Infraco Contract**" means the contract to be entered into by **tie** with the Infraco;

"**Infraco Party**" means each and any of the Infraco's employees, directors, officers, agents, professional advisors, consultants and contractors and its or their Sub-contractors (of any tier) and shall include its or their directors, officers and employees as they are involved in relation to the Infraco Works and "Infraco Parties" shall be construed accordingly;

TIE00899939_0021

"**Infraco Works**" means as the context requires, all or any of the works to be constructed and completed and/or services to be provided and/or the plant, machinery and equipment to be supplied and installed by the Infraco in accordance with the Infraco Contract and which are necessary to deliver a fully functional tram system in Edinburgh, and to subsequently maintain such system all in accordance with the Employer's Requirements;

"**Insolvency Event**" means any of the following events:

(a) the Tram Supplier is unable to pay its debts as they fall due or is insolvent or admits (in writing) its inability to pay its debts as they fall due;

(b) the Tram Supplier suspends for a period of two months making payments on all or any class of its debts or a moratorium is declared by the Tram Supplier in respect of its indebtedness;

(c) the Tram Supplier ceases business or announces an intention to do so;

(d) the following are entered into:

  (i) a voluntary arrangement (other than a solvent one) for a composition of debts of the Tram Supplier;

  (ii) a scheme of arrangement in respect of the Tram Supplier pursuant to the Insolvency Act 1986 or arrangement in the context of insolvency pursuant to the Companies Act 2006; or

  (iii) a material composition or arrangement other than a solvent one with the Tram Supplier's creditors;

(e) either of the following:

  (i) the winding-up of the Tram Supplier (including passing a shareholders' resolution or the presentation of a petition by the Tram Supplier for the purpose of winding up the Tram Supplier); or

  (ii) its administration (including where an application is made by the Tram Supplier for, or petition is presented by the Tram Supplier for, or any meeting of its directors or members resolves to make an application for, an administration order);

(f) an order for the winding-up or administration of the Tram Supplier is made;

TIE00899939_0022

(g) any liquidator, judicial custodian, receiver, administrative receiver, administrator or the like is appointed in respect of the Tram Supplier or any material part of the Tram Supplier's assets;

(h) possession is taken of, or any distress, execution or other process (other than on the dependence or inhibition) is levied or enforced upon, any material part of the property (whether real or personal) of the Tram Supplier by or on behalf of any creditor or encumbrancer of the Tram Supplier; or

(i) anything analogous to any of the events mentioned in paragraphs (a) to (h) above occurs in relation to the Tram Supplier under the law of any relevant jurisdiction including but not limited to Spanish Law 22/2003 of July 9 and Spanish Law 1564/1989 of December 22;

"**Intellectual Property Rights**" or "**IPR**" means any rights in or to any patent, design right, utility model, trade mark, brand name, service mark, trade name, business name, logo, invention (whether registered or unregistered), domain name, semi-conductor right, topography right, software designs and/or other materials, source code, copyright, moral right, know-how or rights in databases and any other rights in respect of any industrial or intellectual property, whether capable of being registered or not, including all rights to apply for any of the foregoing rights or for an extension, revival or renewal of any of the foregoing rights and any similar or analogous rights to any of the above, whether arising or granted under the law of Scotland or of any other jurisdiction;

"**Interim Certificate**" shall have the meaning ascribed to it in Clause 38.5;

"**Internal Resolution Procedure**" means the procedure described in paragraphs 10 and 11 of Schedule 13 (*Dispute Resolution Procedure*);

"**IPR Claim**" means any claim of infringement or alleged infringement (including to the defence of such infringement or alleged infringement) of any IPR used to design, manufacture, engineer, supply, test, commission, sell, deliver, maintain or operate the Trams or as otherwise provided by the Tram Supplier to the Client in the fulfilment of its obligations under this Agreement;

"**Key Personnel**" means those persons listed in Schedule 6 (*Key Personnel*);

"**Late Tram**" has the meaning ascribed to it in the Tram Maintenance Agreement;

"**Law**" means:

TIE00899939/0023

(a) any Legislation;

(b) any Guidance; and

(c) any judgment of a relevant court of law which is a binding precedent,

in each case in force or applicable in Scotland;

"**Legislation**" means any Act or instruments of the Scottish Parliament or the United Kingdom Parliament or subordinate legislation within the meaning of section 21(1) of the Interpretation Act 1978, any exercise of the Royal Prerogative, and any enforceable community right within the meaning of section 2 of the European Communities Act 1972 and any bye-laws of any Local (or other statutory) Authority;

"**Legal Opinion**" means a legal opinion from a law firm satisfactory to the Client acting reasonably in a form acceptable to the Client acting reasonably;

"**Legal Panel**" has the meaning given to it in paragraph 19.1 of Schedule 13 (*Dispute Resolution Procedure*);

"**Line One**" means the tramway works as authorised by the Edinburgh Tram (Line One) Act 2006;

"**Line Two**" means the tramway works as authorised by the Edinburgh Train (Line Two) Act 2006;

"**Liquidated Damages**" means the liquidated damages payable pursuant to Clause 41 (*Liability, Indemnities, Retention and Liquidated Damages*) (as the context requires);

"**Local Authority**" means CEC or any local authority established pursuant to the Local Government (Scotland) Acts 1973 and 1994 (as these statues may be amended) or their statutory successors or any regional transport partnership or body established pursuant to the Transport (Scotland) Act 2005;

"**Losses**" means all damages, losses, liabilities, costs, expenses (including legal and other professional charges and expenses) and charges whether arising under statute, contract or at common law or in connection with judgments, proceedings, internal costs or demands;

"**Material Change**" means a change that makes a significant difference to the way in which the Tram is operated and/or a significant difference to the environment in which it operates;

TIE00899939_0024

"**Maximum Tram Weight**" means the maximum weight of a tare Tram of 55.85 tonnes;

"**Milestone**" means the output to be achieved before payment of a Milestone Payment set out in the Milestone Payment Schedule;

"**Milestone Payment**" means the payment to be made against the achievement of a Milestone for an amount set out in the Milestone Payment Schedule;

"**Milestone Payment Schedule**" means the schedule of Milestones and Milestone Payments set out at part 1 of Schedule 5 (*Payments*);

"**Mobilisation Cost**" means the agreed fixed cost of mobilising to produce Additional Trams if an Additional Trams Order is placed more than 17 months after the Effective Date, in the sum of 2,886,000 Euros to restart production;

"**Mock Up Production**" means the production of a Tram mock-up in accordance with Clause 23 (*Mock Up*);

"**NCC**" has the meaning given to it in Clause 51.19.3;

"**Net Loss**" or "**Net Gain**" means the net financial loss or the net financial gain, as the case may be, which it is reasonably considered would be suffered or made by the Tram Maintainer (as agreed reasonably by the Parties) as a result of a Client Change required pursuant to Clause 5.2;

"**Notice of Adjudication**" has the meaning given in paragraph 16 of Schedule 13 (*Dispute Resolution Procedure*);

"**Notification**" has the meaning given in paragraph 10.1 of Schedule 13 (*Dispute Resolution Procedure*);

"**Novation Agreement Escrow Letter**" means the escrow letter in substantially the form set out in part 3 of Schedule 1 (*Conditions Precedent*);

"**Object Code**" means any form of computer program which is suitable for direct execution by a machine only and unsuitable to be read and understood by a person;

"**OCIP Insurances**" means the insurances referred to in Clause 40.14, which shall be notified to the Tram Supplier from time to time;

TIE00899939_0025

"**Open Book Basis**" means the availability and disclosure (consistent with operation of Clause 24 (*Audit and Inspection*)) of a reasonable level of data and calculations used by the Tram Supplier to create and justify costings and financial analysis presented to the Client;

"**Operational Panel**" has the meaning given to it in paragraph 19.1 of Schedule 13 (*Dispute Resolution Procedure*);

"**Operations Performance Specification**" means the specification included within Schedule 2 (*Employer's Requirements*);

"**Operator**" means Transdev Edinburgh Tram Limited, a company incorporated in Scotland under registered number SC267598 and having its registered office at Level 1st Floor, City Point, Haymarket Terrace, Edinburgh EH1 2ET, appointed by **tie** as operator under the DPOFA or such successor operator of the Edinburgh Tram Network as may be appointed from time to time;

"**Operator Maintenance**" means the maintenance of the Edinburgh Tram Network to be carried out by the Operator (and its required frequency) shall be as follows:

(a) cleaning of all tramstops, access ways and car parks operated under the auspices of **tie** so as to ensure they are clean and free from all litter, dirt, debris, detritus, industrial and bodily fluids; such cleaning to be carried out not less than daily;

(b) emptying of all litter bins at tramstops or on the Trams daily or as regularly as necessary to prevent them from becoming full;

(c) promptly remove any observed or reported rubbish and debris at the tramstops or on Trams likely to create a risk of fire or other dangers;

(d) regularly remove any observed or reported litter on Trams throughout each day so as to maintain a reasonably clean travelling environment for passengers. This obligation shall also relate to the cleaning up of observed or reported fluids of any type on the Trams; and

(e) cleaning of the parts of the Depot for which the Operator is either the main user or which are shared and this shall include offices, Control Room, messing facilities, Operator locker rooms, car parking at the Depot and Depot entrances, so as to ensure such parts are clean and free from all litter, dirt, debris, detritus, industrial and bodily fluids; such cleaning to be carried out not less than daily or as may be otherwise agreed between **tie** and the Operator;

TIE00899939_0026

and shall also include the carrying out of the initial response to a failure of, damage to or other incident occurring on the System which is not specifically identified as the Operator's responsibility to resolve but actually or, in the Operator's reasonable opinion, potentially interrupts or delays the Transport Services;

"**Operator Maintenance Plan**" means the plan to be prepared by the Operator in relation to the performance of the Operator Maintenance and notified to the Parties from time to time;

"**Paint and Finishes**" means the paintwork, internal and external finishes of each Tram as set out in the Tram Requirements Specification;

"**Paint and Finish Defect**" means any defect in the Paint and Finishes;

"**Paint and Finish Warranty Period**" means a period of six (6) years from the Tram Maintenance Commencement Date;

"**Panels**" has the meaning given to it in paragraph 19 of Schedule 13 (*Dispute Resolution Procedure*);

"**Passenger Services**" means the public passenger Tram services to be provided by the Operator on the Edinburgh Tram Network;

"**Performance Bond**" means the performance bond in the form set out in part D of Schedule 10 (*Bonds and Collateral Warranty*);

"**Permitted Variations**" means a Client Change and/or a change proposed by the Tram Supplier which has been authorised to proceed in accordance with the provisions of this Agreement;

"**Persistent Breach Notice**" shall have the meaning given to it in Clause 56.1;

"**Persistent Failure**" means in respect of the same part or component of a Tram, where a failure or defect (other than a Fleet Tram Defect or normal wear of a wearable part or component) occurs on three or more occasions within any 12 month period and as such is required to be repaired, rebuilt or replaced under Warranty;

"**Phase 1a**" means Edinburgh Airport to Newhaven (inclusive), together with the Depot at Gogar and the spur at Roseburn Junction;

"**Phase 1b**" means Roseburn Junction to Granton Square (inclusive);

TIE00899939_0027

"**Point of Indexation**" shall be January each year to be applied annually as of 1st April each year;

"**Potential Relief Event**" shall have the meaning given to it in Clause 47.1;

"**Potential Relief Event Notice**" shall have the meaning given to it in Clause 47.1;

"**Pre-Operational Consents**" means any necessary approvals consents or authorisations relating to the design construction or performance of the Trams that are required either from HMRI, the Scottish Executive or another Approval Body prior to their operation in public service, such approvals to include but not be limited to those required under The Railways and Other Transport Systems (Approval of Works, Plant and Equipment) Regulations 1994, the Rail Vehicle Accessibility Regulations 1998 (as amended) and the relevant parts of the EMC Directive;

"**Pre-Works Development Services**" means the Design Development Services, the Mock-Up Production and obtaining of all Consents necessary prior to the Works Commencement Date;

"**Primary Tram Warranty Period**" means in respect of each Tram a period of 2 years commencing on the Tram Maintenance Commencement Date;

"**Prohibited Act**" means:

(a) offering, giving or agreeing to give to **tie,** the Scottish Executive, Transport Scotland, the Scottish Ministers, CEC or any **tie** Party or any other public body or any person owned or employed by, any of them any gift or consideration of any kind as an inducement or reward:

    (i) for doing or not doing (or for having done or not having done) any act in relation to the obtaining or performance of this Agreement; or

    (ii) for showing or not showing favour or disfavour to any person in relation to this Agreement;

(b) paying commission or agreeing to pay commission to any person in connection with the award of this Agreement;

(c) committing any offence:

    (i) under the Prevention of Corruption Acts 1889-1916 or in section 68(2) of the Local Government (Scotland) Act 1973;

TIE00899939_0028

(ii) under any Law creating offences in respect of fraudulent acts; or

(iii) at common law in respect of fraudulent acts in relation to this Agreement or any other relevant agreement with **tie**, any **tie** Party, the Scottish Executive, Transport Scotland, the Scottish Ministers, CEC or any other public body; and/or

(d) defrauding or attempting to defraud or conspiring to defraud the Scottish Executive, **tie**, any **tie** Party, CEC, Transport Scotland, the Scottish Ministers or any other public body;

Any references within this Agreement to any "Prohibited Act" shall include acts outwith the United Kingdom and the references within the definition "Prohibited Act" to UK legislation shall be deemed to be amended to refer to legislation in other jurisdictions outside of the United Kingdom;

"**Project**" means the project to procure the construction, operation and maintenance of a two line light rail network in Edinburgh;

"**Project IPR**" means all Intellectual Property Rights created in the performance of the Tram Works relating to aesthetic and ergonomic detailed design and which are specific in nature to the performance of the Tram Works;

"**Project Quality Assurance Programme**" means the quality assurance programme in respect of the manufacture, testing and delivery of the Trams set out in part 4 to Schedule 4 (*Programme*) to this Agreement as the same may be amended from time to time in accordance with this Agreement;

"**Project Safety and Certification Committee**" **or** "**PSCC**" shall include representatives from **tie**, Transport Edinburgh Limited, CEC in its capacity as roads authority, the Infraco, the Operator, the Tram Supplier and the Tram Maintainer;

"**Project Vision**" means the project vision referred to in recital G of this Agreement;

"**Protestor Action**" means any action occurring in Edinburgh or whilst undertaking the delivery of trams within Scotland, directed against **tie** or a **tie** Party or the Edinburgh Tram Network which materially affects the performance of the Tram Supplier's obligations under this Agreement and has not arisen as a result of or been caused by the Tram Supplier's breach of its obligations under this Agreement or otherwise by any action or omission of the Tram Supplier unrelated to the Edinburgh Tram Network;

TIE00899939_0029

"**Qualifying Change in Law**" means

(a) a Discriminatory Change in Law; and/or

(b) a Specific Change in Law;

"**Railway Safety Publication 2**" means the railway safety publication paper providing guidance on trams and published by the Office of Rail Regulation in 2006 as may be amended from time to time;

"**Rectification Period**" shall have the meaning given to it in Clause 36.2.2.3;

"**Rectification Plan**" shall have the meaning given to it in Clause 36.2.2.3;

"**Referral**" has the meaning given in paragraph 27 of Schedule 13 (*Dispute Resolution Procedure*);

"**Referring Party**" has the meaning given in paragraph 16 of Schedule 13 (*Dispute Resolution Procedure*);

"**Related Contracts**" has the meaning given to it in paragraph 55 of Schedule 13 (*Dispute Resolution Procedure*);

"**Related Dispute**" has the meaning given in paragraph 55 of Schedule 13 (*Dispute Resolution Procedure*);

"**Relevant Authority**" means any court with the relevant jurisdiction and any local, national or supra-national agency, inspectorate, minister, ministry, official or public or statutory person of the government of the United Kingdom or of the European Union;

"**Reliability**" means in respect of a Tram that it has operated for two consecutive Reporting Periods in passenger carrying service without being a Tram Maintainer Late Tram and that during the same two Reporting Periods it has travelled a distance in excess of 10,000 kilometres;

"**Reliability Bond**" means the bond to be provided on behalf of the Tram Supplier by a bond provider of standing acceptable to the Client (acting reasonably) in a form substantially similar to that set out in Schedule 10 (*Bonds and Collateral Warranty*);

"**Relief Event**" means one or more of the following events:

(a) fire, explosion, lightning, storm, tempest, flood, ionising radiation (to the extent it

TIE00899939_0030

does not constitute a Force Majeure Event), earthquakes, riot and civil commotion; or

(b) any:

(i) official or unofficial strike; or

(ii) lockout; or

(iii) go-slow; or

(iv) other industrial dispute generally affecting the tram and/or tram manufacturing industry or a significant sector of it; or

(v) failure of the Operator to make available drivers or other relevant staff as necessary;

save where such events relate to the Tram Supplier's workforce or the workforce of any Sub-contractor to the Tram Supplier, in which case they shall not qualify as a Relief Event; or

(c) any breach by the Client of its obligations under this Agreement which has an adverse effect (provided that it is not de-minimis) on the ability of the Tram Supplier to perform its obligations under this Agreement, or

(d) an act of terrorism; or,

(e) the occurrence of a Force Majeure Event

"**Repeated Failure Notice**" shall have the meaning given to it in Clause 32.1;

"**Repeated Failure Remedy Plan**" shall have the meaning given to it in Clause 32.2;

"**Reporting Period**" has the meaning ascribed to it in the Tram Maintenance Agreement;

"**Reporting Period End Date**" means the dates set out in Schedule 21 (*Reporting Period End Dates*);

"**Representatives**" means the Client's Representative and the Tram Supplier's Representative;

"**Request for Information**" shall have the meaning set out in FOISA and shall include any apparent request for information under FOISA, the Environmental Information Regulations or the Code;

TIE00899939_0031

"**Required Insurances**" means the insurances complying with the insurance requirements set out in part 1 of Schedule 11 (*Required Insurances*);

"**Required Standards**" means:

(a) it has received all such Pre-Operational Consents as are required for use in Passenger Services; and

(b) it has been so designed, built, manufactured, installed, calibrated, adapted and commissioned and otherwise engineered as to be compatible with all relevant operational interfaces (as those interfaces may from time to time be notified to the Tram Supplier);

(c) and so as to ensure that the Tram Requirements Specification is complied with;

"**Responding Party**" has the meaning given in paragraph 17 of Schedule 13 (Dispute Resolution Procedure);

"**Routine Tests**" means any of the: Site Commissioning Routine Tests, System Integration Routine Tests, Tram Commissioning Routine Tests, or the Factory Acceptance Routine Tests;

"**RPIX**" means the general index of retail prices for all items excluding mortgage interest payments (Office of National Statistics: Series Identifier: CHMK) as published or any replacement thereof or, in the event such index ceases to exist, such other similar index as the Parties shall agree from time to time (or, if the Parties cannot so agree, as determined under the Dispute Resolution Procedure on the referral of either Party) provided that, if the basis of computation of such index shall have changed between the two relevant months, any official reconciliation between the two bases of computation published by a United Kingdom government department shall be binding on the Parties and, in the absence of such official reconciliation, such adjustment shall be made to the figure of such index for the second of those months to make it correspond as nearly as possible to the method of computation for the first of those months and such adjusted figure shall be considered for the purpose of this Agreement to the exclusion of the actual published figure;

"**SDS Provider**" means Parsons Brinckerhoff Limited, a company registered in England and Wales with registered number 02554514 whose registered office is at Amber Court, William Armstrong Drive, Newcastle Business Park, Newcastle upon Tyne, NE4 7YQ which expression shall include its permitted assignees or such other system design services provider appointed by **tie** or the Client and notified to the Tram Supplier by notice in writing from time to time in relation to the Edinburgh Tram Network;

TIE00899939_0032

"**Security Interests**" means any mortgage, pledge, lien, hypothecation, security interest or other charge or encumbrance or any other agreement or arrangement having substantially the same economic effect and includes any security as defined in section 248(b) of the Insolvency Act 1986;

"**Service Commencement Date**" means the first date of commencement of Passenger Services;

"**Site Commissioning Routine Tests**" means the commissioning acceptance tests to be carried out on the System on each Tram as set out in section 23 of Schedule 2 (*Employer's Requirements*);

"**Site Commissioning Tests**" means together the Site Commissioning Routine Tests and the Site Commissioning Type Tests;

"**Site Commissioning Type Tests**" means the commissioning acceptance tests to be carried out on the System on a specified number of Trams as set out in section 23 of the Employer's Requirements;

"**Software**" means the executable object code version of software relating to equipment installed on the Trams, which is supplied in machine readable form and already loaded upon the relevant piece of equipment or computer system to which it relates, including for the avoidance of doubt all Software embedded in a hardware device which is installed on the Trams;

"**Software Intellectual Property Rights**" means any Intellectual Property Right which exists in the Software (including the Source Code);

"**Source Code**" means the source code version of Software, which is supplied in a form capable of being read and interpreted by humans, together with related interpretive information;

"**Spare Parts**" means such components, parts, consumables, equipment and furnishings as may reasonably be required from time to time to maintain, repair or replace any part of any Tram or to keep it compliant with Required Standards and Law for the duration of its operational life;

"**Spare Parts Period**" means a period of 30 years from the Tram Maintenance Commencement Date;

"**Special Tools**" means the special tools required to carry out maintenance of the Trams, listed in part 5 of Schedule 2 (*Employer's Requirements*) as the same may be varied from time to time by written agreement of the parties (such agreement not to be unreasonably withheld or delayed);

"**Specific Change in Law**" means any Change in Law which specifically applies to the provision of works the same as or similar to the Tram Works (but not to the provision of other works);

"**Sub-Contractor**" means any sub-contractor, sub-consultant, supplier, specialist and/or other party appointed in accordance with Clause 69 (*Assignation, Changes in Legal Status, Changes in Control and Sub-Contracting*) or otherwise approved by the Client, and Sub-Contract is to be interpreted accordingly;

"**Sub-Contractor Direct Agreement**" means an agreement in a form substantially similar to that set out in Schedule 18 (*Sub-Contractor Direct Agreement*);

"**System**" the tram system to be constructed in accordance with the Tram Legislation made in respect of the Edinburgh Tram Network together with associated works and facilities and including all civil engineering and track works, tram infrastructure, plant, machinery and equipment installed or used for such tram system;

"**Systems Acceptance Tests**" means the acceptance tests to be carried out on the System as set out in section 23 of the Employer's Requirements;

"**System Availability Targets**" means the targets set out in section 15 of the Employer's Requirements;

"**System Design Services Agreement**" (or "**SDS Agreement**") means the agreement dated 19 September 2005 made between **tie** and the SDS Provider relating to the provision of system design services in relation to the Project;

"**System Integration Routine Tests**" means the commissioning acceptance tests to be carried out on the System on each Tram as set out in section 23 of the Employer's Requirements;

"**System Integration Tests**" means together the System Integration Routine Tests and the System Integration Type Tests;

TIE00899939_0034

"**System Integration Type Tests**" means the commissioning acceptance tests to be carried out on the System on a specified number of Trams as set out in section 23 of the Employer's Requirements;

"**Tax**" means any kind of tax (including for the avoidance of doubt insurance premium tax), duty, levy, imposition, assessment or other charge (other than VAT) whether or not similar to any in force at the date of this Agreement and whether imposed by a local, governmental or other Relevant Authority in the United Kingdom or elsewhere;

"**Term**" means the period from (and including) the Effective Date until (and including) the earlier of the Expiry Date or the date of termination of this Agreement;

"**Termination Date**" means any date of early termination of this Agreement in accordance with its terms;

"**Technical Library**" has the meaning given to it in Clause 51.20.1;

"**Test Certificates**" means the certificates set out in parts 1 to 7 of Schedule 12 (*Certificates*);

"**Testing Failure**" means a failure to meet the requirements of any of the Tram Tests;

"**Test Plan**" means the plan for testing and commissioning of the Trams to be agreed with the Client in accordance with in section 23 of the Employer's Requirements;

"**Test Specifications**" means the specifications for testing and commissioning of the Trams as set out in section 23 of the Employer's Requirements and as varied from time to time in accordance with this Agreement;

"**Test Track**" means the track to be built by Infraco for the initial purposes of the testing and commissioning of the Trams;

"**Third Party Software**" means programmes, the Intellectual Property Rights in which are owned by a third party and used by the Tram Supplier to perform its obligations under this Agreement;

"**Third Party Software Licence**" means a licence to use the Third Party Software;

"**tie**" means **tie** limited, a company registered in Scotland under company number SC230949 and having its registered office at City Chambers, High Street, Edinburgh, EH1 1YJ, Midlothian, which shall include its successors in title, permitted assignees and transferees;

TIE00899939_0035

"**tie and CEC Policies**" means the policies included in Schedule 20 (**tie** *and CEC Policies*);

"**tie Customer Satisfaction Survey**" has the meaning given to it in Clause 50.3;

"**tie's Drug and Alcohol Policy**" means the policy set out in Schedule 20 (**tie** *and CEC Policies)*;

"**tie Party**" means any advisers appointed by **tie** and/or any of **tie's**, agents, employees, contractors and Sub-contractors of any tier and its or their directors, officers, employees (but excluding the Infraco, any Infraco Party, the Tram Supplier and any Tram Supplier Party) and "**tie Parties**" shall be construed accordingly;

"**tie's** Representative" means the person or persons appointed by **tie** from time to time and notified to the Tram Supplier;

"**Timetable**" means the timetable which is developed by the Operator under the terms of the DPOFA Agreement and section 2 of the Tram Employer's Requirements, as may be notified to the Tram Supplier by the Client from time to time;

"**Training Programme**" means the training programme for the training of Operator's driver instructors and the Tram maintenance staff set out at part 3 to Schedule 2 (*Programme*);

"**Training Schedule**" means part 3 of Schedule 2 (*Employer's Requirements*);

"**Tram**" means any electric tram unit to be designed, manufactured, engineered, fitted out, equipped, installed and delivered by the Tram Supplier in accordance with the terms of this Agreement including for the avoidance of doubt, Additional Trams;

"**Tram Commissioning Certificate**" means a certificate issued in accordance with Clause 7.2.1.10;

"**Tram Commissioning Requirements**" shall have the meaning given to it in Clause 31.8;

"**Tram Commissioning Routine Tests**" means together the Site Commissioning Routine Tests and the System Integration Routine Tests;

"**Tram Commissioning Tests**" means together the Tram Commissioning Routine Tests and the Tram Commissioning Type Tests;

"**Tram Commissioning Type Tests**" shall have the meaning given to it in Clause 31.9;

TIE00899939_0036

"**Tram Commissioning Type Test Certificate**" means the certificate issued in accordance with Clause 31.9;

"**Tram Defect**" means in respect of any Tram supplied by the Tram Supplier under this Agreement that it:

(a) does not comply with the Tram Employer's Requirements;

(b) does not satisfy the Required Standards as at the date of the issue of the Tram Commissioning Type Test Certificate; or

(c) is not otherwise in accordance with any other provision of this Agreement;

"**Tram Delivery Requirements**" shall have the meaning given to it in Clause 30.2;

"**Tram Delivery Tests**" means the tests to be conducted on the Trams on arrival at the Depot, in accordance with Clause 30 (*Tram Delivery Tests and Certification*) and in section 23 of the Employer's Requirements;

"**Tram Documentation**" means the documentation, specifications, instructions, catalogues, spare parts list, training and maintenance manuals and log books and Software listed in part 2 of Schedule 4 (*Programme*);

"**Tram Documentation Delivery Programme**" means the delivery and approval programme in respect of the Tram Documentation set out in part 2 of Schedule 4 (*Programme*);

"**Tram Employer's Requirements**" means the subset of the Employer's Requirements listed in part 1 of Schedule 2 (*Employer's Requirements*) as relating to the Tram Maintainer and Tram Supplier;

"**Tram Inspector**" means the person specified as such in the Tram Inspector Agreement or such other person as the Client may notify the Tram Supplier in writing from time to time;

"**Tram Inspector Agreement**" means an agreement between the Tram Inspector, **tie**, and the Infraco for the inspection and certification of Trams dated on or about the date of this Agreement;

"**Tram Interface Specification**" means paragraph 1.2.5 of Schedule 23 (*Tram Supplier's Proposal*);

TIE00899939_003

"**Tram Legislation**" means the Edinburgh Tram (Line One) Act 2006 and the Edinburgh Tram (Line Two) Act 2006 which received Royal Assent on 8 May 2006 and 27 April 2006 respectively and which confer on CEC all requisite authorities and statutory powers to procure construction, operation and maintenance of the Edinburgh Tram Network;

"**Tram Maintainer**" means the party appointed to carry out the Tram Maintenance Services in accordance with the Tram Maintenance Agreement or such other person as may enter into a contract with the Client on similar terms from time to time;

"**Tram Maintainer Late Tram**" shall have the meaning set out in the Tram Maintenance Agreement;

"**Tram Maintenance Agreement**" means the maintenance agreement to be entered into on or about the date of this Agreement between the Tram Maintainer and **tie** for the ongoing maintenance of the Trams which is to be novated to the Infraco;

"**Tram Maintenance Commencement Date**" means the date on which the maintenance obligations commence under the Tram Maintenance Agreement;

"**Tram Maintenance Plan**" means the plan prepared by the Tram Supplier in respect of the maintenance of the Trams as updated from time to time;

"**Tram Maintenance Services**" means the ongoing maintenance of the Trams, supply of consumable spares for the Trams, the provision of any associated services and other obligations incumbent on the Tram Maintainer as described in the Tram Maintenance Agreement;

"**Tram Maintenance Specification**" means the specification for the maintenance services to be provided by the Tram Maintainer as set out in part 40 of the Tram Employer's Requirements;

"**Tram Manufacturing and Delivery Programme**" means the programme for the design, manufacture, delivery, testing and commissioning of the Trams set out in part 1 of Schedule 4 (*Programme*) as the same may be amended from time to time in accordance with the terms of this Agreement;

"**Tram Price**" means the price of a Tram being an amount of one million nine hundred and fifty seven thousand and forty one pounds sterling (£1,957,041);

TIE00899939_0038

"**Tram Rejection Notice**" means a tram rejection notice in the form set out in part 5 of Schedule 12 (*Certificates*);

"**Tram Related Equipment**" means the Tram Documentation, Spare Parts and Special Tools;

"**Tram Requirements Specification**" means the specification for the Trams set out in the Tram Employer's Requirements;

"**Tram Supplier Certificates of Insurance**" means the certificates of insurance of the Tram Supplier in relation to the Required Insurances set out in part 2 of Schedule 11 (*Required Insurances*);

"**Tram Supplier Default**" shall have the meaning given to it in Clause 55.1;

"**Tram Supplier IPR**" means:

(a) all Intellectual Property Rights (including Intellectual Property Rights in relation to the Tram Supplier Software) which the Tram Supplier can demonstrate by documentary evidence were already existing and owned by, or licensed to, the Tram Supplier prior to the Effective Date including, without limitation, any asset management system and/or works programming system operated by the Tram Supplier which is not comprised within the Project IPR; and

(b) any modifications or developments of any of the Intellectual Property Rights referred to in paragraph (a) above which are generic in nature;

"**Tram Supplier Party**" means any contractors, agents, sub-contractors, professional advisors or consultants engaged by the Tram Supplier to perform, facilitate or assist with the performance of any of the Tram Works and any of its or their sub-contractors of any tier and its or their directors, officers, employees and workmen in relation to the Project and "**Tram Supplier Parties**" shall be construed accordingly;

"**Tram Supplier's Proposals**" means the proposals set out in Schedule 23 (Tram Supplier's Proposals) and which in addition shall include all features on the Tram mock-up produced and approved pursuant to Clause 23 (*Mock-Up*);

"**Tram Supplier's Representative**" means the Tram Supplier's Project Manager or such other person as may from time to time be notified in writing by the Tram Supplier to the Client;

"**Tram Supplier Safety Management System**" has the meaning given to it in Clause 10.8.1.2;

TIE00899939_0039

"**Tram Supplier Software**" means programs, the Intellectual Property Rights in which are:

(a) owned by the Tram Supplier; and

(b) used by the Tram Supplier to carry out its obligations under this Agreement;

"**Tram Supply Advance Works Agreement**" means the agreement entered into between **tie** and the Tram Supplier on 18th December 2007;

"**Tram Supply Collateral Warranty**" means a collateral warranty between **tie** and the Tram Supplier substantially in the form set out in part 3 of Schedule 1 (*Conditions Precedent*);

"**Tram Supply Novation Agreement**" means a novation agreement between a New Party, **tie** and the Tram Supplier substantially in the form set out in part 2 of Schedule 1 (*Conditions Precedent*);

"**Tram Supply Period**" means the period from the Effective Date until the expiry of the last Extended Tram Warranty Period;

"**Tram Tests**" means any of the Factory Acceptance Tests, Delivery Acceptance Tests, Site Commissioning Tests and System Integration Tests;

"**Tram Works**" means the Tram Supplier's obligations pursuant to this Agreement including the Pre Works Development Services and the supply of the Depot Equipment;

"**Transport Edinburgh Limited**" or "**TEL**" means Transport Edinburgh Limited a company incorporated under the Companies Act with registered number SC269639 and having its registered office at 55 Annandale Street, Edinburgh, EH7 4AZ;

"**Transport Scotland**" means an agency within the Scottish Executive Enterprise, Transport and Lifelong Learning Department which was established in January 2006 and having its principal office at Buchanan House, 58 Port Dundas Road, Glasgow, H4 0HF;

"**Transport Services**" means the public passenger transport services to be provided by the Operator on the Edinburgh Tram Network (or any part thereof) set out in the Operations and Performance Specification;

"**Type Test**" means any of the Factory Acceptance Type Test, Site Commissioning Type Test, System Integration Type Test, and Tram Commissioning Type Test;

TIE00899939_0040

"**Utilities**" means BT, Easynet, NTL, Scottish Water, Scottish Gas Networks, Thus and their successors, permitted assignees and transferees and "Utility" shall be construed accordingly;

"**VAT**" means Value Added Tax;

"**Warranty**" shall have the meaning given to it in Clause 36.1;

"**Warranty Period**" means the Primary Tram Warranty Period, Paint and Finish Warranty Period, Fleet Defect Warranty Period and/or Extended Tram Warranty Period;

"**Works Commencement Date**" means the date on which the Tram Supplier has been notified by the Client that all of the Commencement Conditions Precedent and Works Conditions Precedent (if any) have been satisfied or waived; and

"**Works Conditions Precedent**" shall mean any Commencement Conditions Precedent that the Client has notified the Tram Supplier may be treated as Works Conditions Precedent.

1.2 In this Agreement, except where the context otherwise requires:

1.2.1 words importing gender include masculine, feminine and neuter;

1.2.2 the singular includes the plural and vice versa;

1.2.3 a reference to any part, Clause, sub-Clause, Schedule or appendix is, except where it is expressly stated to the contrary, a reference to such part, Clause or sub-Clause of or Schedule or appendix to this Agreement;

1.2.4 a reference in any Schedule or appendix to any part, paragraph or sub- paragraph is, except where it is expressly stated to the contrary, a reference to such part, paragraph or sub-paragraph of that Schedule or appendix (as the case may be);

1.2.5 any reference to this Agreement or to any other document shall include any variation, amendment, or supplement to this Agreement or such other document expressly permitted under the terms of this Agreement;

1.2.6 any reference to any enactment, draft enactment, order, regulation or other similar instrument (including any EU instrument) (whether specifically named or not) shall be construed as a reference to the enactment, order, regulation or instrument as amended, replaced, consolidated or re-enacted and shall include any orders, regulations, legally binding codes of practice or subordinate legislation (within the meaning of section 21(1) of the Interpretation Act 1978) made thereunder;

TIE00899939_0041

1.2.7 references to any items being "in the agreed form" means such items have been initialled by or on behalf of each of the Parties for the purpose of identification;

1.2.8 a reference to a person includes individuals, firms, partnerships, bodies corporate, joint ventures, government departments and any organisation capable of suing or being sued and references to any of the same include the others and their successors and assignees and transferees;

1.2.9 headings and the contents list are for convenience of reference only and do not affect the interpretation of this Agreement;

1.2.10 the ejusdem generis rule does not apply and the meaning of general words is not to be restricted by any particular examples preceding or following those general words;

1.2.11 a reference to a time of day is a reference to the time in Edinburgh;

1.2.12 subject to the restrictions imposed by this Agreement on sub-contracting, an obligation to do something includes an obligation to procure it to be done;

1.2.13 an obligation not to do something includes an obligation not to wilfully allow it to be done; and

1.2.14 the word "including" means "including without limitation".

1.3 This Agreement shall be interpreted and construed as a whole provided that in the event of any inconsistency or conflict between the main body of this Agreement and/or the Schedules and/or the appendices, then:

1.3.1 the main body shall prevail to the extent of any such conflict or inconsistency over the Schedules and appendices; and

1.3.2 the Schedules shall prevail to the extent of any such conflict or inconsistency between the Schedules and appendices.

2. CONDITIONS PRECEDENT

2.1 The Client may by notice in writing to the Tram Supplier waive satisfaction of any or all of the Conditions Precedent.

2.2 The Client may by notice in writing to the Tram Supplier confirm that any of the Commencement Conditions Precedent can be treated as Works Conditions Precedent.

TIE00899939_0042

2.3 On the date that each of the Commencement Conditions Precedent (with the exception of any Commencement Conditions Precedent that have been expressly waived by the Client in writing) have in the Client's opinion (acting reasonably) been satisfied, the Client shall notify the Tram Supplier of the same.

2.4 On the date that each of the Works Conditions Precedent (if any) (with the exception of any Works Conditions Precedent that have been expressly waived by the Client in writing) have in the Client's opinion (acting reasonably) been satisfied, the Client shall notify the Tram Supplier of the same.

2.5 The Tram Supplier shall use its reasonable endeavours to satisfy or procure the satisfaction of the Conditions Precedent as soon as reasonably possible after the Effective Date.

3. EFFECTIVE DATE, COMMENCEMENT DATE AND WORKS COMMENCEMENT DATE

3.1 With the exception of:

3.1.1 the provisions of Clauses 1 (*Definitions and Interpretation*), 2 (*Conditions Precedent*), 3 (*Effective Date, Commencement Date and Works Commencement Date*), 4 (*Term of this Agreement*), 40 (*Required Insurances*), 41 (*Liability, Indemnities, Retention and Liquidated Damages*), 51 (*Copyright and Intellectual Property*), 52 (*Confidential Information*), 64 (*Dispute Resolution*), 65 (*Derogations*), 66 (*Variations to be in Writing*), 67 (*Waiver and Cumulative Remedies*), 68 (*Notices*), 69 (*Assignation, Changes in Legal Status, Changes in Control and Sub-Contracting*), 70 (*Conflict of Interest*), 71 (*Security Interests*), 72 (*Data Protection*), 73 (*Entire Agreement*), 74 (*Consent and Approval*), 75 (*Discrimination*), 76 (*Further Assurance*), 77 (*Applicable Law*), 78 (*No Partnership or Agency*), 79 (*Invalid Terms*) and 80 (*Third Party Rights*) of this Agreement, which shall take effect on the Effective Date; and

3.1.2 the provisions of Clauses 7 (*General Obligations*) (but in respect of the Pre- Works Development Services only), Clause 11 (*General Warranties*), 12 (*Consents*) (with the exception of Clause 12.7 which shall already have taken effect), 13 (*Client's Representative*), 14 (*Tram Supplier's Representative*), 15 (*Design Development*), 18 (*Personnel*), 19 (*Approvals and Consents*), 20 (*Changes*), 23 (*Mock Up*), 24 (*Audit and Inspection*), 25 (*Quality Assurance*), 38 (*Price and Payment*), 39 (*VAT*), 43 (*Mitigation*), 45 (*Tram Supplier Delays*), 55 (*Tram Supplier Default Termination*) to 63 (*Effect of Termination or Expiry*) of this Agreement, which shall take effect on the Commencement Date,

TIE00899939_0043

the obligations of the parties under this Agreement shall be conditional upon the occurrence of the Works Commencement Date.

3.2 This Agreement shall terminate automatically on a date 12 months after the Effective Date or, if later, 6 months after the execution of the Infraco Contract (or on such later date as may be agreed in writing between the Parties) if the Commencement Date has not arisen on or before such date, in which event:

3.2.1 all provisions of this Agreement (other than the provisions of Clauses 1 (*Definitions and Interpretation*), 2 (*Conditions Precedent*), 3 (*Effective Date, Commencement Date and Works Commencement Date*), 4 (*Term of the Agreement*), 41 (*Liability, Indemnities, Retention and Liquidated Damages*), 51 (*Copyright and Intellectual Property*), 52 (*Confidential Information*), 64 (*Dispute Resolution*), 66 (*Variations to be in Writing*), 68 (*Notices*), 73 (*Entire Agreement*), 77 (*Applicable Law*), 78 (*No Partnership or Agency*), 79 (*Invalid Terms*), 80 (*Third Party Rights*)) shall cease to have effect; and

3.2.2 such termination shall be without prejudice to any accrued rights or obligations as at that date.

4. TERM OF THE AGREEMENT

4.1 Subject to Clause 3 (*Effective Date, Commencement Date and Works Commencement Date*) and 4.2, this Agreement shall commence on the Effective Date and shall continue unless terminated earlier in accordance with its terms, until the expiry of the Tram Supply Period ("**Expiry Date**").

4.2 Unless terminated earlier in accordance with its terms, this Agreement shall continue in full force and effect until the expiry of a period of 30 years from the Tram Maintenance Commencement Date only in respect of the rights and obligations of the Tram Supplier and the Client pursuant to Clauses 34.3, 34.4 and 34.6 and all other provisions of this Agreement necessary to give effect to such Clauses.

4.3 Clause 62.1 shall not apply on the expiry of the Tram Supply Period or the Spare Parts Period.

5. NOVATION

5.1 Unless waived by the Client in accordance with Clause 2.1, it is one of the conditions precedent to the occurrence of the Works Commencement Date that the Tram Supplier shall, if required by **tie**, enter into and execute:

TIE00899939_0044

5.1.1 a Tram Supply Novation Agreement in the form set out in part 3 of Schedule 1 (*Conditions Precedent*);

5.1.2 a Tram Supply Collateral Warranty in the form set out in part 3 of Schedule 1 (*Conditions Precedent)*; and

5.1.3 a Novation Agreement Escrow Letter in the form set out in part 3 of Schedule 1 (*Conditions Precedent)*;

5.2 Subject to Clause 5.3, prior to the Tram Supply Novation Agreement coming into effect pursuant to the terms of the Novation Agreement Escrow Letter, the provisions of this Agreement and any associated documentation are subject to any amendment reasonably required by **tie** upon obtaining the Tram Supplier's written agreement, such agreement not to be unreasonably withheld, to reflect the terms of any agreement reached by **tie** with any new party to this Agreement

5.3 Any amendment to this Agreement required pursuant to Clause 5.2 shall be made on a No Net Gain No Net Loss Basis.

6. COMMENCEMENT OF TRAM WORKS

6.1 The Tram Supplier shall on the Works Commencement Date immediately commence manufacturing and supplying the Trams in accordance with the terms of this Agreement.

7. GENERAL OBLIGATIONS

7.1 Notwithstanding the specific responsibilities set out in Clause 7.2, the Tram Supplier warrants to the Client that in carrying out and completing the Tram Works it has exercised and shall continue to exercise a reasonable level of professional skill, care and diligence to be expected of a properly qualified and competent professional contractor experienced in carrying out works and services of a similar nature to the Tram Works in connection with projects of a similar scope and complexity. The Tram Supplier acknowledges that the Client will rely upon the skill, care and diligence of the Tram Supplier in connection with all matters for which the Tram Supplier is responsible under this Agreement.

7.2 The Tram Supplier shall:

7.2.1 carry out the Tram Works and design, manufacture, engineer, supply, test, commission, deliver and provide 27 Trams, Depot Equipment and, if required, any Additional Trams, and otherwise perform its obligations under this Agreement:

TIE00899939_0045

7.2.1.1 so as to ensure compliance with the Tram Employer's Requirements;

7.2.1.2 so as to ensure compliance with the Tram Supplier's Proposals;

7.2.1.3 in accordance with part 1 of Schedule 4 (*Programme*);

7.2.1.4 in accordance with the Project Quality Assurance Programme;

7.2.1.5 so as to ensure that all parts, components, systems, devices, equipment, software and mechanisms incorporated in the Trams are fit for purpose to comply with the Tram Employer's Requirements, compatible and interoperable with each other;

7.2.1.6 using Good Industry Practice;

7.2.1.7 in compliance with all applicable Laws and Consents;

7.2.1.8 in a manner which does not infringe the Intellectual Property Rights of any third party;

7.2.1.9 in a manner which does not infringe the instructions issued to it by the Client or its authorised representatives or assignees (provided that the identity of such persons is notified to the Tram Supplier in advance in writing) and/or the Tram Inspector in accordance with the terms of this Agreement;

7.2.1.10 so as to ensure that in relation to each Tram, that it meets the Required Standards and each Tram shall (without prejudice to the Client's other rights and remedies under this Agreement) be deemed to have achieved the Required Standards upon receipt of a certificate ("**Tram Commissioning Certificate**"); and

7.2.1.11 so as to ensure that it obtains all Pre-Operational Consents;

7.2.1.12 in accordance with the Code of Construction Practice, so far as it is applicable;

7.2.1.13 in accordance with the Code of Maintenance Practice, so far as it is applicable;

7.2.1.14 in accordance with relevant environmental regulations and requirements in Scotland; and

TIE00899939_0046

7.2.1.15 in accordance with **tie** and CEC Policies;

7.2.1.16 so as to ensure compliance with the Tram Legislation;

7.2.1.17 so as to assist **tie** in relation to providing information that best value (pursuant to the Local Government (Scotland) Act 1973 as amended by the Local Government in Scotland Act 2003) has been secured in respect of the carrying out of the Tram Works;

7.2.1.18 in such manner as not wilfully to detract from the image and reputation of **tie**, Transport Edinburgh Limited, CEC, the Scottish Ministers, Transport Scotland, the Edinburgh Tram Network and the Client;

7.2.1.19 so as to ensure that sustainability is considered and discussed with the Client in relation to energy consumption and the supply of materials from sustainable sources in respect of the manufacture and operation of the Trams;

7.2.1.20 in a manner that is not likely to be injurious to persons or property; and

7.2.1.21 using the Key Personnel.

7.2.2 provide such support, assistance and co-operation to the Client Parties in relation to the Project as the Client may reasonably request from time to time;

7.2.3 keep the Client's Representative and the Tram Inspector fully informed updated and apprised of all relevant developments in relation to the development, manufacturing, supply and testing of the Trams in a timely manner;

7.2.4 maintain the Trams until the Tram Maintenance Commencement Date so that they at all times comply with the Tram Employer's Requirements;

7.2.5 handover maintenance of the Trams to the Tram Maintainer in accordance with Clause 42 (*Maintenance Handover*); and

7.2.6 comply with the Construction (Design and Management) Regulations 2007 in so far as they are applicable to the discharge of the Tram Supplier's obligations under this Agreement, comply with the health and safety plan, the instructions of the Client's CDM coordinator in its activities on site and provide relevant information required by the Client's CDM coordinator within 20 Business Days of such request.

7.3 The Tram Supplier undertakes that the Tram Supplier's Proposals and Trams, Tram Related Equipment and any materials supplied shall meet the Tram Employer's Requirements.

7.4 The Tram Supplier shall, unless agreed otherwise by the Client in writing, assemble the Trams in Zaragoza, Beasain and Irun ("**Factory**"). The Client shall not unreasonably withhold its consent to a request from the Tram Supplier that it assembles the Trams in a location other than the Factory if the reason for such request is the occurrence of a serious event at the premises in the Factory which prevents the Trams from being assembled in the Factory.

7.5 The Tram Supplier shall promptly provide such information, assistance and expertise as any of the Client Parties may reasonably request to meet their respective obligations in respect of the Project.

7.6 The commencement or continuance of any proceedings pursuant to the Dispute Resolution Procedure shall not:

7.6.1 relieve the Tram Supplier from performing its obligations; or

7.6.2 suspend in whole or in part the Tram Supplier's obligations, under or in relation to this Agreement.

7.7 The Tram Supplier shall at all times keep itself fully informed about current professional and technical standards and about all matters relating to, or which might have a bearing on, the carrying out of the Tram Works.

7.8 The Tram Supplier's duties and obligations under or pursuant to this Agreement will not be released, diminished or in any other way affected by any independent inquiry into any matter which may be made or carried out by the Client or **tie** or by any firm, company or party on the Client or **tie's** behalf nor by any action or omission of any such firm, company or party whether or not such action or omission might give rise to any independent liability of such firm, company or party to the Client or **tie**.

7.9 The Tram Supplier is deemed to have satisfied itself that it fully understands the scope and extent of the requirements in respect of its obligations pursuant to this Agreement, and that it has sufficient information (including the Background Information) or will at the relevant time have sufficient information, to enable it to carry out its obligations pursuant to this Agreement. In connection with such information the Tram Supplier is deemed to have satisfied itself that it has or will have satisfied itself that it is accurate and complete before placing reliance upon it.

TIE00899939_0048

Liaison

7.10 The Tram Supplier shall (and shall procure that the Tram Supplier Parties) liaise with the Client, any Client Party, **tie**, any **tie** Party, the Operator and any other parties as may reasonably be required by the Client or **tie** to facilitate the production, by such persons, of any information required from them, in order that the carrying out of the Tram Works and its other obligations under this Agreement can be progressed according to the Tram Manufacturing and Delivery Programme. The Tram Supplier shall (and shall procure that the Tram Supplier Parties) liaise with the Client, any Client Party **tie**, any **tie** Party, the Operator, and any other parties as may be reasonably required by the Client or **tie** as often as is necessary in order to ensure that the Tram Works are carried out properly and in accordance with the terms of this Agreement.

7.11 The Tram Supplier shall (and shall procure that the Tram Supplier Parties shall) liaise with the Client, any Client Party, **tie**, any **tie** Party, the Operator and any other parties as may reasonably be required by the Client or **tie** and shall provide such information as may be reasonably requested by such persons in relation to the design, construction, testing, commissioning, integration, operation and maintenance of the Edinburgh Tram Network to the extent that such information is available to the Tram Supplier, and does not constitute Tram Supplier IPR.

Prohibited Materials

7.12 The Tram Supplier undertakes and warrants to the Client that at the date of contract award it has not specified for use and shall not specify for use and shall ensure that there shall not be used in relation to the Trams, any materials which at the time of specification or use (as the case may be):

7.12.1 are known to be deleterious in the particular circumstances in which they are specified to be used (either to health and safety or to the durability of the Trams); or

7.12.2 contravene any relevant standard or code of practice issued from time to time by the BSI Group or under a European directive relating to standards; or

7.12.3 do not accord with the guidelines contained in the edition of the publication "Good Practice in Selection of Construction Materials" (Ove Arup & Partners) current at the date of specification or use; or

7.12.4 contravene Good Industry Practice.

TIE00899939_0049

7.13 The Tram Supplier confirms that it has studied in detail the Employer's Requirements and each document comprised therein and has satisfied itself that no discrepancies or errors exist within the Employer's Requirements or between the Employer's Requirements and the Tram Supplier's Proposals, Trams and/or Tram Documentation and in relation to the Background Information in relation to this Agreement it has satisfied itself as to the veracity, accuracy, reasonableness, scope, materiality, currency (where applicable) and completeness of such Background Information, this comparison is limited to the scope of supply of the Tram Supplier and not to the Edinburgh Tram Network in its entirety. The Tram Supplier acknowledges that it accepts all risks arising from any discrepancies, errors or omissions that subsequently appear within or between such documents and that it shall not be entitled to make any claim against the Client for an extension of time, additional payment, any relief or otherwise in respect of any such errors, discrepancies or omissions. Where there is such discrepancy or error, the Tram Supplier shall as soon as reasonably practicable, and in any event within 5 Business Days, provide the Client with proposals for resolving such discrepancy or error which comply with this Agreement. Unless, within 10 Business Days of receipt by the Client of the Tram Supplier's proposals for resolving such discrepancy or error, the Client notifies the Tram Supplier requiring it to resolve the error, discrepancy or omission in a different manner (which manner shall be binding but shall be reasonable in time and cost having regard to the Employer's Requirements), the Tram Supplier shall resolve the discrepancy in the manner proposed by it.

7.14 The Tram Supplier shall not deliver to the Client, if **tie** novates this Agreement to Infraco, information relating to manufacturing, calculations and detailed design of its trams. Tram Supplier shall however put such information into escrow in accordance with the Escrow Agreement and where required by **tie** release information to the Tram Inspector on a confidential basis.

7.15 The Tram Supplier acknowledges that the Client has supplied to it a copy of the Infraco Contract as at the Effective Date.

7A. EQUIVALENT PROJECT RELIEF

7A.1 Raising EPR Claims

7A.1.1 In the event that the Tram Supplier reasonably considers it has an entitlement to an EPR Claim, then (except to the extent that the Tram Supplier's entitlement arises out of a breach of this Agreement by the Client which has not been caused or contributed to a corresponding breach by **tie**) the Tram Supplier shall notify the Client's Representative of the details as are reasonably required by the Client to evidence such

TIE00899939_0050

EPR Claim so as to enable the Client to meet its requirements in relation to the Client Claim.

7A.1.2 Provided that details of the EPR Claim are supplied in accordance with the relevant provisions of this Agreement and so as to enable the Client to meet its requirements in relation to the Client Claim the Client shall, following the appropriate procedure under the Infraco Contract, pursue or defend such EPR Claim with **tie** diligently, expeditiously and treating such claim as if the EPR Claim was its own. The Client shall identify the EPR Claim as separate from any claim the Client has under the Infraco Contract unless it can demonstrate to the reasonable satisfaction of the Tram Supplier that it is not reasonably practicable to do so.

7A.2 Processing EPR Claims

7A.2.1 In relation to any EPR Claims the Client shall

7A.2.1.1 keep the Tram Supplier fully informed as to the progress of such EPR Claims and, if requested by the Tram Supplier and, at the cost of the Tram Supplier, provide copies of all documentation relating to the same;

7A.2.1.2 act in good faith and shall not bring the good name of the Tram Supplier into disrepute;

7A.2.1.3 not act (or omit to act) in such a manner as would result in a breach of this Agreement;

7A.2.1.4 not act (or omit to act) in a manner which threatens the continuance of the Infraco Contract; and

7A.2.1.5 procure that **tie** shall consult with the Tram Supplier and that the Tram Supplier has the right to consult with **tie**, in relation to the EPR Claim.

7A.2.2 The Client shall notify and consult with the Tram Supplier in relation to: (i) **tie**'s and the Client's proposals to resolve the Client Claim to which the EPR Claim relates; and (ii) in the event that it is not reasonably practicable to identify the EPR Claim as separate pursuant to Clause 7A.1.2, the proportion of the Client Claim which is properly and reasonably attributable to the EPR Claim. The Tram Supplier agrees that the EPR Claim shall not the exceed any relief, entitlement and/or additional payment agreed or determine in relation to the Client Claim.

TIE00899939_0051

7A.2.3 The Client shall not resolve any Client Claim under the Infraco Contract to which an EPR Claim relates without the prior written consent of the Tram Supplier, which consent shall not be unreasonably withheld or delayed. If such consent is unreasonably withheld or if the Tram Supplier has not responded to any request for consent within ten (10) Business Days, the Tram Supplier shall be deemed to have consented to such resolution, agreement, withdrawal, compromise or settlement as proposed to the Tram Supplier by the Client.

7A.2.4 Should the Tram Supplier consent to the resolution of the Client Claim as notified to it by the Client pursuant to Clause 7A.2.2, then the provisions of Clause 7A.4 (*Agreement, Certification and Payment*) shall apply.

7A.3 Dispute Resolution Procedure

7A.3.1 Should the Client or **tie** raise a dispute under the Infraco Contract in relation to an EPR Claim or the Tram Supplier does not consent to the resolution of the Client Claim or, in the event that it is not reasonably practicable to identify the EPR Claim as separate pursuant to Clause 7A.1.2, the proportion of the Client Claim which is properly and reasonably attributable to the EPR Claim in the manner notified to it by the Client pursuant to 7A.2.2, then:

7A.3.1.1 the Tram Supplier shall be entitled to invoke the Dispute Resolution Procedure under this Agreement if not already invoked;

7A.3.1.2 the Client shall, at the request of the Tram Supplier, invoke the Dispute Resolution Procedure under the Infraco Contract; and

7A.3.1.3 the Client shall, at the request of Tram Supplier, invoke the Related Disputes mechanism contained at paragraphs 55 to 57 of Schedule 13 (Dispute Resolution Procedure) under this Agreement and procure that **tie** invokes the Related Disputes mechanism contained in Schedule Part 9 (*Dispute Resolution Procedure*) of the Infraco Contract.

7A.3.2 The Parties agree that should there be a resolution of the Client Claim or, in the event that it is not reasonably practicable to identify the EPR Claim as separate pursuant to Clause 7A.1.2, the proportion of the Client Claim which is properly and reasonably attributable to the EPR Claim following Clause 7A.3.1:

7A.3.2.1 where such resolution was achieved following the Internal Resolution Procedure or Mediation (as described in the Dispute Resolution Procedure),

then the Tram Supplier and the Client shall, and the Client shall procure that **tie** shall, be responsible for its own costs in relation to this Clause 7A (*Equivalent Project Relief*);

7A.3.2.2 where such resolution was achieved following the Adjudication procedure (as described in the Dispute Resolution Procedure), then the Tram Supplier and the Client shall, and the Client shall procure that **tie,** shall submit to the decision of the adjudicator in respect of allocation of costs; and

7A.3.2.3 where it is agreed, as part of the Internal Resolution Procedure immediately prior to the matter proceeding to "Adjudication" (as described in paragraphs 10 and 11 of the Dispute Resolution Procedure), by **tie**, the Tram Supplier and the Client that the Client's sole involvement in the Client Claim is in performing administrative functions in relation to the Client Claim, and not as an interested or affected party, then the Client shall be entitled to recover all its costs incurred, such Client costs shall be minimised as far as reasonably practicable in relation to this Clause 7A (*Tramco Equivalent Project Relief*) and payment of the Client costs shall be the responsibility of **tie** or payment shared as allocated between **tie** and the Tram Supplier by the adjudicator following the "Adjudication" procedure (as described in paragraph 48.2 in the Dispute Resolution Procedure).

7A.4 Agreement, Certification and Payment

7A.4.1 The Client shall resolve the Client Claim under the Infraco Contract:

7A.4.1.1 where consent has been given or is deemed to have been given pursuant to Clause 7A.2.3, in the manner notified to the Tram Supplier under Clause 7A.2.2; or

7A.4.1.2 where there has been a resolution following Clause 7A.3.1, as directed by such outcome following Clause 7A.3.1.

7A.4.2 The Client's Representative shall certify such amount or extension of time as is resolved following Clause 7A.4.1 in respect of the EPR Claim to the Tram Supplier within ten (10) Business Days of such sum or extension of time being resolved.

7A.4.3 Upon certification by the Client's Representative pursuant to Clause 7A.4.2, the Client shall make payment to the Tram Supplier in accordance with Clause 38 (*Price and Payment*) following the date upon which entitlement to payment in respect of the

TIE00899939_0053

relevant Client Claim arises under there Infraco Contract, or grant the extension of time to the Tram Supplier.

7A.4.4 Upon certification in accordance with Clause 7A.4.2 the Tram Supplier expressly, unconditionally and irrevocably waives and abandons all its rights to recover from the Client relief, entitlement and/or additional payment greater than such certified amount or extension of time in respect of the specific circumstances giving rise thereto.

7A.5 No Tramco Equivalent Project Relief on Termination

7A.5.1 For the avoidance of doubt the provisions of this Clause 7A (*Equivalent Project Relief*) shall not apply to the calculation of compensation on termination payments pursuant to this Agreement.

7B. NOTICES, CONSENTS, APPROVALS, CERTIFICATES AND DETERMINATIONS

7B.1 In so far as the Client is obliged to act reasonably under this Agreement it will be deemed to have acted reasonably where it is acting on the request, instruction, opinion or other act of **tie** under the Infraco Contract and **tie** has acted reasonably in giving such request, instruction, opinion or other act.

7B.2 In the event the Tram Supplier, acting reasonably, does not consider that the Client has acted reasonably, the Tram Supplier shall be entitled to invoke the dispute resolution procedure under Clause 7A.3.

7C. TRAM SUPPLY ADVANCE WORKS AGREEMENT

7C.1 On the Commencement Date, all work performed by the Tram Supplier under the Tram Supply Advance Works Agreement shall be deemed to have been performed under the Tram Supply Agreement and the Tram Supply Advance Works Agreement shall terminate.

8. PROJECT PARTNERING

8.1 The Parties agree to work in mutual co-operation to fulfil their agreed roles and responsibilities and apply their expertise to carry out and complete the Tram Works in accordance with this Agreement.

8.2 The Client and the Tram Supplier shall procure that each Client Party and each Tram Supplier Party (as appropriate) shall work in accordance with the principles set out in Clause 8.1.

8.3 Subject to Clause 8.4, each Party ("**First Party**") undertakes to co-operate with the other ("**Second Party**") in order to facilitate the performance of this Agreement and in particular the First Party shall:

8.3.1 approach all Permitted Variations on a collaborative and Open Book Basis;

8.3.2 use reasonable endeavours to avoid unnecessary complaints, disputes and claims against or with the Second Party;

8.3.3 comply with the provisions of the Dispute Resolution Procedure in relation to any such complaints, disputes and claims with or against the Second Party;

8.3.4 not interfere with the rights of the Second Party in performing its obligations under this Agreement, nor in any other way hinder or prevent the Second Party from performing those obligations or from enjoying the benefits of its rights;

8.3.5 take reasonable steps to mitigate any foreseeable losses and liabilities of the Second Party which are likely to arise out of any failure by the First Party to take any of the steps referred to in Clauses 8.3.2 to 8.3.4 (inclusive); and

8.3.6 take all reasonable steps to manage, minimise and mitigate all costs.

8.4 Nothing in Clause 8.3 shall:

8.4.1 interfere with the right of each of the Parties to arrange its affairs in whatever manner it considers fit (in compliance with Law) in order to exercise its rights and perform its obligations under this Agreement (in compliance with Law); or

8.4.2 relieve either Party from any obligation contained in this Agreement or from any obligation to pay any debt due and payable under this Agreement.

8.5 Senior representatives from the Parties shall meet on a quarterly basis (or as may be otherwise agreed by the Parties) to review:

8.5.1 any matter which has adversely affected or may adversely affect:

8.5.1.1 the completion of the Tram Works;

8.5.1.2 the performance and presentation of the Edinburgh Tram Network;

8.5.1.3 the functioning of the City of Edinburgh (including other modes of transport) and the people of Edinburgh, because of the carrying out of the Tram Works;

TIE00899939_0055

and/or

8.5.1.4 the Tram Supplier's ability to perform its obligations in terms of this Agreement; and

8.5.2 any proposal from either Party to:

8.5.2.1 minimise costs; and/or

8.5.2.2 optimise the performance and quality of the Edinburgh Tram Network.

8.6 Either Party may propose measures to address the matters set out in Clause 8.5.1 and a determination of what measures (if any) should be undertaken by the Tram Supplier and/or the Client to address such matters shall be considered in accordance with and subject to each Party's existing rights, obligations and the existing contractual mechanisms under this Agreement including but not restricted to the rights, obligations and contractual mechanisms set out in Clause 47 *(Relief Events)*, Clause 49 (*Compensation Events*), Clause 20 *(Changes)* and Clause 48 *(Qualifying Changes in Law)*.

8.7 Any proposal from either Party in terms of Clause 8.5.2 shall be reviewed in accordance with Clause 20 (*Changes*).

8.8 As required by the Client, the Tram Supplier shall procure the attendance of any of the Tram Supplier Parties at the meetings described in Clause 8.5.

9. SUPPORT FOR SYSTEM INTEGRATION

9.1 The Tram Supplier shall cooperate with the Client (in any way the Client acting reasonably may request, but for the avoidance of doubt additional Works not included in the scope of this Agreement shall be at the cost of the Client) in ensuring that the following key elements of the system integration of the Tram Works with the Edinburgh Tram Network are implemented, including:

9.1.1 determination of the sub-system performance requirements and to demonstrate by calculation that when such sub-systems are integrated they shall achieve the Edinburgh Tram Network System Availability Targets set out in Schedule 2 (*Employer's Requirements*) (including the Operations Performance Specification)

9.1.2 management of technical interfaces as set out in the Tram Employer's Requirements and as developed by the Client from time to time including issues such as electro-

TIE00899939_0056

magnetic compatibility, noise, vibration and wheel/rail interface ensuring that each and every material issue arising is satisfactorily closed out;

9.1.3 test management cooperation including input to the preparation of method statements, test scripts, the setting of pass/fail criteria and analysis in so far as the tests relate to the Trams;

9.1.4 alignment of operations and maintenance procedures to ensure they form a whole and safe system of work in so far as they relate to the maintenance of the Trams;

9.1.5 cooperation over system activation;

9.1.6 safety assurances and the Case for Safety; and

9.1.7 preparation and updating of a requirements traceability matrix which shall have the ability to trace the requirements of the Tram Works and/or the Tram Requirements Specification and Tram Employer's Requirements through the design process, the testing procedures and the operation of the Edinburgh Tram Network in so far as it relates to the Trams.

9.2 The Tram Supplier shall cooperate with the Client in ensuring that the delivery and commissioning of the Trams is fully integrated with the rest of the Edinburgh Tram Network but for the avoidance of doubt additional works not included in the scope of this Agreement shall be at the cost of the Client.

9.3 The Tram Supplier shall carry out all of the system integration activities described in the Tram Interface Specification.

9.4 The Tram Supplier shall liaise with the Operator and the Client as instructed by the Client in relation to:

9.4.1 system operation and related design issues;

9.4.2 the Systems Acceptance Tests; and

9.4.3 operational defects.

9.5 The Tram Supplier shall cooperate with the Client in ensuring that all elements of the design (which are relevant to the carrying out of the Tram Works) relative to the Edinburgh Tram Network are compatible with system integration and the Tram Supplier shall make qualified

TIE00899939_0057

personnel available to support effective system integration, acting reasonably and within its scope of supply.

9.6 The Tram Supplier shall be responsible for managing the configuration control of the modification status of the Trams. Specifically, but not exclusively controlling the introduction of software changes and hardware modifications through version control and providing documentation detailing the operational implications (if any) of the modifications, a minimum of 5 Business Days before their planned introduction.

9.7 The Tram Supplier shall co-operate and provide all information reasonably requested by the Client relating to the Tram Works so as to enable the Client to discharge its obligations under the Employer's Requirements including the provision of all information referred to in the Tram Interface Specification.

9.8 The Client shall, in relation to the tram interface and Depot, give adequate consideration to any issues relating to interface with the tram or tram maintenance raised in writing by the Tram Supplier and shall ensure that **tie** is informed in writing of any such issues raised.

10. INTERFACE WITH THE OPERATOR

Design Input and Technical Requirements

10.1 In accordance with Schedule 9 (*Review Procedure*), the Tram Supplier shall take account of any comments made by the Client or **tie** in relation to operational issues when refining the Tram Maintenance Plan, standards, procedures and safety documentation in accordance with Schedule 2 (*Employer's Requirements*) and when supporting system integration in accordance with Clause 9 (*Support for System Integration*). The Tram Supplier shall comment on functional and maintainability issues to the Client during the design and construction process, seeking to optimise the whole life asset cost of the Tram. These comments shall be delivered to **tie**, the Operator and the Client.

Operation and Maintenance Procedures

10.2 The Tram Supplier acknowledges that the Operator shall be responsible for Operator Maintenance of the Edinburgh Tram Network and in relation to such maintenance, the Tram Supplier shall at all times liaise with the Operator in its performance of the responsibilities set out in the Operator Maintenance Plan and co-ordinate such performance with the carrying out of the Tram Works. The Tram Supplier and the Client agree to work in mutual cooperation to allow the Operator to perform such maintenance in accordance with the terms of the Operator

Maintenance Plan with a view to ensuring that the Edinburgh Tram Network as a whole and each part of it are continuously available for the provision of Transport Services.

10.3 As directed by the Client, the Tram Supplier shall accept and act upon reasonable instructions from the Operator in respect of specific contractual rights including safety management, possession co-ordination and maintenance interaction. Should these instructions be likely to impede or delay the execution of works by the Tram Supplier then the Operator shall be required to confirm them in writing to the Tram Supplier. In so far as the written instructions do not arise from an act or omission under this Agreement or procedures by the Tram Supplier the Tram Supplier shall not be liable for such non-execution or delay and penalties shall not be applied. If the instructions or actions require the addition of works or duties or deliveries not included in the scope of this Agreement, the Tram Supplier shall be entitled to claim reasonable, substantiated economic compensation for such works from the Client in accordance with Clause 49 (*Compensation Events*). The Client shall remain bound by such written instructions and/or actions issued by the Operator pursuant to this sub-clause until such time as they are rescinded.

10.4 The Tram Supplier shall work together with the Operator with the continual objective that the Tram Works be delivered in accordance with the Tram Employer's Requirements. The Tram Supplier:

10.4.1 shall respond promptly and in compliance with the timing commitments set out in this Agreement to any notification by the Operator that there is a requirement for Tram Works of which the Operator becomes aware, and shall give the Client a copy of any said notification which is received;

10.4.2 shall promptly notify the Operator, **tie** and the Client of any requirement for Operator Maintenance of which the Tram Supplier becomes aware;

10.4.3 shall co-operate with the Operator in relation to the planning and execution of the Tram Works; and

10.4.4 shall co-operate with the Operator in relation to any aspect of the Tram Employer's Requirements where relevant to the Tram Supplier's scope of supply.

10.5 If, at any time after the Commencement Date, it appears likely to the Tram Supplier that any planned works or activities to be carried out by the Tram Supplier or Tram Maintainer will necessitate interruption to or restriction of the Transport Services on the Edinburgh Tram Network, the Tram Supplier (as appropriate) shall:

TIE00899939_0059

10.5.1 notify the Client, **tie** and the Operator not less than 30 days prior to such planned works or activities, and take all reasonable steps to support the Operator in notifying passengers as soon as reasonably practicable in advance of the carrying out of such planned works or activities, of the nature of such work and the likely disruption or restriction of the Transport Services; and

10.5.2 take all steps, where required by the Client, which are reasonably practicable to minimise the adverse consequences of such works or activities to passengers.

10.6 In the event of any unplanned works or activities to be carried out by the Tram Supplier as a result of a system failure, breakdown or an emergency, the Tram Supplier shall:

10.6.1 notify the Client and the Operator as soon as possible of the nature of such works or activities and the likely disruption to the Trams; and

10.6.2 take all steps which are reasonably practicable to minimise the adverse consequences of such works and activities to passengers. The Tram Supplier shall take such steps that shall include support to the Operator or the Client as the case may be.

10.7 Where the Tram Supplier has been notified by the Client of any proposed variation under the DPOFA which in the Client's opinion (acting reasonably) may materially affect the Tram Supplier's performance of its obligations or the exercise of its rights under this Agreement, the Tram Supplier shall respond with comments within 10 Business Days of being notified by the Client of any such proposed variation under DPOFA. Failure by the Tram Supplier to respond as stipulated in this Clause shall be a bar to any claim for relief or compensation under this Agreement.

10.8 The Tram Supplier shall provide a permanent representative for the Project Safety and Certification Committee ("**PSCC**") who shall be responsible for the Tram Supplier's mandatory participation in and technical contribution to the PSCC's output and the discharge of its responsibilities.

10.8.1 The Tram Supplier's obligations shall encompass as a minimum:

10.8.1.1 participation on a compulsory basis in all liaison meetings with HMRI, the Independent Competent Person and the Emergency Services;

10.8.1.2 the development and implementation of a safety management system (the "**Tram Supplier Safety Management System**") which shall address without limitation:

TIE00899939_0060

(a) Tram Supplier staff competency and its continual assessment;

(b) training on all safety related issues;

(c) safety procedures;

(d) record keeping and audit;

(e) certification of materials and equipment;

(f) frequency and mode of audit by the Tram Supplier of the Tram Supplier Safety Management System;

(g) incident response and management; and

(h) continual improvement and best practice.

10.9 The Client, **tie** and the Operator shall be entitled to review the Tram Supplier's Safety Management System (and its implementation) at any time upon notice which is appropriate in the circumstances and in any case within no more than 3 days notice. For the avoidance of doubt, **tie**, the Client and the Operator shall be entitled to immediate access upon the occurrence of an incident which potentially involves the safe functioning of the Tram on the Edinburgh Tram Network.

10.10 It shall be the responsibility of the Tram Supplier to undertake and complete verification, through agreed procedure, of the safety and service readiness of the Tram or Trams prior to use for testing and commissioning and to certify this status to the Client, **tie** and to the Operator in an agreed form.

10.11 In the event that the Operator can demonstrate to the Tram Supplier that the Tram or Trams are not ready for testing and commissioning, the Tram Supplier shall notify the Client and **tie,** and the Tram Supplier shall rectify any deficiency in accordance with this Agreement which is preventing the commencement of testing and commissioning in accordance with this Agreement.

10.12 The Tram Supplier shall liaise effectively with the Client, **tie** and the Operator in co-ordination of health and safety issues at the Depot in accordance with the Depot Sub-Licence.

10.13 Following the Service Commencement Date, the day-to-day operation of the Edinburgh Tram Network shall be the responsibility of the Operator. For the purpose of operating and maintaining the Edinburgh Tram Network and to enable the efficient operation of the

Edinburgh Tram Network, the Tram Supplier shall provide technical advice free of charge to the Client, the Operator and **tie** regarding the operational deployment and integration of the various components of the Tram and any other information regarding their design, construction, standards, integration, operation and maintenance which the Infraco, the Operator and/or **tie** may reasonably request.

Facilities and Access

10.14 The Tram Supplier shall at all times provide to the Operator, **tie** and the Client such access to the site, and the places where the Tram Works are being performed, during the performance of the Tram Works as the Operator may reasonably require and in accordance with Clause 10.15, provided that such access shall not disrupt or interfere with the performance by the Tram Supplier or any Tram Supplier Party of the Tram Works and the Client shall, and shall procure that the Operator shall, during any period when it or they have access to the site or the Tram Works, comply with all rules and regulations applicable to working at those premises for the safety of persons and convenience of the public.

10.15 The Tram Supplier acknowledges that the Operator, **tie** and the Client will require access to the site, and the places where the Tram Works are being performed in order to prepare for the operation of the Edinburgh Tram Network from the Service Commencement Date. The Tram Supplier agrees that it will co-operate with the Operator, **tie** and the Client and plan to avoid any interference with mobilisation by the Operator.

10.16 The Client agrees that where any damage is caused to the Tram Works by the Operator or by **tie**, the repair of such damage shall not be part of the Tram Supplier's obligations under this Agreement but where the Client requires the Tram Supplier to repair such damage, it will issue a Client Notice of Change in respect of such repair works.

10.17 The Client shall at all times provide to the Tram Supplier access to the site and the places where the Tram Works or Tram Maintenance Services require to be performed. The Tram Supplier acknowledges that such access may not be exclusive and the Tram Supplier and the Client shall co-ordinate with each other in relation to the provision of access. For clarity, such access includes timeous access to the Depot.

System Acceptance

10.18 The Tram Supplier shall ensure that at all times it works closely and effectively with the Operator in the performance of both the Operator and the Tram Supplier's obligations pursuant

TIE00899939_0062

to the Systems Acceptance Tests and the associated obligations on testing and commissioning set out in Schedule 2 (*Employer's Requirements*).

Partnering

10.19 The Tram Supplier shall use reasonable endeavours to work collaboratively with the Operator at all times in order to:

10.19.1 maximise productivity during the Tram Works and minimise disruption for the public and third parties;

10.19.2 ensure the effective discharge of the Tram Supplier's obligation to support system integration in accordance with Clause 9 (*Support for System Integration*);

10.19.3 maintain the highest standards achievable with regard to the provision of the Tram Works;

10.19.4 minimise and give best advance notice to one another and to the Client and **tie** of any interruption to Tram Works caused by any Tram Supplier Default, maintenance (planned or unplanned) or third party incident;

10.19.5 safeguard proper performance of the Tram Works and all obligations under this Agreement; and

10.19.6 mutually support adherence to the Client's Programme and all related timelines and programmes and to share with the Client, **tie** and the Operator on a systematic basis, Deliverables and key information connected with such adherence.

Nuisance

10.20 The Tram Supplier shall at all times seek to minimise any nuisance or inconvenience to or interference with the business or operations of the owners, tenants or occupiers of premises in the locality of the Depot, to TEL's bus operations and to the public generally, including measures to reduce the nuisance from noise, dust, smell, fumes and vibration during the carrying out of the Tram Works. The Tram Supplier shall comply with the requirements of the Code of Maintenance Practice in this regard.

11. GENERAL WARRANTIES

11.1 The Tram Supplier represents and warrants to the Client that:

TIE00899939_0063

11.1.1 none of the Tram Supplier, or any officer, agent or employee of the Tram Supplier or any Affiliate of the Tram Supplier has committed a Prohibited Act;

11.1.2 all factual information in relation to the Trams which has been given by the Tram Supplier or any of its respective officers, employees, agents or Affiliates in the Tram Supplier's Proposals or in any written response to subsequent written requests or enquiries by the Client was when given and remains as at the Effective Date, true and accurate in all material respects and all projections, estimates and statements of belief in the Tram Supplier's Proposals or such responses have been prepared with due care and attention and there is no fact or matter known to the Tram Supplier and not already disclosed in writing to the Client's Representative which renders any such information untrue, inaccurate or misleading or might, if disclosed, adversely affect the decision of anyone considering whether or not to contract with the Tram Supplier;

11.1.3 it:

11.1.3.1 is duly incorporated under the law of Spain and has the power to own its own assets and carry on its own business; and

11.1.3.2 has full power and authority to enter into and perform this Agreement which constitutes a binding obligation on the Tram Supplier in accordance with its terms;

11.1.3.3 the Tram Supplier will not, by performing its obligations under this Agreement, be in breach of any undertaking, agreement or legal obligation of any nature in respect of any third party or of any applicable Law so as to have a material adverse effect on its ability to discharge its obligations under this Agreement;

11.1.4 the Tram Supplier is not involved in any dispute with HM Revenue and Customs or any other fiscal or regulatory authority in any jurisdiction concerning any matter which could affect the business of the Tram Supplier or its ability to perform the Tram Works in any way;

11.1.5 the Tram Supplier's Proposals or responses to subsequent enquiries by the Client or any Client Party relating to the manner in which the Tram Supplier proposes to perform the Tram Works does not involve the use of any designs, materials, know how, trademark, business name, or processes which represent or would represent a breach of any Intellectual Property Rights belonging to any third party, or a breach of

TIE00899939_0064

any duties of confidentiality owed to, any third party, or otherwise infringe the legal rights of any third party;

11.1.6 no act has been committed or event or circumstance occurred in respect of the Tram Supplier which constitutes a Tram Supplier Default as at the Effective Date and no circumstances are known which make it likely that such a Tram Supplier Default will occur during the Term;

11.1.7 no litigation, arbitration or proceedings are in progress or, to the best of the knowledge and belief of the Tram Supplier, are pending or threatened, against it or any of its assets which might have an adverse effect on the ability of the Tram Supplier to observe and perform the Tram Works;

11.1.8 the performance of the Tram Works does not create any situation in which a conflict of interest arises for the Tram Supplier;

11.1.9 the Tram Supplier does not use any processes and is not engaged in any activities which involve the misuse of any confidential or proprietary information belonging to any third party;

11.1.10 the Tram Supplier's provision of any Deliverables and the use by the Client of any of the Deliverables provided to it as part of the Tram Works has not infringed and shall not infringe any third party's Intellectual Property Rights; and

11.1.11 there has been no material adverse change to the financial condition of the Tram Supplier since the audited accounts for the financial year 2007 including any matter resulting in a downgrade of the Tram Supplier's credit rating with any commercially acknowledged independent rating agency reporting the transportation sector.

11.2 Each of the warranties and representations set out in Clause 11.1 shall be construed as a separate and independent warranty and (save where expressly provided to the contrary) shall not be limited or restricted by reference to or inference from any other terms of this Agreement.

11.3 The Tram Supplier hereby undertakes with the Client that it will as soon as reasonably practicable (and in any event within 3 Business Days) disclose in writing to the Client any event or circumstance which may arise or become known to it after the date of this Agreement which is materially inconsistent with any of the warranties or representations set out in this Clause 11 (*General Warranties*) or which has or is likely to have an adverse effect on the Project.

TIE00899939_0065

11.4 The warranties and representations set out in Clause 11.1 shall be deemed to be repeated by the Tram Supplier as at the Commencement Date and thereafter on the Works Commencement Date and each date on which a Milestone Payment is made.

11.5 Neither **tie** nor the Client gives any warranty or undertaking or makes any representation as to the completeness, currency, accuracy or fitness for any purpose of any of the Background Information and, subject to Clause 41.5, neither the Client, **tie** nor any Client Party or any of their respective members or advisers nor any of their employees shall be liable to any party to this Agreement in contract, delict (including negligence or breach of statutory duty), or otherwise as a result of:

11.5.1 any inaccuracy, error, defect, omission, unfitness for any purpose or inadequacy of any kind whatsoever in the Background Information; and/or

11.5.2 any failure to make available to the Tram Supplier or any of the Tram Supplier Parties any materials, documents, drawings, plans or other information relating to the Project,

provided that nothing in this Clause 11.5 shall exclude any liability in respect of any statements made or information provided fraudulently.

12. CONSENTS

12.1 The Tram Supplier shall (at its own cost and expense):

12.1.1 obtain and maintain in effect all Consents which may be required for the performance of the Tram Works and/or pursuant to this Agreement from time to time; and

12.1.2 implement each Consent within the period of its validity and in accordance with its terms.

12.2 The Tram Supplier shall provide copies of such Consents to the Client's Representative.

12.3 Acknowledgement by the Client of the photocopies of Consents provided to them pursuant to Clause 12.2 shall not in any way affect the Tram Supplier's obligations or relieve the Tram Supplier from its obligations pursuant to this Clause 12 (*Consents*) or otherwise.

12.4 Where **tie**'s or the Client's or the Operator's authorisation or completion of documentation in respect of compliance with any Law or the obtaining of any Consent may be required, the Tram Supplier shall furnish the relevant documentation to **tie** or the Client or the Operator (as the case may be) and, where possible, permit **tie** or the Client or the Operator a period of 10 Business Days to authorise or complete it.

TIE00899939_0068

12.5 The Client shall endeavour to assist the Tram Supplier with applications for Consents which it is required to obtain under this Agreement for the performance of the Tram Works where the Client considers, in its sole discretion, that such assistance would facilitate the Tram Supplier in obtaining any Consents. Such assistance shall in no way affect the principle set down in Clause 12.1 that it is the Tram Supplier's obligation to obtain, maintain and implement the Consents required by this Agreement. Subject to Clause 41.3, the Client shall not incur any liability whatsoever to the Tram Supplier in connection with its actions pursuant to this Clause 12.5.

12.6 The Tram Supplier shall keep the Client's Representative and the Tram Inspector informed about its programme for seeking Consents and its progress in obtaining Consents and, within 5 Business Days of a Consent being granted or refused, supply to the Client's Representative and the Tram Inspector a copy of such Consent or refusal.

12.7 For the avoidance of doubt, where it is necessary, in order to achieve the Tram Manufacturing and Delivery Programme for applications for Consents to be made before the Works Commencement Date, such applications shall be prepared and submitted in accordance with the applicable rules and procedures before the Works Commencement Date, within the timescales and to the extent necessary to meet the Tram Manufacturing and Delivery Programme.

12.8 The Tram Supplier shall provide such information and assistance as the Client may reasonably request to assist the Client in obtaining, maintaining in effect and implementing all other consents which may be required for the purposes of the Project.

13. CLIENT'S REPRESENTATIVE

13.1 The Client's Representative shall:

13.1.1 exercise the functions and powers of the Client in relation to the Project which are identified in this Agreement as functions and powers to be carried out by the Client's Representative;

13.1.2 exercise such other functions and powers of the Client under this Agreement as the Client may notify in writing to the Tram Supplier from time to time; and

13.1.3 be the primary point of contact for the Tram Supplier with the Client,

and the Tram Supplier shall observe, and shall procure that any Tram Supplier Parties observe, all reasonable instructions of the Client and the Client's Representative given in accordance

TIE00899939_0067

with this Agreement. The Tram Supplier shall not, and shall procure that any Tram Supplier Parties shall not, act upon any instruction from any other party unless confirmed by the Client or the Client's Representative in writing. If the Tram Supplier or any Tram Supplier Parties shall receive any instructions from any other parties, the Tram Supplier shall notify the Client or the Client's Representative immediately.

13.2 The Client's Representative shall be entitled at any time, by notice in writing to the Tram Supplier, to authorise any other persons to exercise the functions and powers of the Client delegated to him, either generally or specifically. Until further notice from the Client, any act of any such person shall, for the purposes of this Agreement, constitute an act of the Client's Representative and all references to "the Client's Representative" in this Agreement (apart from Clause 13 (*Client's Representative*)) shall be taken as references to such person so far as they concern matters within the scope of such person's authority.

13.3 The Client may by notice in writing to the Tram Supplier change the identity of the Client's Representative. Such change shall have effect on the date specified in written notice.

13.4 During any period when a Client's Representative has not been appointed (or when the Client's Representative is unable through illness, incapacity or any other reason whatsoever to carry out or exercise his functions under this Agreement), the Client shall carry out the functions which would otherwise be performed by the Client's Representative.

13.5 No decision, act or omission of the Client, or the Client's Representative shall, except as otherwise expressly provided in this Agreement:

13.5.1 in any way relieve or absolve the Tram Supplier from, modify, or act as a waiver or personal bar of, any liability, responsibility, obligation or duty under this Agreement;

13.5.2 in the absence of an express written instruction or authorisation issued by the Client under Clause 20 (*Changes*), constitute or authorise a variation; or

13.5.3 be construed as restricting or binding the Client in any way save with regard to the specific project matters to which it relates.

13.6 The Tram Supplier shall be entitled to treat all instructions and directions of the Client's Representative in respect of any functions and powers of the Client which have been delegated to the Client's Representative in accordance with Clause 13.1 as those of the Client provided always that such instructions or directions of the Client's Representative are in writing, are not in conflict with and is consistent with this Clause 13 (*Client's Representative*) and the other provisions of this Agreement or any other express instructions or directions of the Client, and

TIE00899939_0068

the Tram Supplier shall not be required to determine whether an express authority has in fact been given. The Tram Supplier shall, as soon as reasonably practicable, bring to the attention of the Client any instructions or directions that are given to the Tram Supplier that are ambiguous or in conflict or inconsistent, and the Client will verify such instructions in writing.

13.7 If for any reason the Client's Representative considers it necessary to give any instructions or directions orally, then, provided that the Client confirms such instruction or direction in writing within five Business Days, such oral instruction or direction shall be deemed to be an express instruction or direction of the Client.

13.8 Notwithstanding any other provision of this Agreement, the Tram Supplier shall not accept instruction from any party other that the Client and shall on receipt of any such instruction inform the Client of the same.

14. TRAM SUPPLIER'S REPRESENTATIVE

14.1 The Tram Supplier shall appoint a Tram Supplier's Representative who shall:

14.1.1 act as the principal point of contact for the Client, and the Client's Representative in relation to all matters related to this Agreement;

14.1.2 have full authority to act on behalf of the Tram Supplier for all purposes of this Agreement, and the Client and the Client's Representative shall be entitled to treat all instructions and directions of the Tram Supplier Representative as those of the Tram Supplier;

14.1.3 manage and co-ordinate the provision of the Tram Works by the Tram Supplier (and any Tram Supplier Party) and the integration of provision of the Tram Works with the tasks being performed by the Client's internal team and the other advisers appointed by the Client and/or **tie** (where such tasks have been notified to the Tram Supplier); and

14.1.4 liaise with the Client's Representative in relation to various matters including the scope of the Tram Works to be carried out from time to time.

14.2 The Tram Supplier may by written notice to the Client change the identity of the Tram Supplier's Representative. Where the Tram Supplier wishes to do so, it shall by written notice to the Client propose a substitute for approval, taking account of the need for liaison and continuity in respect of the provision of the Tram Works and the Tram Manufacturing and

TIE00899939_0069

Delivery Programme when the change is proposed. Such substitute shall be subject to the prior written approval of the Client (not to be unreasonably withheld or delayed).

14.3 The Tram Supplier shall also nominate a deputy to the Tram Supplier's Representative. During any period when the Tram Supplier's Representative is unable through illness, incapacity, annual leave or any other reason whatsoever to carry out or exercise his functions under this Agreement, such deputy shall carry out the functions which would otherwise be performed by the Tram Supplier's Representative.

15. DESIGN DEVELOPMENT

15.1 The Tram Supplier shall develop and finalise the Deliverables in accordance with this Agreement, and the Client shall be entitled to review the Deliverables (which shall include any amendment to any submitted item) in accordance with Schedule 9 (*Review Procedure*).

15.2 The Tram Supplier shall submit the design of any changes and any other Deliverables associated with any Permitted Variations to the Client's Representative for review pursuant to Schedule 9 (*Review Procedure*).

15.3 The Tram Supplier shall allow the Client's Representative, at any reasonable time, a reasonable opportunity to view any Deliverable at any stage of development, and this opportunity shall be made available to the Client's Representative as soon as reasonably practicable following receipt of any written request from the Client's Representative. Where electronic versions of the Deliverables are available, the Tram Supplier shall upload such Deliverables (including any drawings comprised within the Deliverables) on the extranet established and maintained by the Client as soon as practicable.

15.4 The Tram Supplier shall provide the Deliverables in accordance with the Deliverables Programme set out in part 5 of Schedule 4 (*Programme*).

15.5 During the preparation of the Deliverables, the Client and/or the Client's Representative shall at its discretion but acting reasonably be entitled to call for a meeting to discuss the development of any Deliverable, and the Tram Supplier shall give due consideration to any comments made by the Client or the Client's Representative at any such meetings. As soon as reasonably practicable following any such meeting, the Tram Supplier will prepare and circulate to those attending the meeting, a report listing the Deliverables discussed and any comments made at such meeting.

15.6 If it should be found that the Deliverables do not fulfil the requirements of this Agreement or the needs of any Approval Bodies, the Tram Supplier shall at its own expense amend the

TIE00899939_0070

Deliverable. Such amendment shall be made in accordance with Schedule 9 (*Review Procedure*) and such amendment and rectification shall ensure that the Deliverable shall satisfy the requirements of this Agreement and any Approval Bodies.

15.7 The Tram Supplier shall provide the Client with all Deliverables in accordance with the terms of this Agreement and where no timescale for provision of such Deliverables is specified in the Deliverables Programme, such Deliverables shall be provided to the Client as soon as reasonably practicable. The Tram Supplier shall provide to the Client three copies of the agreed Deliverables in hard copy form and one copy in an agreed soft copy form (as appropriate to the format of the Deliverables).

15.8 The Tram Supplier accepts all risks arising from any conflicts, ambiguities, discrepancies, errors or omissions that subsequently appear within or between any of the Tram Requirements Specification and any of the other Deliverables, and the Tram Supplier shall not be entitled to make any claim against the Client for an extension of time, payment or otherwise in respect of any such conflicts, ambiguities, discrepancies, errors or omissions.

15.9 The Tram Supplier shall within 10 Business Days notify the Client upon becoming aware of any conflicts, ambiguities, discrepancies, errors or omissions within or between any of the Tram Requirements Specification, and any of the other Deliverables. Where there are any conflicts, ambiguities, discrepancies, errors or omissions, the Tram Supplier shall provide with any such notification its proposals for resolving such conflicts, ambiguities, discrepancies, errors or omissions in compliance with this Agreement. Such proposals could include the suggestion that no action is required. The Tram Supplier shall proceed with its proposals to resolve any such conflicts, ambiguities, discrepancies, errors or omissions as soon as reasonably practicable. If the proposal from the Tram Supplier is that no action is required or the Client does not agree with the action proposed by the Tram Supplier, the Client may notify the Tram Supplier, within 10 Business Days of the Tram Supplier's notice, to resolve any conflicts, ambiguities, discrepancies, errors or omissions in a different manner (which notification shall be binding on the Tram Supplier).

16. MEETINGS

16.1 The Tram Supplier and the Client shall procure that the Tram Supplier's Representative and the Client's Representative (respectively) attend monthly progress meetings at the Client's premises in Edinburgh or at the Tram Supplier's premises (unless agreed otherwise in writing), with **tie**, any **tie** Party, the Tram Inspector and/or any person authorised by the Tram Supplier's Representative or the Client's Representative in writing to review progress in relation to the design, manufacture, delivery, testing and/or commissioning of the Trams.

TIE00899939_0071

16.2 Notwithstanding the provisions of Clause 16.1, the Client's Representative or the Tram Supplier's Representative may call a meeting at any time to review progress with the design, manufacture, delivery, testing and/or commissioning of the Trams or any other matter provided that the Representative calling such meeting gives all other Representatives at least 5 Business Days written notice of such meeting, at a location agreed between the parties.

16.3 If reasonably requested by the Client, the Tram Supplier shall attend and shall procure that the Tram Supplier's Representative, any Key Personnel and/or Tram Supplier Parties attend any meetings called by **tie**, **tie's** Representative, any **tie** Party, the Client, the Client's Representative or any other party .

16.4 Any relevant Party (including representatives of such Parties) may with the Client's Representative's prior written consent (such consent not to be unreasonably withheld or delayed) participate in a meeting called under this Agreement through the medium of one or more conference telephones or similar form of communication equipment, provided that all persons participating in the meeting are able to hear and speak to each other throughout such meeting.

16A. WORK TO BE TO SATISFACTION OF THE CLIENT

16A.1 The Tram Supplier shall complete the Tram Works in strict accordance with this Agreement to the satisfaction of Client (acting reasonably).

16A.2 The whole of the materials, Tram Related Equipment and labour to be provided by the Tram Supplier under Clause 7 (*General Obligations*) and the mode, manner and speed of construction of the Tram Works are to be in accordance with this Agreement.

16B. ERRORS AND OMISSIONS IN THE TRAM WORKS

16B.1 If during the carrying out of the Tram Works and/or where the Tram Supplier has completed the Tram Works, the Client becomes aware of any error or omission in the carrying out of the Tram Works or of any other breach of this Agreement, the Client shall notify the Tram Supplier, who shall, at its own expense and in liaison with the Client, rectify any error or omission or breach or, where this is agreed by the Client to be impracticable or undesirable, take such other agreed steps to address the error or omission.

16B.2 Any reasonable and demonstrable direct costs to the Client associated with the Client remedying any such errors or omissions or breaches shall be paid by the Tram Supplier to the Client.

TIE00899939_0072

16B.3 These arrangements shall in no respect diminish the Client's ability to recover damages from the Tram Supplier for direct losses incurred by the Client consequent upon the error or omission or breach in question.

16B.4 If and to the extent that the Tram Supplier fails to carry out the necessary rectification and/or other agreed steps in accordance with Clause 16B.1 to the Client's reasonable satisfaction and/or within a reasonable period of time, the Client shall be entitled to carry out such rectification and/or other agreed steps itself, or procure the carrying out by a third party of such rectification and/or other agreed steps in accordance with Good Industry Practice at the Tram Supplier's expense and shall recover any costs from the Tram Supplier as a debt.

17. TESTING AND COMMISSIONING INSPECTIONS

17.1 The Representatives or anyone authorised by them to act on their behalf, **tie**, **tie's** Representative and the Tram Inspector shall be entitled to attend and witness any and all inspections and/or tests carried out pursuant to Clauses 28 (*Pre-Delivery Inspections and Factory Acceptance Tests*), 30 (*Tram Delivery Tests and Certification*) and 31 (*Training, Commissioning, Testing and Certification*).

17.2 The Tram Supplier's Representative shall give the other Representatives, **tie** and **tie's** Representative at least 10 Business Days notice before each and every inspection or test is due to take place pursuant to Clauses 28 (*Pre-Delivery Inspections and Factory Acceptance Tests*), 30 (*Tram Delivery Tests and Certification*) and 31 (*Training, Commissioning, Testing and Certification*).

17.3 The Tram Supplier shall procure that:

17.3.1 without prejudice to Clause 24 (*Audit and Inspection*), the Representatives or anyone authorised by them to act on their behalf, **tie**, **tie's** Representative and the Tram Inspector shall have such access as is necessary at all reasonable times during normal working hours to the sites where the Trams or their components are to be designed, manufactured, tested or assembled provided that the Tram Supplier is given sufficient prior notice; and

17.3.2 at the manufacturing sites, the Tram Inspector, the Operator's representative, the Client's Representative and **tie's** Representative shall be given and shall be entitled to use such office accommodation and facilities as may reasonably be available provided that in using such office accommodation and facilities the Tram Inspector, the

TIE00899939_0073

Operator's representative, the Client's Representative and **tie's** Representative shall comply with the reasonable instructions of the Tram Supplier.

17.4 The Tram Supplier shall (where it has access to any site and/or premises in relation to this Agreement which are not controlled or owned by it) comply with all rules and regulations notified to it by the owner or occupier of such site or premises or otherwise applicable to it in relation to it accessing and using such site and/or premises.

17.5 All operations carried out by the Tram Supplier in performing its obligations under this Agreement in Edinburgh shall be conducted with due regard to third parties and so as to minimise noise, disturbance and/or interference with third parties.

18. PERSONNEL

18.1 The Tram Supplier shall ensure that the Key Personnel in respect of the Pre-Works Development Services are appointed on or prior to the Commencement Date and that the Key Personnel in respect of the rest of the Tram Works are appointed on or prior to the Works Commencement Date. The Tram Supplier shall obtain the prior written consent of the Client's Representative (such consent not to be unreasonably withheld or delayed) before removing or replacing any Key Personnel at any time from the Commencement Date up to the date of the issue of the Certificate of Tram Commissioning in respect of the last Tram.

18.2 The Tram Supplier acknowledges that the Key Personnel are essential to the proper performance of the Tram Supplier's obligations under this Agreement. The Tram Supplier shall ensure that the role of any Key Personnel is not vacant for any longer than 10 consecutive Business Days and shall replace any Key Personnel who leave its employment with employees with similar levels of training expertise and experience.

18.3 The Tram Supplier shall, and shall procure that its Sub-contractors shall, maintain a true and correct set of records of all transactions relating to the manufacture of the Tram or part of the Tram and make such records available at all reasonable times for inspection by the Client.

18.4 If reasonably requested by the Client, the Tram Supplier shall make available to the Client, personnel of appropriate competence, expertise and qualifications (employed either by the Tram Supplier or any relevant Sub-contractor) for the purposes of dealing with matters referred to in this Agreement. In particular the duties of such personnel shall include but not be limited to:

18.4.1 attending meetings called in accordance with Clause 16.2; and

TIE00899939_0074

18.4.2 providing (as reasonably requested by the Client) reports, information, advice and/or assistance in relation to matters referred to in this Agreement, including prior to and/or following any such meeting.

18.5 The Tram Supplier shall until the expiry of the Extended Tram Warranty Period render to the Client, the Tram Inspector and (at the Client's direction) any other Client Party such technical assistance and advice in relation to any Tram as such parties may at any time reasonably require at no additional charge.

18.6 The Tram Supplier shall from the expiry of the Extended Tram Warranty Period until the expiry of this Agreement render to the Client and (at the Client's direction) any other Client Party such technical assistance and advice in relation to any Tram as such parties may reasonably require charged at six hundred and twenty pounds (£620) sterling per day.

18.7 Neither party shall, during the period of this Agreement, contract or retain as an adviser or consultant, any person currently or previously employed or engaged in the previous 6 months by the other Party unless the prior written approval of the other party has been obtained.

18.8 The Tram Supplier shall (and shall procure that the Key Personnel, its staff employed in the performance of the Tram Works and the Tram Supplier Parties shall) comply with all regulatory requirements appropriate to and required for the performance of the Tram Works, **tie's** Drug and Alcohol Policy and any rules, regulations and instructions from the Client's Representative.

18.9 The Tram Supplier shall not at the Depot or at any premises from where any Tram Supplier Parties carry out the Tram Works and/or any obligations under this Agreement at any time allow the consumption of, or work under, the influence of alcoholic liquors or drugs or give, sell or barter any alcoholic liquors or drugs or permit or suffer any such gift, sale or barter to be made by any Tram Supplier Party.

18.10 The Tram Supplier shall employ or cause to be employed in and about the construction and completion of the Tram Works and in the superintendence thereof only persons who are careful, skilled and experienced in their several trades and callings. The Tram Supplier shall ensure that its supervisors and operatives who are involved in carrying out the Tram Works shall have appropriate certification, if relevant to the works they are performing.

18.11 The Client's Representative shall, acting reasonably, have the right to object to and require the Tram Supplier to remove or cause to be removed from the site of the Tram Works at the Edinburgh Tram Network any person employed thereon who mis-conducts himself in the

MK

TIE00899939_0075

performance of his duties or fails to conform with any particular provisions with regard to safety which may be set out in this Agreement or persists in any conduct which is prejudicial to safety or health, and such persons shall not be again employed upon the site of the Tram Works at Edinburgh Tram Network without the permission of Client's Representative.

18.12 Any costs incurred by the Tram Supplier in removing, or causing to be removed, a person in accordance with Clauses 18.10 and 18.11 shall be borne by the Tram Supplier.

19. APPROVALS AND CONSENTS

19.1 Wherever in this Agreement the Tram Inspector is required to make any determination or to exercise his discretion by the giving of decisions, opinions or consents or to express satisfaction or approval or otherwise take any action, the Tram Inspector shall exercise such discretion fairly and reasonably within the terms of this Agreement (save where this Agreement expressly states that he is to have absolute discretion), and having regard to all the circumstances.

19.2 No act or omission of the Tram Inspector, the Client, the Client's Representative or any of the Client Parties shall, except as otherwise expressly provided in this Agreement:

19.2.1 in any way relieve or absolve the Tram Supplier from, modify, or act as a waiver of, any liability, responsibility, obligation or duty under this Agreement; or

19.2.2 in the absence of an express order or authorisation under Clause 20 (*Changes*) constitute or authorise a Client Change.

19.3 Any approval, consent or certificate given or issued by the Client or the Tram Inspector in accordance with this Agreement shall take effect in accordance with its terms, including under Clause 23 (*Mock Up*), but shall not relieve the Tram Supplier from any liability to the Client arising out of, or connected with the performance or non-performance of the Tram Supplier's obligations under this Agreement, except that the issue of an approval, consent or certificate shall constitute discharge by the Tram Supplier of its obligation to obtain such approval, consent or certificate.

19.4 Notwithstanding any other provision of this Agreement, the Tram Supplier undertakes that it shall not accept any instructions from any third party which, if implemented would cause a variation to any term of this Agreement unless:

19.4.1 the Client has in its absolute discretion given its prior written consent to such instructions; or

TIE00899939_0076

19.4.2 the acceptance of instructions is required by the provisions of any applicable Law, in which case the Tram Supplier undertakes to immediately give notice to the Client of the acceptance of such instructions.

19.5 All certificates to be issued under this Agreement shall be issued in multiple with a copy being sent by the Tram Inspector to each of the Client's Representative, **tie** and the Tram Supplier's Representative.

20. CHANGES

Client Changes

20.1 Unless expressly stated in this Agreement or as may otherwise be agreed by the Parties, Client Changes shall be dealt with in accordance with this Clause 20 (*Changes*). If the Client requires a Client Change, it must serve a Client Notice of Change on the Tram Supplier.

20.2 A Client Notice of Change shall:

20.2.1 set out the proposed Client Change in sufficient detail to enable the Tram Supplier to calculate and provide an Estimate in accordance with Clause 20.4;

20.2.2 require the Tram Supplier to provide the Client within 18 days of receipt of the Client Notice of Change with an estimate in accordance with Clauses 20.4 and 20.6 ("**Estimate**") and specify whether any competitive quotes are required; and

20.2.3 set out how the Client wishes to pay or be reimbursed (as the case may be) for the proposed Client Change.

20.3 If, on receipt of the Client Notice of Change, the Tram Supplier considers (acting reasonably) that the Estimate required is too complex to be completed and returned to the Client within 18 Business Days, then the Tram Supplier shall, within 5 Business Days of receipt of such Client Notice of Change, deliver to the Client a request for a reasonable extended period of time for return of the Estimate, such extended period to be agreed by the Parties, both acting reasonably.

20.4 As soon as reasonably practicable, and in any event within 18 Business Days after having received a Client Notice of Change (or such longer period as may have been agreed by the Parties pursuant to Clause 20.3 where extensive engineering / design work is required), the Tram Supplier shall deliver to the Client the Estimate. The Estimate shall include the opinion of the Tram Supplier (acting reasonably) on:

TIE00899939_0077

20.4.1 whether relief from compliance with any of its obligations under this Agreement is required during or as a result of the implementation of the proposed Client Change;

20.4.2 any impact on the performance of the Tram Works and changes required to be made to the Tram Requirements Specification;

20.4.3 any impact on the Tram Manufacturing and Delivery Programme, and any requirement for an extension of time;

20.4.4 any amendment required to this Agreement as a result of the implementation of the proposed Client Change,

20.4.5 the proposed method of delivery of the proposed Client Change;

20.4.6 proposals to mitigate the impact of the proposed Client Change;

20.4.7 any Consents, or changes to existing Consents, which are required as a result of the implementation of the Client Change;

20.4.8 any increase or decrease in any sums due to be paid to the Tram Supplier (including the value of any Milestone Payments and the scheduling of such Milestone Payments) as a result of the implementation of the proposed Client Change; and

20.4.9 any impact or likely impact on the performance of the Mobilisation Services or the Services under the Tram Maintenance Agreement (as those expressions are defined in the Tram Maintenance Agreement), any changes required to be made to the Tram Maintenance Programme and/or the Tram Maintenance Specification (as those expressions are defined in the Tram Maintenance Agreement) and any changes required to be made to any of the Tram Documentation.

20.5 The valuation of any Client Changes made in compliance with this Clause 20 (*Changes*) shall be added to or deducted from the sums due to be paid to the Tram Supplier as the case may be, and shall be ascertained by the Client by measurement and/or valuation based upon the value of the resources and labour employed thereon taking into account the type of work to be carried out, the location that such work is to be carried out and typical prices in the market for such labour and/or components to be used, so as to ensure that the measurement or valuation is at fair rates and/or prices.

20.6 The Tram Supplier shall use all reasonable endeavours to include in the Estimate evidence demonstrating that:

TIE00899939_0078

20.6.1 the Tram Supplier has used all reasonable endeavours to minimise (including by the use of competitive quotes where appropriate) any increase in costs and to maximise any reduction of costs;

20.6.2 the Tram Supplier has, where required by the Client and practicable, sought competitive quotes from persons other than the Tram Supplier Parties in pursuance of its obligation under Clause 20.6.1 above;

20.6.3 the Tram Supplier has investigated how to mitigate the impact of the Client Change; and

20.6.4 the proposed Client Change will, where relevant, be implemented in the most cost-effective manner, including showing, where reasonably practicable, that when any expenditure is incurred relevant Changes in Law that are foreseeable at the time of consideration of the specific Client Change and which relate to that Client Change have been taken into account by the Tram Supplier.

20.7 If the Tram Supplier does not intend to use its own resources to implement any proposed Client Change, it shall:

20.7.1 demonstrate that it is appropriate to subcontract the implementation of such Client Change; and

20.7.2 comply with Good Industry Practice with the objective of ensuring that it obtains best value for money when procuring any supplier or deliverable required in relation to the proposed Client Change.

20.8 As soon as reasonably practicable after the Client receives the Estimate, the Parties shall discuss and agree the issues set out in the Estimate. From such discussions the Client may modify the Client Notice of Change, and the Client may require the Tram Supplier to seek and evaluate competitive tenders (to the extent not already sought). In each case the Tram Supplier shall, as soon as practicable, and in any event not more than 15 Business Days after receipt of such modification, notify the Client of any consequential changes to the Estimate.

20.9 If the Parties cannot agree on the contents of the Estimate, then either Party may refer the Estimate for determination in accordance with the Dispute Resolution Procedure (unless the Client Notice of Change has already been withdrawn) provided that the Tram Supplier shall not be obliged to implement any proposed Client Change where:

TIE00899939_0079

20.9.1 the Client does not have the legal power or capacity to require the implementation of such proposed Client Change; or

20.9.2 implementation of such proposed Client Change would

20.9.2.1 be contrary to Law;

20.9.2.2 not be technically feasible;

20.9.2.3 substantially and materially increase the probability of a substantial non-compliance with this Agreement by the Tram Supplier; and/or

20.9.2.4 be outwith the specific competence of the Tram Supplier either in performing the activity required by the Client Change or in supervising a Tram Supplier Party to carry out the activity required by the Client Change.

20.10 As soon as reasonably practicable after the contents of the Estimate have been agreed or determined pursuant to the Dispute Resolution Procedure or where a Client Change has led to irrevocable withdrawal of a Consent, the Client shall:

20.10.1 issue a Client Change Order ; or

20.10.2 withdraw the Client Notice of Change in which case the Client shall pay to the Tram Supplier the reasonable costs incurred by the Tram Supplier in complying with this Clause 20 (*Changes*) in relation to that Client Notice of Change.

For the avoidance of doubt, the Tram Supplier shall not commence work until instructed through receipt of a Client Change Order.

20.11 If the Client does not issue a Client Change Order within 28 Business Days of the contents of the Estimate having been agreed or determined pursuant to Clause 20.10, then the Client Notice of Change shall be deemed to have been withdrawn.

20.12 Where the Parties cannot agree on the content of an Estimate, and it is deemed by the Client (acting reasonably) that the proposed Client Change is urgent and/or has a potential significant impact on the Tram Manufacturing and Delivery Programme, the Client shall, acting reasonably, determine a provisional Estimate and the Tram Supplier shall, subject to Clause 20.9, carry out the proposed Client Change in accordance with such provisional Estimate and a Client Change Order shall be deemed to have been served on the Tram Supplier by the Client. Either Party may refer the provisional Estimate for determination in accordance with the

TIE00899939_0080

Dispute Resolution Procedure provided that such referral shall not allow the Tram Supplier to refuse to carry out such proposed Client Change.

Restrictions on Entitlements to Relief for a Client Change

20.13 The Tram Supplier shall not be entitled to any extension of time, payment or relief in respect of any Client Change if and to the extent that the Tram Supplier is in breach of this Agreement.

20.14 If, having received instructions from the Client or the Client's Representative, the Tram Supplier considers that compliance with those instructions would amount to a Client Change, then the Tram Supplier shall comply with the instruction when it is confirmed in writing and shall within 10 Business Days of any instructions being received, notify the Client of the same, such notification to include an estimate pursuant to Clause 20.12. From the date of receipt by the Client of such Estimate, Clause 20.12 shall be deemed to apply mutatis mutandis to the work carried out by the Tram Supplier in complying with such instruction. If it is agreed by the Parties or determined pursuant to the Dispute Resolution Procedure that a Client Change would arise if the instructions were complied with (either Party being entitled to refer the matter to the Dispute Resolution Procedure if the matter has not been agreed within 10 Business Days of the estimate being received by the Client), then the Client may proceed with the instruction in accordance with this Clause 20 (*Changes*).

20.15 Any failure by the Tram Supplier to notify the Client within 10 Business Days of instructions being received that it considers that compliance with such instructions from the Client or the Client's Representative would amount to a Client Change shall constitute an acceptance by the Tram Supplier that any compliance with the Client's or the Client's Representative's instructions shall be without cost to the Client and without any entitlement to any extension of time or other relief.

20.16 Any failure by the Tram Supplier to notify the Client within 120 Business Days of becoming aware of any other matter or occurrence which could amount to a Client Change shall constitute an acceptance by the Tram Supplier that in being instructed to deal with such matter or occurrence as a Client Change, the Tram Supplier shall not be entitled to any costs, extension of time or other relief in respect of such Client Change.

TIE00899939_0081

Change Control Register

20.17 The Tram Supplier shall maintain a change control register which shall detail the status and give summary information on all withdrawn, potential and confirmed variations under this Agreement.

21. TRAM SUPPLIER CHANGES

21.1 Within 10 Business Days of the Tram Supplier becoming aware of the need or desirability for a variation to the Tram Works, the Tram Supplier shall notify the Client of the reasons for such variation and make proposals for the proposed variation in writing. The Client shall be free to accept or reject any proposed variation as the Client thinks fit, and the Client shall determine whether such proposal is dealt with in accordance with Clause 21.2 or Clause 21.3.

21.2 If the Client wishes to proceed with a variation proposed by the Tram Supplier, the Client shall serve a Client Notice of Change on the Tram Supplier and Clauses 20.2 to 20.17 shall be adhered to by the Client and the Tram Supplier provided that:

21.2.1 the Client may require that there be a reduction to the Tram Price if such change will result in lower costs for the Tram Supplier; or

21.2.2 in the event that the proposed Tram Supplier change is of benefit only to the Tram Supplier any anticipated increase to the costs of the Tram Supplier resulting from any change requested by the Tram Supplier pursuant to Clause 21.1, shall not result in a variation to the Tram Price.

21.3 If the Tram Supplier considers that a change could effect a saving of £20,000 (as Indexed) or more, the Tram Supplier shall propose such change in accordance with Clause 21.1 and the Tram Supplier's proposal shall be accompanied by a value engineering report which shall include:

21.3.1 a whole life cost analysis in respect of each element of (i) the Tram affected by the proposed change and/or (ii) any additional works proposed to be carried out in order to effect the proposed change;

21.3.2 option appraisals and reasoned arguments to demonstrate why any particular systems, equipment, materials and the like should be selected in preference to others for incorporation into the Tram Works, taking into account the operational life of the Tram; or

TIE00899939_0082

21.3.3 the Tram Supplier's proposals for the lump sum reduction to the contract price in respect of such proposal.

The Client may accept such proposal at its entire discretion and its decision in this respect shall be final and binding. If the proposed change is accepted, the reduction to the Tram Price that is anticipated as arising as a result of such change shall be shared between the Client and the Tram Supplier on a 50:50 basis and the Tram Supplier's share (50% of the cost savings) will be applied to the corresponding payment Milestone or in a financially neutral way.

22. ADDITIONAL TRAMS

22.1 The Client may, by providing the Tram Supplier with a written notice or notices, order Additional Trams with related Spare Parts and Special Tools ("**Additional Trams Order**") from the Tram Supplier on the following terms:

22.1.1 if the Client places an Additional Trams Order or Orders for a maximum total of 4 Additional Trams before 17 months have expired from the date of execution of this Agreement, then the price for such Additional Trams Order or Orders shall be as set out in Schedule 19 (*Additional Trams*);

22.1.2 if the Client places an Additional Trams Order or Orders for a maximum total of 8 Additional Trams (including any Additional Trams ordered under Clause 22.1) after 17 months have expired from the date of execution of this Agreement, then the price and indexation mechanism for such Additional Trams Order or Orders which is set out in Schedule 19 (*Additional Trams)* shall be applied.

22.2 Any necessary changes to this Agreement arising out of any Additional Trams Orders shall be agreed by the Parties (both acting reasonably and in good faith).

23. MOCK-UP

23.1 Mock-Up

23.1.1 The Tram Supplier shall prepare a mock-up of the Tram in accordance with this Clause 23 (*Mock-Up*). The Tram Supplier has a target date for completion of the mock-up as shown in part 1 of Schedule 4 (*Tram Manufacturing and Delivery Programme*), and recognises and acknowledges the need for its participation in the process of reviewing and commenting upon the mock-up to be carried out expeditiously and regularly as the design and fabrication of the mock-up proceeds. The Client and **tie** will be invited (and will be expected) to make periodic inspections

TIE00899939_0083

at the premises where the mock-up is being fabricated during construction of the mock-up and, subject to the following terms of this Clause 23 (*Mock-Up*), to make comments. Upon completion of the mock-up, the Client and **tie** shall be invited to make further inspections and meetings will be held to discuss and resolve the Client's and **tie**'s comments upon the final presentation of the mock-up, provided that no new comments shall be made after the expiry of 20 Business Days from the date upon which the Tram Supplier notifies the Client and **tie** that the mock-up is complete.

23.1.2 The mock-up shall be prepared in accordance with the requirements of section 2 of the Tram Requirements Specification. The mock-up will be used to demonstrate, subject to the provisions of this Clause 23 (*Mock Up*):

23.1.2.1 compliance with the Tram Employer's Requirements;

23.1.2.2 compliance with the Rail Vehicle Accessibility Regulations 1998 (as amended from time to time) and Railway Safety Publication 2;

23.1.2.3 cab and saloon interior and external styling, livery design and provision of advertising space;

23.1.2.4 interior layout, including:

(a) seat spacing, dimensions and design;

(b) wheelchair positions;

(c) aisle widths;

(d) window arrangement;

(e) luggage racks;

(f) hand rails;

23.1.2.5 cab interior and controls layout;

23.1.2.6 passenger information displays; and

23.1.2.7 passenger emergency communication units.

TIE00899939_0084

23.2 Client's rights to comment and approve

23.2.1 The Client's and/or **tie**'s rights to make comments upon and approve the mock-up shall be subject to the time limits set out in Clause 23.1 above, and to the following further provisions.

23.2.2 The Client and/or **tie** shall act reasonably in approving the mock-up, and shall not unreasonably disapprove any aspect of the design which is materially similar to that contained in the relevant drawings and colour renderings listed or described in Schedule 23 (*Tram Supplier's Proposals*). Without prejudice to this, the Client may not require any changes in respect of the following:

23.2.2.1 overall vehicle dimensions (length, width, height);

23.2.2.2 heating, ventilation and air conditioning air distribution system;

23.2.2.3 door sizes; and

23.2.2.4 any dimension which would change the Developed Kinematic Envelope and in particular the length of the Tram nose.

The Client and/or **tie** shall not require any changes to the Trams which will prevent or make materially more difficult compliance with the Disability Discrimination Act 1995, the Rail Vehicle Accessibility Regulations 1998 (as amended), or any other Legislation.

23.2.3 The Client and/or **tie** may require reasonable changes in respect of exterior cab styling (provided due consideration has been given to the Developed Kinematic Envelope, passenger compartment, viewing angles and the like and that such changes shall not impact upon the structural design of the Tram seating arrangement, handrail location, seat selection, interior and exterior colour schemes).

23.2.4 Notwithstanding anything else in this Clause 23.2, the Client and/or **tie** may not require changes which would materially change the intent of the Employer's Requirements unless such change is instructed as a Client Change under Clause 20 (*Changes*).

23.2.5 The approval by the Client, **tie** or the Tram Inspector of the mock-up shall not in any way relieve the Tram Supplier of any of its obligations under this Agreement.

TIE00899939_0085

23.3 Design finalisation and use of mock-up for display purposes

23.3.1 Upon such completion, the Tram Supplier shall incorporate the agreed design changes into the final design of the Tram, and shall make such changes to the mock-up as are required to reflect the agreed changes.

23.3.2 The Tram Supplier shall, provided it no longer reasonably requires the mock-up for the purposes of finalisation of the design of the Tram, make the mock-up available to **tie**, upon reasonable notice by **tie** to the Tram Supplier, for the purposes of display to the public at a venue in Edinburgh selected by **tie** and thereafter at a site to be jointly agreed and secured by the Parties.

24. AUDIT AND INSPECTION

24.1 The Tram Supplier shall supply such financial information relating to the Tram Supplier and its Affiliates as may from time to time be reasonably requested by the Client within 10 Business Days of such request.

24.2 In relation to the accounts of the Tram Supplier, and its Affiliates it declares that it is a Corporation traded on the Madrid Stock Market with which it is obliged to register and publish the accounting records (balance sheet, profit and loss account, etc) and refer financial and commercial information to the stock market from time to time abiding by the rules of the CNMV (Spanish National Commission of Stocks and Commercial Values) and the LSA (Spanish companies law). Thus, this financial information will be public and available for the Client.

24.3 The Tram Supplier shall promptly provide the Client and the Client Parties with all reasonable co-operation and assistance in relation to any inspection including without limitation:

24.3.1 providing all information reasonably required by the Client and/or the Client Parties for the purposes of its inspection;

24.3.2 providing a reasonable number of copies of any documents or records reasonably requested by, the Client and/or the Client Parties; and

24.3.3 complying with the Client's reasonable requests for access to personnel engaged in the Tram Supplier's performance of this Agreement. If the Client has justified suspicions that the Tram Supplier could enter into an Insolvency Event, a representative of the Financial Department of the Tram Supplier shall meet, when required by the Client at

TIE00899939_0086

an agreed location with the financial information that is in the Public Registered Offices in Spain and give a detailed analysis of such financial Information.

24.4 The Tram Supplier shall bear the costs of any inspection where such inspection is the consequence of or uncovers a Tram Supplier Default.

24.5 The Tram Supplier acknowledges and agrees that **tie**, CEC and certain Relevant Authorities from time to time require whether by virtue of Law, regulation or otherwise, to provide reports, returns and to carryout audits and accordingly the Tram Supplier agrees to provide assistance to the extent required by **tie**, CEC and such Relevant Authorities from time to time. Each of the parties shall bear their own costs of such information provision and/or audits.

24.6 The Client shall have the right to exercise its rights of audit and inspection set out in this Clause 24 (*Audit and Inspection*) for a period of 6 years from expiry or termination of this Agreement.

24.7 The Tram Supplier shall for at least 6 years following expiry or termination of this Agreement keep safely and in good order such technical and financial information as is necessary for the Client to carry out its rights to audit and inspect in accordance with this Clause 24 (*Audit and Inspection*).

25. QUALITY ASSURANCE

25.1 The Tram Supplier shall at all times:

25.1.1 utilise a Project Quality Assurance Programme that is compliant with EN ISO 9001:2000; and

25.1.2 comply with the Project's health and safety and environmental management requirements and policies applicable to the Edinburgh Tram Network and by Law and Legislation (as such requirements and policies are described in Schedule 2, (*Employer's Requirements)* and as may be notified by the Client to the Tram Supplier from time to time) in the performance of its obligations under this Agreement.

25.2 The Tram Supplier shall promptly rectify any non-conformities, including in the Deliverables, with the Project Quality Assurance Programme identified during the course of an assessment by the Tram Inspector or the Client or any of their appointed representatives in a timely manner.

TIE00899939_0087

25.3 Compliance with the Project Quality Assurance Programme shall not relieve the Tram Supplier from any of its other duties, obligations or liabilities under this Agreement.

25.4 The Tram Supplier shall appoint (or shall procure the appointment of) a quality manager as soon as reasonably practicable following the Effective Date. The identity of the quality manager (and any replacement) shall be subject to the approval of the Client's Representative (such approval not to be unreasonably withheld or delayed).

25.5 The quality manager shall:

25.5.1 ensure the effective operation of the quality systems under the Project Quality Assurance Programme;

25.5.2 audit the quality systems at regular intervals and report the findings to the Client's Representative;

25.5.3 review all quality systems at intervals agreed with the Client's Representative to ensure their continued suitability and effectiveness; and

25.5.4 liaise with the Client's Representative on all matters relating to quality management.

26. PROGRAMMING OF TRAM DESIGN, MANUFACTURE, DELIVERY, TESTING AND COMMISSIONING

The Tram Supplier shall:

26.1 undertake and programme all activities, so as to ensure the timeous delivery of Trams in accordance with the Tram Manufacturing and Delivery Programme;

26.2 at the end of each Reporting Period (or as otherwise agreed by the Parties), re-issue electronically (and if requested in paper format) the Tram Manufacturing and Delivery Programme to the Client's Representative showing the key activities completed to date against the original Tram Manufacturing and Delivery Programme incorporating:

26.2.1 an explanation of any failure to achieve any activities referred to in the Tram Manufacturing and Delivery Programme by the date or dates originally set and proposals setting out the steps taken or to be taken to meet, in so far as reasonably practicable, or otherwise to mitigate the adverse effects on the requirements of the Tram Manufacturing and Delivery Programme;

TIE00899939_0088

26.2.2 details of other circumstances which have or may delay manufacture or delivery of the Trams in accordance with the Tram Manufacturing and Delivery Programme and proposals setting out the steps taken or to be taken to meet, in so far as reasonably practicable, or otherwise to mitigate the adverse effects on the requirements of the Tram Manufacturing and Delivery Programme; and

26.2.3 details of any proposed changes to the Tram Manufacturing and Delivery Programme that the Tram Supplier reasonably considers necessary, such changes to be agreed, subject to Clause 27.2, in accordance with Clause 20 (*Changes*);

26.3 provide all necessary support to the Client required for the testing and commissioning of the Trams, including:

26.3.1 provision of testing managers and technicians based in Edinburgh throughout the delivery and testing of the Trams;

26.3.2 full logistic support for the despatch of urgent and routine Spare Parts required throughout the delivery and testing of the Trams;

26.3.3 provision of all documentation authors and administrative support necessary for the production and delivery to the Client of Tram Documentation.

26.3.4 promptly following request by the Client provide such further information to clarify and substantiate any information provided pursuant to Clause 26.2 and Clause 26.3; and

26.3.5 take all reasonable steps to mitigate the effects of any delay to its progress in accordance with the Tram Manufacturing and Delivery programme.

27. ACCELERATION

27.1 If for any reason which does not entitle the Tram Supplier to an extension of time, the rate of progress of the Tram Works is at any time, in the opinion of the Client's Representative, whose opinion shall be neither unreasonable nor expressed vexatiously and with the agreement of the Tram Supplier (agreement not to be unreasonably delayed or withheld), too slow to ensure substantial completion in accordance with the Tram Manufacturing and Delivery Programme, or any previously agreed revised time for completion of the Tram Works agreed under Clause 27.2, the Client's Representative shall notify the Tram Supplier in writing and the Tram Supplier shall thereupon take such steps as are necessary and to which the Client's Representative may consent to expedite the progress so as substantially to complete the Tram

TIE00899939_0089

Works in accordance with the Tram Manufacturing and Delivery Programme, such consent not to be unreasonably delayed or withheld. The Tram Supplier shall not be entitled to any additional payment for taking such steps. For the avoidance of doubt, any dispute arising out of this sub-clause is capable of referral through the Dispute Resolution Procedure.

27.2 Where the Client desires either:

27.2.1 a date for completion of certain of the Tram Supplier's obligations under this Agreement earlier than the date set out in the Tram Manufacturing and Delivery Programme current at the date of issue of the preliminary instruction under Clause 27.3; or

27.2.2 to have certain of the Tram Works completed by the relevant date set out in the Tram Manufacturing and Delivery Programme where, following delays or stoppage to programme for whatever reason, the Tram Works would not be so completed in the absence of any acceleration or re-sequencing arrangements; or

27.2.3 to obviate the necessity for, or to order the cancellation of, or a reduction in the length of, any extension of time being fixed under Clause 47 (*Relief Events);*

the Client's Representative may issue a preliminary instruction under Clause 27.3.

27.3 If the Client's Representative issues a preliminary instruction to the Tram Supplier to accelerate the carrying out or alter the sequence and timing of any work to be executed under the provisions of this Agreement, the Client's Representative shall, in such instruction set out the exact nature of the requirements of the Client with regard to the Tram Manufacturing and Delivery Programme as referred to in Clause 27.2 for which the preliminary instruction has been issued.

27.4 If the Tram Supplier makes a reasonable objection to such an instruction, the preliminary instruction shall either be withdrawn or so varied as to meet such objection and may then be re-issued by the Client's Representative.

27.5 As soon as reasonably practicable after receipt of the preliminary instruction (or after receipt of a preliminary instruction re-issued under Clause 27.4) the Tram Supplier shall inform the Client's Representative in writing in respect of the proposed instruction:

27.5.1 of the amount of any additional cost to which the Tram Supplier should be entitled as a result of compliance with the instruction when issued by the Client's Representative subject to Clause 27.3; or

TIE00899939_0090

27.5.2 that it is not reasonably practicable to state such a sum and that the cost to the Client of compliance by the Tram Supplier will therefore have to be ascertained in accordance with Clause 20 (*Changes*); and

27.5.3 of the earlier date for completion of the relevant aspect of the Tram Works and the unsequential amendment to the Tram Manufacturing and Delivery Programme; or

27.5.4 of the extent to which an extension of time that would otherwise be fixed under Clause 47 (*Relief Events*) can be cancelled or reduced and the date for completion of the relevant aspect of the Tram Works which as a result will be or become the date for completion of the activity in the Tram Manufacturing and Delivery Programme for all the purposes of this Agreement.

27.6 If on receipt of the information given to the Client's Representative under Clause 27.5 the Client wishes to pay the amount referred to in Clause 27.5.1 and to accept the new date for completion of the Tram Works stated by the Tram Supplier pursuant to Clause 27.5.3, the Client shall cause the Client's Representative to issue an instruction:

27.6.1 confirming the details of the acceleration or alteration of sequence or timing required; and

27.6.2 fixing the new date for completion of the relevant aspect of the Tram Works and the amount to which Clause 27.5.1 refers shall be included as if it were a variation.

27.7 Following any instruction under Clause 27.6 the Tram Supplier shall revise the Tram Manufacturing and Delivery Programme in accordance with the terms of Clause 26 (*Programming of Tram Design, Manufacture, Delivery, Testing and Commissioning*).

28. PRE-DELIVERY INSPECTIONS AND FACTORY ACCEPTANCE TESTS

28.1 The Tram Supplier acknowledges and agrees that **tie**, the Client and the Tram Inspector shall be involved in inspecting the Trams at various stages of the manufacturing process.

28.2 The Tram Supplier shall:

28.2.1 supply to the Client and **tie** photographs in a suitable digital format setting out each key stage of the Tram build process;

28.2.2 deliver the Trams to the delivery point designated by the Client in the Depot in accordance with the Tram Manufacturing and Delivery Programme;

TIE00899939_0091

28.2.3 notify the Tram Inspector and the Client's Representative of the expected delivery date not less than 30 days prior to such delivery date and provide the Tram Inspector and the Client's Representative with a quality control report before transporting any Tram to the Depot;

28.2.4 allow the Tram Inspector to inspect each Tram before it leaves the Tram Supplier's premises to be transported to the Depot; and

28.2.5 not transport a Tram to the Depot until the Tram Inspector has issued the Factory Acceptance Type Test Certificate and a Factory Acceptance Routine Test Certificate in respect of the Tram to be despatched and the Tram Supplier has confirmed with the Client that the Depot is ready to accept delivery of the Tram

28.3 The Tram Inspector shall inspect and the Tram Supplier shall provide all assistance requested by the Tram Inspector to enable it to so inspect:

28.3.1 each Tram before it is despatched to the Depot in accordance with the Factory Acceptance Routine Tests; and

28.3.2 specified Tram or Trams (identified in the Factory Acceptance Type Tests) before they are despatched to the Depot in accordance with the Factory Acceptance Type Tests.

28.4 The Factory Acceptance Type Test Certificate shall not be issued in respect of any Tram until all of the Factory Acceptance Type Tests have in the reasonable opinion of the Tram Inspector been satisfactorily completed.

28.5 A Factory Acceptance Routine Test Certificate shall not be issued in respect of any Tram until:

28.5.1 the Factory Acceptance Type Test Certificate has been issued; and

28.5.2 the Factory Acceptance Routine Tests in respect of that Tram have in the reasonable opinion of the Tram Inspector been satisfactorily completed.

28.6 If, in the reasonable opinion of the Tram Inspector, either the Factory Acceptance Routine Test and/or the Factory Acceptance Type Tests have not been satisfactorily completed, the Tram Inspector may issue a Tram Rejection Notice, identifying the Testing Failures and the Tram Supplier shall propose a rectification plan and period for rectification for agreement by the Tram Inspector (such agreement not to be unreasonably withheld or delayed).

TIE00899939_0092

28.7 Once the Tram Supplier has (at its own cost) rectified the failures identified in the Tram Rejection Notice in accordance with the rectification plan and within the rectification period, the Tram Supplier shall resubmit the Tram for inspection in accordance with the relevant Factory Acceptance Tests and the process set out in Clauses 28.3 to 28.7 shall continue until the Tram Inspector issues a Factory Acceptance Type Test Certificate and/or a Factory Acceptance Routine Test Certificate.

28.8 Notwithstanding any other provision of this Clause 28 (*Pre-Delivery Inspections and Factory Acceptance Tests*), once the Tram Inspector has issued a Factory Acceptance Type Test Certificate:

28.8.1 no further Factory Acceptance Type Tests shall be conducted (unless any one or more of such tests are also Factory Acceptance Routine Tests); and

28.8.2 there shall be no further requirement for the Tram Supplier to obtain a Factory Acceptance Type Test Certificate in respect of any further Tram.

29. DELIVERY

29.1 The Tram Supplier shall:

29.1.1 deliver the Trams to the point of delivery designated by the Client at the Depot;

29.1.2 use every reasonable means available to it in delivering the Trams pursuant to Clause 29.1.1, to prevent any of the roads or bridges communicating with or en route to the Depot being subjected to extraordinary traffic within the meaning of applicable legislation and specifically the Roads (Scotland) Act 1984 (as amended) by any traffic of the Tram Supplier or any Tram Supplier Party;

29.1.3 be responsible for the costs associated with the strengthening of any bridges or altering or improving any road communicating with or on route to the Depot to facilitate the movement and delivery of the Trams to the Depot;

29.1.4 be solely responsible for unloading the Trams at the point of delivery;

29.1.5 indemnify the Client and keep the Client indemnified against any and all Losses suffered or incurred by the Client arising out of or in connection with the movement and delivery of the Trams to the Depot, the unloading, loading or other removal or storage of that Tram at the point of delivery; and

29.1.6 be responsible for obtaining such export and import licences and other consents in relation to the Trams as are from time to time required and, if required by the Client will make those licences and consents available to the Client prior to the relevant shipment.

29.1.7 if, notwithstanding Clause 29.1.2, any damage occurs to any bridge or road communicating with or on the route to the Depot arising from the transport of the Trams, notify the Client's Representative as soon as the Tram Supplier becomes aware of such damage or as soon as the Tram Supplier receives any claim from the authority entitled to make such claim. For the avoidance of doubt, the Client shall not be liable for any costs charges or expenses in respect thereof in relation thereto.

29.2 In relation to all Tram delivery dates set out in the Tram Manufacturing and Delivery Programme, time shall be of the essence (save in circumstances where an extension of time is granted pursuant to the express terms of this Agreement).

30. TRAM DELIVERY TESTS AND CERTIFICATION

30.1 Tram Delivery Tests shall be conducted by the Tram Supplier on all Trams on delivery (or as soon as reasonably practicable thereafter) to the Depot and witnessed by the Tram Inspector.

30.2 The Certificate of Tram Delivery in respect of any Tram shall not be issued before:

30.2.1 all Tram Documentation has been received in accordance with the Tram Documentation Delivery Programme;

30.2.2 all of the Tram Delivery Tests in respect of that Tram have been satisfactorily completed;

30.2.3 the Tram Inspector is satisfied that the Tram conforms with the Tram Requirements Specification and all other requirements of this Agreement; and

30.2.4 in respect of the twenty seventh Certificate of Tram Delivery only, the Reliability Bond has been put in place in accordance with Clause 44 (*Bonds and Collateral Warranty*);

(together, the "**Tram Delivery Requirements**").

30.3 If the Tram fails to meet the Tram Delivery Requirements then the Tram Inspector shall issue a Tram Rejection Notice, identifying the Testing Failures and the Tram Supplier shall propose a rectification plan and period for rectification for agreement by the Tram Inspector (such

TIE00899939_0094

agreement not to be unreasonably withheld or delayed). Once the Tram Supplier has rectified the failures identified in the Tram Rejection Notice in accordance with the rectification plan and within the rectification period, the Tram Supplier shall resubmit the Tram to be tested in accordance with the Tram Delivery Tests and the process set out in this Clause 30 (*Tram Delivery Tests and Certification*) shall be repeated until the Tram Inspector issues a Certificate of Tram Delivery in respect of the rejected Tram.

30.4 The Tram Inspector shall have the right to require the Tram Supplier to repeat any Tram Delivery Test if:

30.4.1 the Tram Supplier has been unable to provide to the Tram Inspector such written evidence, details or other information as the Tram Inspector may reasonably require to evidence that the Tram Delivery Tests have been properly conducted and that the conditions for the issue of a Certificate of Tram Delivery set out in this Clause 30 (*Tram Delivery Tests and Certification*) are satisfied; or

30.4.2 the Tram Inspector is not reasonably satisfied that:

30.4.2.1 any part of the Tram Delivery Test has been or is being conducted properly; or

30.4.2.2 following any part of the Tram Delivery Test having been conducted, a Tram, in any respect, satisfies the conditions for the issue of such a Certificate of Tram Delivery.

31. TRAINING, COMMISSIONING, TESTING AND CERTIFICATION

31.1 The Tram Supplier, the Client, **tie** and the Operator shall within 12 months of the Commencement Date (each party acting reasonably and in good faith) agree the Training Programme and the detailed implementation of the Training Programme. The Tram Supplier shall implement the Training Programme in accordance with this Clause 31 (*Training, Commissioning, Testing and Certification*) and the terms of the Training Programme.

31.2 The Tram Supplier acknowledges that **tie** shall procure that on the date falling no later than two weeks prior to the date on which the first Tram is scheduled for delivery the Operator shall provide 4 drivers (in each case appropriately qualified) ready to commence the Training Programme and once trained participate in the Tram Delivery Tests and Tram Commissioning Tests. The Tram Supplier further acknowledges that **tie** shall procure that on the date on which the first Tram has been issued with a Certificate of Tram Delivery there are a further 2 drivers and 10 maintenance staff (in each case appropriately qualified) ready to commence the

TIE00899939_0095

Training Programme and, if required, once trained participate in the Tram Delivery Tests and Tram Commissioning Tests.

31.3 The Client shall procure that, for the purposes of the Tram Commissioning Tests the following are made available to the Tram Supplier:

31.3.1 the Depot (to the extent necessary for the Tram Commissioning Tests); and

31.3.2 the Test Track, power supplies and other facilities, as required to meet the Tram Manufacturing and Delivery Programme;

31.4 The Tram Supplier acknowledges that **tie** shall procure reasonable assistance from the Operator in relation to the provision of operational staff, including drivers, (subject to appropriate training by the Tram Supplier pursuant to Clause 31.2);

31.5 The Tram Supplier and the Client shall, and the Client shall procure that all other relevant Client Parties shall, observe all reasonable requirements of the Operator (as may be notified in writing by **tie** to the Client) during the carrying out of the Tram Commissioning Tests, to use reasonable endeavours to:

31.5.1 preserve health and safety;

31.5.2 protect the Trams against damage; and

31.5.3 avoid unnecessary disruption to the Operator's operations;

31.6 The Tram Supplier shall make available throughout the Tram Commissioning Tests qualified staff to:

31.6.1 conduct, supervise and record the results of all the Tram Commissioning Tests; and

31.6.2 respond to all reasonable enquiries about the condition or performance of the Trams and the major systems, sections, apparatus, equipment, components, internal seating, fixtures and fittings and devices, system configuration, modification status and software version control including all structural, electrical, hydraulic and other major components and assemblies and to rectify any failures of the same;

31.7 Subject to the provision by the Client and **tie** of the requisite operational facilities and staff:

31.7.1 the Tram Supplier shall conduct the Site Commissioning Type Tests and the Client shall conduct the System Integration Type Tests on the first Tram; and

MR

TIE00899939_0096

31.7.2 the Tram Supplier shall conduct the Site Commissioning Routine Tests and the Client shall conduct the System Integration Routine Tests on every Tram.

31.8 Subject to Clause 31.12, the Certificate of Tram Commissioning in respect of a Tram shall not be issued before:

31.8.1 all Tram Documentation has been received in accordance with the Tram Documentation Delivery Programme;

31.8.2 all of the Tram Commissioning Routine Tests in respect of that Tram have been satisfactorily completed; and

31.8.3 the Tram Inspector is satisfied that the Tram is in accordance with the terms of the Tram Requirements Specification and all other requirements of this Agreement,

(together the "**Tram Commissioning Requirements**").

31.9 The Tram Inspector shall issue a certificate ("**Tram Commissioning Type Test Certificate**") when the specified number of Trams (identified in the Tram Commissioning Type Tests) in the reasonable opinion of the Tram Inspector have completed and passed the Tram commissioning type tests ("**Tram Commissioning Type Tests**") as detailed in section 23 of the Tram Employer's Requirements. Notwithstanding any other provisions of this Clause 31 (*Training, Commissioning, Testing and Certification*) no Certificate of Tram Commissioning shall be issued in respect of any Tram until the Tram Supplier has been issued with a Tram Commissioning Type Test Certificate.

31.10 If a Tram does not meet the Tram Commissioning Requirements to the reasonable satisfaction of the Tram Inspector then the Tram Inspector may issue a Tram Rejection Notice, identifying the Testing Failures and the Tram Supplier shall propose a rectification plan and period for rectification for agreement by the Tram Inspector (such agreement not to be unreasonably withheld or delayed). Once the Tram Supplier has (at its own cost) rectified the failures identified in the Tram Rejection Notice in accordance with the rectification plan and within the rectification period, the Tram Supplier shall resubmit the Tram to be commissioned in accordance with the relevant Tram Commissioning Routine Tests and/or Tram Commissioning Type Tests and the process set out in this Clause 31 (*Training, Commissioning, Testing and Certification*) shall be repeated until the Tram Inspector issues a Certificate of Tram Commissioning.

31.11 The Tram Inspector shall have the right to require the Tram Supplier to repeat any Routine Test and/or Type Test if:

TIE00899939_0097

31.11.1 the Tram Supplier has been unable to provide to the Tram Inspector such written evidence, details or other information as the Tram Inspector may reasonably require to evidence that the Tram Commissioning Routine Tests and/or Tram Commissioning Type Tests have been properly conducted and that the conditions for the issue of a Certificate of Tram Commissioning set out in this Clause 31 (*Training, Commissioning, Testing and Certification*) are satisfied; or

31.11.2 the Tram Inspector is not reasonably satisfied that:

31.11.2.1 any part of the Tram Commissioning Routine Test and/or Tram Commissioning Type Test has been or is being conducted properly; or

31.11.2.2 following any part of the Tram Commissioning Routine Test and/or Tram Commissioning Type Test having been conducted, a Tram, in any respect, satisfies the conditions for the issue of such a Certificate of Tram Commissioning.

31.12 Notwithstanding any other provision of this Clause 31 (*Training, Commissioning, Testing and Certification*) once the Tram Supplier has been issued with a Tram Commissioning Type Test Certificate no further Tram Commissioning Type Tests shall be conducted (unless any one or more of such Tram Commissioning Type Tests are also Tram Commissioning Routine Tests);

31.13 Following the issue of the first Certificate of Tram Commissioning, the Tram issued with such a certificate shall be weighed in accordance with part 2 of Schedule 5 (*Payments*).

31A. TRAM PAYMENT MILESTONE CERTIFICATION AND APPROVAL

31A.1 Milestones Payments are detailed in the Milestone Payment Schedule in part 1 of Schedule 5 (*Payments*) of this Agreement and:

(a) the scheduling of those associated with the physical works is shown in the Tram Manufacturing and Delivery Programme in part 1 of Schedule 4 (*Programme*).

(b) the scheduling of those associated with documentation delivery is shown in the Tram Documentation Delivery Programme in part 5 of Schedule 4 (*Programme*).

(c) the scheduling of those associated with training delivery is shown in the Tram Manufacturing and Delivery Programme in part 1 of Schedule 4 (*Programme*).

(d) the scheduling of those associated with system acceptance testing is shown in the Client's Programme; and

TIE00899939_0098

(e) the scheduling of those associated with depot equipment is shown in part 1 of Schedule 5 (*Payment*).

31A.2 The initial Milestone is associated with contract award and is deemed to have been achieved, and therefore application for payment due, upon the Effective Date.

31A.3 Milestones 1, 3, 4, 10 and 66 as set out in part 5 of Schedule 4 (*Programme*) of the Tram Supply Agreement will be approved by the Tram Inspector when the activities referred to are complete in accordance with the Tram Documentation Delivery Programme in part 5 of Schedule 4 and with the requirements of this Agreement. Such approval in writing shall evidence the achievement of each relevant Milestone.

31A.4 Milestones 2, 5, 6, 7, 8, 65 and 67 as set out in part 1 of Schedule 4 (*Programme*)of the Tram Supply Agreement will be approved by the Tram Inspector when the activities referred to are complete in accordance with the Tram Manufacturing and Delivery Programme in part 1 of Schedule 4 (*Programme*) and requirements of this Agreement. Such approval in writing shall evidence the achievement of each Milestone.

31A.5 The process for certification of Tram delivery and Tram commissioning and testing is as set out in Clause 30 (*Tram Delivery Tests and Certification)* which relates to Milestones Payments 9 and 11 to 64 inclusive. The issue of a Certificate of Tram Delivery and issue of a Certificate of Tram Commissioning by the Tram Inspector shall evidence the achievement of each relevant Milestone.

31A.6 Milestones 68 and 69 as set out in part 1 of Schedule 5 (*Payment*) of the Tram Supply Agreement will be approved by the Tram Inspector when the activities referred to are complete in accordance with the Tram Manufacturing and Delivery Programme in part 1 of Schedule 4 (*Programme*)and requirements of this Agreement. Such approval in writing shall evidence the achievement of each relevant Milestone.

31A.7 Milestone 70 relates to T1, for Section D (as defined in the Infraco Contract) of the Infraco Works in accordance with section 23 of the Employer's Requirements and in this regard; the Client shall provide the Tram Supplier with a copy of the written approval of successful completion of T1 issued by **tie** to the Client within 2 Business Days of its issue date. This document shall be deemed to be certification of the achievement of this Milestone.

31A.8 Milestone 71 relates to T2 (as defined in the Infraco Contract), for Phase 1a of the Edinburgh Tram Network, in accordance with section 23 of the Employer's Requirements and in this regard; the Client shall provide the Tram Supplier with a copy of the written approval of

TIE00899939_0099

successful completion of Test T2 issued by **tie** to the Client within 2 Business Days of its issue date. This document shall be deemed to be certification of the achievement of this milestone.

31A.9 Milestone 72 relates to T3 (as defined in the Infraco Contract), for Phase 1a of the Edinburgh Tram Network, in accordance with section 23 of the Employer's Requirements and in this regard; the Client shall provide the Tram Supplier with a copy of the written approval of successful completion of T3 issued by **tie** to the Client within 2 Business Days of its issue date. This document shall be deemed to be certification of the achievement of this Milestone.

31A.10 In the event that the Client fails to transmit **tie's** approval within 2 Business Days, as required by Clause 31A.7 through Clause 31A.9, the certification of the achievement of the Milestone shall be deemed to be the date of **tie's** approval of the System Acceptance Tests T1, T2 and/or T3 as appropriate (T1, T2 and T3 shall have the meaning as defined in the Infraco Contract).

32. REPEATED TESTING AND COMMISSIONING FAILURES

32.1 If at any time four or more Trams have been issued with a Tram Rejection Notice then, unless the Tram Supplier can demonstrate to the reasonable satisfaction of the Client that the causes of such notices have been rectified, the Client may issue a written notice to the Tram Supplier setting out the fact that four or more Trams have been issued with a Tram Rejection Notice and requesting that the Tram Supplier submits a remedy plan in relation to such failure ("**Repeated Failure Notice**") and until such remedy plan is implemented in accordance with this Clause 32 (*Repeated Testing and Commissioning Failures*):

32.1.1 the Tram Inspector shall not issue any further Certificates of Tram Commissioning;

32.1.2 notwithstanding any other provision of this Agreement, the Client shall not be under any obligation to pay any sums due to the Tram Supplier in relation to which:

32.1.2.1 an invoice has been raised but not yet paid; or

32.1.2.2 the Tram Supplier subsequently raises an invoice;

32.1.3 the Client shall not be under any obligation to accept delivery of further Trams and the Tram Supplier shall pay Liquidated Damages where applicable in accordance with Clause 41 (*Liability, Indemnities, Retention and Liquidated Damages*).

32.2 Upon receipt of a Repeated Failure Notice, the Tram Supplier shall promptly propose a remedy plan for agreement by the Tram Inspector, the Client's Representative and **tie's**

TIE00899939_0100

Representative (such agreement not to be unreasonably withheld or delayed) ("**Repeated Failure Remedy Plan**").

32.3 If the Tram Inspector, the Client's Representative and **tie's** Representative agree the Repeated Failure Remedy Plan, the Tram Supplier shall promptly implement, at its own cost and expense, the Repeated Failure Remedy Plan. Provided that the Repeated Failure Remedy Plan has been implemented to the reasonable satisfaction of the Tram Inspector, the Client's Representative and **tie's** Representative:

32.3.1 the Client shall accept delivery of those Trams awaiting to be dispatched to the Depot subject to Clause 28 (*Pre-Delivery Inspections and Factory Acceptance Tests*) and in accordance with Clause 29 (*Delivery*),

32.3.2 the Client shall within 30 days pay all sums due to the Tram Supplier in respect of those invoices raised before the date of the Repeated Failure Notice (save for invoices which are the subject of genuine dispute other than pursuant to Clause 32.1.2); and

32.3.3 the Tram Inspector shall issue a Certificate of Tram Commissioning in respect of those Trams which have passed the relevant tests as a result of the Tram Supplier implementing the Repeated Failure Remedy Plan.

32.4 If the Tram Inspector, the Client's Representative and **tie's** Representative do not agree the Repeated Failure Remedy Plan, the provisions of Clauses 32.1.1 to 32.1.3 shall continue to apply until the date on which an alternative remedy plan is agreed by the Tram Inspector, the Client's Representative and **tie's** Representative (such agreement not to be unreasonably withheld or delayed) and successfully implemented by the Tram Supplier to the reasonable satisfaction of the Tram Inspector, the Client's Representative and **tie's** Representative whereupon the provisions of Clause 32.3 shall apply.

32.5 If the Tram Supplier fails to implement any agreed Repeated Failure Remedy Plan in accordance with its terms then the provisions of Clauses 32.1.1 to 32.1.3 shall continue to apply until the date on which the Tram Supplier implements such Repeated Failure Remedy Plan to the reasonable satisfaction of the Tram Inspector, the Client's Representative and **tie's** Representative whereupon the provisions of Clause 32.3 shall apply

32.6 The Tram Supplier shall not be entitled to any extensions of time to comply with any Milestone or Agreed Delivery Date, as a result of the occurrence of a failure in accordance with this Clause 32 (*Repeated Testing and Commissioning Failures*).

TIE00899939_0101

32.7 Any disputes which arise between the Tram Supplier and the Client's Representative shall be resolved in accordance with the Dispute Resolution Procedure.

32.8 The Client Representative, if requested by the Client, **tie** and any **tie** Party shall be entitled to attend and witness the carrying out of inspections and tests to be performed by the Tram Inspector pursuant to Clauses 28 (*Pre-Delivery Inspections and Factory Acceptance Tests*) to 32 (*Repeated Testing and Commissioning Failures*) (inclusive).

33. TRAM DOCUMENTATION

33.1 The Tram Supplier shall provide to the Client the Tram Documentation in accordance with the Tram Documentation Delivery Programme. The Tram Documentation shall be subject to approval by the Client.

33.2 The Tram Supplier shall until the expiry of the last of:

33.2.1 the Primary Tram Warranty Period in respect of all aspects of the Trams which are not Paint or Finishes or Extended Tram Warranty Parts;

33.2.2 the Paint and Finish Warranty Period in respect of the Paint and Finishes; and

33.2.3 the Extended Tram Warranty Period in respect of the Extended Tram Warranty Parts,

keep the Tram Documentation (held on all media on which such Tram Documentation has been supplied to the Client) current and up to date with (and shall promptly inform the Client of) any changes due to alterations to the Trams made, or authorised, by the Tram Supplier, availability of parts and components, identified faults in existing procedures or other relevant circumstances covered under the relevant warranty provided that the Tram Supplier shall in respect of a defect first identified during any Warranty Period, update the Tram Documentation upon a solution being found notwithstanding that the relevant Warranty Period may have elapsed. If an Identified Defect is notified to the Tram Supplier under a Warranty and is repaired by the Tram Supplier under Warranty, the Tram Supplier shall, as part of the repair process, update the Tram Documentation in relation to the Identified Defect repaired. The Tram Supplier shall update the Tram Documentation upon any changes introduced by the Tram Supplier, which arise as a result of an Client Change or which result from a Change in Law.

33.3 Without prejudice to Clause 33.2, the Tram Supplier shall as soon as reasonably practicable and in any event within 28 days of the occurrence of any relevant event referred to in this

TIE00899939_0102

Clause 33.3, update the Tram Documentation (held on all media on which such Tram Documentation has been supplied to the Client):

33.3.1 if the Tram Requirements Specification is amended after a Certificate of Tram Commissioning is issued in respect of a Tram;

33.3.2 in the event that at any time during the term of this Agreement there are product wide changes to the Trams and for the purposes of this Clause 33.3.2, "product wide changes" shall mean changes made to a Tram or a component or part of a Tram as a result of a modification to a tram, component or part of a tram by the Tram Supplier that has been applied to the Trams; or

33.3.3 where reasonably requested by the Client:

33.3.3.1 during the period from the date on which the first Tram delivered is issued with a Certificate of Tram Commissioning until the date on which the last Tram to be issued with a Certificate of Tram Commissioning is issued with a Certificate of Tram Commissioning; and

33.3.3.2 once the last Tram to be issued with a Certificate of Tram Commissioning is issued with a Certificate of Tram Commissioning, during a period of no more than 9 months from the date on which such Certificate of Tram Commissioning is issued.

33.4 The Tram Supplier shall ensure that the Tram Documentation shall:

33.4.1 be complete and of good legible quality, in the English language;

33.4.2 contain all necessary drawings and all drawings shall set out:

33.4.2.1 equipment title;

33.4.2.2 unique document number;

33.4.2.3 number of pages;

33.4.2.4 revision number, date of revision and content of any revision (where applicable);

33.4.2.5 originator, checker and authorised signature; and

33.4.2.6 (where larger than A3 size) be capable of being photo reduced to A3 size

TIE00899939_0103

without loss of clarity; and

33.4.3 wherever practicable, be provided both in hard copy and electronic media and all electronic media shall:

33.4.3.1 be provided in suitable Microsoft Office or Adobe Acrobat format (which shall, for the avoidance of doubt, be easily printable and electronically copiable); and

33.4.3.2 shall be delivered virus checked in accordance with Good Industry Practice.

33.5 Such of the Tram Documentation, including that Tram Documentation referred to in Clause 33.3, that relates exclusively to Software shall, as soon as reasonably practicable and in any event within 25 Business Days of the Software having been updated, be deposited by the Tram Supplier as escrow material in accordance with the Escrow Agreement. The Client shall have equivalent access rights to the material as to the Tram Documentation save only that the Client shall only have access to said escrow material in the circumstances set out in the Escrow Agreement.

34. SPARES AND SPECIAL TOOLS

34.1 The Tram Supplier shall deliver to the Client on or before the Tram Maintenance Commencement Date at the Depot:

34.1.1 the Spare Parts set out in part 4 of Schedule 2 (*Employer's Requirements*); and

34.1.2 the Special Tools set out in part 5 of Schedule 2 (*Employer's Requirements*).

34.2 The Tram Supplier shall provide to the Client as soon as reasonably practicable and in any event within 12 months of the Commencement Date a list of all first tier Sub-contractors used by or intended to be used by it to obtain, manufacture and supply Spare Parts and Special Tools. The extent of first tier Sub-contractors shall be agreed by the Client and the Tram Supplier and in reaching such agreement, the Client shall be entitled to ask the Tram Supplier for details of those Sub-contractors who are not listed.

34.3 For a period of 30 years following the Tram Maintenance Commencement Date the Tram Supplier shall (at the price and within the delivery timescales set out for each Special Tool or Spare Part in Parts 4 and 5 (respectively) of Schedule 2 (*Employer's Requirements*)) continue to make available to the Client, **tie** and/or the Tram Maintainer, Spare Parts and Special Tools as may reasonably be required to operate the Trams and maintain them.

TIE00899939_0104

34.4 If the Tram Supplier cannot provide a Spare Part and/or a Special Tool at the price or within the delivery timescale specified then the Client, and/or **tie** (or the Tram Maintainer acting on **tie**'s behalf) shall be entitled to use the rights granted to it pursuant to Clause 51 (*Copyright and Intellectual Property*) in relation to the relevant Spare Parts and/or Special Tools to either manufacture such Spare Part and/or Special Tool itself or appoint a third party to do so. Any dispute arising out of this Clause 34.4 shall be resolved in accordance with the Dispute Resolution Procedure.

34.5 The purchase price for the Spare Parts and Special Tools provided pursuant to Clause 34.1 shall be payable by the Client as part of the Aggregate Tram Price in accordance with the Milestone Payment Schedule. The detailed list of Spare Parts is contained in part 4 of Schedule 2 (*Employer's Requirements*), and the detailed list of Special Tools is contained in part 5 of Schedule 2 (*Employer's Requirements*).

34.6 If any Spare Part or Special Tool is reasonably considered by the Client or **tie** to be defective or otherwise fails to meet the Required Standards within two years of delivery then provided that the Client (upon becoming aware of such situation) promptly notifies the Tram Supplier in writing of that fact and either (at the cost of the Tram Supplier):

34.6.1 makes such Spare Part reasonably available for collection by the Tram Supplier; or

34.6.2 returns such Spare Part to the Tram Supplier,

the Tram Supplier shall replace or modify (as appropriate) such Spare Part or Special Tool within 30 days of the notification (or such other period as the parties may agree acting reasonably and taking into account the nature of the relevant Spare Part or Special Tool), failing which the Aggregate Tram Price shall be reduced or (if the Aggregate Tram Price has already been paid) a rebate payment made within 10 days thereafter of an amount equal to the value of such Spare Part or Special Tool.

35. RISK AND TITLE

35.1 The Tram Supplier shall supply each Tram and the Tram Related Equipment free from all Security Interests and third party rights of any nature.

35.2 The Trams supplied pursuant to this Agreement shall become the property of CEC and legal ownership shall automatically vest in CEC when:

TIE00899939_0105

35.2.1 a Certificate of Tram Commissioning has been issued pursuant to this Agreement and in any event within twenty four hours of the successful completion of the Tram Commissioning Test; or

35.2.2 by exception on an individual Tram basis, at the sole discretion of the Client and formalised in writing when a Tram is complete and a Factory Acceptance Test Certificate has been issued pursuant to Clause 28 (*Pre-Delivery Inspections and Factory Acceptance Tests*);

35.2.3 in relation to each item of the Tram Related Equipment delivered to CEC, on the later of delivery of each item of the Tram Related Equipment to CEC and the Certificate of Tram Commissioning being issued in respect of the first Tram;

35.2.4 where pursuant to Clause 35.2.2 prior to delivery, the property in any Tram passes to CEC, the Tram Supplier shall set the Tram aside and mark it as CEC property in a manner which is effective under Spanish law to identify CEC legal ownership.

35.3 The Tram Supplier shall permit the Client and **tie** at any time upon reasonable notice to inspect any Tram which has become the property of CEC and shall grant the Client and **tie** access for such purpose to the Tram Supplier's premises or procure the grant to the Client and **tie** of access for such purpose to any other premises where the Tram may be located.

35.4 In relation to all Trams in which legal title has vested in CEC under this Clause legal title shall be in the possession of the Tram Supplier solely for the purposes of performing its obligations following delivery (or completed manufacture) pursuant to this Agreement and shall not be within the ownership or the disposition of the Tram Supplier for any other purpose. Notwithstanding the foregoing, the Tram Supplier shall remain liable, as prescribed by this Agreement, except for theft, vandalism, collision or other damage arising outwith the Tram Supplier's control (while in use on the Edinburgh Tram Network), for the safekeeping of and the risk of loss, damage or theft of each Tram until the relevant final Certificate of Tram Commissioning has been issued pursuant to Clause 31 (*Training, Commissioning, Testing And Certification*) and likewise in the case of each item of the Tram Related Equipment.

35.5 No Interim Certificate issued by the Client shall prejudice its right to reject any Tram which is not in accordance with this Agreement. Upon any such rejection, the legal title in the rejected Tram (and the risk of loss, damage or theft) shall immediately revert to the Tram Supplier.

TIE00899939_0106

35.6 The Tram Supplier shall be responsible for each Tram completely manufactured or in the course of manufacture and for all Tram Related Equipment until such time as risk in the Trams and the Tram Related Equipment passes to CEC in accordance with Clause 35.4.

35.7 The Tram Supplier shall promptly replace any Tram or any part, component or material incorporated in or to be used in connection with such Tram or any Tram Related Equipment, which are lost, damaged or destroyed by whatever cause, prior to the time when risk passes to CEC in accordance with Clause 35.2.

35.8 Any materials, goods, and equipment intended to form part of the completed Trams and all Tram Related Equipment which are at any time removed, such removal to be with the written consent of the Client (such consent not to be unreasonably withheld), from the Trams or the Depot will remain the property of CEC and the Tram Supplier undertakes (and shall procure that the Tram Supplier Parties so undertake) to the extent reasonably practicable, to clearly identify such materials, goods, equipment and all Tram Related Equipment as belonging to CEC and to keep all such Parts or Tram Related Equipment stored separately from any third party's property. The location of all such Parts shall be tracked in an asset management system at all times.

35.9 To the extent reasonably practicable, the Tram Supplier shall at its own expense label or otherwise clearly identify with a unique traceable coding system at all times as being the property of CEC (effective under Spanish law) any materials, goods, and equipment forming or intended to form part of the completed Trams and all Tram Related Equipment in the Tram Supplier's or any Tram Supplier Party's possession or control in relation to which advance payment has been made and/or title has vested in CEC pursuant to this Agreement or otherwise and the Tram Supplier shall ensure that such items shall at all times in the Tram Supplier's (or any Tram Supplier Party's) possession or control be kept separate from the Tram Supplier's or any third party's goods.

36. WARRANTY REGIME

36.1 Subject to the provisions of this Clause 36 (*Warranty Regime*), the Tram Supplier warrants that:

36.1.1 each Tram shall be free from Tram Defects during the Primary Tram Warranty Period;

36.1.2 all Paint and Finishes shall be free from Paint and Finish Defects during the Paint and Finish Warranty Period;

TIE00899939_0107

36.1.3 all Extended Tram Warranty Parts shall be free from Extended Tram Warranty Defects during the Extended Tram Warranty Period; and

36.1.4 the fleet of Trams shall be free from Fleet Tram Defects during the Fleet Tram Defect Period,

each a "**Warranty**" and together the "**Warranties**".

36.2 If the Client claims that there is a Tram Defect, an Extended Tram Warranty Defect, a Paint and Finish Defect and/or a Fleet Tram Defect:

36.2.1 the Client:

36.2.1.1 shall, subject to Clause 36.2.1.3 promptly send to the Tram Supplier a notice ("**Defect Notice**") detailing and identifying:

(a) the type of defect as a Tram Defect, a Fleet Tram Defect, a Paint and Finish Defect and/or an Extended Tram Warranty Defect (each an "**Identified Defect**" and together the "**Identified Defects**"); and

(b) when it expects to make the Tram available to the Tram Supplier for rectification;

36.2.1.2 shall, if it submits a Defect Notice, provide the Tram Supplier with all records reasonably requested by the Tram Supplier in writing and which are reasonably necessary to enable the Tram Supplier to carry out its obligations under Clause 36.2.2; and

36.2.1.3 may, if the Tram Supplier does not diligently investigate and rectify the Identified Defect in accordance with Clause 36.2.2, carry out the rectification work or appoint a suitably qualified and insured third party to carry out the rectification work (including giving such warranty as is appropriate without prejudice to the continuation of any Warranty) and without prejudice to its other rights and remedies recover its reasonable costs of so doing from the Tram Supplier; and

36.2.2 upon the delivery of the Defect Notice, the Tram Supplier shall:

36.2.2.1 promptly, diligently and carefully investigate and search for the cause of the Identified Defect;

TIE00899939_0108

36.2.2.2 immediately notify the Client and the Tram Supplier where it appears to the Tram Supplier that the Tram is unlikely to be available for a period of more than four hours;

36.2.2.3 subject to Clause 36.4, promptly propose a rectification plan ("**Rectification Plan**") and a rectification period ("**Rectification Period**") (which may be extended by agreement of the parties) to be approved by the Client (such approval not to be unreasonably withheld or delayed); and

36.2.2.4 in accordance with the approved Rectification Plan:

(a) remedy the Identified Defect; and

(b) in respect of Fleet Tram Defects, execute all works of repair or rectification to ensure that the relevant Fleet Tram Defect is corrected and that such Fleet Tram Defect is not present in the Trams already delivered or to be delivered.

36.3 If the Tram Supplier fails to rectify an Identified Defect in accordance with Clause 36.2.2.3, the Client may itself carry out the rectification work or appoint a third party to carry out the rectification work and without prejudice to its other rights and remedies under this Agreement (including the full benefit of any Warranty under this Clause 36 (*Warranty Regime*)), recover the costs of so doing as a debt due from the Tram Supplier.

36.4 If the Client does not approve the Rectification Plan proposed by the Tram Supplier in accordance with Clause 36.2.2.3, then a Dispute shall be deemed to have occurred and the Client and the Tram Supplier shall resolve the Dispute in accordance with the Dispute Resolution Procedure, provided that before submitting to the Dispute Resolution Procedure, the Client reserves the right to appoint a qualified third party to perform or itself perform the relevant rectification work, with the party who is responsible for paying the costs of the rectification works being decided as part of the resolution of the Dispute pursuant to the Dispute Resolution Procedure.

36.5 If having rectified an Identified Defect, the Tram Supplier considers that the Client did not have the right to require it to rectify an Identified Defect under Warranty and/or it was not entitled to recover all or some of its costs incurred in rectifying an Identified Defect because:

36.5.1 the Identified Defect was in fact outside the scope of the Warranty or the Warranty Period applicable to the Identified Defect;

TIE00899939_0109

36.5.2 the Client did not comply in all material respects with the relevant obligations pursuant to Clause 36.2.1.2;

36.5.3 the Identified Defect was caused by the Tram Supplier or Operator respectively not maintaining or operating the Trams in accordance with the relevant parts of the Tram Documentation;

36.5.4 the infrastructure of the Edinburgh Tram Network not being maintained in accordance with Good Industry Practice;

36.5.5 there was a material change in the operating conditions (as specified in the Tram Requirements Specification and/or the Tram Employer's Requirements) of the Tram the subject of the Identified Defect;

36.5.6 an accident had occurred involving the Tram the subject of the Identified Defect (excluding those accidents which arise out of or in connection with the inadequacy of the training provided by the Tram Supplier and/or the inadequacy of the Tram Documentation or the occurrence of the Identified Defect);

36.5.7 the Identified Defect is caused by a clear act of vandalism; and/or

36.5.8 in relation to an Extended Tram Warranty Defect, such defect had been caused by modifications to the Extended Tram Warranty Part identified as defective which had not been approved by the Tram Supplier (excluding such modifications that were required by Law or by this Agreement and/or had been performed by the Tram Supplier or by a third party pursuant to Clauses 36.2.1.3 or 36.4),

then the Tram Supplier shall notify the Client of such reason and a Dispute shall be deemed to have occurred and the Tram Supplier and the Client shall resolve the Dispute in accordance with the Dispute Resolution Procedure.

36.6 If any part, component or system of a Tram is repaired, rebuilt or replaced under Warranty then it shall have applied to it the appropriate full Primary Warranty Tram Period, Extended Tram Warranty Period, Paint and Finish Warranty Period and/or Fleet Tram Defect Period (as appropriate to the repaired, rebuilt or replaced part, component or system).

36.7 Following the submission of a Defect Notice, if a Tram is taken out of service for rectification under Warranty pursuant to this Clause 36 (*Warranty Regime*), the Warranties given in respect of that Tram and all Warranties applicable to all relevant systems, section, parts, components, or equipment incorporated in or supplied with such Tram shall continue until:

TIE00899939_0110

36.7.1 the rectification has been completed in accordance with the approved rectification plan or has otherwise been rectified by the Client and/or its Sub-contractors;

36.7.2 any necessary consents have been obtained to enable such Tram to resume Passenger Services; and

36.7.3 the Tram has been returned to the Client for use in Passenger Services,

and thereafter for a period (in respect of each Warranty) equal to the unexpired portion of each Warranty at the date of the Defect Notice.

37. USE OF THE DEPOT

37.1 On completion of the construction of the Depot, the Tram Supplier shall enter into and execute the Depot Sub-Licence in the form set out in Schedule 3 (*Depot Sub-Licence*).

37.2 Subject to the Tram Supplier executing the Depot Sub-Licence and complying with and procuring the Tram Supplier Parties' compliance with the obligations in this Clause 37 (*Use of the Depot*) and the Depot Sub-Licence, the Tram Supplier and the Tram Supplier Parties shall have the right to access and use those parts of the Depot which the Tram Supplier and the Tram Supplier Parties properly require to so use for the purpose of carrying out the Tram Works in accordance with this Agreement.

37.3 The Tram Supplier agrees that:

37.3.1 the right to access and use the Depot granted pursuant to this Clause 37 (*Use of the Depot*) and the Depot Sub-Licence shall terminate on the earlier of the Termination Date or the Expiry Date; and

37.3.2 the Tram Supplier's and the Tram Supplier Parties' right to use such parts of the Depot shall not create any relationship of landlord and tenant.

37.4 The Client gives no warranty as to the condition or fitness for purpose of the Depot.

37.5 Subject to the exception set out in Clause 41.5, **tie** and the Client shall not be liable for the death of or injury to persons or damage to any property or for any losses, claims, demands, actions, proceedings, damages, costs or expenses or other liability incurred by the Tram Supplier and/or the Tram Supplier Parties or any person in the use of the Depot.

37.6 Nothing in this Clause 37 (*Use of the Depot*) or the Depot Sub-Licence shall restrict **tie's** and the Client's absolute right of access to any part of the Depot at any time.

TIE00899939_0111

38. PRICE AND PAYMENT

Milestone Achievement

38.1 Subject to and in accordance with the remaining provisions of this Clause 38 (*Price and Payment*), the Client shall pay the Tram Supplier each Milestone Payment following the completion of the Milestone to which it relates.

38.2 Any application for payments of sums due under this Agreement and any payment to be made shall be made in accordance with the procedure set out in this Clause 38 (*Price and Payment*).

Milestone Payments

38.3 The Tram Supplier shall submit each application for payment in respect of Milestone Payments, any other fees, costs and/or expenses in respect of Permitted Variations or as otherwise agreed in accordance with this Agreement which are being claimed by the Tram Supplier for the previous Reporting Period, to the Client's Representative within 3 Business Days following each Reporting Period End Date.

38.4 Each application for payment shall:

38.4.1 set out the Milestones completed in that Reporting Period and the Milestone Payment due in respect of the same, with evidence of satisfaction of such Milestones;

38.4.2 set out any Delivery Retentions to be made, pursuant to Clause 41.21;

38.4.3 set out any Delivery Retention Repayments to be made by the Client to the Tram Supplier, pursuant to Clause 41.23 and 41.24.3;

38.4.4 set out any other agreed adjustments pursuant to a Permitted Variation; and

38.4.5 set out any other sums due to or from the Tram Supplier under and/or arising out of this Agreement in accordance with its terms,

(together with reasonable supporting documentation establishing the basis of such sums being claimed).

38.5 The Client shall procure that the Client's Representative shall, subject to any clarifications as are in the Client's opinion (acting properly and reasonably) necessary, certify by notice in writing (an "**Interim Certificate**") to the Tram Supplier that part of the sum claimed in the application for payment which is approved by the Client and give reasons why any part of the

TIE00899939_0112

sum claimed has not been certified and the value of the sums involved no later than 10 Business Days after the date on which application for payment was received by the Client.

38.6 The Tram Supplier shall submit a VAT invoice in respect of the amount set out in the Interim Certificate to the Client within seven days of the date of the Interim Certificate. Payment will become due to the Tram Supplier on the date of receipt of the said VAT invoice by the Client and subject to Clause 38.7 the final date for payment by the Client of such valid VAT invoice shall be twenty (20) Business Days from the date of receipt of the VAT invoice by the Client.

38.7 NOT USED.

38.8 If the Tram Supplier is late in supplying a valid VAT invoice to the Client by more than three Business Days after the required timescales set out in Clause 38.6, payment in respect of any amount certified in an Interim Certificate shall become due to the Tram Supplier on the date of receipt of the relevant valid VAT invoice by the Client in respect of the late application for payment, and the final date for payment of such valid VAT invoice to be made by the Client to the Tram Supplier shall be within twenty (20) Business Days of the first date of the Reporting Period following receipt of the late valid VAT invoice.

38.9 Set-off

38.9.1 The Tram Supplier shall not be entitled to retain or set-off any amount owed to it by the Client against any amount due to the Client by it.

38.9.2 Subject to Clause 38.9.3, the Client may deduct any amount payable by the Tram Supplier to the Client whether by way of damages or in respect of any loss or expense sustained by the Client by reason of the Tram Supplier's breach of this Agreement from any other payment or payments due to be made to the Client by the Tram Supplier under this Agreement.

38.9.3 Any notice of intention to withhold payment shall be served by the Client at least five (5) Business Days prior to the final date for payment calculated in accordance with Clause 38.6 and such notice shall state the sums being withheld and the detailed reason or detailed reasons for such withholding. Where an effective notice of intention to withhold payment is given, but on the matter being referred to the Dispute Resolution Procedure, it is decided that the whole or part of the amount should be paid, the decision shall be construed as requiring payment not later than:

38.9.3.1 five (5) Business Days from the date of the decision; or

TIE00899939_0113

38.9.3.2 the date which, apart from the notice, would have been the final date for payment,

whichever is the later.

38.9.4 The Tram Supplier shall be entitled to payment of interest as provided in Clause 38.14 in respect of the relevant part of any payments which have been withheld in accordance with Clause 38.9.2 but are subsequently determined as being payable by the Client to the Tram Supplier either by agreement between the Parties or a decision following a referral to the Dispute Resolution Procedure. The interest shall be calculated for the period between the date when the relevant part of the payment should have been paid but for the notice of intention to withhold payment and the date on which payment is made by the Client in accordance with Clause 38.9.3.

38.10 The Tram Supplier and the Client acknowledge that:

38.10.1 a maximum of only one application for payment may be made under this Clause 38 (*Price and Payment*) in any Reporting Period;

38.10.2 the amount to be specified for payment in any Interim Certificate in respect of a Milestone shall not exceed the amount specified in the Milestone Payment Schedule in relation to the achievement of the Milestone to which such Interim Certificate relates; and

38.10.3 notwithstanding anything to the contrary contained in this Agreement, the Client shall not be obliged to pay any Milestone Payment earlier than the date set out in the Milestone Payment Schedule.

General

38.11 Save as otherwise expressly stated in this Agreement:

38.11.1 all payments under this Agreement to the Tram Supplier shall be made in pounds sterling by electronic transfer of funds to:

Name and Address of Bank:	CITIBANK C/ Jose Ortega y Gasset, no. 29 28006 Madrid (Spain)
Swift:	CITIESMX
IBAN:	ES19 1474 0000 1200 0693 0115

TIE00899939_0114

Account Number: 1474-0000-12-0006930115

Account Name: Construcciones Y Auxiliar de Ferrocarriles S.A. (CAF)

38.11.2 all payments under this Agreement to the Client shall be made in pounds sterling by electronic transfer of funds to:

Name and Address of Bank:

Swift:

IBAN:

Account Number:

Account Name:

38.11.3 all payments payable by (or on behalf of) the Client under this Agreement are inclusive of:

38.11.3.1 all costs and charges whatsoever in relation to the design, manufacture, delivery, testing and commissioning of the relevant Tram or Tram Related Equipment including those costs and charges relating to repeat testing or repeat commissioning resulting from a Tram Supplier failure;

38.11.3.2 all costs and charges regarding technical advice and assistance to be given relating to the design, manufacture, delivery, testing and/or commissioning of the Trams;

38.11.3.3 all training costs and charges in accordance with the Training Schedule; and

38.11.3.4 all fees and expenses payable by the Tram Supplier arising out of or in connection with the performance by the Tram Supplier of this Agreement, including all fees and expenses:

(a) of transporting and delivering Trams and Tram Related Equipment to the Depot whether from inside or outside the UK including any relevant import duties, export duties or other similar or related charges;

TIE00899939_0115

(b) incurred for or in connection with applications for or the grant of any Consent;

(c) payable to professional advisers and otherwise in connection with the review, negotiation and entering into and enforcement of this Agreement and any related agreement;

(d) incurred in relation to licence applications and renewals of any kind; and

(e) incurred in procuring and maintaining relevant insurance.

38.12 If the due date for any payment would otherwise be a day that is not a Business Day, payment shall be made on the next Business Day.

38.13 No payment made by a Party to another Party under this Agreement shall prevent the paying Party from recovering any amount overpaid or wrongfully paid by the paying Party under this Agreement (however that payment may have arisen) including those paid by mistake of law or of fact.

38.14 In the event of a failure by either party to make payment on the due date in accordance with this Clause 38 (*Price and Payment*), such party shall pay to the other party interest on such payment at a rate per annum equivalent to 2 per cent above the base rate of The Royal Bank of Scotland plc current on the date upon which such payment first becomes overdue adjusted to reflect any changes to the rate during the period over which the payment remains overdue.

38.15 Pursuant to Clause 38.14 in the event that the party to whom payment is due, suffers a demonstrable cost of the currency exchange hedge as a result of an exchange rate fluctuation between the pound sterling and the Euro, then the party due to make payment shall be liable for this amount to the party to whom the payment is due.

38.16 The Tram Supplier shall not suspend the performance of its obligations under this Agreement if any payment is overdue (but without prejudice to the Tram Supplier's rights to terminate this Agreement under Clause 57 (*Client Default Termination*)).

39. VAT

39.1 The Tram Supplier shall be deemed to have allowed in its tender for the tax payable by it as a taxable person to the Commissioners of Customs and Excise (or similar authorities in any

TIE00899939_0116

relevant jurisdiction) being tax chargeable on any taxable supplies to the Client which are to be made under this Agreement.

39.2 All certificates issued by the Client or the Client's Representative under Clause 38.5 shall be net of Value Added Tax. In addition to the payments due under such certificates the Client shall separately identify and pay to the Tram Supplier any Value Added Tax properly chargeable by the Tram Supplier on the supply to the Client of any goods and/or services by the Tram Supplier under this Agreement.

39.3 If any dispute, difference or question arises between either the Client or the Tram Supplier and the Commissioners of Customs and Excise (or similar authorities in any relevant jurisdiction) in relation to any tax chargeable or alleged to be chargeable in connection with this Agreement or the Tram Works, each shall render to the other such support and assistance as may be necessary to resolve the dispute, difference or question.

39.4 Where, under this Agreement, any amount is calculated by reference to any sum which has been or may be incurred by any person, the amount shall include any VAT in respect of that sum only to the extent that such VAT is not recoverable as input tax by that person (or a member of the same VAT group) whether by set-off or repayment.

39.5 Clause 64 (*Dispute Resolution*) shall not apply to any dispute, difference or question arising under this Clause 39 (*VAT*).

40. REQUIRED INSURANCES

40.1 The Tram Supplier shall, at its own cost, procure that each of the Required Insurances is taken out and comes into effect on the relevant date specified in each "Period of Insurance" set out in part 1 of Schedule 11 (*Required Insurances*) and shall maintain the Required Insurances in full force and effect until the relevant date specified in each "Period of Insurance" set out in part 1 of Schedule 11 (*Required Insurances*), provided that each such Required Insurance is available in the EU insurance market at commercially reasonable rates and on commercially reasonable terms to contractors of the same status as at the Effective Date and of the same discipline as the Tram Supplier.

40.2 The Tram Supplier shall procure that all Required Insurances shall:

40.2.1 be maintained in accordance with part 1 of Schedule 11 (*Required Insurances*); and

TIE00899939_0117

40.2.2 be placed at all times with insurers authorised to carry out insurance business in the United Kingdom and confirmed in writing as acceptable by the Client (such written acceptance not to be unreasonably withheld or delayed).

40.3 The Tram Supplier shall not make any material alteration to the terms of the Required Insurances (including material changes to the level of deductibles) without the Client's prior approval (which approval shall not be unreasonably withheld). If any such material alteration to the Required Insurances is made, the Tram Supplier shall complete the questionnaire set out in part 3 of Schedule 11 (*Required Insurances*), duly endorsed by its insurance broker. If the insurer makes or attempts to make any material alteration or purports to withdraw cover, the Tram Supplier shall promptly give notice of this to the Client.

40.4 The Tram Supplier shall ensure that each of its insurance brokers gives the Client as soon as reasonably practicable after any policy of Required Insurance is taken out, replaced or renewed, a letter of undertaking in the form set out in part 2 of Schedule 11 (*Required Insurances*).

40.5 The Tram Supplier shall provide satisfactory evidence to the Client that the Required Insurances have been effected. Thereafter, the Tram Supplier shall upon request produce to the Client receipts for the payment of current insurance premiums or equivalent documentary evidence to confirm that such Required Insurances are being properly maintained, and on the anniversary of the Effective Date and on each subsequent anniversary thereof until the Expiry Date or Termination Date (whichever is earlier), the Tram Supplier shall complete an insurance questionnaire set out in part 3 of Schedule 11 (*Required Insurances*) in relation to the Required Insurances to be taken out by the Tram Supplier and submit such completed questionnaire to the Client as soon as reasonably practicable. If the Tram Supplier defaults in insuring or continuing to maintain the Required Insurances, the Client may insure against any risk in respect of which such default has occurred and recover any premiums from the Tram Supplier as a debt immediately due and payable.

40.6 The Tram Supplier shall:

40.6.1 procure that the Required Insurances which are to be maintained by the Tram Supplier in accordance with part 1 of Schedule 11 (*Required Insurances*) contain a waiver of subrogation against **tie**, any **tie** Party, the Client, any Client Parties, and the insured parties as set out in part 1 of Schedule 11 (*Required Insurances*) save in respect of fraud or deliberate non-disclosure; and

TIE00899939_0118

40.6.2 where the Tram Supplier is obliged to effect any Required Insurances, not bring any claim or action against **tie** (or any **tie** Party) or the Client (or any Client Party) in respect of any Losses suffered by it in circumstances where and to the extent that the Tram Supplier could recover such Losses under such insurance (whether or not such insurance has in fact been effected or, if effected, has been vitiated as a result of any act or omission of the Tram Supplier (or any Tram Supplier Party), including non-disclosure or under-insurance), provided that, to avoid doubt, this Clause 40.6.2 shall not by itself prevent the Tram Supplier from claiming against the Client (or any Client Party) in respect of a breach of this Agreement by the Client or any Client Party for any loss or damage arising from such breach not covered because of the level of deductibles under such insurance permitted by this Agreement or to the extent such loss or damage exceeds the greater of the insurance placed or the minimum limit of indemnity required in respect of such insurance under part 1 of Schedule 11 (*Required Insurances*).

40.7 The Tram Supplier shall not take any action or fail to take any action or (insofar as it is reasonably within its power) permit or allow others to take or fail to take any action (in either case including failure to disclose any fact) as a result of which any of the Required Insurances may be rendered void, voidable, unenforceable, suspended or impaired in whole or in part or which may otherwise render any sum paid out under any relevant policy repayable in whole or in part.

40.8 The supply to the Client of any insurance policy or insurance certificate or renewal certificate or other evidence of compliance with this Clause 40 (*Required Insurances)* shall not imply, or be taken as, acceptance by the Client that:

40.8.1 the extent of insurance cover is sufficient and its terms are satisfactory; or

40.8.2 in respect of any interests or parties not insured or any risks not insured against, an acceptance by the Client that the same were uninsurable.

40.9 Neither failure to comply nor full compliance with the provisions of this Clause 40 (*Required Insurances*) shall relieve the Tram Supplier of its liabilities and obligations under this Agreement.

40.10 The Tram Supplier shall apply any proceeds of any policies of insurance maintained in accordance with part 1 of Schedule 11 (*Required Insurances*) in satisfaction of the claim, demand, proceeding or liability in respect of which such proceeds are payable (unless already paid direct to the third party or employee by the insurer).

TIE00899939_0119

40.11 The Tram Supplier undertakes with the Client in relation to the Required Insurances:

40.11.1 to comply with all requirements of the insurers; and

40.11.2 to give notice to the Client immediately upon the happening of any event which will adversely affect any policy of insurance effected in accordance with this Clause 40 (*Required Insurances*), including the downgrading of the credit rating below A- by Standard & Poors of any party providing any of the Required Insurances.

40.12 The Tram Supplier shall immediately inform the Client in writing if any of the Required Insurances cease to be maintained and/or cease to be available in the EU insurance market at commercially reasonable rates provided that if the Tram Supplier is maintaining such insurance at such rates, the Client shall undertake in writing to reimburse the Tram Supplier in respect of half of the net cost of such insurance to the Tram Supplier above commercially reasonable rates. If the Client undertakes in writing to reimburse the Tram Supplier in respect of half of the net cost of such insurance to the Tram Supplier above commercially reasonable rates or, if the Client effects such insurance at or above commercially reasonable rates, the Tram Supplier shall reimburse the Client in respect of what the net cost of such insurance to the Tram Supplier would have been at commercially reasonable rates and terms, and the cost of maintaining any such insurance at rates above commercially reasonable rates by the Tram Supplier or by the Client shall be borne in equal proportions by the Tram Supplier and the Client

40.13 The Tram Supplier shall fully co-operate with any measures reasonably required by the Client, including completing any proposals for insurance and associated documents or maintaining such insurance at rates above commercially reasonable rates if the Client undertakes in writing to reimburse the Tram Supplier in respect of the net cost of such insurance to the Tram Supplier above commercially reasonable rates or, if the Client effects such insurance at or above commercially reasonable rates, reimbursing the Client in respect of what the net cost of such insurance to the Client would have been at commercially reasonable rates and terms.

40.14 The Tram Supplier acknowledges that **tie** has taken out insurances (the "**OCIP Insurances**") and agrees to comply with the requirements of the insurers with whom the OCIP Insurances are placed. The Tram Supplier agrees that it will intimate to the Client any act, occurrence or failure which may:

40.14.1 lead to any claim being made under the OCIP Insurances; or

TIE00899939_0120

40.14.2 render any of the OCIP Insurances void, voidable, unenforceable, suspended or impaired in whole or in part or which may otherwise render any sum paid out under any relevant policy repayable in whole or in part.

40.15 The Tram Supplier shall not take any action or fail to take any reasonable action or (insofar as it is reasonably within its power) permit or allow others to take or fail to take any action (including in either case failure to disclose any fact) as a result of which any of the OCIP Insurances may be rendered void, voidable, unenforceable, suspended or impaired in whole or in part or which may otherwise render any sum paid out under any relevant policy repayable in whole or in part.

40.16 The Tram Supplier shall bear all excesses and deductibles payable in respect of claims made under the OCIP Insurances or the Additional Insurances, until the Certificate of Tram Commissioning is issued in respect of each Tram, except for acts of vandalism of Trams whilst stabled in the Depot or when being used for testing other than whilst under the responsibility of the Tram Supplier. Notwithstanding the foregoing the Tram Supplier shall not be liable for payment of any applicable deductible under the OCIP Insurances and the Additional Insurances where any claim arising is due solely to the act or omission or negligence of the Client or the Tram Supplier or where the Tram Supplier or any Tram Supplier Party is otherwise responsible for such claim in terms of this Agreement.

40.17 The Client may ask the Tram Supplier to take out and maintain any insurance from time to time in the names of the parties reasonably requested by the Client (the "**Additional Insurance**"). If Additional Insurance is required, the terms of this Clause 40 (*Required Insurances*) including the provisions which are stated to apply to the "Required Insurances" shall apply with any appropriate adjustment to be agreed between the Parties as a Client Change. The Tram Supplier shall procure that any Additional Insurance shall:

40.17.1 (if the Client so requires) contain a provision that the Client or any other party reasonably requested by the Client is named as a co-insured party;

40.17.2 provide that any Additional Insurance shall continue in effect and unaltered for the benefit of the insured parties for at least ninety days after written notice by registered mail of any cancellation (including non-renewal), change, modification or lapse for any reason;

40.17.3 contain a provision that requires the insurer to send copies of all notices of cancellation or alteration or suspension or any other notices given under or in relation

TIE00899939_0121

to the policy to the Client promptly upon receiving any notices of cancellation or alteration or suspension or any other notices;

40.17.4 contain a provision that a notice of a claim given to the insurer by one of the insured parties under the policy shall, in the absence of manifest error, be accepted by the insurer as valid notification of a claim in respect of the interests of all insured parties;

40.17.5 contain a provision to the effect (on the basis of non-vitiation/severability) that all the provisions of any Additional Insurance shall operate as if there were a separate policy in effect (save in respect of the sums insured, limits of liability and excesses/deductibles which shall be at the levels stated) for each named insured and that non-compliance with any policy term, condition or warranty and/or misrepresentation or non disclosure of material information by the Tram Supplier or any other co-insured will not affect the rights and/or interests of the Client or any other co-insured party under any policies effected as Additional Insurance; and

40.17.6 ensure that the Additional Insurances are primary, and shall not be brought into contribution with any other policy or policies effected by or on behalf of any of the insured parties;

40.18 The Tram Supplier shall supply the Client with copies of every policy document, insurance certificate and renewal certificate relating to any Additional Insurance (or such other evidence of insurances as may be reasonably required by the Client) and documentary evidence to the effect that the Required Insurances (other than any Additional Insurance) have been taken out and are being maintained as soon as it is available but in any event no later than 7 days (in respect of certificates) and sixty days (in respect of policies) after the inception of the relevant policies, together with evidence of payment of the premiums and any periodic renewal certificates.

40.19 The Tram Supplier shall inform the Client in writing as soon as reasonably practicable after it receives a claim or becomes aware of the occurrence of any event that may give rise to a claim under any Required Insurance (if related to the Edinburgh Tram Network), or Additional Insurance and will ensure that the Client is kept fully informed of subsequent action and developments concerning the claim; such written information shall not be required in relation to any claim of less than £50,000 (as Indexed). The Tram Supplier shall take such steps as are necessary or appropriate to ensure that each Tram Supplier Party, in respect of any event or claim of a like nature arising out of or relating to the operation or responsibility of that Tram Supplier Party, or any event of claim of which they become aware, takes in relation to the Tram Supplier like action to that which the Tram Supplier is required to take under this Clause

TIE00899939_0122

40.19 in relation to the Client, and shall inform the Client promptly of information thus received from any Tram Supplier Party.

40.20 At each anniversary of the Effective Date, the Tram Supplier shall provide the Client with a summary of all claims made under the Required Insurances, where such claims arise out of this Agreement. Such summary shall include date, circumstances, status and amounts paid and outstanding on each claim.

40.21 Without prejudice to any other provision of this Agreement, the Tram Supplier undertakes to the extent it has the right to do so under the relevant policy that it will not (and that each of the Tram Supplier Parties to the extent each respectively has the right to do so under the relevant policy will not) settle any OCIP Insurance or Additional Insurance claim above £50,000 (as Indexed) without the prior written agreement of the Client (such agreement not to be unreasonably withheld or delayed).

40.22 The Tram Supplier shall promptly inform the Client in writing if any of the Additional Insurances cease to be maintained and/or cease to be available in the EU insurance market at commercially reasonable rates and on commercially reasonable terms to contractors of the same status, as at the date of Client's request to the Tram Supplier that it takes out the Additional Insurance, and discipline as the Tram Supplier. In this event, the Parties shall meet to discuss the means by which any risks previously covered by the Additional Insurances should be managed, mitigated or controlled. Any agreement shall be a Client Change. Any increased or additional premium required by insurers by reason of the Tram Supplier's own claims record or other acts, omissions, matters or things particular to the Tram Supplier shall be deemed to be within commercially reasonable rates and terms.

41. LIABILITY, INDEMNITIES, RETENTION AND LIQUIDATED DAMAGES

41.1 Subject to the exception set out in Clauses 41.3, 41.4 and 41.5 the Tram Supplier shall indemnify the Client and its officers, agents and employees ("**Indemnified Parties**") from and against any and all actions, claims, (including third party claims), demands, proceedings, liabilities damages, penalties, fines, forfeitures, and the costs and expenses incident thereto (including any legal costs of defence) which any of the Indemnified Parties may hereafter incur, become responsible for, or pay out as a result of or in connection with:

41.1.1 any of the Tram Supplier's, or its employees' or any Tram Supplier Party's negligent or wilful acts or wilful omissions in the performance of the Tram Works;

41.1.2 breach of any term or provision of this Agreement;

TIE00899939_0123

41.1.3 breach of any Law; and/or

41.1.4 any non-performance or delay in performance of the Tram Supplier's obligations under this Agreement.

Such actions, claims, demands, proceedings, suits, losses, penalties, fines, forfeitures, and the costs and expenses shall include such actions, claims, demands, proceedings, suits, losses, penalties, fines, forfeitures, and the costs and expenses, in respect of:

(a) death or injury to any person;

(b) loss of or damage to any property;

(c) loss of or damage to any part of the Tram Works (including any Trams);

(d) causing the Client be in breach of any Law;

(e) causing the Client to be in breach of the Tram Inspector Agreement; or

(f) infringement or alleged infringement of a third party's Intellectual Property Rights.

41.2 Save where expressly provided for, nothing in this Agreement shall expose either Party to the application of Indirect Loss.

41.3 The exception referred to in Clause 41.1, which is the responsibility of the Client, is death of, or injury to, persons or loss of or damage to property resulting from any act, neglect, or breach of statutory duty by the Client, its agents, servants or other contractors (not being employed by the Tram Supplier or any Tram Supplier Party) or for or in respect of any claims, demands, proceedings, damages, costs, charges and expenses in respect thereof or in relation thereto.

41.4 The Tram Supplier's liability to indemnify the Client under Clause 41.1 shall be reduced in proportion to the extent that the act or neglect of the Client, its agents, servants or other contractors (not being employed by the Tram Supplier or any Sub-Contractor) may have contributed to the said death, injury, loss or damage.

41.5 Nothing in this Agreement shall exclude or limit the liability of either Party for:

41.5.1 death or personal injury caused by that Party's negligence or the negligence of anyone for whom that Party is vicariously liable;

41.5.2 fraud or fraudulent misrepresentation;

TIE00899939_0124

41.5.3 any breach of warranty given as to valid and marketable title, freedom from unduly onerous burdens and conditions of entitlement to possession by action of prescription;

41.5.4 subject to Clause 41.6, any breach of this Agreement or any delict (including negligence) or other liability arising prior to termination of this Agreement; or

41.5.5 any breach of the Warranties;

provided that nothing in this Clause 41.5 shall confer on either Party rights or remedies that they would not otherwise have.

41.6 Notwithstanding anything to the contrary contained in this Agreement and/or the Reliability Bond, the liability of the Tram Supplier under or in connection with this Agreement whether in contract or delict in negligence for breach of statutory duty or otherwise other than in respect of Clause 41.5.1, 41.5.2, and 41.5.5 shall not exceed the sum of 20% of the Aggregate Tram Price, which sum shall exclude:

41.6.1 liabilities which are or should have been covered by the proceeds of the Required Insurances, the OCIP Insurances, and/or any Additional Insurances.

41.6.2 liabilities which would have been covered by the proceeds of the Required Insurances, the OCIP Insurances and/or any Additional Insurances but for the application of any deductible under such Required Insurances, the OCIP Insurances and/or any Additional Insurances.

41.7 Notwithstanding anything to the contrary contained in this Agreement and/or the Reliability Bond and, except as detailed in Clause 41.5.1, the Client's total liability hereunder whether in contract, delict or howsoever arising shall not exceed the Aggregate Tram Price.

41.8 Subject to Clause 41.3, neither party shall be entitled to claim damages for breach of this Agreement, in delict (including negligence), breach of statutory duty or on any other basis whatsoever to the extent that such damages claimed by that Party are for Indirect Losses suffered by that Party or any of the Indemnified Parties provided that for the avoidance of doubt, nothing in this Clause 41.8 or Clause 41.2 shall affect either Party's liability to the other Party or Indemnified Party, in respect of any claim, action, proceedings or demand against such other Party or an Indemnified Party by a third party in connection with Indirect Losses suffered.

41.9 The Tram Supplier shall not be relieved or excused of any responsibility, liability or obligation under this Agreement by the appointment of any Tram Supplier Party. The Tram Supplier

TIE00899939_0125

shall, as between itself and the Client, be responsible for the selection, pricing, performance, acts, defaults, omissions, breaches, delicts and offences of any Tram Supplier Party. All references in this agreement to any act, default, omission, breach, delict or offence of the Tram Supplier shall be construed to include any such act, default, omission, breach or delict of any Tram Supplier Party.

41.10 The Tram Supplier acknowledges and agrees that the express rights provided in this Agreement in relation to termination and the calculation and payment of amounts due following such termination are exclusive and are in place of (and not cumulative with) any other rights or remedies which might arise as a consequence of such termination. The Tram Supplier hereby waives all other rights and remedies arising from such termination, whether express or implied, arising by common law (including in delict), by statute or otherwise howsoever provided that nothing in this Clause 41.10 excludes the right of the Tram Supplier to claim remedies expressly conferred on them by this Agreement.

41.11 Where the act or default of the Tram Supplier or any of the Tram Supplier Parties, causes the Client to commit an offence, the Tram Supplier shall immediately take any measure necessary to ensure that that act or default, no longer causes the Client to commit that offence.

41.12 Where the Client reasonably suspects that such an act or default is about to take place and it reasonably believes that this will result in the Client committing an offence, the Client may issue an instruction to the Tram Supplier to remedy the act or default forthwith and the Tram Supplier shall comply with the said instruction.

41.13 The Parties acknowledge and agree that the only rights available to them to terminate this Agreement are those expressly set out in this Agreement and that neither Party shall be entitled to exercise a right to terminate or rescind or accept the repudiation of this Agreement under any right whether arising in common law or statute or otherwise howsoever (other than for fraud or a fraudulent misrepresentation).

IPR Claims

41.14 Subject always to the limitations of liability in Clause 41.4, the Tram Supplier shall at all times, during and after the Tram Supply Period, on written demand indemnify the Client and keep the same indemnified against all Losses incurred by, awarded against or agreed to be paid by the Client arising from an IPR Claim provided that the Tram Supplier shall not be liable under this Clause 41.14 if such Losses and other liabilities (including legal fees) are caused by the Client Parties failing to use the IPR in accordance with Clause 51 (*Copyright and Intellectual Property*).

TIE00899939_0126

41.15 The Client agrees that:

41.15.1 it will notify the Tram Supplier in writing of any IPR Claim;

41.15.2 subject to the Tram Supplier securing the Client to its reasonable satisfaction in relation to any further claims or losses incurred thereby, it will allow the Tram Supplier to conduct all negotiations and proceedings and will provide the Tram Supplier with such reasonable assistance required by the Tram Supplier, each at the Tram Supplier's cost, regarding the IPR Claim; and

41.15.3 it will not, without prior consultation with the Tram Supplier, make an admission relating to the IPR Claim.

41.16 The Tram Supplier shall diligently consider and defend or shall procure that the IPR Claim is diligently considered and defended using competent and experienced counsel and in such a way as not to bring the reputation of the Client into disrepute. The Tram Supplier shall consult the Client's Representative regularly regarding the defence and other dealings that it has regarding the IPR Claim.

41.17 The Tram Supplier shall not settle or compromise any IPR Claim without the Client's prior written consent (not to be unreasonably withheld).

41.18 If an IPR Claim is made the Tram Supplier may, at its own expense and sole option, either:

41.18.1 procure for the Client and, where relevant, the Client Parties (without further payment or further restriction on the part of the Client or such Client Parties) the right to continue using the relevant part or parts of the Tram or Tram Related Equipment which is subject to the IPR Claim; or

41.18.2 replace or modify or procure the replacement or modification of the relevant part or parts of the Tram or Tram Related Equipment with non-infringing substitutes provided that those substitutes do not adversely affect the performance or material functionality of the same.

41.19 If the Tram Supplier has availed itself of its rights to replace or modify or procure the replacement or modification of the relevant part or parts of the Tram or Tram Related Equipment with non-infringing substitutes pursuant to Clause 41.18.2 or to procure the right to continue using the relevant part or parts of the Tram or Tram Related Equipment under Clause 41.18.1 and if such exercise of the said rights has avoided any claim, demand or action for infringement or alleged infringement, then the Tram Supplier shall have no further liability

TIE00899939_0127

thereafter in respect of the said claim, demand or action save in respect of any and all Losses, damages, costs or expenses and other liabilities (including legal fees) incurred by the Client during the period of any IPR Claim, (which costs shall be recoverable on an indemnity basis as provided in Clause 41.14).

41.20 If the Tram Supplier elects to modify the item(s) or to supply substitute item(s) pursuant to Clause 41.18.2 or to procure a licence in accordance with Clause 41.18.1, but this has not avoided or resolved the IPR Claim, the Client may (without prejudice to its other rights and remedies) terminate this Agreement by written notice with immediate effect.

Retention and Liquidated Damages for Delay

41.21 Subject to Clause 41.23, if any Tram is not delivered to the Depot by the Agreed Delivery Date for such Tram the Tram Supplier shall pay to the Client (or the Client shall be entitled to retain from payments to the Tram Supplier) a sum equal to 1% of the Tram Price payable in respect of such Tram ("**Delivery Retention**").

41.22 Subject to Clause 41.23, if:

41.22.1 the first Tram to be issued with a Certificate of Tram Commissioning is not issued with such certificate by the Agreed Commissioning Date the Tram Supplier shall pay Liquidated Damages to the Client at the rate of 1% of the Tram Price for each period of seven days (with an apportionment on a time basis for each part period) by which the issue of such Certificate of Tram Commissioning is delayed after the Agreed Commissioning Date and until such a Certificate of Tram Commissioning is issued in respect of such Tram; and

41.22.2 any other Tram to be issued with a Certificate of Tram Commissioning is not issued with such certificate by the Agreed Commissioning Date the Tram Supplier shall, in respect of each such Tram, pay Liquidated Damages to the Client at the rate of 0.5% of the Tram Price for each period of seven days (with an apportionment on a time basis for each part period) by which the issue of such Certificate of Tram Commissioning is delayed after the Agreed Commissioning Date and until such a Certificate of Tram Commissioning is issued in respect of such Tram.

41.23 If any Tram in respect of which a Delivery Retention has been made pursuant to Clause 41.21 is issued with a Certificate of Tram Commissioning on or before the Agreed Commissioning Date for such Tram then the Client shall release the Delivery Retention in respect of such

TIE00899939_0128

Tram to the Tram Supplier ("**Delivery Retention Repayment**") in accordance with Clause 38 (*Price and Payment*).

41.24 If Liquidated Damages are payable pursuant to Clause 41.21 in respect of a Tram which has had a Delivery Retention made in respect of it, then:

41.24.1 the Liquidated Damages payable in respect of such Tram shall be initially payable from the Delivery Retention until such Delivery Retention is exhausted or the full quantum of Liquidated Damages has been paid to the Client;

41.24.2 any outstanding Liquidated Damages shall remain payable by the Tram Supplier to the Client;

41.24.3 if, following the payment of Liquidated Damages in accordance with Clause 41.22.1 any of the sums retained as a Delivery Retention in respect of such Tram remains then such sum shall be repaid to the Tram Supplier as a Delivery Retention Repayment.

41.25 The aggregate amount of Liquidated Damages that the Tram Supplier shall be obliged to pay pursuant to Clause 41.21 shall be capped at 10% of the Aggregate Tram Price.

Liquidated Damages for Weight

41.26 If a Tram exceeds the Maximum Tram Weight, as calculated in accordance with part 2 of Schedule 5 (*Payments*), then the Tram Supplier shall pay liquidated damages in respect of each such Tram of an amount calculated in accordance with part 2 of Schedule 5 (*Payments*) provided that if the amount that a Tram is overweight is equal to or more than an amount equal to five per cent of the Maximum Tram Weight, the Client shall without prejudice to its other rights or remedies be entitled to reject the Tram.

General

41.27 The parties hereby acknowledge and confirm that the Liquidated Damages payable pursuant to this Agreement at the rate pre-agreed in this Clause 41 (*Liability, Indemnities, Retention and Liquidated Damages*) represent a genuine pre-estimate of the loss that is anticipated to be suffered by the Client consequent to a failure by the Tram Supplier to comply with those obligations under this Agreement to which they relate.

TIE00899939_0129

42. MAINTENANCE HANDOVER

42.1 Prior to termination or completion of the Tram Works, the Tram Supplier shall establish appropriate handover procedures with the Client and the Tram Supplier in respect of the maintenance pursuant to Clause 7.2.7.

42.2 For a minimum period of at least two years after termination or completion of the Tram Works but as long as practicable thereafter, the Tram Supplier shall provide the Client and **tie** with such access as each party may reasonably require to persons having the appropriate knowledge and experience of the Trams and associated technical matters for the following purposes:

42.2.1 general technical advice on subjects for which the Tram Supplier was responsible pursuant to this Agreement; and

42.2.2 interpretation of any maintenance history data, drawing modifications, and regulations.

42.3 Upon termination or completion of the Tram Works, the Tram Supplier shall procure that the Client is provided with (with copies to the Tram Supplier) all manuals and documentation used by the Tram Supplier in connection with the provision of maintenance pursuant to Clause 7.2.6.

43. MITIGATION

43.1 The Client and the Tram Supplier shall take all reasonable steps to minimise the adverse effects of any Relief Event, Force Majeure Event or Compensation Event (including by seeking damages from third parties or other remedies where proceedings would have a reasonable chance of success and would not be economically imprudent having regard to the likely level of damages or the nature of the remedies and the estimated cost of the proceedings) and any claim made by the Tram Supplier as a result of such event shall:

43.1.1 exclude any amounts incurred or to be incurred as a result of any failure of the party being compensated to comply with this Clause 43 (*Mitigation*); and

43.1.2 be reduced by any amount which the party being compensated will recover or has recovered under any insurance policy (or would have recovered, if it had complied with the terms of this Agreement or if it and the insurer had complied with the terms of any policy required under this Agreement).

TIE00899939_0130

44. BONDS AND COLLATERAL WARRANTY

44.1 On the Effective Date, the Tram Supplier shall provide to **tie** an Advance Payment Bond in an amount of 20% of the Aggregate Tram Price substantially in the form of part C, of Schedule 10 (*Bonds and Collateral Warranty*) and issued by a surety approved in advance by **tie**, such approval not to be unreasonably withheld or delayed.

44.2 The Tram Supplier shall procure on or before the planned delivery date for the first Tram pursuant to the Tram Manufacturing and Delivery Programme (or if earlier, before the actual delivery date of such Tram) a Performance Bond to the Client to a value of 5% of the Aggregate Tram Price which has been issued by a surety approved in advance by the Client (acting reasonably).

44.3 On the date on which the Tram Inspector certifies the twenty seventh Certificate of Tram Commissioning, the Performance Bond shall be released by the Client, and the Tram Supplier shall provide a Reliability Bond to the Client to a value of 5% of the Aggregate Tram Price substantially in the form of part A, of Schedule 10 (*Bonds and Collateral Warranty*) and issued by a surety approved in advance by the Client, such approval not to be unreasonably withheld or delayed.

44.4 The Tram Supplier shall commence testing the Reliability of each Tram upon the commencement of Passenger Services. If, on the expiry of 13 full Reporting Periods from the commencement of Passenger Services the Tram Supplier has failed to establish Reliability in respect of any Tram then the Client shall be entitled to call upon and retain the Reliability Bond. For the avoidance of doubt, retention of the Reliability Bond shall not be the Client's sole remedy in respect of any failure by the Tram Supplier to establish Reliability in respect of any Tram.

44.5 Within 20 days of any written request from the Client (or such longer period as the Parties, acting reasonably, may agree), the Tram Supplier shall execute a collateral warranty (in the form set out in part B of Schedule 10 (*Bonds and Collateral Warranty*) or where such form is not acceptable, in a different form which is acceptable to both Parties (acting reasonably) in favour of **tie**, CEC, Transport Scotland, TEL and any other party at the Client's reasonable request, in respect of carrying out the Tram Works.

45. TRAM SUPPLIER DELAYS

45.1 If, at any time, the Tram Supplier becomes aware that it will not (or is unlikely to) achieve any Milestone or meet an Agreed Delivery Date for any reason which is not a Relief Event

TIE00899939_0131

("**Delay**") it shall notify the Client's Representative in writing. The Tram Supplier shall detail in the notice:

45.1.1 the reasons for the Delay;

45.1.2 the consequences of the Delay; and

45.1.3 how the Tram Supplier proposes to mitigate the Delay.

45.2 If the Tram Supplier fails to achieve a Milestone and/or meet an Agreed Delivery Date it shall:

45.2.1 take and/or procure the taking of all remedial action necessary to correct the failure and achieve the Milestone and/or meet the Agreed Delivery Date as soon as practicable;

45.2.2 if relevant, pay liquidated damages in accordance with Clause 41 (*Liability, Retention and Liquidated Damages*); and

45.2.3 use all reasonable endeavours to mitigate the Delay and the effects of the Delay.

45.3 If a Milestone is not achieved and/or Agreed Delivery Date not met, the Client may (without prejudice to the Client's other rights and remedies) choose to:

45.3.1 if relevant accept the Tram "as is" subject to a reduction in the applicable Tram Price which reflects the reduced value of the Tram to CEC (such reduction to be agreed between the Parties, both acting reasonably or in the absence of agreement to be determined by the Tram Inspector (acting as an expert and not as an arbitrator) and whose decision shall be binding on the Parties in the absence of manifest error); or

45.3.2 extend, via the change control process in accordance with Clause 20 (*Changes*), the applicable Milestone date and/or Agreed Delivery Date within the Tram Manufacturing and Delivery Programme, and the Deliverables Programme.

45.4 Save as expressly stated to the contrary, any disputes about or arising out of this Clause 45 (*Tram Supplier Delays*) shall be resolved through the Dispute Resolution Procedure. Pending the resolution of the dispute the Tram Supplier shall continue to resolve the causes of and mitigate the effects of the Delay.

46. NOT USED

TIE00899939_0132

47. RELIEF EVENTS

47.1 The Tram Supplier shall within 10 Business Days of it becoming aware of the occurrence of an event which is likely to result in a Relief Event which may cause a delay in relation to the Tram Supplier achieving a Milestone and/or meeting an Agreed Delivery Date ("**Potential Relief Event**") serve a notice in writing ("**Potential Relief Event Notice**") on the Client:

47.1.1 stating the Tram Supplier's current view of the likelihood and probable extent of the delay relating to the Potential Relief Event; and

47.1.2 specifying whether the Tram Supplier is of the view that it is, or may become, entitled to an extension of time if the Potential Relief Event becomes a Relief Event.

47.2 If and to the extent that a Relief Event is the direct cause of a delay in achievement of a Milestone and/or an Agreed Delivery Date, then the Tram Supplier shall be entitled to apply for an extension of time. The Tram Supplier's sole right to such extension of time in connection with a Relief Event shall be as set out in this Clause 47 (*Relief Events*).

47.3 To obtain such extension of time, the Tram Supplier must, as soon as practicable, and in any event within 10 Business Days after it first became aware that the Relief Event had caused or is likely to cause delay:

47.3.1 give to the Client a notice of its claim for an extension of time and full details of the nature of the Relief Event, the date of occurrence and its likely duration;

47.3.2 include in any notice given under Clause 47.3.1 full details of the extension of time claimed including:

47.3.2.1 the Tram Supplier's estimate of the likely effect of such delay upon the Tram Manufacturing and Delivery Programme;

47.3.2.2 mitigation measures adopted and why unsuccessful; and

47.3.2.3 any acceleration measures which the Tram Supplier could take to mitigate the effects of such delay and, where applicable, an estimate of the costs thereof

provided that where a Relief Event has a continuing effect or the Tram Supplier is unable to determine whether the effect of the Relief Event will actually cause it not to be able to comply with its obligations under this Agreement, such that it is not practicable for the Tram Supplier to submit full details in accordance with this Clause 47.3, then the Tram Supplier shall instead submit to the Client:

TIE00899939_0133

(a) a statement to that effect with reasons, together with interim written particulars (including an estimate of the likelihood and the likely extent of the delay); and

(b) thereafter, further interim written particulars until the actual delay caused is ascertainable, whereupon the Tram Supplier shall as soon as reasonably practicable, submit to the Client the items referred to in Clause 47.3.2.

47.3.3 demonstrate to the reasonable satisfaction of the Client that:

47.3.3.1 the Tram Supplier and the Tram Supplier Parties could not have foreseen the occurrence or consequences of the relevant Relief Event and could not have avoided such occurrence or consequences by steps which they might reasonably be expected to have taken;

47.3.3.2 the Relief Event is the direct cause of the delay; and

47.3.3.3 the Tram Supplier is using best endeavours to perform its obligations under this Agreement.

47.4 In the event that the Tram Supplier has complied with its obligations under Clause 47.3 and the Client is satisfied as to the matters specified in Clause 47.3.3, then (as applicable in the circumstances) the Milestone and/or Agreed Delivery Date shall be postponed by such time as shall be reasonable for such a Relief Event, taking into account the likely effect of delay and the Tram Manufacturing and Delivery Programme shall be revised accordingly by the Tram Supplier. For the avoidance of doubt, the Tram Supplier shall be deemed to have waived any entitlement to an extension of time unless the Tram Supplier has submitted a notice under Clause 47.3 within 10 Business Days.

47.5 If the Client decides that the Tram Supplier is not entitled to an extension of time, the Client shall notify the Tram Supplier accordingly as soon as reasonably practicable in writing.

47.6 The Tram Supplier shall notify the Client if at any time it receives or becomes aware of any further information relating to the Relief Event, giving details of that information to the extent that such information is new or renders information previously submitted materially inaccurate or misleading. If the Client's Representative considers that the Tram Supplier is no longer entitled to the extension granted to it pursuant to this Clause 47 (*Relief Events*) because of such new, inaccurate or misleading information then the Client shall be entitled to notify the Tram Supplier in writing that it has terminated the extension. Provided always that the Tram

MUE

TIE00899939_0134

Supplier shall be deemed to have complied with its obligations under this Agreement during the time when the extension was granted.

47.7 If the Parties cannot agree the extent of the extension of time required or the Client disagrees that a Relief Event has occurred (or as to its consequences) or that the Tram Supplier is entitled to any extension of time, either Party may refer the matter for determination in accordance with the Dispute Resolution Procedure.

47.8 The Client shall, in assessing any delay or extension of time for the purpose of this Clause 47 (*Relief Events*):

47.8.1 not take into account:

47.8.1.1 any event or cause of delay which is in any way consequent upon or necessitated by any negligence, omission, default, breach of contract or breach of statutory duty of the Tram Supplier or any Tram Supplier Parties; or

47.8.1.2 any delay which is concurrent with another delay for which the Tram Supplier is responsible; or

47.8.2 take into account an event or cause of delay only if and to the extent that the Tram Supplier establishes to the satisfaction of the Client that the Tram Supplier has used its best endeavours to adjust the order and sequence in which the Tram Supplier proposes to execute the Tram Works in such a manner as to minimise the effects of the delay in, or if possible to avoid altogether any delay in, the progress of the Tram Works.

47.9 The Tram Supplier shall not be entitled to and shall be deemed to have irrevocably waived any entitlement to any extension of time in respect of any failure by the Tram Supplier to:

47.9.1 identify any long lead time works and/or order any long lead time materials; or

47.9.2 manage the required interface with any Approval Body and/or third party where consent or approval for the Tram Works is required at any stage of such works; or

47.9.3 identify any instructions which are required from the Client in order to progress the Tram Works in accordance with the Tram Manufacturing and Delivery Programme.

47.10 If the Tram Works are delayed in circumstances other than those entitling the Tram Supplier to an extension of time as set out in this Clause 47 (*Relief Events*), the Tram Supplier shall inform the Client at the earliest opportunity and shall give an estimate of the likely effect upon the Tram Manufacturing and Delivery Programme. In such circumstances, the Tram Supplier

TIE00899939_0135

at its own expense shall take such acceleration measures as are necessary to achieve the requirements of the Tram Manufacturing and Delivery Programme.

47.11 Notwithstanding the occurrence of a Relief Event, the Tram Supplier shall continue to carry out the Tram Works unless otherwise agreed in connection with this Clause 47 (*Relief Events*), except in cases of a Force Majeure Event affecting the Tram Supplier's manufacturing capability.

47.12 The Tram Supplier acknowledges and agrees that:

47.12.1 subject to Clause 47.12.2, any extension of time given by the Client's Representative under this Clause 47 (*Relief Events*) to a Milestone and/or to an Agreed Delivery Date shall not of itself entitle the Tram Supplier to any extension to any other Milestone and/or Agreed Delivery Date or any other period and the Tram Supplier must make a claim under this Clause 47 (*Relief Events*) for an extension of time to each date or period to which it considers it is, or may become, entitled under this Clause 47 (*Relief Events*);

47.12.2 the Client shall be entitled (in its absolute discretion) to include within an extension, an extension to any other Milestone and/or Agreed Delivery Date;

47.12.3 any extension of time granted by the Client to the Tram Supplier shall, except as expressly provided elsewhere in this Agreement, be in full compensation and satisfaction for any loss sustained or sustainable by the Tram Supplier in respect of any matter or thing in connection with which that extension is granted;

47.12.4 the Client may grant an extension of time at any time, whether prospective or retrospective, whether interim or in full and the Client's Representative shall not be bound by or limited to the grounds (if any) set out in the Tram Supplier's relief event notice; and

47.12.5 the procedures to be followed where the occurrence of a delay has been caused by a Client Change shall be those set out in Clause 20 (*Changes*) and not this Clause 47 (*Relief Events*).

48. QUALIFYING CHANGES IN LAW

48.1 If a Qualifying Change in Law occurs or is to occur, then either Party may write to the other to express an opinion on its likely effects, giving details of its opinion of:

MG

TIE00899939_0136

48.1.1 any necessary change in the Tram Works;

48.1.2 whether any changes are required to the terms of this Agreement to deal with the Qualifying Change in Law; or

48.1.3 whether relief from compliance with any obligations under this Agreement is required as a result of the Qualifying Change in Law,

48.1.4 in each case giving in full detail the procedure for implementing the Qualifying Change in Law. Responsibility for any costs of such implementation (and any resulting variation to payments due under this Agreement or other payment method at the Client's discretion) shall be dealt with in accordance with Clauses 48.2 and 48.3 below.

48.2 As soon as reasonably practicable after receipt of any notice from either Party under Clause 48.1 above, the Parties shall discuss and agree the issues referred to in Clause 48.1 above and any ways in which the Tram Supplier can mitigate the effect of the Qualifying Change in Law and the Tram Supplier shall:

48.2.1 provide evidence to the Client that the Tram Supplier has used and will continue to use all reasonable endeavours (including where appropriate and practicable the use of competitive quotes) to minimise any increase in costs and maximise any reduction in costs;

48.2.2 demonstrate how the effects of the Qualifying Change in Law will be mitigated;

48.2.3 demonstrate that the relevant changes will be implemented in the most cost-effective manner, including showing where reasonably practicable, that when any expenditure is incurred relevant Changes in Law that are foreseeable at the time of consideration of the specific Qualifying Change in Law and which relate to that Qualifying Change in Law have been taken into account by the Tram Supplier; and

48.2.4 give evidence, where reasonably practicable, as to how the Qualifying Change in Law has affected the fees and/or costs of similar contractors.

48.3 As soon as reasonably practicable after the issues referred to in Clause 48.2 have been agreed between the Parties or determined pursuant to the Dispute Resolution Procedure, the Client shall give a Client Notice of Change and the provisions of Clause 20 (*Changes*) shall apply except that the Tram Supplier shall be obliged to implement the change in all circumstances (except to the extent that such change is not necessary to implement the Qualifying Change in

TIE00899939_0137

Law). The Client shall issue a Client Change Order once it has been agreed or determined pursuant to the Dispute Resolution Procedure. In assessing the value of the change, the Client shall pay the agreed amount less the agreed threshold of £30,000 for each and every event. The Client will, at its sole discretion, determine the scope of each and every event.

48.4 Except as otherwise expressly provided in this Agreement, the Tram Supplier shall be responsible for any increase in its costs and shall not be entitled to any relief from its obligations under this Agreement to the extent that the same is caused as a result of a General Change in Law.

49. COMPENSATION EVENTS

49.1 If and to the extent that a Compensation Event:

49.1.1 is the direct cause of delay in achievement of a Milestone and/or an Agreed Delivery Date (as appropriate); and/or

49.1.2 causes the Tram Supplier to incur costs beyond such costs which were reasonably anticipated to be incurred by the Tram Supplier,

then the Tram Supplier shall be entitled to apply for an extension of time and/or claim costs under this Agreement. The Tram Supplier's sole right to an extension of time and/or to claim costs in connection with a Compensation Event shall be as set out in this Clause 49 (*Compensation Events*).

49.2 To obtain such extension of time and/or claim costs, the Tram Supplier must, as soon as practicable, and in any event within 10 Business Days after it first became aware that the Compensation Event had caused or is likely to cause delay or the Tram Supplier to incur additional costs:

49.2.1 give to the Client a notice of its claim for an extension of time and/or costs and full details of the nature of the Compensation Event, the date of occurrence and its likely duration;

49.2.2 include in any notice given under Clause 49.2.1 full details of the extension of time and/or any costs claimed including:

49.2.2.1 the Tram Supplier's estimate of the likely effect of such delay upon the Tram Manufacturing and Delivery Programme;

49.2.2.2 details of the costs;

TIE00899939_0138

49.2.2.3 mitigation measures adopted and why unsuccessful; and

49.2.2.4 any acceleration measures which the Tram Supplier could take to mitigate the effects of such delay and, where applicable, an estimate of the costs thereof; and

49.2.3 demonstrate to the reasonable satisfaction of the Client that:

49.2.3.1 the Tram Supplier and the Tram Supplier Parties could not have foreseen the occurrence or consequences of the relevant Compensation Event and could not have avoided such occurrence or consequences by steps which they might reasonably be expected to have taken;

49.2.3.2 the Compensation Event is the direct cause of the delay and/or the additional costs; and

49.2.3.3 the Tram Supplier is using best endeavours to perform its obligations under this Agreement.

49.3 In the event that the Tram Supplier has complied with its obligations under Clause 49.2 and the Client is satisfied as to the matters specified in Clause 49.2.3, then (as applicable in the circumstances):

49.3.1 the Milestone and/or Agreed Delivery Date shall be postponed by such time as shall be reasonable for such a Compensation Event, taking into account the likely effect of delay and the Tram Manufacturing and Delivery Programme shall be revised accordingly by the Tram Supplier; and/or

49.3.2 the Tram Supplier shall be paid the amount of any direct and demonstrable cost as may be reasonable in the circumstances of the Compensation Event.

For the avoidance of doubt, the Tram Supplier shall be deemed to have waived any entitlement to an extension of time unless the Tram Supplier has submitted a notice under Clause 49.2 within 10 Business Days.

49.4 The Tram Supplier shall notify the Client if at any time it receives or becomes aware of any further information relating to the Compensation Event, giving details of that information to the extent that such information is new or renders information previously submitted materially inaccurate or misleading. If the Client's Representative considers that the Tram Supplier is no longer entitled to the extension granted to it pursuant to this Clause 49 (*Compensation Events*)

TIE00899939_0139

because of such new, inaccurate or misleading information then the Client shall be entitled to notify the Tram Supplier in writing that it has terminated the extension. Provided always that the Tram Supplier shall be deemed to have complied with its obligations under this Agreement during the time when the extension was granted.

49.5 If the Parties cannot agree the extent of the extension of time required or the additional costs claimed or the Client disagrees that a Compensation Event has occurred (or as to its consequences) or that the Tram Supplier is entitled to any extension of time and/or additional costs, either Party may refer the matter for determination in accordance with the Dispute Resolution Procedure.

49.6 The Client shall, in assessing any delay or extension of time or costs for the purpose of this Clause 49 (*Compensation Events*):

49.6.1 not take into account:

49.6.1.1 any event or cause of delay or costs which is in any way consequent upon or necessitated by any negligence, omission, default, breach of contract or breach of statutory duty of the Tram Supplier or any Tram Supplier Parties; or

49.6.1.2 any delay which is concurrent with another delay for which the Tram Supplier is responsible; or

49.6.2 take into account an event or cause of delay or costs only if and to the extent that the Tram Supplier establishes to the satisfaction of the Client that the Tram Supplier has used its best endeavours to adjust the order and sequence in which the Tram Supplier proposes to execute the Tram Works in such a manner as to minimise the effects of the delay in, or if possible to avoid altogether any delay in, the progress of the Tram Works and mitigate the costs.

49.7 The Tram Supplier shall not be entitled to and shall be deemed to have irrevocably waived any entitlement to any extension of time and/or additional costs in respect of any failure by the Tram Supplier, to:

49.7.1 identify any long lead time works and/or order any long lead time materials; or

49.7.2 manage any required interface with any Approval Body and/or third party where consent or approval for the Tram Works is required at any stage of such works; or

TIE00899939_0140

49.7.3 identify any instructions which are required from the Client in order to progress the Tram Works in accordance with the Tram Manufacturing and Delivery Programme.

49.8 If the Tram Works are delayed in circumstances other than those entitling the Tram Supplier to an extension of time as set out in this Clause 49 (*Compensation Events*), the Tram Supplier shall inform the Client at the earliest opportunity and shall give an estimate of the likely effect upon the Tram Manufacturing and Delivery Programme. In such circumstances, the Tram Supplier at its own expense shall take such acceleration measures as are necessary to achieve the requirements of the Tram Manufacturing and Delivery Programme.

49.9 Notwithstanding the occurrence of a Compensation Event, the Tram Supplier shall continue to carry out the Tram Works unless otherwise agreed in connection with this Clause 49 (*Compensation Events*).

49.10 Notwithstanding any other provision of this Clause 49 (*Compensation Events*), if a Compensation Event occurs because the Depot is not ready to accept delivery of the Trams following the issue of the Factory Acceptance Type Test Certificate and Factory Acceptance Routine Certificate in respect of a Tram in accordance with Clause 28 (*Pre-Delivery Inspections and Factory Acceptance Tests*) then:

49.10.1 unless directed otherwise by the Client in writing, the Trams which cannot be delivered shall be stored by the Tram Supplier in the most practicable and cost effective location and manner; and

49.10.2 the Tram Supplier shall promptly remove the Trams from storage and deliver the Trams to the Depot in accordance with the terms of this Agreement when the Client notifies the Tram Supplier in writing that the Depot is ready to accept delivery of the Trams.

50. BEST VALUE

50.1 The Tram Supplier shall provide reasonable assistance, throughout the Term and to the extent consistent with its obligations under this Agreement, make arrangements to secure continuous improvement in the way in which the Tram Works are conducted having regard to the Project Vision and, a combination of economy, efficiency and effectiveness.

50.2 The Tram Supplier agrees to undertake (or refrain from undertaking) such actions as the Client shall reasonably request, and shall:

TIE00899939_0141

50.2.1 prepare and, support and assist the Client (in compliance with Clause 24 (*Audit and Inspection*)) in preparing best value performance plans and conducting best value reviews in relation to the Tram Works;

50.2.2 comply with requests for information, data or other assistance made by the Client in pursuance of its best value assessment; and

50.2.3 comply with all requests by the Client, acting reasonably, to procure the attendance of specific officers or employees of the Tram Supplier or Tram Supplier Parties at any Client meetings and **tie** meetings at which the Tram Works are to be discussed.

50.3 The Tram Supplier acknowledges that **tie** may undertake an annual customer satisfaction survey ("**tie Customer Satisfaction Survey**") in order to:

50.3.1 assess satisfaction among the public and passengers with the quality, efficiency and effectiveness of the Tram Works;

50.3.2 complement preparation of the Annual Service Report; and

50.3.3 monitor compliance by the Tram Supplier with its obligations including its management of the Tram Works,

and the Tram Supplier shall provide reasonable assistance to enable the Client and **tie** to undertake the **tie** Customer Satisfaction Survey.

50.4 Without prejudice to any other provision in this Agreement (and no later than 2 Reporting Periods prior to the end of any year), the Tram Supplier shall, at its own cost, provide a written report (the "**Annual Service Report**") which shall review the quality and performance of all Tram Works measured during the relevant period and show the key issues to be addressed going forward, including customer feedback, operational and maintenance issues and improvement proposals. The customer feedback shall include the results of any **tie** Customer Satisfaction Survey carried out pursuant to Clause 50.3. The Tram Supplier shall upon written request promptly provide supporting information to verify and audit the information and other material contained in the Annual Service Report.

50.5 The Client may make comments on and/or objections to and/or specify omissions in the supporting information or the Annual Service Report and in such case shall provide the Tram Supplier with written comments and/or objections within 40 Business Days of receipt. In the absence of such Client comments or objections, the supporting information (or the Annual Service Report) shall be deemed to have been accepted by the Client.

TIE00899939_0142

50.6 The Tram Supplier shall, within 25 Business Days of receipt of the Client comments and/or objections under Clause 50.5 make revisions having regard to such comments and/or objections and resubmit the information and report to the Client. If the information and reports cannot be agreed by the Parties then the matter will be determined in accordance with the Dispute Resolution Procedure.

50.7 If, in the Client's reasonable opinion, the provision and performance of the Tram Works could be more effective, efficient and economic having regard to the Annual Service Report and the **tie** Customer Satisfaction Survey, then the Client may serve an Client Notice of Change pursuant to Clause 20 *(Changes)* stating the desired nature and timing of the changes to the provision or performance of the Tram Works (or the relevant part thereof).

50.8 The Tram Supplier shall, in conjunction with the Client, develop Best Value Improvement Plans setting out mutually agreed tasks between the Tram Supplier and the Client to improve the delivery of the Tram Works, and demonstrate continuous improvement in the Tram Works, and the achievement of the Project Vision.

50.9 The preparation of Best Value Improvement Plans will take into account the conclusions from the Annual Service Report and the **tie** Customer Satisfaction Surveys.

51. COPYRIGHT AND INTELLECTUAL PROPERTY

51.1 All Tram Supplier IPR shall continue to be owned by the Tram Supplier.

51.2 The Tram Supplier hereby:

51.2.1 assigns by way of future assignation to the Client with full title guarantee the Project IPR which is created by it and shall procure that Project IPR created by any Tram Supplier Party is also so assigned, for all of the residue of the term of such rights and all renewals or extensions thereof and together with all accrued causes of action in respect thereof;

51.2.2 grants to the Client a non-exclusive perpetual irrevocable royalty free licence to use such Tram Supplier IPR as may be necessary for the Client to use in relation to the Tram Supplier's scope of supply and having regard to the operating, maintaining and repairing of the Edinburgh Tram Network, and including any and all Intellectual Property Rights which subsist at any time in:

51.2.2.1 the Tram Documentation;

TIE00899939_0143

51.2.2.2 the Trams; and

51.2.2.3 Spare Parts and/or Special Tools.

For clarity, nothing within this sub-clause shall permit the Client to use Tram Supplier IPR for any commercial or tendering purposes (except by CEC, TEL or **tie** Limited in connection with the extension or expansion of the infrastructure of the Edinburgh Tram Network). Such Tram Supplier IPR shall not, without the express written consent of the Tram Supplier, be used, copied or disclosed in whole or in part by the Client other than for the purposes outlined in this Clause 51.2.2;

51.2.3 grants to the Client, with the prior written consent of the Tram Supplier (such consent not to be unreasonably withheld or delayed) the right to grant non-exclusive non-assignable sub-licences to third parties for such lengths of time as the Client may reasonably require and otherwise on the same terms as the licence granted to the Client pursuant to Clause 51.2.2 above, to use the Tram Supplier IPR referred to in that Clause (other than in relation to Third Party Software in respect of which the Tram Supplier shall use its reasonable endeavours to obtain the grant of a license to use such Software in so far as is necessary or desirable for such third party to use such Tram Supplier IPR in relation to any projects associated with the Tram Works including in relation to any extension or expansion of the Edinburgh Tram Network;

51.3 The Tram Supplier shall promptly deliver to the Client copies of all Tram Supplier IPR licensed to the Client pursuant to this Clause 51 (*Copyright and Intellectual Property*).

51.4 For the avoidance of doubt, the persons to whom the Client may grant sub-licences pursuant to Clause 51.2.3 shall include:

51.4.1 **tie** and any **tie** Party;

51.4.2 any Client Party;

51.4.3 the Operator and any party other than the Operator providing support to **tie** in relation to the System;

51.4.4 the SDS Provider;

51.4.5 the Tram Maintainer;

51.4.6 CEC and Transport Edinburgh Limited with the prior written consent of the Tram Supplier such consent not to be unreasonably withheld

TIE00899939_0144

51.4.7 any assignee or transferee under this Agreement;

51.4.8 any party providing maintenance in respect of the Edinburgh Tram Network.

51.5 The Client hereby grants to the Tram Supplier a non-exclusive revocable royalty free licence for the duration of this Agreement to use such Project IPR as is owned by it as may be necessary for the Tram Supplier to use solely and exclusively for the purpose of performing the Tram Works.

51.6 The copyright of this Agreement and any data or software supplied to the Tram Supplier by the Client, shall remain solely with the Client.

51.7 The Tram Supplier shall at any time and from time to time hereafter at the request of the Client execute all such documents and do all such further acts as may be required in order to vest the rights referred to in Clause 51.2.1 in the Client.

51.8 The Tram Supplier waives any and all moral rights held or to be held by the Tram Supplier in the Deliverables and Project IPR and shall use best endeavours that all of the Tram Supplier Parties who are authors of the whole or any part of the Project IPR waive and abandon in writing all moral rights.

51.9 The Tram Supplier agrees that all rights in the Project IPR shall remain the property of the Client and the Tram Supplier shall retain no rights in the Project IPR beyond the licence granted in Clause 51.5. The Tram Supplier shall be entitled to use such Project IPR only on the terms set out herein and solely for the purpose of the performance of the Tram Works. In particular, otherwise as permitted in this Agreement herein, the Tram Supplier shall not disclose, assign, sub-license, lease, rent or otherwise dispose of the Project IPR.

51.10 The Client shall be entitled to use the rights granted to it pursuant to Clause 51.2 (and to sub-license to third parties such rights) to perform its obligations and exercise its rights and allow all Client Parties to perform their obligations and exercise their rights in respect of the Project, such performance of rights and exercise of obligations to include:

51.10.1 carrying out any necessary completion of the design, manufacture, construction and commissioning of any Trams and each part thereof;

51.10.2 carrying out any and all work in relation to the design and construction, testing and operation of the System;

TIE00899939_0145

51.10.3 carrying out all and any necessary maintenance, repairs and work including work to rectify any faults with the Spare Parts and Special Tools or breach of the Warranties and to modify them to comply with any Law or other mandatory requirements or otherwise;

51.10.4 making copies of using and reproducing in any format the Tram Documentation and all other documents which the Tram Supplier is required to deliver in accordance with this Agreement for the purposes of maintenance and repair of the Trams and/or the maintenance of the Spare Parts and Special Tools but only such copies as may be reasonably necessary to achieve such purpose; and

51.10.5 enabling and allowing relevant third parties to perform their obligations in respect of the Project.

51.11 For the purposes of this Clause 51 (*Copyright and Intellectual Property*), "use" shall include the acts of copying, modifying, adapting and translating the material in question and/or incorporating them with other materials and the term "the right to use" shall be construed accordingly.

51.12 The Tram Supplier:

51.12.1 hereby grants to the Client, free of charge, an irrevocable, perpetual, non-exclusive and transferable (but only to any assignee or transferee of any rights or benefits under this Agreement or upon or at any time following termination or expiry of this Agreement) a licence (carrying the right to grant sub-licences) to use the Intellectual Property Rights which are or become at any time during the Term vested in the Tram Supplier to the same extent as the Tram Supplier has acquired such rights; and

51.12.2 shall in respect of any of the Intellectual Property Rights which the Tram Supplier is not entitled to license to the Client pursuant to Clause 51.2, use its best endeavours to procure the grant of a licence from the owners of such Intellectual Property Rights in favour of the Client in substantially the same terms as the licence set forth in Clause 51.2.

51.13 The Client shall not exercise any of the rights licensed to it pursuant to this Clause 51 (*Copyright and Intellectual Property*) to design, construct, manufacture or commission or have designed, constructed, manufactured or commissioned any of the Trams or any part thereof unless and until:

TIE00899939_0146

51.13.1 the Client and the Tram Supplier cannot agree a price and/or delivery time in relation to a Spare Part or Special Tool pursuant to Clause 34.3; and/or

51.13.2 there occurs a Tram Supplier Default;

51.14 The Client shall not be entitled to adapt, reverse engineer, decompile, disassemble and/or modify the Tram Supplier Software in whole or in part except:

51.14.1 as permitted by Law; and

51.14.2 to the extent that such action is legitimately required for the purposes of integrating the operation of the Tram Supplier Software with the operation of other software or systems used by the Client or any of the Client Parties on the Edinburgh Tram Network.

51.15 All payments and royalties payable in one sum or by instalments or otherwise in connection with Intellectual Property Rights used by the Tram Supplier in connection with or to enable the Tram Supplier to carry out the Project or licensed to the Client shall be deemed to be included in the Aggregate Tram Price and shall be paid by the Tram Supplier to those to whom they may be due or payable.

51.16 Where a claim or proceeding is made or brought against the Client or its permitted licensees which arises out of the infringement of any Intellectual Property Rights in any materials provided by the Tram Supplier or any Tram Supplier Party to the Client then the Tram Supplier shall indemnify and keep the Client indemnified on demand at all times from and against all Indemnified Liabilities arising in connection with such claim or proceedings.

51.17 The provisions of this Clause 51 (*Copyright and Intellectual Property*) shall apply during the continuance of this Agreement and after its termination howsoever arising, and immediately following termination howsoever arising, the Tram Supplier shall provide the Client with:

51.17.1 a copy of the Object Code on media that is reasonably acceptable to the Client; and

51.17.2 a copy of all documentation, manuals and other technical information relating to the Software that is reasonably required by the Client;

51.18 The Tram Supplier shall not reproduce or publish any document or matter relating to the Tram Works or this Agreement, either alone or in association with any other body or person, without the prior written consent of the Client.

TIE00899939_0147

51.19 Software

51.19.1 In designing and creating Tram Supplier Software forming part of the Deliverables, the Tram Supplier shall ensure (and the Tram Inspector shall audit):

51.19.1.1 that orderly auditable records of the progress of the development of the Tram Supplier Software from the functional requirements to the final code are maintained, and that regular verification and testing occurs at each stage of the design process;

51.19.1.2 that it shall produce, during the development of the Tram Supplier Software comprehensive and accurate documentation including specifications, cause and effect charts and flowcharts are produced;

51.19.1.3 that the documentation, access rights, details of configuration software and the like produced in accordance with Clause 51.19.1.1, is such as to enable an appropriately qualified independent auditor (who is not involved in the original design) to:

(i) relate the Tram Supplier Software to the performance of the relevant equipment under normal and fault conditions;

(ii) to verify its compliance with the functional requirements of that equipment; and

(iii) to operate and reconfigure the Tram Supplier Software without the assistance of the Infraco; and

51.19.1.4 that the Tram Supplier Software is designed, developed and documented following an industry-recognised standard (and where no particular standard is required by the Upgrade Works Specifications or Central SCADA Works Specifications (as such terms are used in the Employer's Requirements)), using recognised quality control methods.

51.19.2 Subject to the terms of any Third Party Software Licence, the Tram Supplier shall to a reasonable extent, create or provide:

51.19.2.1 coding and documentation, in machine readable form, of the final structure of the Tram Supplier Software, and of the intermediate stages leading to it (i.e. source and object codes); and

TIE00899939_0148

51.19.2.2 where the Client so instructs, usable copies of any ancillary computer programs used to generate the code (such as compilers) provided that the Client meet the costs of any additional Third Party Software Licence.

51.19.3 Where the Tram Supplier is required to provide Tram Supplier Software as part of a Deliverable under this Agreement it shall, within thirty (30) days of acceptance of the Tram Supplier Software by the Client place, or shall procure the placement of, a copy of the source code of the Tram Supplier Software in escrow with the NCC Group of Manchester Technology Centre, Oxford Road, Manchester ("**NCC**") or such other escrow agent as the Parties may agree. The Parties shall enter into NCC's standard escrow agreement (provided that, in the case of Third Party Software, the Tram Supplier shall procure that the owner of such software enters into such escrow agreement) for a single licensee (or if no such agreement exists, the appropriate standard agreement as stipulated by NCC). The cost of such source code deposit (including all renewal costs) shall be payable by the Client.

Technical Library

51.20 The Tram Supplier shall;

51.20.1 as soon as reasonably practicable shall cooperate with the Client in the establishment by the Client of a secure, virtual electronic site for the storage of Deliverables other than the source code (the "**Technical Library**"). Such electronic site shall be capable of being accessed through a standard web browser. At the Client's request, the Tram Supplier will in addition also cooperate with the Client in delivering and managing documents to establish a physical site with paper copies of the Technical Library;

51.20.2 as and when Deliverables (other than the source code) are produced or updated from time to time:

51.20.2.1 where such Deliverables are produced or updated by the Tram Supplier, promptly ensure that a copy of those Deliverables or its updated version is placed in the Technical Library;

51.20.2.2 where such Deliverables are produced or updated by any sub-contractor of the Tram Supplier, as soon as reasonably practical ensure that a copy of those Deliverables or their updated version(s) are placed in the Technical Library;

51.20.2.3 establish an index, in a format approved by the Client, of all

TIE00899939_0149

Deliverables deposited in the Technical Library from time to time and update that index whenever any such Deliverables are deposited in the Technical Library;

51.20.2.4 deliver one copy of the index and each update established under Clause 51.20.2.3 to the Client; and

51.20.2.5 permit the Client (or its nominee) to have access to the Technical Library from time to time during normal business hours, and following reasonable notice from the Client (or its nominee) to the Tram Supplier, for the purpose only of auditing its contents against the current catalogue.

51.21 Within three Business Days of the earlier of the release of the Reliability Bond or the termination of this Agreement, the Tram Supplier shall hand over the Technical Library, and the secure access to it, to the Client and the Tram Supplier's obligations in relation to the further maintenance of the Technical Library shall cease. Should an audit of the contents of the Technical Library against the current catalogue reveal that the index does not contain details of categories or types of Deliverables which should be contained within the Technical Library, the Client may request and the Tram Supplier grants access to the Client to the Technical Library from time to time during business hours in order to audit the contents of the Technical Library to determine whether such categories and types of Deliverables are in fact contained within the Technical Library. Any such request shall be made with reasonable notice and shall indicate with reasonable clarity the technical information or the type of Deliverable which is required for review.

52. CONFIDENTIAL INFORMATION

52.1 Each Party:

52.1.1 shall treat all Confidential Information belonging to the other Party as confidential and safeguard it accordingly; and

52.1.2 shall not disclose any Confidential Information belonging to the other Party to any other person without the prior written consent of the other Party, or except to such persons and to such extent as may be necessary for the performance of this Agreement or except where disclosure is otherwise expressly permitted by the provisions of this Agreement.

52.2 Each Party shall take all necessary precautions to ensure that all Confidential Information obtained from the other Party, or **tie,** under or in connection with this Agreement:

TIE00899939_0150

52.2.1 is given only to such of the staff professional advisors and/or the Client Parties, Tram Supplier Parties or **tie** in connection with this Agreement as is strictly necessary for the performance by the Tram Supplier of the Tram Works and its other obligations under this Agreement; and

52.2.2 is treated as confidential and not disclosed (without prior approval from the owner of the Confidential Information) or used by such staff or professional advisors and/or the Tram Supplier Parties otherwise than for the purposes of this Agreement.

52.3 Where it is considered necessary in the opinion of the owner of the Confidential Information, the other Party shall ensure that its staff, contractors, agents, Sub-contractors, consultants and professional advisors sign a confidentiality undertaking before commencing work in connection with this Agreement.

52.4 Neither Party shall use any Confidential Information it receives from the other Party or **tie** other than for the purposes of this Agreement.

52.5 The provisions of Clauses 52.1 to 52.4 shall not apply to:

52.5.1 any information which is or becomes public knowledge (otherwise than by breach of this Clause 52 (*Confidential Information*));

52.5.2 any information which was in the possession of the receiving Party, without restriction as to its disclosure, before receiving it from the disclosing Party;

52.5.3 any information which is received from a third party who lawfully acquired it and who is under no obligation restricting its disclosure;

52.5.4 any information which is independently developed without access to the Confidential Information;

52.5.5 any disclosure pursuant to a statutory, legal or parliamentary obligation placed upon the Party making the disclosure, including any requirements for disclosure under FOISA, the Code, or the Environmental Information Regulations pursuant to Clauses 52.8 to 52.12(inclusive);

52.5.6 any disclosure by the Client of this Agreement including the Tram Supplier's fees and commercial terms, any information relating to the design of any aspect of the Edinburgh Tram Network and such other information as may be reasonably required

TIE00899939_0151

for the purpose of conducting a due diligence exercise with any candidates for other agreements relating to the System and their advisers;

52.5.7 any disclosure by the Client of this Agreement and any related information to **tie**, any **tie** Party, the Operator or any Client Party;

52.5.8 any information which is required to be disclosed to that Party's insurers and/or financial or legal advisers subject to Clauses 52.2 and 52.3;

52.5.9 any registration of information in respect of the Consents and any property registration required;

52.5.10 any disclosure of information by the Client and/or **tie** to Transport Edinburgh Limited, CEC, Partnerships UK Limited, the Scottish Ministers, Transport Scotland or any department, office or agency of the Scottish Executive or the UK government;

52.5.11 any disclosure for the purpose of any examination, pursuant to applicable Law, of the economy, efficiency and effectiveness with which **tie** has used its resources or funding made available to it including any examination pursuant to the Local Government (Scotland) Act 1973 as amended by the Local Government in Scotland Act 2003 of whether **tie** has secured best value in the performance of its functions; and

52.5.12 any disclosure of Confidential Information obtained from the Tram Supplier to:

52.5.12.1 any government department or any other local government authority or public authority equivalent in status to **tie.** All government departments or any other local government authority or public authority equivalent in status to **tie** receiving such Confidential Information shall be entitled to further disclose the Confidential Information to other government departments or any other local government authority or public authority equivalent in status to **tie** on the basis that the information is confidential and is not to be disclosed to a third party which is not part of any government department or any other local government authority or public authority equivalent in status to **tie**;

52.5.12.2 to any person engaged in providing any services to **tie** or the Client for any purpose relating to or ancillary to this Agreement, provided that in disclosing information under this Clause 52 (*Confidential Information*) the Client discloses only the information which is necessary for the purpose concerned and requires that the information is treated in confidence and that a confidentiality undertaking is given where appropriate.

TIE00899939_0152

52.6 Nothing in this Clause 52 (*Confidential Information*) shall prevent either Party from using any techniques, ideas or know-how gained during the performance of this Agreement in the course of its normal business, to the extent that this does not result in a disclosure of Confidential Information or an infringement of Intellectual Property Rights.

52.7 In the event that the Tram Supplier fails to comply with this Clause 52 (*Confidential Information*), the Client reserves the right to terminate the Agreement by notice in writing in accordance with Clause 55 (*Tram Supplier Default Termination*).

52.8 The Tram Supplier acknowledges that **tie** is subject to the requirements of FOISA and the Environmental Information Regulations and shall assist and cooperate with **tie** or the Client (at the Tram Supplier's expense) to enable **tie** or the Client to comply with these Information disclosure requirements. **tie** or the Client agrees that it shall comply with the terms of the Code in respect of the discharge of its obligations under FOISA.

52.9 The Tram Supplier shall and shall procure that the Tram Supplier Parties shall:

52.9.1 transfer any Request for Information to **tie** or the Client as soon as practicable after receipt and in any event within five Business Days of receiving a Request for Information;

52.9.2 provide **tie** or the Client with a copy of all information in its possession or power in the form that **tie** or the Client requires within five Business Days (or such other period as **tie** or the Client may specify) of **tie** requesting that information; and

52.9.3 provide all necessary assistance as reasonably requested by **tie** or the Client to enable **tie** to respond to a Request for Information within the time for compliance set out in section 10 of FOISA or regulation 5 of the Environmental Information Regulations.

52.10 **tie** shall be responsible for determining at its absolute discretion whether the Confidential Information and/or any other information:

52.10.1 is exempt from disclosure in accordance with the provisions of the Code, FOISA or the Environmental Information Regulations; and

52.10.2 is to be disclosed in response to a Request for Information,

52.11 In no event shall the Tram Supplier respond directly to a Request for information unless expressly authorised to do so by **tie**.

TIE00899939_0153

52.12 The Tram Supplier acknowledges that **tie** may be obliged, pursuant to the Code, FOISA, or the Environmental Information Regulations to disclose information:

52.12.1 without consulting with the Tram Supplier, or

52.12.2 following consultation with the Tram Supplier and having taken its views into account.

52.13 The Tram Supplier shall ensure that all information and Deliverables produced in the course of this Agreement or relating to this Agreement are retained for disclosure and shall permit the Client and **tie** to inspect such records as requested from time to time.

52.14 The Tram Supplier acknowledges that any lists or schedules provided by it outlining Commercially Sensitive Information are of indicative value only and that **tie** and/or the Client may nevertheless be obliged to disclose Confidential Information in accordance with Clause 52.8.

52.15 Any public relations material, press releases, public presentations or conference engagements in relation to this Agreement planned by the Tram Supplier require the Client's prior written approval.

53. PROTESTOR ACTION

53.1 If any Protestor Action occurs in respect of the Edinburgh Tram Network the Tram Supplier shall take whatever action and measures as are necessary to ensure the continued operation of its obligations under this Agreement during any relevant period of Protestor Action and to provide such support and assistance to the Client in relation to the Project as the Client may reasonably require.

53.2 In respect of any Protestor Action, if compliance with Clause 53.1 involves the Tram Supplier in any delay, the Client's Representative shall take such delay into account in determining any extension of time to which the Tram Supplier is entitled pursuant to Clause 49 *(Compensation Events*) provided that the Client shall not take into account any delay to the extent that the impact of such Protestor Action on the progress of the Tram Works has been caused by a breach of this Agreement by the Tram Supplier and/or such impact could have been mitigated by the Tram Supplier.

TIE00899939_0154

54. SUSPENSION OF WORK

54.1 The Client's Representative may, having received the written permission of **tie**, suspend the progress of the Tram Works or any part thereof, excluding the manufacture of Trams, for such time or times and in such manner as the Client's Representative may consider necessary. The Tram Supplier shall, during such suspension, properly protect and secure the work so far as is necessary in the opinion of the Client's Representative. Except to the extent that such suspension is:

54.1.1 otherwise provided for in this Agreement;

54.1.2 necessary by reason of some default on the part of the Tram Supplier; or

54.1.3 necessary for the proper completion or for the safety of the Tram Works or any part thereof in as much as such necessity does not arise from any act or default of the Client's Representative or Client,

then if compliance with the Client's Representative's instructions under this Clause 54 (*Suspension of Work*) involves the Tram Supplier in delay or extra cost, including the cost of storage at the Tram Supplier's own or an alternative facility, the Client's Representative shall take such delay into account in determining any extension of time or costs to which the Tram Supplier is entitled under Clause 49 (*Compensation Events*).

54.2 If the progress of the Tram Works or any part thereof is suspended on the written order of the Client's Representative and if permission to resume work is not given by the Client's Representative within a period of six months from the date of suspension then the Tram Supplier may unless such suspension is otherwise provided for in this Agreement or continues to be necessary by reason of some default on the part of the Tram Supplier serve a written notice on the Client's Representative requiring permission within 20 Business Days from the receipt of such notice to proceed with the Tram Works or that part thereof in regard to which progress is suspended. If within the said 20 Business Days the Client's Representative does not grant such permission, the Tram Supplier by a further written notice so served may (but it is not bound to) elect to treat the suspension where it affects part only of the works as an omission of such part under Clause 20 (*Changes*) or where it affects the whole Tram Works as an abandonment of this Agreement by the Client.

54.3 Within 45 Business Days of service of notice by the Tram Supplier in accordance with Clause 54.2 to treat any suspension as an abandonment of this Agreement, this Agreement shall be

TIE00899939_0155

terminated in whole and the provisions of Clause 62 (*Payment on Termination*) and Clause 63 (*Effect of Termination or Expiry*) shall apply.

55. TRAM SUPPLIER DEFAULT TERMINATION

55.1 Without prejudice to any of the Client's other rights or remedies, the Client may, subject to the approval of **tie** Limited, after giving 7 days notice in writing to the Tram Supplier terminate this Agreement in whole or in part on any of the following grounds set out in Clauses 55.1.1 to 55.1.11(each a "**Tram Supplier Default**"), and if this Agreement is terminated in part the Client may terminate this Agreement in respect of any one or more Trams on or following:

55.1.1 breach of any material provision or requirement of this Agreement, where the Client has by written notice requested rectification of such breach and the Tram Supplier has failed to rectify such breach within 10 Business Days.

55.1.2 any failure to pay any Liquidated Damages within a period of forty five days of the due date as specified in Clause 41 (*Liability, Retention and Liquidated Damages*);

55.1.3 any failure to meet a Milestone within 180 days of the date for completion;

55.1.4 the occurrence of any Insolvency Event in relation to the Tram Supplier or any Affiliate of the Tram Supplier;

55.1.5 any Change in Control of the Tram Supplier or any other change in the legal status of the Tram Supplier occurs which is materially prejudicial to carrying out and completing the Tram Works;

55.1.6 any abandonment of the Tram Works by the Tram Supplier without due cause; and/or

55.1.7 the total liability of the Tram Supplier under this Agreement would be in excess of 20% of the Aggregate Tram Price, save for the application of Clause 41.6;

55.1.8 the aggregate amount of Liquidated Damages payable by the Tram Supplier would be in excess of 10% of the Aggregate Tram Price save for the application of the cap pursuant to Clause 41.25;

55.1.9 conduct by the Tram Supplier in a manner which **tie,** reasonably considers to be incompatible with the performance of the Tram Works and/or in such a manner so as to wilfully detract from the image and reputation of **tie,** CEC, Transport Edinburgh Limited, the Scottish Executive, the Scottish Ministers or any project related to the performance of the Tram Works;

TIE00899939_0156

55.1.10 any breach of Clause 52 (*Confidential Information*);

55.1.11 any failure to resolve a conflict of interest in accordance with Clause 70 (*Conflict of Interest*) to the reasonable satisfaction of **tie**;

55.2 Without prejudice to Clause 55.1, the Client may (with the prior written consent of **tie**) terminate this Agreement in respect of one or more Trams if a Certificate of Tram Delivery and Certificate of Tram Commissioning are not issued in respect of a Tram within 12 months following delivery of that Tram to the Depot. The Parties agree that in the event that there is a delay in issuing the Certificate of Tram Delivery and Certificate of Tram Commissioning which has a material adverse effect on the ability of the Tram Supplier to perform its obligations under this Agreement and:

55.2.1 which is beyond the reasonable control of the Tram Supplier; or

55.2.2 to the extent that it is directly caused by a breach by the Client or any Client Party of their respective obligations under this Agreement, the Infraco Contract or the DPOFA (as the case may be),

the 12 month period shall be extended by a reasonable period to reflect such delay.

55.3 If the Client terminates this Agreement pursuant to this Clause 55 (*Tram Supplier Default Termination*), the provisions of Clause 62 (*Payment on Termination*) and Clause 63 (*Effect of Termination or Expiry*) shall apply.

55.4 The Tram Supplier shall, in so far as is permitted by the laws of Spain and only following public disclosure of such information notify the Client of:

55.4.1 any resolution or decision by the Tram Supplier or the board of directors of the Tram Supplier or a decision by any director of the Tram Supplier to seek legal or financial advice pertaining to the solvency of the Tram Supplier; and/or

55.4.2 any presentation of any petition for the purpose of winding up the Tram Supplier or any petition for an administration order.

55.5 In the event that the Client has grounds to service notice pursuant to Clause 55.1, the Client may elect to require the Tram Supplier to provide a rectification plan within 5 Business Days of the Client serving written notice requiring the Tram Supplier to provide such plan. The Tram Supplier shall set out in the rectification plan:

TIE00899939_0157

55.5.1 the actions required to be taken by the Tram Supplier in order to achieve the sustainable rectification (measured against an agreed revised programme and production criteria over a set period) of the Tram Supplier's poor performance; and

55.5.2 any specific alternative terms or modifications to the terms of this Agreement,

such that the Tram Supplier shall not be in breach of this Agreement if it performs to this level.

55.6 The Tram Supplier shall propose the rectification plan at its cost and shall participate in good faith in discussions or negotiations held by the Client regarding the implementation of the rectification plan.

56. PERSISTENT BREACH

56.1 If a breach by the Tram Supplier of any of its obligations under this Agreement has occurred more than twice then the Client may serve a notice ("**Persistent Breach Notice**") on the Tram Supplier:

56.1.1 specifying that it is a Persistent Breach Notice;

56.1.2 giving reasonable details of the breach; and

56.1.3 stating that such breach is a breach which, if it recurs frequently or continues, may result in a termination of this Agreement.

56.2 If following service of such a Persistent Breach Notice, the breach specified has continued or occurred once again after the date falling 30 days after the date of service of such Persistent Breach Notice and before the date falling 365 days after the date of service of the Persistent Breach Notice, then the Client may serve another notice ("**Final Persistent Breach Notice**") on the Tram Supplier:

56.2.1 specifying that it is a Final Persistent Breach Notice;

56.2.2 stating that the breach specified has been the subject of a prior Persistent Breach Notice within the period of 365 days prior to the date of service of the Final Persistent Breach Notice; and

56.2.3 stating that if such failure is not remedied within 7 days or is remedied and occurs once or more within the 180 day period after the date of service of the Final Persistent Breach Notice, this Agreement may be terminated with immediate effect (but only if

TIE00899939_0158

the said Final Persistent Breach Notice given under this Clause 56.2 has been countersigned by **tie**).

56.3 If the Client terminates this Agreement pursuant to this Clause 56 (*Persistent Breach*) the provisions of Clause 62 (*Payment on Termination*) and Clause 63 (*Effect of Termination or Expiry*) shall apply.

57. CLIENT DEFAULT TERMINATION

57.1 The Tram Supplier may by notice in writing to the Client terminate this Agreement if:

57.1.1 the Client fails to pay an undisputed sum or sums due to the Tram Supplier under this Agreement which, either singly or in aggregate, exceeds 5% of the Aggregate Tram Price and such failure continues for sixty (60) days from receipt by the Client of a notice of non-payment from the Tram Supplier; or

57.1.2 the Client is in material breach of this Agreement which substantially frustrates or renders it impossible for the Tram Supplier to perform its obligations under this Agreement and if such breach is capable of remedy is not remedied by the Client within 60 days of written notice from the Tram Supplier to the Client specifying the relevant material breach,

each a ("**Client Default**"), and this Agreement shall terminate on the day falling sixty days after the day on which the Client receives the termination notice from the Tram Supplier unless the Client rectifies the Client Default within the said sixty day period.

57.2 The Tram Supplier shall not exercise, or purport to exercise, any right to terminate this Agreement (or accept any repudiation of this Agreement) except as expressly set out in this Agreement.

57.3 If the Tram Supplier terminates this Agreement pursuant to this Clause 57 (*Client Default Termination*), the provisions of Clause 62 (*Payment on Termination*) and Clause 63 (*Effect of Termination or Expiry*) shall apply.

57.4 If a termination notice is issued by the Tram Supplier in accordance with Clause 57.1, the Client and the Tram Supplier acknowledge that **tie** may elect to exercise its rights to step into this Agreement under the terms of the Tram Supply Collateral Warranty.

TIE00899939_0159

58. NO FAULT TERMINATION

58.1 The Client may at any time in its sole and absolute discretion give 30 days' written notice to the Tram Supplier to terminate this Agreement in whole or in part at any time for whatever reason (but, save where Clause 58.1.1 applies only if the said notice given under this Clause 58.1 has been countersigned by **tie**):

58.1.1 in the event that the Infraco Contract has been terminated, then the Client shall offer to novate the Tram Supply Agreement to **tie;** and

58.1.2 if **tie** have refused such novation in writing then the Client shall be entitled to terminate this Agreement.

58.2 If the Client terminates this Agreement pursuant to this Clause 58 (*No Fault Termination*) then the provisions of Clause 62 (*Payment on Termination*) and Clause 63 (*Effect of Termination or Expiry*) shall apply.

58.3 Within 60 Business Days prior to the date of expiry of the Infraco Contact or in the event that notice has been served to terminate the Infraco Contract, the Client shall offer to novate, assign or otherwise transfer this Agreement to any party identified in Clauses 58.5.1 and 58.5.2.

58.4 If **tie** have refused such novation, assignation or other transfer in writing the Client shall be entitled to terminate this Agreement in accordance with this Clause 58 (*No Fault Termination).*

58.5 If required by the Client, the Client shall offer to novate, assign or otherwise transfer the whole or any part of this Agreement as directed by **tie**, to:

58.5.1 **tie**, the Operator, the Scottish Ministers, TEL, CEC, Transport Scotland or their successors with no worse financial standing than that of **tie**; or

58.5.2 to any other person whose obligations under this Agreement are unconditionally and irrevocably guaranteed by a person falling within Clause 58.7.1.

58.6 In the case of such a novation or assignation, the Tram Supplier shall enter into a collateral warranty in favour of the Client in substantially the form set out in Schedule 10 (*Reliability Bond and Collateral Warranty).*

TIE00899939_0160

59. TERMINATION ON FORCE MAJEURE

59.1 Neither Party shall be entitled to bring a claim for a breach of obligations under this Agreement by the other Party or incur any liability to the other Party for any losses or damages incurred by that other party to the extent that a Force Majeure Event occurs and such party is directly prevented from carrying out such obligations by that Force Majeure Event, provided that such prohibition on bringing a claim and exclusion of liability shall not operate if and to the extent that:

59.1.1 the Affected Party could, by the exercise of reasonable foresight and diligence, have prevented or reduced the effect of the Force Majeure Event; and

59.1.2 the Affected Party could, whether before or after the occurrence of the Force Majeure Event, have reduced or eliminated the resulting breach of its obligations under this Agreement by taking reasonable steps.

59.2 On the occurrence of a Force Majeure Event, the Affected Party shall notify the other Party as soon as reasonably practicable, specifying details of the Force Majeure Event and providing evidence of its effect on the obligations of the Affected Party and any action proposed to remove or mitigate its effect.

59.3 The Parties shall enter into bona fide discussions with a view to alleviating and removing the effects of such Force Majeure Event as soon as reasonably practicable, and if the terms or measures to remove the effect of the Force Majeure Event cannot be agreed on or before the date falling 12 months after the date of the commencement of the Force Majeure Event or by the end of such longer period as the Parties may have agreed, or such Force Majeure Event is continuing or its consequence remains such that the Affected Party is unable to comply with all or a material part of its obligations under this Agreement for a period of more than 12 months after the date of the commencement of the Force Majeure Event or by the end of such longer period as the Parties may have agreed, either Party shall have the option to terminate this Agreement by written notice to the other.

59.4 The Parties shall at all times following the occurrence of a Force Majeure Event use all reasonable endeavours to prevent and mitigate the effects of any delay to the performance of the Tram Works and the Tram Supplier shall at all times during which a Force Majeure Event is subsisting take all steps in accordance with Good Industry Practice to overcome or minimise the consequences of the Force Majeure Event.

TIE00899939_0161

59.5 The Affected Party shall notify the other party as soon as reasonably practicable after the Force Majeure Event ceases or no longer causes the Affected Party to be unable to comply with its obligations under this Agreement. Following such notification, this Agreement shall continue to be performed on the terms existing immediately prior to the occurrence of the Force Majeure Event.

59.6 If this Agreement is terminated pursuant to this Clause 59 (*Termination on Force Majeure*) then the provisions of Clause 62 (*Payment on Termination*) and Clause 63 (*Effect of Termination or Expiry*) shall apply.

60. TERMINATION FOR CORRUPT GIFTS AND FRAUD

60.1 The Tram Supplier or anyone employed by it or acting on its behalf (including any Tram Supplier Party) shall not commit any Prohibited Act.

60.2 If the Tram Supplier, or anyone employed by it or acting on its behalf (including any Tram Supplier Party) commits any Prohibited Act, then the Client shall be entitled to act in accordance with Clauses 60.3 to 60.7.

60.3 If a Prohibited Act is committed by the Tram Supplier or by an employee of the Tram Supplier not acting independently of the Tram Supplier, then the Client may terminate this Agreement by giving notice to the Tram Supplier.

60.4 If a Prohibited Act is committed by an employee of the Tram Supplier acting independently of the Tram Supplier, then the Client may give notice to the Tram Supplier of termination and this Agreement will terminate, unless within 30 days of receipt of such notice the Tram Supplier terminates that employee's employment and (if necessary) procures the performance of the relevant obligations by another person.

60.5 If a Prohibited Act is committed by anyone acting on behalf of the Tram Supplier (excluding employees of the Tram Supplier, but including any Tram Supplier Party and their employees) and not acting independently of the Tram Supplier, then the Client may give notice to the Tram Supplier of termination and this Agreement shall terminate.

60.6 If a Prohibited Act is committed by anyone acting on behalf of the Tram Supplier (excluding employees of the Tram Supplier but including any Tram Supplier Party, and their employees) and acting independently of the Tram Supplier, then the Client may give notice to the Tram Supplier of termination and this Agreement will terminate unless within 30 days of receipt of such notice given under this Clause 60.6, the Tram Supplier terminates that party's employment and procures the performance of the relevant obligations by another person.

TIE00899939_0162

60.7 Any notice of termination under this Clause 60 (*Termination for Corrupt Gifts and Fraud*) shall specify:

60.7.1 the nature of the Prohibited Act;

60.7.2 the identity of the person whom the Client believes has committed the Prohibited Act; and

60.7.3 the date on which this Agreement will terminate, in accordance with the applicable provision of this Clause 60 (*Termination for Corrupt Gifts and Fraud*).

60.8 If this Agreement is terminated pursuant to this Clause 60 (*Termination for Corrupt Gifts and Fraud*) the provisions of Clause 62 (*Payment on Termination*) and Clause 63 (*Effect of Termination or Expiry*) shall apply.

61. RISK MANAGEMENT

61.1 The Tram Supplier shall comply with the requirements of Schedule 15 (*Risk Management*).

62. PAYMENT ON TERMINATION

62.1 Where the Client terminates this Agreement pursuant to Clauses 55 (*Tram Supplier Default Termination*), 56 (*Persistent Breach*) or 60 (*Termination for Corrupt Gifts and Fraud*) the Tram Supplier shall, subject to Clause 41 (*Liability, Indemnities, Retention and Liquidated Damages*), be liable to the Client and shall indemnify the Client for all Losses suffered by the Client and claims brought against the Client as a result of such termination and the circumstances or events giving rise to the same.

62.2 No compensation shall be payable by the Client to the Tram Supplier for termination of this Agreement whether under contract, delict (including negligence), breach of (or compliance with) statutory duty, restitution or otherwise but without prejudice to payments due under Clause 62.3.4.

62.3 Within 35 Business Days of termination of this Agreement and following receipt of a valid VAT invoice, the Client shall pay to the Tram Supplier:

62.3.1 any undisputed sums due from the Client to the Tram Supplier pursuant to Clause 38 (*Price and Payment*);

62.3.2 any entitlement to demobilisation costs pursuant to Clause 62.3.4; and

TIE00899939_0163

62.3.3 where this Agreement is terminated pursuant to Clause 54 (*Suspension of Work*), Clause 57 (*Client Default Termination*) or Clause 58 (*No Fault Termination*) any amount in respect of any of the Tram Supplier's work in progress under this Agreement, provided that the calculation of such sums have been certified as follows:

62.3.3.1 the Tram Supplier shall have provided the Client with a valuation of all work in progress, including any demonstrable committed costs, in relation to the Tram Works, such valuation shall discount any payments already made in respect of such work; In addition to the forgoing the Tram Supplier shall be entitled to recover loss of profit fixed at 19% with reference to demobilisation costs; and

62.3.3.2 the Client shall, subject to any clarifications as are in the Client's opinion (acting properly and reasonably) necessary certify by notice in writing to the Tram Supplier that part of the work in progress which is approved by the Client and give reasons why any part of the work in progress has not been certified and the value of the sums involved no later than 10 Business Days after the date on which such valuation was received.

62.3.4 The Client shall make payment to the Tram Supplier of any demobilisation costs which have been demonstrably and reasonably incurred by the Tram Supplier in respect of:

62.3.4.1 termination for Client Default pursuant to Clause 57 (*Client Default Termination*); or

62.3.4.2 termination for No Fault Termination pursuant to Clause 58 (*No Fault Termination*);or

62.3.4.3 termination pursuant to Clause 54 (*Suspension of Work*).

62.4 The Tram Supplier shall use all reasonable endeavours to minimise and mitigate any demobilisation costs payable pursuant to Clause 62.3.4 and the Client shall not be liable to pay the Tram Supplier for such demobilisation costs to the extent that:

62.4.1 the Tram Supplier has failed to minimise or mitigate such demobilisation costs;

62.4.2 such demobilisation costs have arisen out of the Tram Supplier's breach of this Agreement or any negligent or wilful act or omission by the Tram Supplier; or

TIE00899939_0164

62.4.3 such demobilisation costs relate to any costs incurred by the Tram Supplier prior to the Works Commencement Date, other than those incurred solely in respect of the Pre Works Development Services, unless such costs were incurred with the prior written agreement of the Client;

62.5 If the Tram Supplier is obliged by this Agreement to pay to the Client any payment in respect of termination of this Agreement under this Clause 62 (*Payment on Termination*), the Tram Supplier shall pay the amount due thereunder to the Client within 35 Business Days of the Termination Date.

62.6 When the Client and the Tram Supplier agree or it is determined that the Client shall pay to the Tram Supplier any payment in respect of termination of this Agreement, under this Clause 62 (*Payment on Termination*), it shall pay such amount within 35 days of the Termination Date.

63. EFFECT OF TERMINATION OR EXPIRY

63.1 On termination or expiry of this Agreement, the Client shall be entitled in its sole and absolute discretion to:

63.1.1 take possession of all work-in-progress (including all Trams allocated to this Agreement and parts therefor) and use of all jigs and tools used solely in respect of the Trams and for that purpose to enter on to any premises of the Tram Supplier (and of any Sub-contractor or agent of the Tram Supplier) to take possession of such work-in-progress, jigs and tools with a view to **tie** and/or the Client being able to re-contract with a third party for the completion of the Trams;

63.1.2 be assigned all agreements relating to the Tram Works entered into between the Tram Supplier and its Sub-contractors;

63.1.3 be assigned any assignable warranties which have been given to the Tram Supplier by any Sub-contractor to the Tram Supplier by any manufacturer of any part of the Trams and to give notice to any such other party of any such assignation (in respect of which the Tram Supplier undertakes to assist in enforcing any rights thus arising);

63.1.4 continue to use all relevant Intellectual Property Rights in accordance with Clause 51 (*Copyright and Intellectual Property*) provided that the Client may in those circumstances purchase a Spare Part or Special Tool from a party other than the Tram Supplier without any requirement to seek to purchase the same from the Tram Supplier (whether further to Clause 34 (*Spares and Special Tools*) or otherwise) and

TIE00899939_0165

without any restriction (whether the restriction is set out in Clause 34 (*Spares and Special Tools*) or otherwise); and

63.1.5 reject one or more of the Trams, whether or not:

63.1.5.1 such Tram or Trams have been or are in the process of being delivered to the Depot;

63.1.5.2 a Certificate of Tram Delivery has been issued in respect of such Tram or Trams; or

63.1.5.3 a Certificate of Tram Commissioning has been issued in respect of such Tram or Trams,

and notwithstanding any other provision of this Agreement (including, for the avoidance of doubt, Clause 41.6) recover from the Tram Supplier the Tram Price in respect of such rejected Trams;

63.2 On termination or expiry of this Agreement, the Client shall be relieved from any obligation to accept delivery of any further Trams at the date of such notice; and

63.3 On termination or expiry of this Agreement, the Tram Supplier shall make available to the Client and/or **tie** all Tram Documentation relating to the Trams.

63.4 On termination or expiry of this Agreement in whole, the obligations of the Parties shall cease except for:

63.4.1 any obligations arising as a result of any antecedent breach of this Agreement;

63.4.2 Clauses 1 (*Definitions and Interpretations*), 33 (*Tram Documentation*), 34 (*Spares and Special Tools*), 35.1 and 36 (*Warranty Regime*), 38 (*Price And Payment*), 39 (*VAT*), 41 (*Liability, Indemnities, Retention and Liquidated Damages*), 43 (*Mitigation*), 51 (*Copyright and Intellectual Property*), 52 (*Confidential Information*), 63 (*Effect of Termination or Expiry*), 64 (*Dispute Resolution*) and 80 (*Third Party Rights*) and under any other provision of this Agreement which is expressed to survive termination or which is required to give effect to such termination or the consequences of termination;

63.4.3 the Warranties and Liquidated Damages in relation to any Trams which have been delivered; and

TIE00899939_0166

63.4.4 any other obligations which give effect to such termination or to the consequences of such termination or which otherwise apply (expressly or by implication) on or after such termination or expiry.

63.5 Upon termination of this Agreement in part, only those obligations directly relating to such part of this Agreement that has been terminated shall cease.

64. DISPUTE RESOLUTION

64.1 The Parties agree that any Dispute shall be dealt with in accordance with the provisions set out in Schedule 13 (*Dispute Resolution Procedure*).

65. DEROGATIONS

65.1 The Tram Supplier shall not, without the prior written consent of the Client's Representative, apply for any exemption or derogation from or dispensation under any applicable Law which would otherwise apply to the Tram Works and including, without limitation, any exemption order under Section 47(3) of the Disability Discrimination Act 1995 or dispensations under the provisions of Section 10 of the Railways and Other Passenger Transport Systems (Approval of Works, Plant and Equipment) Regulations 1994 or any provisions which may replace, modify or supersede such provisions.

66. VARIATIONS TO BE IN WRITING

66.1 No variation or alteration of any of the provisions of this Agreement shall be effective unless it is in writing and signed by both Parties.

67. WAIVER AND CUMULATIVE REMEDIES

67.1 Save where expressly stated, no failure or delay by either Party to exercise any right or remedy in connection with this Agreement will operate as a waiver of it or of any other right or remedy nor will any single or partial exercise preclude any further exercise of the same, or of some other right or remedy. A waiver of any breach of this Agreement shall not be deemed to be a waiver of any subsequent breach.

67.2 The Parties agree that no waiver shall occur or be deemed to have occurred unless or until a clear and unequivocal express waiver of a clearly identified default is contained in a written notice by the waiving Party to the other Party expressly for the purpose of effecting such waiver.

MR

TIE00899939_0167

67.3 The Parties' rights and remedies under this Agreement are, except where provided otherwise in this Agreement, independent, cumulative and do not operate to exclude one another or any rights or remedies provided by Law.

67.4 Neither Party shall be entitled to recover compensation or make a claim under this Agreement in respect of any loss that it has incurred to the extent that it has already been compensated in respect of that loss pursuant to this Agreement or otherwise.

68. NOTICES

68.1 Any notice or notification required or authorised to be given under this Agreement by one Party to the other shall be:

68.1.1 in writing;

68.1.2 sent by one of the following methods:

68.1.2.1 pre-paid special or recorded delivery post or facsimile transmission addressed to the Party to which it is given at:

(a) in the case of notices given to the Client: **tie** limited, Citypoint, 65 Haymarket Terrace, Edinburgh, EH12 5HD, fax number 0131 622 8301, attention: Tram Project Director, or such other address or fax number in the United Kingdom as the Client may notify the Tram Supplier from time to time for that purpose; or

(b) Construcciones Y Auxiliar de Ferrocarriles S.A. (CAF) address, J.M. Iturrioz 26, 20200 Beasain (Guipuzcoa) – Spain fax number, 00 34 943 189211 attention the Edinburgh Tram Project Manager or such other address or fax number in the United Kingdom as the Tram Maintainer may notify the Client from time to time for that purpose; or

68.1.2.2 facsimile transmission addressed to the Client's Representative or the Tram Supplier's Representative (as appropriate) at a facsimile number notified to the giving Party by the receiving Party for the service of notices under this Agreement from time to time; or

68.1.2.3 personal delivery into the hands of:

(a) in the case of notices given to the Client, the Client's Representative;

TIE00899939_0168

or

(b) in the case of notices given to the Tram Supplier, the Tram Supplier's Representative.

68.1.3 be deemed duly served:

68.1.3.1 if sent by pre-paid special or recorded delivery post, on proof of delivery; or

68.1.3.2 if sent via facsimile transmission or personal delivery, on the day of issue of the relevant fax confirmation receipt or such personal delivery (as appropriate), unless that day is not a Business Day or such delivery or transmission is made after 5.00 pm on a Business Day in which case it shall be deemed duly served on the next Business Day thereafter.

69. ASSIGNATION, CHANGES IN LEGAL STATUS, CHANGES IN CONTROL AND SUB-CONTRACTING

69.1 The Tram Supplier shall not assign, novate or otherwise transfer the whole or any part of this Agreement without the prior written agreement of the Client.

69.2 In addition to and without prejudice to the provisions of Clause 5 (*Novation*) and the Tram Supply Novation Agreement to be entered into in accordance with Clause 5 (*Novation*), the Client shall be entitled to assign, novate or otherwise transfer the whole or any part of this Agreement:

69.2.1 to the Scottish Ministers, TEL, CEC, Transport Scotland or any local authority; or

69.2.2 to any body with no worse financial standing than that of **tie** who takes over all or substantially all of the functions of **tie**; or

69.2.3 to any other person whose obligations under this Agreement are unconditionally and irrevocably guaranteed (in a form reasonably acceptable to the Tram Supplier acting reasonably) by **tie** or a person falling within Clause 69.2.1; or

69.2.4 to the Operator; or

69.2.5 with the prior written consent of the Tram Supplier (such consent not to be unreasonably withheld or delayed) to any person not covered by Clauses 69.2.1, 69.2.2, 69.2.3 or 69.2.4 whose on-going financial standing is no worse than **tie**.

69.3 If the legal status of the Tram Supplier shall change in any material way, the Client shall be informed by the Tram Supplier in writing, immediately.

69.4 If there is a Change in Control in the Tram Supplier, the Client shall be informed immediately by the Tram Supplier in writing.

69.5 The Tram Supplier shall not sub-contract the whole of the Tram Works and shall not without the prior written consent of the Client (such consent not to be unreasonably withheld or delayed) sub-contract any part of the Tram Works.

69.6 The Tram Supplier shall procure that any Sub-contractor employed by the Tram Supplier shall, provide and employ in connection with the execution of the Tram Works only such technical assistants as are skilled, experienced and assessed as competent for undertaking a specified range of activities in their respective occupations and, as appropriate, such sub-agents, foremen and leading hands as are competent to give proper supervision to the work they are required to supervise and such skilled, semi-skilled and un-skilled labour as is necessary for the proper and timely execution of the Tram Works.

69.7 The Client's Representative shall have the right after due warning in writing to require the Tram Supplier to remove from the Edinburgh Tram Network any Sub-contractor or employee of such Sub-contractor who misconducts itself or is incompetent or negligent in the performance of its duties of fails to conform with any particular provisions with regard to safety which may be set out in this Agreement or persists in any conduct which is prejudicial to health and safety and such Sub-contractor and/or employee of such Sub-contractor shall not be again employed upon the Tram Works without permission of the Client's Representative.

69.8 The Tram Supplier shall in respect of any part of the Tram Works in respect of which the Tram Requirements Specification expressly states that a Sub-Contractor Direct Agreement will be required from a supplier in respect of which the Client shall as a condition of giving its consent to the sub-contracting of an element of the Tram Works, require the relevant Sub-contractor to enter into a Sub-Contractor Direct Agreement with the Client and **tie** within 2 months of the Effective Date, and in respect of any other Sub-contractor if so requested by the Client at any time, the Tram Supplier shall use all reasonable endeavours to ensure that such Sub-contractor enters into a Sub-Contractor Direct Agreement with the Client and **tie**.

69.9 The Client may withhold its consent relating to issues including but not limited to:

69.9.1 any sub-contract or assignation where the proposed Sub-contractor or assignee:

69.9.1.1 is not in the Client's opinion appropriately qualified and experienced in and/or

TIE00899939_0170

accredited for the purposes of carrying out work of the scope, type and complexity to that required in carrying out that part of the Tram Works to be sub-contracted to it; or

69.9.1.2 has not entered into a Sub-contractor Direct Agreement with the Client and **tie** pursuant to Clause 69.8; or

69.9.1.3 is not approved by the Independent Competent Person;

69.9.2 any sub-contract or assignation where the proposed assignee or Sub-contractor is not in the Client's absolute opinion of suitable financial standing.

69.10 The appointment or authorisation by the Tram Supplier of any Sub-contractor, agent, officer or employee and/or any consent given by the Client to any Sub-contractor, agent, officer or employee, shall not relieve the Tram Supplier of any obligation under this Agreement, and the acts of and omissions of any such Sub-contractor, agent, officer or employee shall, for the purposes of this Agreement, be deemed to be the acts or omissions of the Tram Supplier.

69.11 The Tram Supplier shall provide sufficient superintendence to ensure that the work to be carried out by Sub-Contractors will comply with the requirements of this Agreement and applicable Laws.

69.12 Any application to the Client for consent pursuant to Clauses 69.5 shall be in writing and shall be sent to the address set out in Clause 68 *(Notices)*.

70. CONFLICT OF INTEREST

70.1 The Tram Supplier shall (and shall procure that the Tram Supplier Parties shall):

70.1.1 be responsible for ensuring that no conflict of interest arises in respect of its duties under this Agreement;

70.1.2 make all possible enquiries to ensure that there is no conflict of interest prior to its assuming the duties required of it under the terms of this Agreement; and

70.1.3 consult and advise the Client if the Tram Supplier considers that a conflict of interest arises or if he considers that a conflict of interest may exist or may arise or may be foreseeable and shall furnish the Client with such information as shall enable the Client to determine whether or not a conflict of interest has arisen.

TIE00899939_0171

71. SECURITY INTERESTS

71.1 The Tram Supplier shall not create or agree to create any Security Interest over any Assets or over this Agreement.

71.2 The Tram Supplier shall not dispose of any right in respect of or interest in any Asset used in the Tram Works or relating to the Edinburgh Tram Network if to do so would have a material adverse effect upon either the Edinburgh Tram Network, the rights in the Assets held by CEC, the position of **tie**, or the position of the Client under this Agreement, whether or not this Agreement has terminated or expired provided always that restrictions in this Clause 71 (*Security Interests*) shall not apply in the case of:

71.2.1 disposals of redundant or obsolete assets not required for the Edinburgh Tram Network provided that the Client has procured **tie's** and CEC's consent to such disposal, and CEC receives any proceeds associated with such disposal; or

71.2.2 disposals of property or assets where such property or assets are replaced by other property or assets comparable or superior as to type and function.

72. DATA PROTECTION

72.1 For the purpose of this Clause 72 (*Data Protection*), the term "personal data" shall have the meaning given to it in the Data Protection Act 1998.

72.2 In so far as is applicable to its obligations pursuant to this Agreement, the Tram Supplier shall, in relation to any personal data relating to the performance of the Tram Works in respect of which it is either the "data controller" or the "data processor" for the purposes of the Data Protection Act 1998, comply with the obligations of a "data controller" under the provisions of the seventh data protection principle as set out in schedule 1 of that Act. In addition, the Tram Supplier:

72.2.1 shall have at all material times (and shall use its reasonable endeavours to procure that all the Tram Supplier Parties have or will have at all material times) the appropriate technical and organisational measures in place against unauthorised or unlawful processing of personal data and against accidental loss or destruction of, or damage to, personal data held or processed by it;

72.2.2 shall (and shall use its reasonable endeavours to procure that the Tram Supplier Parties shall) take at all material times, all reasonable steps to ensure the integrity of any of its staff with access to personal data processed in connection with the Tram Works;

TIE00899939_0172

72.2.3 shall act only on the instructions of the Client or **tie** in relation to the processing of any personal data in respect of which the Client or **tie** is the "data controller" for the purposes of that Act;

72.2.4 shall only obtain, hold, process, use, store and disclose such personal data as is necessary to perform its obligations under this Agreement; and

72.2.5 shall allow the Client, or **tie** access to any relevant premises on reasonable notice to inspect its procedures referred to in Clause 72.2.1, This access shall be duly justified by the Client.

73. ENTIRE AGREEMENT

73.1 Except where expressly provided otherwise in this Agreement, this Agreement constitutes the entire agreement between the Parties in connection with its subject matter and supersedes all prior representations, communications, negotiations and understandings concerning the subject matter of this Agreement.

73.2 Each of the Parties confirms to the other that it has neither been induced to enter into this Agreement in reliance on, nor has it made, any representation or warranty except those contained or referred to in this Agreement.

73.3 Any representations or warranties other than those contained or referred to in this Agreement are superseded and extinguished by this Agreement.

73.4 Each Party irrevocably and unconditionally waives all rights and remedies which it might otherwise have had in relation to any representations or warranties other than those contained or referred to in this Agreement save in respect of any fraudulent misrepresentation.

74. CONSENT AND APPROVAL

74.1 The giving of any consent or approval by or on behalf of **tie** or the Client shall not in any way relieve the Tram Supplier of any of its obligations under this Agreement or of its duty to ensure the correctness, accuracy or suitability of the matter or thing which is the subject of the consent or approval.

74.2 Failure by **tie** or the Client to disapprove or object to any matter or thing shall not prejudice its power subsequently to take action under this Agreement in connection therewith.

TIE00899939_0173

75. DISCRIMINATION

75.1 The Tram Supplier shall not (and the Tram Supplier shall insert a clause to this effect in each contract with any Tram Supplier Party) unlawfully discriminate within the meaning and scope of the provisions of the Equal Pay Act 1970, the Sex Discrimination Act 1975, the Employment Rights Act 1996, the Working Time Regulations 1998, the Part-Time Workers (Prevention of Less Favourable Treatment) Regulations 2000, the Fixed Term Employees (Prevention of Less Favourable Treatment) Regulations 2002, the Race Relations Act 1976, the Disability Discrimination Act 1995, the Employment Equality (Sexual Orientation) Regulations 2003 and the Employment Equality (Religion or Belief) Regulations 2003 and the Employment Equality (Age) Regulations 2006.

76. FURTHER ASSURANCE

76.1 Each Party shall at the reasonable request and cost of the other (save where it is expressly provided that the cost of such act or execution shall be for that Party's account) do any act or execute any document that may be necessary to give full effect to this Agreement.

77. APPLICABLE LAW

77.1 This Agreement, any document completed or to be completed in accordance with its provisions and any matter arising from this Agreement or any such document shall be governed by and construed in accordance with Scots law.

77.2 Subject to Clause 64 (*Dispute Resolution*), the Parties hereby irrevocably submit to the exclusive jurisdiction of the Court of Session in relation to this Agreement, any such document and any such matter.

78. NO PARTNERSHIP OR AGENCY

78.1 Nothing in this Agreement shall be construed as creating a partnership between the Client and the Tram Supplier.

78.2 The Tram Supplier shall not (and shall procure that the Tram Supplier Parties shall not) act or purport to act as agent for **tie** and/or the Client in relation to any matter unless specifically authorised in writing under this Agreement by the Client. The Tram Supplier shall not be entitled to bind **tie** and/or the Client in any way or to create any liability or cause of action against **tie** and/or the Client and shall not hold itself out (and shall procure that no Tram Supplier Party shall hold itself out) as having any such authority or power

TIE00899939_0174

79. INVALID TERMS

79.1 If any term of this Agreement shall be held to any extent to be invalid, unlawful or unenforceable:

79.1.1 that term shall to that extent be deemed not to form part of this Agreement; and

79.1.2 the validity and enforceability of the remainder of this Agreement shall not be affected.

79.2 Without prejudice to any other terms of this Agreement, the Parties shall promptly consult in good faith with a view to agreeing as soon as reasonably practicable one or more provisions in lieu of the invalid provision such as will, so far as is possible under any applicable Law, have the same commercial effect as the invalid provision would have had if it had not been invalid, unlawful or unenforceable.

80. THIRD PARTY RIGHTS

80.1 Subject to Clause 35 (*Risk and Title*) and Clause 51.2.2 creating rights in favour of CEC and **tie** and any other express provision of this Agreement, a person who is not party to this Agreement shall have no right to enforce any term of this Agreement and there shall not be created any ius quaesitum tertio in favour of any party whatsoever.

TIE00899939_0175

IN WITNESS WHEREOF these presents consisting of this and the 167 preceding pages together with Schedules 1 to 23 (inclusive) which are annexed and signed as relative hereto are executed as follows:

EXECUTED for and on behalf of **TIE LIMITED**

at EDINBURGH

on 13 MAY 2008 by:

Authorised Signatory [redacted]

Full Name WILLIE GALLAGHER

Witness Signature [redacted]

Full Name ALASTAIR RICHARDS

Address [redacted]

EXECUTED for and on behalf of
CONSTRUCCIONES Y AUXILIAR DE FERROCARRILES S.A. (CAF)

at EDINBURGH

on 13 MAY 2008 by:

Authorised Signatory [redacted]

Full Name [redacted] JESUS ESNAOLA

Witness Signature [redacted]

Full Name ANTONIO CAMPOS

Address [redacted] Spain

TIE00899939_0176

This is Schedule 1 referred to in the foregoing Tram Supply Agreement between tie Limited and Construcciones Y Auxiliar de Ferrocarriles S.A. (CAF)

SCHEDULE 1

CONDITIONS PRECEDENT

PART 1: COMMENCEMENT CONDITIONS PRECEDENT

Delivery to the Client, in form and substance satisfactory to the Client (acting reasonably) of the documents listed below. Where listed as a duly certified copy, the document is to be certified by the company secretary of the Tram Supplier as being a true copy, in full force and effect:

1.1 a copy, duly certified, of its certificate of incorporation (or equivalent) and of any certificate of incorporation on change of name (or equivalent) or certificate of re-registration as a public company (or equivalent) related to it;

1.2 a copy, duly certified, of its memorandum and articles of association (or equivalent constitutional documents);

1.3 a copy, duly certified, of minutes of a meeting of its board of directors, or any other owners, representatives, committee or board entitled to bind the Tram Supplier to the terms of the Tram Supply Agreement:

1.3.1 evidencing all necessary approvals on behalf of the Tram Supplier to the execution, delivery and performance by the Tram Supplier of the Tram Supply Agreement and all documents to be executed by the Tram Supplier pursuant to the Tram Supply Agreement;

1.3.2 authorising a specified person to execute the Tram Supply Agreement, all documents to be executed by the Tram Supplier pursuant to the Tram Supply Agreement and to approve any amendments to the draft of the Tram Supply Agreement and to all documents to be executed by the Tram Supply pursuant to the Tram Supply Agreement;

1.3.3 authorising the Tram Supplier's Representative to sign and despatch all notices and other communications required or permitted to be given by the Tram Supplier under the Tram Supply Agreement and all documents to be executed by the Tram Supplier pursuant to the Tram Supply Agreement; and

1.3.4 authorising the Tram Supplier's Representative to sign and despatch all notices and other communications required or permitted to be given by the Tram Supplier under the Tram Supply Agreement and all documents to be executed by the Tram Supplier pursuant to the Tram Supply Agreement;

TIE00899939_0177

1.4 evidence that all insurances to be taken out under the Tram Supply Agreement and be in force from the Effective Date have been effected on the Effective Date and that the relevant policies comply with the requirements of the Tram Supply Agreement and provision of copies of the certificates of insurance and policy documents for the insurances specified in the Tram Supply Agreement;

1.5 duly executed Subcontractor Direct Agreements in respect of the Tram Works from key Sub-Contractors, or undertakings that such Subcontractor Direct Agreements will be provided within 2 months of the Effective Date;

1.6 Legal Opinions in respect of the powers and capacity of the Tram Supplier to enter into this Tram Supply Agreement.

TIE00899939_0178

PART 2: CONDITIONS PRECEDENT DOCUMENTS

(1) TIE LIMITED

- and -

(2) BILFINGER BERGER (UK) LIMITED

- and -

(3) SIEMENS plc

-and-

(4) CONSTRUCCIONES Y AUXILIAR DE FERROCARRILES S.A. (CAF)

NOVATION OF A TRAM SUPPLY AGREEMENT

in respect of

EDINBURGH TRAM NETWORK

TIE00899939_0179

AGREEMENT

AMONG

(1) **tie LIMITED** (company number SC230949) whose registered office is at City Chambers, High Street, Edinburgh, Midlothian, EH1 1YJ ("**tie**");

(2) **BILFINGER BERGER UK LIMITED**, a company incorporated in England and Wales under number 02418086 and having its registered office at 150 Aldersgate Street, London EC1A 4EJ which expression shall include its successors, permitted assignees and transferees; and

(3) **SIEMENS PLC**, a company incorporated in England and Wales under number 00727817 and having its registered office at Faraday House, Sir William Siemens Square, Frimley, Camberley, Surrey GU16 8QD which expression shall include its successors, permitted assignees and transferees,

(Bilfinger Berger UK Limited and Siemens plc together the "**Infraco**" and each separately an "**Infraco Member**"); and

(4) **CONSTRUCCIONES Y AUXILIAR DE FERROCARRILES S.A. (CAF),** a company registered in Spain in the Corporate Register of Guipuzcoa: volume 983, sheet 144, page number SS-329, entry 239 and having its registered office at J.M. Iturrioz 26, 20200 Beasain (Guipuzcoa), Spain ("**Tramco**");

BACKGROUND

A By an agreement in writing dated ◆ . 2008 ("**Tram Supply Agreement**") **tie** appointed Tramco to design, manufacture and supply Trams and to supply documentation and associated equipment in connection with the Edinburgh Tram Network. A copy of the Tram Supply Agreement is attached to this Agreement and initialled by the parties for the purpose of identification. This Agreement is supplemental to the Tram Supply Agreement.

B **tie** and Infraco have entered into a contract ("**Infraco Contract**") under which Infraco has been appointed to carry out and/or manage the design, construction, installation, commissioning, tram procurement, system integration, infrastructure maintenance, tram maintenance and supply of related equipment and materials, trams and related infrastructure in respect of the Edinburgh Tram Network.

TIE00899939_0180

C **tie** and Infraco have agreed, with the consent of Tramco, that Infraco shall take over the rights and liabilities of the "Client" (as defined in the Tram Supply Agreement) under the Tram Supply Agreement and that Tramco shall owe all of the duties and obligations arising thereunder to Infraco by novating the Tram Supply Agreement from **tie** to Infraco upon and subject to the terms of this Agreement.

D **tie** wishes to be released from the Tram Supply Agreement and Tramco has agreed to release **tie**.

1. DEFINITIONS AND INTERPRETATION

1.1 The definitions given in the recitals to this Agreement apply to this Agreement.

1.2 In this Agreement the following additional words and expressions shall have the meanings set out opposite to them:

"**Effective Date**" means the last date of execution of this Agreement."

1.3 Clause headings in this Agreement are for the convenience of the parties only and do not affect its interpretation.

1.4 Unless otherwise defined hereunder, where the Tram Supply Agreement defines a meaning to any capitalised word or expression used in this Agreement, the same meaning shall be given to it in this Agreement.

2. RELEASE BY TRAMCO OF tie

2.1 Tramco releases and discharges **tie** from any and all duties, obligations and liabilities owed to Tramco under the Tram Supply Agreement and accepts the liability of Infraco under the Tram Supply Agreement in lieu of **tie**.

3. RELEASE BY tie OF TRAMCO

3.1 **tie** releases and discharges Tramco from the further performance of Tramco's duties and obligations under the Tram Supply Agreement.

4. ACCEPTANCE OF LIABILITY BY TRAMCO TO THE INFRACO

4.1 Tramco undertakes to Infraco to continue to perform all the duties and to discharge all the obligations of Tramco under the Tram Supply Agreement and to be bound by its terms and conditions in every way as if Infraco was and always had been a party to the Tram Supply Agreement in place of **tie**.

TIE00899939_0181

4.2 Tramco warrants to Infraco that, in respect of the duties and obligations which it has already performed under the Tram Supply Agreement, it has performed those duties and obligations in accordance with the standards of skill and care set out in the Tram Supply Agreement and otherwise in compliance with all of the terms and conditions thereof. Tramco warrants to Infraco that it shall be liable for any loss or damage suffered or incurred by Infraco arising out of any negligent act, default or breach by Tramco in the performance of its obligations under the Tram Supply Agreement prior to the Effective Date. Tramco shall be liable for such loss or damage notwithstanding that such loss or damage would not have been suffered or incurred by **tie** (or suffered or incurred to the same extent by **tie**).

4.3 Without prejudice to Clauses 4.2 or 4.4, Tramco shall not contend under this Agreement that its liability to Infraco is affected or diminished by reason of **tie** having suffered no loss and/or any loss claimed to have been suffered by Infraco being different in character from that suffered by **tie**.

4.4 Tramco confirms it was aware at the time of entering into the Tram Supply Agreement that Infraco could suffer losses, damages, costs, expenses, claims, demands and proceedings as a result of Tramco's breach of the Tram Supply Agreement.

4.5 Without prejudice to the generality of this Agreement, Tramco warrants and undertakes to Infraco that its duties and obligations under, the Tram Supply Agreement, whether required to be performed prior to the date hereof, have been and will be performed in accordance with the Tram Supply Agreement.

4.6 Tramco acknowledges that any breach of the warranties in this Agreement may cause Infraco to be in breach of the Infraco Contract and/or cause Infraco to suffer loss and/or damage.

4.7 The liability of Tramco to Infraco pursuant to the Tram Supply Agreement as novated by this Agreement (both in respect of the period prior to the Effective Date and after the Effective Date) shall not be affected by Infraco's assumption of liability to **tie** in respect of the Edinburgh Tram Network pursuant to the Infraco Contract.

4.8 Tramco acknowledges that Infraco has and shall continue to rely upon all Tram Works provided by Tramco under the Tram Supply Agreement as novated by this Agreement.

4.9 For the avoidance of doubt, in accordance with Clause 41.2 of the Tram Supply Agreement save where expressly provided for in the Tram Supply Agreement, nothing in this Agreement shall expose either Party to the application of Indirect Loss.

5. VESTING OF REMEDIES AGAINST TRAMCO

All rights of action and remedies against Tramco under and pursuant to the Tram Supply Agreement vested in **tie** (including their accrued rights of action and remedies) shall automatically and without the need for any further action on the part of Infraco, vest in Infraco with effect from the Effective Date.

6. ACCEPTANCE OF LIABILITY BY INFRACO

With effect from the Effective Date Infraco undertakes to perform all the duties and to discharge all the obligations of **tie** under the Tram Supply Agreement as novated by this Agreement and to be bound by its terms and conditions in every way as if Infraco was and always had been a party to the Tram Supply Agreement in place of **tie** and as if all acts and omissions of **tie** under or pursuant to the Tram Supply Agreement prior to the Effective Date were the acts and omissions of Infraco.

7. VESTING OF REMEDIES AGAINST tie

As from the Effective Date, all rights of action and remedies under or pursuant to the Tram Supply Agreement vested in Tramco shall lie against Infraco and not **tie** whether or not such rights of action or remedies may have arisen prior to, on or after the Effective Date.

8. ACKNOWLEDGEMENT OF PAYMENT

Tramco acknowledges that all payments properly due to Tramco under the Tram Supply Agreement up to the Effective Date have been paid by **tie** (subject to confirmation of pending payments and the assurance that the Tramco will not suffer payment delays due to the novation process).

9. AMENDMENT OF TRAM SUPPLY AGREEMENT

tie, Tramco and Infraco agree that the terms of the Tram Supply Agreement shall be and are varied in the manner set out in Appendix 1 to this Agreement.

10. AFFIRMATION OF TRAM SUPPLY AGREEMENT

The terms and conditions of this Agreement represent the entire agreement between the parties relating to the novation of the Tram Supply Agreement and, except as specifically amended by Appendix 1 of this Agreement, all the terms and conditions of the Tram Supply Agreement remain in full force and effect. **tie** hereby confirms that it has not exercised any rights and discretions in regard to the Tram Supply Agreement prior to the point of novation.

TIE00899939_0183

11. EQUIVALENT PROJECT RELIEF

tie acknowledges that in relation to any Dispute under the Infraco Contract where the Client's sole involvement in any Client Claim is in performing administrative functions in relation to the Client Claim, and not as an interested or affected party, then Infraco shall be entitled to recover its costs incurred in relation to such dispute pursuant to Clause 7A (*Tramco Equivalent Project Relief*) of the Tram Supply Agreement from **tie**. **tie** agrees to pay to the Infraco such reasonable costs unless the dispute proceeds to adjudication where such costs shall be paid as allocated between **tie** and the Tram Supplier by the adjudicator following the Dispute Resolution Procedure.

The Infraco agrees that it shall minimise as far as reasonably practicable its administrative costs in relation to Equivalent Project Relief.

The Tram Supplier agrees not to vexatiously claim under the Tram Supply Agreement or vexatiously use the Disputes Resolution Procedure.

12. RIGHTS OF THIRD PARTIES

A person who is not party to this Agreement shall have no right to enforce any term of this Agreement. This clause does not affect any right or remedy of any person which exists or is otherwise available.

13. LAW AND JURISDICTION

This Agreement shall be governed by and construed in accordance with Scots law and the Scottish Courts shall have jurisdiction with regard to all matters arising under it.

TIE00899939_0184

IN WITNESS WHEREOF these presents on this and the preceding [ ] pages together with Appendix 1 which is annexed and subscribed as relative hereto and the copy of the Tram Supply Agreement which is attached and subscribed as relative hereto are executed as follows:

EXECUTED for and on behalf of **TIE LIMITED**
at

on 2008 by:

Authorised Signatory _____

Full Name _____

Witness Signature _____

Full Name _____

Address _____

_____

EXECUTED for and on behalf of **BILFINGER BERGER UK LIMITED**

at

on 2008 by:

Director _____

Full Name _____

Director _____

Full Name _____

EXECUTED for and on behalf of **SIEMENS PLC**
at

on 2008 by:

Authorised Signatory _____

Full Name _____

Authorised Signatory _____

Full Name _____

EXECUTED for and on behalf of
CONSTRUCCIONES Y AUXILIAR DE FERROCARRILES S.A. (CAF)

at

on 2008 by:

Authorised Signatory _____

Full Name _____

Witness Signature _____

Full Name _____

Address _____

_____

TIE00899939_0186

APPENDIX 1 TO THE TRAM SUPPLY NOVATION AGREEMENT

SCHEDULE OF AMENDMENTS TO THE TRAM SUPPLY AGREEMENT

Clause 7.15

Insert at end of Clause 7.15 the following:

The Tram Supplier acknowledges that it has a copy of the Infraco Contract and is deemed to be aware of the obligations, risks and liabilities assumed by the Infraco thereunder. Without prejudice to the foregoing, the Tram Supplier shall be deemed to be fully aware of the adverse financial and other consequences for the Client which could arise under the Infraco Contract in consequence, in whole or in part, of a breach on the part of the Tram Supplier of its obligations under this Agreement.

Clause 38.11.2

Delete Clause 38.11.2 and replace with:

38.11.2 all payments under this Agreement to the Client shall be made in pounds sterling by electronic transfer of funds to:

Name and Address of Bank:

Sort Code:

Account Number:

Account Name:

Clause 58.2 - No Fault Termination

Insert the following new Clause 58.2:

58.2 In the event that the Infraco Contract is terminated, this Agreement shall terminate unless the Tram Supplier is notified that **tie** (or another nominated party) requires to step into this Agreement.

Clause 60 - Termination for Corrupt Gifts and Fraud

Delete Clause 60 (Termination for Corrupt Gifts and Fraud), in its entirety substitute therefore:

60.1 The Tram Supplier or anyone employed by it or acting on its behalf (including any Tram Supplier Party) shall not commit any Prohibited Act.

TIE00899939_0187

60.2 If the Tram Supplier or anyone employed by it or acting on its behalf (including any Tram Supplier Party) commits any Prohibited Act, then the Client may terminate this Agreement with immediate effect by giving notice to the Tram Supplier.

Clause 68.1.2.1.1

Delete Clause 68.1.2.1.1 and replace with:

68.1.2.1.1 in the case of notices given to the Client: Bilfinger Berger-Siemens Consortium, Lochside House, Lochside Way, Edinburgh Park EH12 9DT, fax number 0131 452 2518, attention: Project Director, or such other address or fax number in the United Kingdom as the Client may notify the Tram Supplier from time to time for that purpose; or

.....
Director/Authorised Signatory
tie LIMITED

.....
Director/Authorised Signatory
BILFINGER BERGER UK LIMITED

.....
Director/Authorised Signatory
SIEMENS PLC

.....
Director/Authorised Signatory
CONSTRUCCIONES Y AUXILIAR DE FERROCARRILES S.A. (CAF)

TIE00899939_0188

(1) TIE LIMITED

- and -

(2) BILFINGER BERGER (UK) LIMITED

- and -

(3) SIEMENS plc

-and-

(4) CONSTRUCCIONES Y AUXILIAR DE FERROCARRILES S.A. (CAF)

COLLATERAL WARRANTY IN RESPECT OF A TRAM SUPPLY AGREEMENT IN FAVOUR OF tie FROM TRAMCO

relating to

THE EDINBURGH TRAM NETWORK

TIE00899939_0189

AGREEMENT

BETWEEN

(1) **tie LIMITED** (company number SC230949) whose registered office is at City Chambers, High Street, Edinburgh, Midlothian, EH1 1YJ ("**tie**");

(2) **BILFINGER BERGER UK LIMITED**, a company incorporated in England and Wales under number 02418086 and having its registered office at 150 Aldersgate Street, London EC1A 4EJ which expression shall include its successors, permitted assignees and transferees; and

(3) **SIEMENS PLC**, a company incorporated in England and Wales under number 00727817 and having its registered office at Faraday House, Sir William Siemens Square, Frimley, Camberley, Surrey GU16 8QD which expression shall include its successors, permitted assignees and transferees,

(Bilfinger Berger UK Limited and Siemens plc together referred to as the "**Infraco**", which term shall include its successors and permitted assignees); and

(4) **CONSTRUCCIONES Y AUXILIAR DE FERROCARRILES S.A. (CAF),** a company registered in Spain in the Corporate Register of Guipuzcoa: volume 983, sheet 144, page number SS-329, entry 239 and having its registered office at J.M. Iturrioz 26, 20200 Beasain (Guipuzcoa), Spain ("**Tramco**");

BACKGROUND

A By an agreement in writing dated ◆ 2008 (the "**Tram Supply Agreement**"), **tie** appointed Tramco to design, manufacture and supply Trams and supply documentation and associated equipment in connection with the Edinburgh Tram Network.

B **tie** and Infraco have entered into a contract under which Infraco has been appointed to carry out and/or manage the design, construction, installation, commissioning tram procurement, system integration, infrastructure maintenance, tram maintenance and supply of related equipment and materials, trams and related infrastructure in respect of the Edinburgh Tram Network.

C **tie** and Infraco have agreed, with the consent of Tramco, that Infraco shall take over the rights and liabilities of the "**Client**" (as defined in the Tram Supply Agreement) under the Tram

TIE00899939_0190

Supply Agreement by novating the Tram Supply Agreement from **tie** to Infraco upon and subject to the terms of the Novation Agreement (as hereinafter defined).

D It is a term of the Tram Supply Agreement that Tramco shall enter into this Agreement with **tie** following the execution of the Novation Agreement.

IT IS AGREED as follows:

1. DEFINITIONS AND INTERPRETATION

1.1 In this Agreement the following words and expressions shall have the following meanings, unless the context requires otherwise:

"**Agreement**" means this document (as amended from time to time pursuant to Clause 13);

"**Deliverables**" means all written or documentary outputs to be prepared and delivered by Tramco in the performance of the Tram Works and Tramco's other obligations under the Tram Supply Agreement;

"**Infraco Contract**" means the contract to be entered into or entered into by **tie** with Infraco as described in Recital B above;

"**Novation Agreement**" means the novation agreement entered into among **tie**, Tramco and Infraco relating to the novation of the Tram Supply Agreement;

"**Party**" means each and any of the parties to this Agreement and **Parties** shall be construed accordingly; and

"**Tram Supply Agreement**" means the agreement dated [◆] and originally entered into by **tie** and Tramco, which has been novated to Infraco and Tramco pursuant to the Novation Agreement.

1.2 Unless the context requires otherwise:

1.2.1 words importing:

1.2.1.1 the singular include the plural and vice versa; and

1.2.1.2 one gender includes all other genders.

1.2.2 a reference to:

TIE00899939_0191

1.2.2.1 persons includes firms, companies, corporations, partnerships, trusts, authorities and other incorporated and/or unincorporated bodies; and

1.2.2.2 a recital, clause or schedule is a reference to a recital, clause or schedule of or to this Agreement.

1.3 The list of contents and clause headings in this Agreement are included for convenience only and do not affect its interpretation.

1.4 Where a party comprises two or more persons:

1.4.1 any obligations on the part of that party contained or implied in this agreement are deemed to be joint and several obligations on the part of those persons; and

1.4.2 references to that party shall include references to each and any of those persons.

1.5 Unless otherwise defined hereunder, where the Tram Supply Agreement defines a meaning to any capitalised word or expression used in this Agreement, the same meaning shall be given to it in this Agreement.

1.6 In the case of any unintended conflict between the definition or interpretation of words or expressions in this Agreement and in the Tram Supply Agreement, the Tram Supply Agreement shall prevail save where by express words or where it is apparent from the context that the contrary is intended in this Agreement.

2. STANDARD OF CARE

Tramco warrants and undertakes to **tie** that:

2.1 it has carried out and shall carry out and discharge the Tram Works and all its other duties and obligation under the Tram Supply Agreement subject to and in accordance with the terms thereof; and

2.2 in addition to and without derogation from clause 2.1;

2.2.1 Tramco warrants to **tie** that, in the performance of the Tram Works and all its other duties and obligations under the Tram Supply Agreement it shall exercise a reasonable level of professional skill, care and diligence to be expected of a properly qualified and competent Tram designer and manufacturer experienced in carrying out works similar to the Tram Works to be carried out under the Tram Supply Agreement;

TIE00899939_0192

2.2.2 it owes a duty of care to **tie** in carrying out its duties and obligations under the Tram Supply Agreement;

2.2.3 all obligations and duties on the part of Tramco set out in the Tram Supply Agreement which are expressed to be made in favour of or given to **tie** shall be directly enforceable by **tie** pursuant to this Agreement following the novation of the Tram Supply Agreement pursuant to the Novation Agreement.

3. COPYRIGHT LICENCE

3.1 Tramco hereby grants to **tie** a royalty-free and exclusive licence to use such Project IPR and Tram Supplier IPR as may be necessary, for operation and maintenance of the trams but, not in any case, for manufacturing purposes, for **tie** to use in relation to any projects associated with the Tram Works and or the operation and/or maintenance of the Edinburgh Tram Network, including the Trams. This licence shall carry the right to grant sub-licences, and be transferable to third parties, prior written approval of the Tram Supplier. Tramco shall be liable for the Project IPR and the Tram Supplier IPR only to the extent that it is used for the purposes for which it was intended.

3.2 In so far as ownership of the copyright and any other Intellectual Property Rights in any Deliverable prepared or provided by Tramco in connection with the provision of the Tram Works under the Tram Supply Agreement is vested in any person other than Tramco including, without limitation, any Tram Supplier Party, Tramco shall procure for **tie** the benefit of such a licence as is referred to in clause 3.1 for the purposes referred to therein.

3.3 Tramco shall, if so requested at any time, execute such documents and perform such acts (including the grant to **tie** of a licence to use any Software related with operation and maintenance) as may be required fully and effectively to assure to **tie** or any third party the rights referred to in this clause 3.

3.4 Tramco shall provide to **tie** a copy of any of the Deliverables which are to be provided to Infraco under the Tram Supply Agreement as soon as reasonably practicable after receipt by Tramco of a written request from **tie** to do so, unless already delivered to **tie**.

3.5 Tramco undertakes to **tie** that the use by **tie** of any of the Deliverables for any purpose provided for in this clause 3 shall not infringe the rights of any third party in relation to the Deliverables.

TIE00899939_0193

4. REQUIRED INSURANCES AND OCIP INSURANCES

4.1 Tramco undertakes to **tie** that:

4.1.1 it has maintained and shall maintain during the performance of its obligations under the Tram Supply Agreement each of the Required Insurances in accordance with the requirements of Clause 40 (*Required Insurances*) and Schedule 11 (*Required Insurances*) of the Tram Supply Agreement;

4.1.2 cover under the professional indemnity insurance is extended to include Tramco's liabilities under this Agreement;

4.1.3 this Agreement has been disclosed to Tramco's current professional indemnity insurers or brokers (as the case may be) and shall be disclosed to any future professional indemnity insurers or brokers providing the insurance required by this Agreement;

4.1.4 Tramco shall abide by the terms and conditions of insurance and not do or omit to do anything that might prejudice the cover or its rights to make a claim; and

4.1.5 it has been disclosed to it details of the OCIP Insurances and that it shall abide by the terms and conditions of the insurances contained therein and shall not do or omit to do anything that might prejudice the cover of **tie**'s right to make a claim under the OCIP Insurances.

4.2 As and when required by **tie**, Tramco shall produce for inspection documentary evidence that the Required Insurances are being properly maintained.

4.3 Tramco shall not make any material alteration to the terms of the Required Insurances without **tie**'s prior approval which approval shall not be unreasonably withheld. If the insurer makes or attempts to make any material alteration or purports to withdraw cover, or if Tramco is unable to obtain professional indemnity insurance, Tramco shall promptly give written notice of this to **tie**.

5. tie STEP-IN

5.1 Tramco shall not exercise nor seek to exercise any right of determination of the Tram Supply Agreement or to rescind the Tram Supply Agreement by reason of a Client Default or to otherwise discontinue the performance of any of Tramco's obligations in relation to the Tram Supply Agreement by reason of breach on the part of Infraco (or otherwise) without giving **tie** not less than 21 days' written notice of its intention to do so and specifying in such notice the

TIE00899939_0194

grounds for the proposed determination. Tramco for the period of any such notice diligently and properly continue to perform Tramco's obligations under the Tram Supply Agreement.

5.2 Any period stipulated in the Tram Supply Agreement for the exercise by Tramco of a right of determination shall nevertheless be extended as may be necessary to take account of the period of notice required under clause 5.1.

5.3 Compliance by Tramco with the provisions of clause 5.1 shall not be treated as a waiver of any breach on the part of Infraco giving rise to the right of determination nor otherwise prevent Tramco from exercising its rights after the expiration of the notice unless the right of determination shall have ceased under the provisions of clause 5.4

5.4 The right of Tramco to determine the Tram Supply Agreement or to rescind the Tram Supply Agreement or to discontinue the performance of any of its obligations in relation to the Tram Supply Agreement shall cease if within the period of 21 days referred to in clause 5.1, **tie** gives written notice to Tramco:

5.4.1 requiring Tramco to continue with the performance of all its obligations under the Tram Supply Agreement;

5.4.2 acknowledging that **tie** is assuming all the obligations of Infraco (as "Client") under the Tram Supply Agreement; and

5.4.3 undertaking to Tramco to discharge all amounts payable to Tramco under the terms of the Tram Supply Agreement from the date on which such notice under this clause 5.4 is given to Tramco.

5.5 Upon compliance by **tie** with the requirements of clause 5.4, the Tram Supply Agreement shall continue in full force and effect as if the right of determination on the part of Tramco had not arisen and in all respects as if the Tram Supply Agreement had been made between **tie** and Tramco to the exclusion of Infraco.

5.6 Notwithstanding that as between Infraco and Tramco, Tramco's right of determination of its engagement under the Tram Supply Agreement may not have arisen, the provisions of clause 5.5 shall nevertheless apply if **tie** gives written notice to Tramco and Infraco to that effect and **tie** complies with the requirements on its part under clause 5.4.

5.7 Tramco does not need to be concerned or required to enquire whether, and shall be entitled to assume that, as between Infraco and **tie**, the circumstances have occurred permitting **tie** to give notice under clause 5.6.

TIE00899939_0195

5.8 Tramco acting in accordance with the provisions of this clause 5 shall not incur any liability to Infraco arising out of the exercise by **tie** of its rights under this clause 5.

5.9 Save as otherwise set out in this Agreement, unless and until **tie** has given notice under this clause 5:

5.9.1 **tie** has no liability whatsoever to Tramco in respect of amounts payable to Tramco under the Tram Supply Agreement; and

5.9.2 **tie** has no authority to issue any direction or instruction to Tramco in relation to the performance of Tramco's obligations under the Tram Supply Agreement.

5.10 Without prejudice to the provisions of clauses 5.1 to 5.9 inclusive, if prior to the service of any notice under clause 5.4 Tramco is determined under the Tram Supply Agreement for any reason whatsoever, Tramco shall, if required in writing so to do by **tie**, no later than 12 weeks after the date of such determination forthwith enter into a new agreement with **tie** on the same terms as the Tram Supply Agreement, but with such revisions as **tie** and Tramco may reasonable require to reflect altered circumstances and the fact that it is **tie** and not Infraco employing Tramco.

6. ASSIGNATION

6.1 Tramco shall not assign, novate or otherwise transfer the whole or any part of this Agreement without the prior written agreement of **tie**.

6.2 **tie** shall be entitled to assign, novate or otherwise transfer the whole or any part of this Agreement:

6.2.1 to the Scottish Ministers or any local authority or other body with no worse financial standing than that of **tie**; or

6.2.2 to any other person whose obligations under this Agreement are unconditionally and irrevocably guaranteed (in a form reasonably acceptable to Tramco) by **tie** or a person falling within clause 6.2.1; or

6.2.3 to City of Edinburgh Council or Transport Edinburgh Limited; or

6.2.4 to any other person with the prior written consent of Tramco (such consent not to be unreasonably withheld or delayed).

TIE00899939_0196

6.3 Tramco undertakes to **tie** not to contend in any court proceedings under this Agreement that any person to whom **tie** assigns or has assigned its rights under this Agreement or any of them in accordance with the foregoing provisions of this clause is to be precluded from recovering any loss resulting from any breach of this Agreement (whenever happening) by reason that such person is an assignee and not the original contracting party under this Agreement or by reason that **tie** is named under this Agreement or any intermediate assignee of **tie** escaped loss resulting from such breach by reason of the disposal of its interest in the same.

7. LIABILITY OF TRAMCO

7.1 No provision of this Agreement is intended to exclude any obligation or liability which would otherwise be implied whether by law of contract, delict or otherwise.

7.2 The responsibility of Tramco under this Agreement is not to be reduced or in any way reduced or limited by any enquiry or inspection by or on behalf of any person notwithstanding that such enquiry or inspection may give rise to a claim by **tie** against a third party.

7.3 The rights and remedies conferred upon **tie** by this Agreement are in addition to any other rights and remedies that **tie** may have against Tramco including (without prejudice to the generality of the foregoing) any remedies in delict.

7.4 Subject to the other provisions of this Agreement, the liability of Tramco to **tie** is to be determined in all respects in accordance with the terms of the Tram Supply Agreement and this Agreement and, in the event of any claim by **tie** under or through this Agreement, Tramco shall be entitled to rely upon any defence, right, limitation or exclusion under the Tram Supply Agreement as though **tie** were named as Client under it, except that:

7.4.1 **tie** shall not be affected by any subsequent variation of the Tram Supply Agreement which would adversely affect the obligations owed by Tramco or the waiver, compromise or withdrawal of any claim made Infraco; and

7.4.2 Tramco shall not be entitled to exercise any right of set-off, retention or withholding against **tie** to which Tramco may be entitled as against Infraco.

7.5 The liability of Tramco under this Agreement shall be no greater in extent than the liability of Tramco under the Tram Supply Agreement.

7.6 In no event shall the Tram Supplier be responsible for indirect or consequential damages.

TIE00899939_0197

8. DELIVERY, TITLE TO PARTS AND OTHER PROPERTY

Notwithstanding any provision of the Tram Supply Agreement to the contrary, in respect of Tramco's performance of its obligations under the Tram Supply Agreement:

8.1 Tramco shall sell to **tie** or such other party as shall be notified by **tie** to Tramco in writing, each Tram free from all claims, charges, rights in security, liens, encumbrances, hypothecs and other third party rights of any nature.

8.2 Tramco shall transfer title:

8.2.1 to each Tram, to **tie** or such other party as shall be notified by **tie** to Tramco in writing, on the date of issue of the Certificate of Tram Delivery being issued in respect of that Tram;

8.2.2 to each item of the Tram Related Equipment to **tie** or such other party as notified by **tie** to Tramco in writing, on the later of delivery of each item of the Tram Related Equipment to Infraco and the Certificate of Tram Commissioning being issued in respect of the first Tram.

8.3 The risk of loss, theft, damage or destruction of:

8.3.1 each Tram shall pass from Tramco to **tie** or such other party as notified by **tie** to Tramco in writing on the date of issue of the Certificate of Tram Delivery being issued in respect of that Tram;

8.3.2 each item of the Tram Related Equipment shall pass from Tramco to **tie** or such other party as notified by **tie** to Tramco in writing, on the later of delivery of each item of the Tram Related Equipment and the Certificate of Tram Commissioning being issued in respect of the first Tram.

8.4 Tramco shall be responsible for each Tram completely manufactured or in the course of manufacture and for all Tram Related Equipment until such time as risk in the Trams and the Tram Related Equipment passes to **tie** (or as **tie** otherwise shall direct) in accordance with this clause 8.

8.5 Tramco undertakes to **tie** that it shall promptly replace any Tram or any part, component or material incorporated in or to be used in connection with such Tram or any Tram Related Equipment, which is lost, damaged or destroyed by whatever cause, prior to such passing of risk.

TIE00899939_0198

9. CONSENT OF INFRACO

Infraco consents to the terms of this Agreement.

10. NOTICES

10.1 Any notice required to be given under this Agreement is to be hand delivered or sent by prepaid registered or recorded delivery post to the party concerned at its address set out in this Agreement or to such other addresses as may be notified by such party for the purposes of this clause.

10.2 Any notice given pursuant to this clause, if sent by registered or recorded delivery post, is deemed to have been received 48 hours after being posted.

11. RIGHTS OF THIRD PARTIES

A person who is not a party to this Agreement shall have no right to enforce any term of this Agreement.

12. INVALID TERMS

12.1 If any term of this Agreement shall be held to any extent to be invalid, unlawful or unenforceable:

12.1.1 that term shall to that extent be deemed not to form part of this Agreement; and

12.1.2 the validity and enforceability of the remainder of this Agreement shall not be affected.

13. VARIATIONS AND WAIVERS TO BE IN WRITING

13.1 No variation, alteration or waiver of any of the provisions of this Agreement shall be effective unless it is in writing and signed by or on behalf of the Party against which the enforcement of such variation, alteration or waiver is sought.

14. WAIVER

14.1 Save where expressly stated, no failure or delay by any Party to exercise any right or remedy in connection with this Agreement shall operate as a waiver of it or of any other right or remedy nor shall any single or partial exercise preclude any further exercise of the same, or of some other right or remedy. A waiver of any breach of this Agreement shall not be deemed to be a waiver of any subsequent breach.

TIE00899939_0199

14.2 The Parties' rights and remedies under this Agreement are, except where provided otherwise in this Agreement, independent, cumulative and do no operate to exclude one another or any rights or remedies provided by law.

15. JURISDICTION AND LAW

15.1 This Agreement is governed by and is to be construed according to Scots law and the Scottish courts shall have jurisdiction in relation to all matters arising under it.

15.2 The Parties agree that any dispute in relation to this Agreement shall be conducted in accordance with Clause 64 (*Dispute Resolution Procedure*) of the Tram Supply Agreement and the provisions of the said Clause 64 and Schedules 13 (*Dispute Resolution Procedure*) and 14 (*Panels to the Dispute Resolution Procedure*) are deemed to be incorporated mutatis mutandis in respect of this Agreement provided that any reference to "Parties" shall be deemed to refer to **tie** and Tramco, any reference to "Client" shall be deemed to refer to **tie**, and notices to be given in connection therewith shall be given in accordance with clause 10 of this Agreement.

IN WITNESS WHEREOF these presents on this and the preceding [◆] pages are executed as follows:

EXECUTED for and on behalf of **TIE LIMITED**
at

on 2008 by:

Authorised Signatory _____

Full Name _____

Witness Signature _____

Full Name _____

Address _____

_____

TIE00899939_0200

EXECUTED for and on behalf of **BILFINGER BERGER UK LIMITED**

at

on 2008 by:

Authorised Signatory _____

Full Name _____

Witness Signature _____

Full Name _____

Address _____

_____

EXECUTED for and on behalf of **SIEMENS PLC**
at

on 2008 by:

Authorised Signatory _____

Full Name _____

Witness Signature _____

Full Name _____

Address _____

_____

TIE00899939_0201

EXECUTED for and on behalf of
CONSTRUCCIONES Y AUXILIAR DE FERROCARRILES S.A. (CAF)

at

on 2008 by:

Authorised Signatory _____

Full Name _____

Witness Signature _____

Full Name _____

Address _____

_____

TIE00899939_0202

NOVATION AGREEMENT ESCROW LETTER

DLA Piper Scotland LLP
Collins House
Rutland Square
EDINBURGH
EH1 2AA

[**Date**] 2008

Dear Sirs,

EDINBURGH TRAM NETWORK - TRAM SUPPLY AND TRAM MAINTENANCE AGREEMENTS

We refer to:

1. a Tram Supply Agreement dated ◆ between (1) **tie** Limited and (2) Construcciones Y Auxiliar De Ferrocarriles S.A. (CAF) for the design, manufacture and supply of Trams and the supply of documentation and associated equipment ("**Tram Supply Agreement**"); and

2. a Tram Maintenance Agreement dated ◆ between (1) **tie** Limited and (2) Construcciones Y Auxiliar De Ferrocarriles S.A. (CAF) for the provision of services for the ongoing maintenance of Trams and for the supply of consumables and spares for Trams ("**Tram Maintenance Agreement**").

We also refer to the documents detailed in Schedule 1 to this letter (items numbered 1 and 2 being referred to as the "**Novation Agreements**" and items 3 and 4 being referred to at the "**Collateral Warranties**") which have been signed by **tie** Limited and Construcciones Y Auxiliar De Ferrocarriles S.A. (CAF) (but which are as at today's date unsigned by Infraco) (as referred to below) (which shall be referred to as the "**Agreement Documents**").

Originals of the Agreement Documents are enclosed with this letter, and are to be held by you as escrow agent upon the following terms and conditions:

3. Whilst the Agreement Documents are held by you in escrow, they shall have no effect as between the parties thereto.

4. Upon **tie** Limited confirming to you in writing in the form set out in Schedule 2 that an agreement to be made between (1) **tie** Limited and (2) a contractor to be appointed by **tie** Limited ("**Infraco**") to carry out and/or manage the design, construction, installation, commissioning, tram procurement, system integration, infrastructure maintenance, tram maintenance and supply of related equipment and materials, trams and related infrastructure in respect of the Edinburgh Tram Network ("**Infraco Contract**") has been executed by **tie** and Infraco in accordance with the Requirements of Writing (Scotland) Act 1995 and that the

MUE

TIE00899939_0203

Infraco Contract has become unconditional in all respects save only for the execution by Infraco of the Agreement Documents ("**Infraco Completion**"), you are thereupon authorised and directed forthwith:

to deliver the Agreement Documents to Infraco for execution by Infraco in accordance with the Requirements of Writing (Scotland) Act 1995. Delivery of documents hereunder is to be by hand, by courier or by recorded first-class post.

If you do not receive notice from **tie** Limited as aforesaid that Infraco Completion has occurred before the first anniversary of the date of this escrow letter, or such later date as may be agreed in writing by the parties to this escrow letter, you shall be under no further obligation to the signatories of this letter and none of the Agreement Documents shall have any legal effect.

All of the parties to this escrow letter agree that you shall be fully entitled to act in accordance with the terms set out in this escrow letter upon receipt by you of the notice from **tie** Limited referred to in paragraph 2 above, and that in so doing you shall have no liability to us (or any of us) in any respect whatsoever connected to the performance of your duties under this escrow letter. Furthermore, upon the performance of such duties in accordance with the terms of this escrow letter, you shall be irrevocably released from the obligations arising under this escrow letter.

Please sign the acknowledgement below confirming your agreement to the above terms.

Yours faithfully

They are subscribed for and on behalf of
CONSTRUCCIONES Y AUXILIAR DE FERROCARRILES S.A. (CAF)

at

on 2008 by:

Authorised Signatory _____

Full Name _____

.....
Accepted and agreed:
DLA Piper Scotland LLP

TIE00899939_0204

SCHEDULE 1 OF THE NOVATION AGREEMENT ESCROW LETTER

AGREEMENT DOCUMENTS

Document No.	Document Description	Parties
	Tram Supply Agreement Novation Agreement	(1) **tie** Limited (2) Construcciones y Auxliliar de Ferrocarriles (CAF) (3) Bilfinger Berger UK Ltd and Siemens plc
	Tram Maintenance Agreement Novation Agreement	(1) **tie** Limited (2) Construcciones y Auxliliar de Ferrocarriles (CAF) (3) Bilfinger Berger UK Ltd and Siemens plc
	Tram Supply Agreement Collateral Warranty	(1) Construcciones y Auxliliar de Ferrocarriles (CAF) (2) **tie** Limited (3) Bilfinger Berger UK Ltd and Siemens plc
	Tram Maintenance Agreement Collateral Warranty	(1) Construcciones y Auxliliar de Ferrocarriles (CAF) (2) **tie** Limited (3) Bilfinger Berger UK Ltd and Siemens plc

They are subscribed for and on behalf of **CONSTRUCCIONES Y AUXILIAR DE FERROCARRILES S.A. (CAF)**

at

on 2008 by:

Authorised Signatory _____

Full Name _____

They are subscribed for and on behalf of **TIE LIMITED** at

on 2008 by:

Authorised Signatory _____

Full Name _____

TIE00899939_0205

SCHEDULE 2 OF THE NOVATION AGREEMENT ESCROW LETTER

RELEASE LETTER

To: DLA Piper Scotland LLP
Collins House
Rutland Square
Edinburgh EH1 2AA

[Date] 200◆

We, **tie** Limited, refer to the escrow letter dated ◆ from us and Construcciones y Auxliliar de Ferrocarriles (CAF) to you and countersigned by you. Words and phrases defined in the escrow letter shall have the same meanings when used herein.

We hereby confirm to you, by reference to paragraph 2 of the escrow letter that Infraco Completion has taken place, and you are therefore hereby authorised and directed forthwith to deliver the Agreement Documents to Infraco for execution in accordance with the Requirements of Writing (Scotland) Act 1995 (by hand or courier or recorded first-class post) in accordance with paragraph 2 (a) of the escrow letter.

Director/Authorised Signatory,

For and on behalf of **tie** Limited

They are subscribed for and on behalf of
CONSTRUCCIONES Y AUXILIAR DE FERROCARRILES S.A. (CAF)

at

on 2008 by:

Authorised Signatory _____

Full Name _____

They are subscribed for and on behalf of **TIE LIMITED** at

on 2008 by:

Authorised Signatory _____

Full Name _____

[redacted]

Director/Authorised Signatory
tie LIMITED

[redacted]

Director/Authorised Signatory
CONSTRUCCIONES Y AUXILIAR DE FERROCARRILES S.A. (CAF)

TIE00899939_0206

This is Schedule 2 referred to in the foregoing Tram Supply Agreement between tie Limited and Construcciones Y Auxiliar de Ferrocarriles S.A. (CAF)

SCHEDULE 2

EMPLOYER'S REQUIREMENTS

SCHEDULE PART 2

EMPLOYER'S REQUIREMENTS

Erratum to Version 4

Erratum	Date	Comments
001	24/04/08	Page 48: Section 2.15: The footnote "Damian has already instructed this change." – is to be ignored.
002	24/04/08	Page 90: Section 7: The footnote "The word maximum would allow no channels to be provided and still be compliant! Two channels ok as a minimum." – is to be ignored.
003	24/04/08	Page 147: Section 10.1.5: The reference in the last sentence to Schedule 32 is incorrect. It should read "The Noise and Vibration Policy is included in Schedule Part 29 (***tie*** *and CEC Policies*)".
004	24/04/08	Page 174: Section 12.9 - The reference to Schedule 45 should refer to Schedule Part 40.
005	24/04/08	Page 209: Section 17.1: Last paragraph The reference to Section 32 should read Schedule Part 29. After Project Safety and Quality Interface Document add (40-91-PLA-002).
006	24/04/08	Page 273: Section 23.16.6 - Schedule 7 - Performance Regime is incorrect. This should now refer to Schedule Part 6.
007	24/04/08	Page 609: Section 40.1.2 – Final paragraph Performance payment regime – The reference to Schedule 7. This should now refer to Schedule Part 6.
008	24/04/08	Page 634: Section 40.2.4 Last line Reference to Clause 52 of Infraco should read as Clause 52.20.1.
009	24/04/08	Page 635: Section 40.2.4 Table 93 Fault Category 3 “Edqual Service elements in Schedule 7” should read “Equal Service elements in Schedule Part 6”.
010	24/04/08	Page 645: Section 40.2.8 Last set of bullet points at bottom of page Reference to Schedule 7 Performance Measurement System should read as Schedule Part 6.
011	05/05/08	Page 40 Section 2.8 Table 2 reformatted to show entire contents (see attached)
012	05/05/08	Page 41 Section 2.8 Table 3 reformatted to show entire contents (see attached)
013	05/05/08	Page 42 Section 2.8 Table 4 reformatted to show entire contents (see attached)
014	05/05/08	Page 431 Section 29.14 Table 83 see updated version (see attached)
015	05/05/08	Page 610 Section 4.2.2 Table 89 see updated version (see attached)
016	05/05/08	Page 50 Section 2.16(b) 4th bullet - delete “Leith” and replace with “Ocean Terminal or Newhaven according to service”
017	05/05/08	Page 147 Section 10.1.7 - delete “Section 68 of the Edinburgh Tram Line Act 2006” and replace with “Section 63C of the Edinburgh Tram Line Act 2006”
018	05/05/08	Page 169 Section 12.8 Update reference to ISO 10005-1995 to ISO 10005-2005
019	05/05/08	Page 260 Section 23.13.3 - delete “Network” from section heading
020	05/05/08	Page 264 Section 23.14.3 - delete “Network” from section heading
021	05/05/08	Page 266 Section 23.15.3 - delete “Network” from section heading
022	05/05/08	Page 318 Section 24.5 Change reference to Schedule 22 of the Tram Supply Agreement to Schedule 23 of the Tram Supply Agreement
023	05/05/08	Page 318 Section 24.6 3rd paragraph should read “The Trams shall have a key suiting system that provides a logical hierarchy of access to cleaners, inspectors, drivers and maintenance staff. It shall not be part of the general suite but tram specific as detailed in Section 22.2.1 of these Employer’s Requirements.”

TIE00899939_0208

Erratum	Date	Comments
024	05/05/08	Page 622 Section 40.2.2 Table 92 Structures SO3 and SO4 - delete "(if CEC own it)" from the comments column
025	05/05/08	Page 625 Section 40.2.2 Table 92 Structures S20 to S31 - insert "the Operator is responsible for cleaning and graffiti removal" to the comments column
026	05/05/08	Page 627 Section 40.2.2 Table 92 Retaining Walls W03 to W19 - insert "the Operator is responsible for cleaning and graffiti removal" to the comments column
027	05/05/08	Page 632 Section 40.2.4 Final paragraph headed "**Further Maintenance Activities" -** delete bullet "removal of graffiti" and bullet "cleaning"
028	05/05/08	Page 644 Section 40.2.8 Under heading "Reporting Period Review", 4th bullet relating to maintenance report, sub-bullets 1 and 2 - delete "including cleaning"
029	05/05/08	Page 646 Section 40.2.10 3rd paragraph - delete "operational phase" and replace with "Term"
030	05/05/08	Page 652 Section 40.2.19 - delete section and insert "Not used"
031	05/05/08	Page 652 Section 40.2.20 - delete bullets 1 to 4, and 6
032	05/05/08	Page 662 Section 40.3.9 1st paragraph - delete "will be established in detail during the tender process" and replace with "in the Tram Maintenance Agreement"
033	05/05/08	Page 665 Section 40.4.1 9th paragraph 3rd sentence - replace with "The Edinburgh Tram Network design shall be selected such that all equipment/systems used in the design shall continue to be available for the design life specified and that the Infraco shall give tie a minimum of 12 months notice where any supplier intends to cease supply of any component. The Infraco shall recommend a strategy for managing such obsolescence and effect replacement of such components where these fail."
034	05/05/08	Page 672 Section 40.5.2 6th bullet - amend to read "evidence of product whole life cycle experience to date in other service use"
035	05/05/08	Appendix 1 – ET Brand Guidelines as referred to in Section 5 (see attached)

TIE00899939_0209

Employer's Requirements

Erratum 011

Table 2 (Page 40 Section 2.8)

TIE00899939_0210

Network / Phasing	Service frequency commencing at:	Monday - Friday (trams per hour)					
		first tram 06:00	06:45	07:00	07:20	23:15	last tram 23:59
1a	Airport to Ocean Terminal	0	6	6	6	6[a]	0
1a	Ocean Terminal to Airport	6	6	6	6	6	0
1a	Haymarket to Newhaven	0	0	6	6	0	0
1a	Newhaven to Haymarket	0	0	0	6	0	0
1b	Airport to Ocean Terminal	0	6			6[a]	0
1b	Ocean Terminal to Airport	6	6			6	0
1b	Granton to Newhaven	0	6			6[b]	0
1b	Newhaven to Granton	6	6			6[c]	0

Network / Phasing	Service frequency commencing at:	Saturday (trams per hour)					
		first tram 06:00	06:45	07:30	07:50	23:15	last tram 23:59
1a	Airport to Ocean Terminal	0	6	6	6	6[a]	0
1a	Ocean Terminal to Airport	6	6	6	6	6	0
1a	Haymarket to Newhaven	0	0	6	6	0	0
1a	Newhaven to Haymarket	0	0	0	6	0	0
1b	Airport to Ocean Terminal	0	6			6[a]	0
1b	Ocean Terminal to Airport	6	6			6	0
1b	Granton to Newhaven	0	6			6[b]	0
1b	Newhaven to Granton	6	6			6[c]	0

Network / Phasing	Service frequency commencing at:	Sunday (trams per hour)					
		first tram 07:00	07:45	08:00	08:20	23:15	last tram 23:59
1a	Airport to Ocean Terminal	0	6	6	6	6[a]	0
1a	Ocean Terminal to Airport	6	6	6	6	6	0
1a	Haymarket to Newhaven	0	0	6	6	0	0
1a	Newhaven to Haymarket	0	0	0	6	0	0
1b	Airport to Ocean Terminal	0	6			6[a]	0
1b	Ocean Terminal to Airport	6	6			6	0
1b	Granton to Newhaven	0	6			6[b]	0
1b	Newhaven to Granton	6	6			6[c]	0

Notes:

[a] from approx 23:15 Trams run from the Airport - City Centre only

[b] from approx 23:15 Trams run from Granton - City Centre only

[c] from approx 23:15 Trams run from Newhaven - Haymarket continuing in service on TL2 to Gyle

Employer's Requirements

Erratum 012

Table 3 (Page 41 Section 2.8)

TIE00899939_0212

8 & 8 Tram per Hour Enhanced AM & PM Peak Scenario

Networking (Phasing) and Service Frequency commencing at:		06:00	06:45	07:00	07:20	07:45	09:45	15:45	19:00	19:45	23:15
1 a	Airport to Ocean Terminal	0	6	8	8	8	6	6	8	6	6a
1 a	Ocean Terminal to Airport	6	6	8	8	8	6	6	8	6	6
1 a	Haymarket to Newhaven	0	[redacted]	6	8	8	6	6	8	6	6
1 a	Newhaven to Haymarket	0	[redacted]	0	6	8	6	6	8d	6	6
1 b	Airport to Ocean Terminal	0	6	8	[redacted]	8	6	6	8	6	6a
1 b	Ocean Terminal to Airport	6	6	8	[redacted]	8	6	6	8	6	6
1 b	Granton to Haymarket	0	6	8	[redacted]	8	6	6	8	6	6 b
1 b	Haymarket to Granton	6	6	8	[redacted]	8	6	6	8	6	6c

Networking (Phasing) andService Frequency commencing at:		Saturday (trams per hour)									
		first tram 06:00	06:45	07:30	07:50	08:15	18:30	18:50	19:15	23:15	last tram 23:59
1 a	Airport to Ocean Terminal	0	6	6	8	[redacted]	8	8	6	6a	0
1 a	Ocean Terminal to Airport	6	6	6	8	[redacted]	8	8	6	6	0
1 a	Haymarket to Newhaven	0	[redacted]	6	8	[redacted]	8	8	6	6	0
1 a	Newhaven to Haymarket	0	[redacted]	0	6	[redacted]	8	8d	6	6	0
1 b	Airport to Ocean Terminal	0	6	6	8	8	8	[redacted]	6	6a	0
1 b	Ocean Terminal to Airport	6	6	6	8	8	8	[redacted]	6	6	0
1 b	Granton to Haymarket	0	6	6	8	8	8	[redacted]	6	6b	0
1 b	Haymarket to Granton	6	6	6	6	8	8	[redacted]	6	6c	0

TIE00899939_0213

		Sunday (trams per hour)									
Networking (Phasing) andService Frequency commencing at:		first tram 07:00	07:45	07:50	08:00	08:45	18:00	18:20	18:45	23:15	last tram 23:59
1a	Airport to Ocean Terminal	0	6	6	6	[redacted]	6	6	[redacted]	6a	0
1a	Ocean Terminal to Airport	6	6	6	6	[redacted]	6	6	[redacted]	6	0
1a	Haymarket to Newhaven	0	[redacted]	6	6	[redacted]	6	6	[redacted]	[redacted]	0
1a	Newhaven to Haymarket	0	[redacted]	0	6	[redacted]	6	6d	[redacted]	[redacted]	0
1b	Airport to Ocean Terminal	0	6	[redacted]	6	6	6	[redacted]	6	6a	0
1b	Ocean Terminal to Airport	6	6	[redacted]	6	6	6	[redacted]	6	6	0
1b	Granton to Haymarket	0	6	[redacted]	6	6	6	[redacted]	6	6b	0
1b	Haymarket to Granton	6	6	[redacted]	6	6	6	[redacted]	6	6c	0

Notes:
a) from approx 23:15 trams run from Airport - St Andrew Sq only
b) from approx 23:15 trams run from Granton - St Andrew Sq only
c) from approx 23:15 Granton trams run from Newhaven - Haymarket continuing in service on to Gyle
d) from approx 19:20 (18:50 Saturdays and 18:20 Sundays) Haymarket trams running from Newhaven - Haymarket continue in service to Gyle

Note: The numbers in individual cells give the service frequency starting from the time at the top of the relevant column.

TIE00899939_0214

Employer's Requirements

Erratum 013

Table 4 (Page 42 Section 2.8)

TIE00899939_0215

Phase	Service Frequency commencing at:	Saturday (trams per hour)					
		First tram 06:00	06:45	07:30	07:50	23:15	Last tram 23:59
1a	Airport to Ocean Terminal	0	6	6	6	6a	0
1a	Ocean Terminal to Airport	6	6	6	6	6	0
1a	Haymarket to Newhaven	0	0	6	6	0	0
1a	Newhaven to Haymarket	0	0	0	6	0	0
1b	Airport to Ocean Terminal	0	6	6	6	6a	0
1b	Ocean Terminal to Airport	6	6	6	6	6	0
1b	Granton to Newhaven	0	6	6	6	6b	0
1b	Newhaven to Granton	6	6	6	6	6c	0

TIE00899939_0216

Employer's Requirements

Erratum 014

Table 83 (Page 431 Section 29.14)

TIE00899939_0217

Table 83 - Depot Plant and Equipment to be Provided (updated 020508)

	No	Description	Function	Features	Fixed/Mobile/ Portable	Location used	Supplier	User	Maintainer	Access Control	Cleaned	Quantity
1		Cleaning Equipment										
	1.1	Tram Cleaning Equipment	Equipment for cleaning of tram interiors	110V Industrial vacuum cleaning equipment, ≥ 2kW power Equipment to allow removal Floor polishing equipment	P	Generally used in stabling areas However can be used throughout the Depot	T	O	O	O	O	6
	1.2	Tram pressure washer	Industrial washer for general tram cleaning within the Depot including bogie washing	Self powered Hot water/steam - self heating Pressure variable up to ≥200 bar Flow rate ≥12 l/min Lance and hose ≥10m Detergents compatible with Tram external finishes	M	Throughout Depot	T	T	T	T	T	1

	No	Description	Function	Features	Fixed/Mobile/ Portable	Location used	Supplier	User	Maintainer	Access Control	Cleaned	Quantity
	1.3	Infraco pressure washer	Removal Removal of fly posters General cleaning	Features as per Tram pressure washer Mobile towable bowser with capacity for up to one shift of cleaning Infraco to ensure interchangability with tram pressure washer Readily transportable on back of road-rail and other road vehicles	M	Across the ETN	I	I	I	I	I	1

	No	Description	Function	Features	Fixed/Mobile/ Portable	Location used	Supplier	User	Maintainer	Access Control	Cleaned	Quantity
	1.4	Tram Washing Plant	Fixed plant for cleaning of Tram exterior	Unidirectional >15 tph continuously Minimised water consumption, maximised water recirculation controllable and monitored from Control Centre via SCADA system Self contained Pre-wet One pair application brushes Automatic end wash Two pair water wash brushes Dryer Operates from -5°C ambient external temperature within shelter Final details TBD with tram supplier ≥70% water recycling	F	Alongside main workshop	I	O	O	O	O	1

	No	Description	Function	Features	Fixed/Mobile/ Portable	Location used	Supplier	User	Maintainer	Access Control	Cleaned	Quantity
				Backflow prevention devices shall be installed. Treatment of wastewater to meet appropriate standards prior to connecting to site drainage system shall be provided.								
	1.5	Rail Groove Cleaning Equipment	P-way cleaning	Vacuum equipment to remove detritus/debris from grooved track including drain boxes and points Able to clean drains and gullies employing water jets Transportable on road/rail vehicle, lifted with crane or fork lift truck	M	Across the ETN	I	I	I	I	I	1

	No	Description	Function	Features	Fixed/Mobile/ Portable	Location used	Supplier	User	Maintainer	Access Control	Cleaned	Quantity
				Self powered for full shift Easy collection/disposal of detritus/debris								
	1.6	Parts washer	Infrastructure/Tram component cleaning & degreasing in dirty workshop	Able to wash components ≤100kg, ≤750mm diameter	F	Within dirty workshop	I	I/T	I	I	User	1
	1.7	Floor scrubber	Depot floor cleaning	Industrial vacuum/brush scrubber equipment Compatible with floor finishes	M	Within Depot building	T	T	T	T	T	1
2		Mechanical Handling										
	2.1	Shunter	Manouveuring Trams within workshop	Battery powered Road/rail capability Capable of towing/propelling single Trams Speed up to 3 km/h Local and remote control	M	Throughout Depot tracks Road capability to move between tracks on	T	O/T	~~I/~~T	O	User	1

	No	Description	Function	Features	Fixed/Mobile/ Portable	Location used	Supplier	User	Maintainer	Access Control	Cleaned	Quantity
				Charging facilities Coupler at each end		hardstanding						
	2.2	Tram lifting system and stands	Lifting Trams to allow routine maintenance and removal of bogie(s)	Fixed underfloor system providing flush floor when not in use. Ability to lift fully functional, unladen tram. Synchronised lift from single control panel. Ability to stop and lock lift at any vertical positionInterlocking to protect Tram in event of system/component failure. Manually positioned stands to be provided Interlocking with OLE if required.	F	Main workshop	I	T	T	T	T	1 set

	No	Description	Function	Features	Fixed/Mobile/ Portable	Location used	Supplier	User	Maintainer	Access Control	Cleaned	Quantity
	2.3	Fixed high level access platforms	To allow access to all equipment mounted on Tram roof	Capable of providing access to all roof mounted equipment on tram Decking to prevent tools or small to components falling through Handrails and toeboards to prevent personnel/material falling Access/egress gates interlocked with OLE End protection	F	Main workshop	I	T	I	T	T	2 sets
	2.4	Overhead crane	Bridge type crane spanning 2 roads within the workshop to allow all material within main workshop to be transported up to and including size/weight of motor bogie	≥6.3 tonne capacity Vertical clearance <960 mm from hook (fully raised) to top of crane Traverses below OLE Interlocked with OLE Remote control using hand held device	F	Main workshop	I	T/I	T	T	User	1

	No	Description	Function	Features	Fixed/Mobile/ Portable	Location used	Supplier	User	Maintainer	Access Control	Cleaned	Quantity
				Multi-speed faciltiy - lift, traverse and travel Long and cross travel to cover all areas over the two roads								
	2.5	Mobile crane	Facilitate removal of miscellaneous equipment including bogie components within the dirty workshop	≥2t capacity Powered operation	M	Throughout workshops	T	T/I	T	T	User	1
	2.6	Bogie workstands	To allow dismounted bogies to be maintained	Allows bogie to be manoeuvred along the stub track in the dirty workshop Wheel locks Capable of supporting both trailer and motor bogie	M	Dirty workshop	T	T	T	T	T	1
	2.7	Other tram equipment stands	Various stands to allow items of equipment to be stored and readily maintained when dismounted from the Tram	Infraco to propose depending on tram design Expected to include stands for doors,	M	Throughout Depot	T	T	T	T	T	

	No	Description	Function	Features	Fixed/Mobile/ Portable	Location used	Supplier	User	Maintainer	Access Control	Cleaned	Quantity
				windows, body panels etc…								
	2.8	Accommodation bogies	To allow Trams to be moved within workshop once bogies have been removed or the Tram has been split at any articulation	Allows Tram to be manoeuvred throughout the depot once any combination of bogies has been replaced Allows entire tram to be manoeuvred throughout the depot once any articulation has been split	M	Throughout Depot	T	T	T	T	T	
	2.9	Fork lift truck	Lifting and transporting miscellaneous equipment	Battery powered Charging facilities Road wheels >3 t lifting capacity Drum handling equipment Crane arm Capable of accessing	M	Throughout the Depot but limited to hard standing areas when outside	T & I	T/I	T & ~~/~~I	T & I	User	1 plus 1

	No	Description	Function	Features	Fixed/Mobile/ Portable	Location used	Supplier	User	Maintainer	Access Control	Cleaned	Quantity
				all shelving and racking in stores- Infraco to demonstrate								
	2.10	Pallet truck	Lifting & Transporting equipment particularly in stores	Manually manoeuvred, hydraulic lifting the Infraco to propose requirements. Infraco to provide integrated solution	M	Throughout the Depot but limited to hard standing areas when outside	I	T/I	T/I	T	Us er	The Infraco to propose
	2.11	Hand trolleys	Transporting tools and spares	Unpowered the Infraco to propose requirements. Infraco to provide integrated solution	M	Throughout the Depot but limited to hard standing areas when outside	I	T/I	T/I	T	Us er	The Infraco to propose

	No	Description	Function	Features	Fixed/Mobile/ Portable	Location used	Supplier	User	Maintainer	Access Control	Cleaned	Quantity
	2.12	Infraco lifting slings	General slings for lifting infrastructure heavy components on system and in Depot building	Infraco to propose. Stand for storage	P	Use on system infrastructure	I	I	I	I	I	The Infraco to propose
	2.13	Tram lifting slings	Specific lifting gear to allow all equipment to be removed and replaced.	Raised hook on overhead crane can be no more than 5390 mm ARL the Infraco to propose Stand for storage	M	Use in Depot building only	T	T	T	T	T	Tramco to propose
	2.14	Windscreen/window removal equipment	For use in replacing tram windscreens and side windows	Mobile stand capable to being used to access both windscreen and side windows Electrically powered vacuum beam with suckers adapted to windscreen design Audio/visual alarm in the event of suction loss	M	Use in Depot building only	T	T	T	T	T	1

	No	Description	Function	Features	Fixed/Mobile/ Portable	Location used	Supplier	User	Maintainer	Access Control	Cleaned	Quantity
	2.15	Re-railing equipment	For use in re-railing trams out on the System	Variety of jacks/beams/slides to be proposed by the Infraco Airbags Slew locking devices Capable of being readily transported on the road/rail vehicle	M	Used any where on system including Tramstops	T	T	T	T	T	1 set
	2.15	Stop boards	To indicate the presence of equipment/personnel/trams on the tracks	The Infraco to propose requirements. Infraco to develop integrated solution	P	Throughout System	I	T/I	I	T/I	User	≥20
3		Workshop & Stores Furniture										
	3.1	Shelving and racking	Storage of spares and other material	Heavy duty The Infraco to propose requirements. The Infraco to develop integrated solution	F	Stores	I	T/I	I	T/I	User	The Infraco to propose
	3.2	Tram staging	for Tram inspections/repairs	The Infraco to propose any	M	Used within Depot	T	T	T	T	T	The Infraco to propose

	No	Description	Function	Features	Fixed/Mobile/ Portable	Location used	Supplier	User	Maintainer	Access Control	Cleaned	Quantity
				additional staging required		building						
	3.3	General staging	For infrastructure inspections/repairs	The Infraco to propose any additional staging required	M	Across Edinburgh Tram Network	I	I	I	I	I	The Infraco to propose
	3.4	Shelving	Storage of minor items/documents	The Infraco to propose requirements. The Infraco to develop integrated solution	F	Throughout workshops	I	T/I	I	T/I	Us er	The Infraco to propose
	3.5	Workbenches	Equipment maintenance	The Infraco to propose requirements. The Infraco to develop integrated solution	F	Throughout workshops	I	T/I	I	T/I	Us er	The Infraco to propose
	3.6	Cupboards	Storage of minor items/documents	The Infraco to propose requirements. The Infraco to develop integrated solution	F	Throughout workshops	I	T/I	I	T/I	Us er	The Infraco to propose
	3.7	COSHH cupboard	Storage of COSHH items	The Infraco to propose requirements. The	F	Dirty workshop	I	T/I	I	T/I	use r	The Infraco to propose

	No	Description	Function	Features	Fixed/Mobile/ Portable	Location used	Supplier	User	Maintainer	Access Control	Cleaned	Quantity
				Infraco to develop integrated solution								
	3.8	Workshop stools	Personnel comfort when working	The Infraco to propose requirements. The Infraco to develop integrated solution	F	Throughout workshops	I	T/I	T/I	T/I	Us er	The Infraco to propose
4		Fixed Plant										
	4.1	Air conditioning maintenance equipment	Specialist tools for filling/emptying refrigerant	The Infraco to propose	F	Anywhere in Depot building	T/I	T/I	T/I	T/I	T/I	The Infraco to propose
	4.2	Tyre replacement equipment	Specialist tools for tyre splitting/removal/balancing /bearing replacement	The Infraco to propose	F	Dirty workshop	T	T	T	T	T	1
	4.3	Underfloor wheel lathe	In-situ reprofiling of Tram tyres	Capable of producing a range of wheel profiles. Tolerances to be agreed between the Infraco Swarf conveyed to skip for removal by means of forklift truck capable of turning all wheels on one Tram within	F	Within Depot building.	I	T	T	T	T	1

	No	Description	Function	Features	Fixed/Mobile/ Portable	Location used	Supplier	User	Maintainer	Access Control	Cleaned	Quantity
				eight hour shift								
	4.4	Sand Plant	Refilling of Tram sanding equipment	Minimum silo capacity 30 tonnes Capable of receiving sand delivery directly from road vehicle Allows Tram driver to fill an empty tram within 5 minutes Rate of fill to be sustainable for 30 minutes. In no circumstances shall the interval between the filling of two Trams exceed 10 minutes The physical condition of the sand shall not deteriorate when stored Sand deliveries to a	F	Dedicated facility	T	O	O	O	~~I~~T	1

	No	Description	Function	Features	Fixed/Mobile/ Portable	Location used	Supplier	User	Maintainer	Access Control	Cleaned	Quantity
				Tram shall stop automatically when the tram sand box is full Sand filling nozzles to be compatible with the sand filling inlets on the trams Signal interlocking to inhibit the movement of a tram if the sand filling nozzles are not returned to their correct storage position.								
	4.5	Machine tools	General machine tools required for maintenance	The Infraco to propose requirements. The Infraco to develop integrated solution	F	Dirty workshop	I	T/I	T/I	T/I	User	The Infraco to propose
	4.6	Paint booth	Respraying of removable Tram panels	For use with water based paints integrated compressor	F	Outside workshop	T	T/I	T/I	T	User	1
	4.7	Pantograph	to calibrates and align	The Infraco to	F	Throughout	T	T	T	T	T	1

	No	Description	Function	Features	Fixed/Mobile/ Portable	Location used	Supplier	User	Maintainer	Access Control	Cleaned	Quantity
		maintenance & load test jig	tram pantograph off Tram roof	propose		workshops						
	4.8	Suspension setting equipment	To allow suspension to be set/shimmed without using tram lift	The Infraco to propose	M	Throughout workshops	T	T	T	T	T	1
	4.9	Diesel generator	Back up power source	Capable of connection to the depot LV switchboard and other plant requiring an external energy source. Capable of providing at least three day continuous operation.	M	Across network	*	I, T & O	~~I~~*	I		*To be rented by the Operator if and when required.
5		Hand & Mobile Tools										
	5.1	Infrastructure tools	Hand tools	The Infraco to propose	P	Across ETN	I	I	I	I	I	The Infraco to propose
	5.2	Tram tools	Hand tools	The Infraco to propose	P	Across ETN	T	T	T	T	T	Tramco to propose
6		Welding Shop Equipment										
	6.1	Ferrous welding equipment	General infrastructure repairs	The Infraco to propose requirements. Infraco	F	Dirty workshop	I	T/I	I	T/I	Us er	The Infraco to propose

	No	Description	Function	Features	Fixed/Mobile/ Portable	Location used	Supplier	User	Maintainer	Access Control	Cleaned	Quantity
				to develop integrated solution								
	6.2	Aluminium welding equipment	Specialist Tram and Tram shelter repairs	The Infraco to propose requirements. The Infraco to develop integrated solution	F	Dirty workshop	I	T/I	I	T/I	Us er	The Infraco to propose
7		Battery Shop Equipment										
	7.1	Tram battery charger	To recharge Tram Batteries	The Infraco to propose	P	Battery room	T	T	T	T	T	The Infraco to propose
	7.2	Infrastructure battery chargers	To recharge various batteries used in power supply, control and comms equipment	The Infraco to propose and develop solution compatible with tram battery charger	P	Battery room	I	T	T	T	T	The Infraco to propose
8		Instrumentation and Test Equipment										
	8.1	Tram test equipment	To allow testing of measurement and testing of tram equipment	The Infraco to propose. Note any overlap with "Special Tools" to be highlighted. As a minimum, proposal to	M/P	The Infraco to propose	T	T	T	T	T	The Infraco to propose

	No	Description	Function	Features	Fixed/Mobile/ Portable	Location used	Supplier	User	Maintainer	Access Control	Cleaned	Quantity
				include; headlight tester, tools to allow event recorder to be downloaded and interrogated, tools to allow CCTV systems to be downloaded and interrogated, tools to allow PA and PID announcements to be re-configured.								
	8.2	Infrastructure and Fixed systems test equipment	To allow measurement and testing of infrastructure and fixed systems	The Infraco to propose. Note any overlap with "Special Tools" to be highlighted as a minimum, proposal to include; OLE height and stagger gauge, stray current data loggers, noise measurement equipment, ride measurement equipment, point	M/P	The Infraco to propose	I	I	I	I	I	The Infraco to propose

	No	Description	Function	Features	Fixed/Mobile/ Portable	Location used	Supplier	User	Maintainer	Access Control	Cleaned	Quantity
				setting detection equipment, ≥3 sets of live line testing equipment								
9		Infrastructure Maintenance Equipment										
	9.1	Portable P&C grinders	To dress points and crossings	The Infraco to propose	M	On Site	I	I	I	I	I	1 set
	9.2	Track welding equipment	to build up profiles/replace sections of track	The Infraco to propose	M	On Site	I	I	I	I	I	1 set
	9.3	Portable tamping equipment	To build up track ballast to realign track	The Infraco to propose	M	On Site	I	I	I	I	I	1 set
	9.3	Portable lighting equipment	To illuminate work/collision sites	The Infraco to propose	M	On Site	I	I	I	I	I	1 set
	9.4	Portable generators	To power site tools/lights	The Infraco to propose	P	On Site	I	I	I	I	I	2
	9.5	Track measuring Equipment	To allow track line and levels to be measured	The Infraco to propose	P	On site	I	I	I	I	I	1 set
10		Road Vehicles										

	No	Description	Function	Features	Fixed/Mobile/ Portable	Location used	Supplier	User	Maintainer	Access Control	Cleaned	Quantity
	10.1	Road - rail vehicle	To move about the system carrying mobile equipment and personnel	Able to operate on UK roads Able to operate on all parts of the ETN To be equipped with demountable ≥2 man-basket to enable OLE inspection throughout the ETN Capable of towing a tram including ability to apply tram brakes from cab of road-rail vehicle Capable of having snow plough attached in both road and rail mode Crane with capacity ≥6t and a reach (reduced capacity) of at least 4m. Able to transport other equipment items as set out elsewhere in	M	Mobile throughout ETN and road network	I	I	I	I	I	1

	No	Description	Function	Features	Fixed/Mobile/ Portable	Location used	Supplier	User	Maintainer	Access Control	Cleaned	Quantity
				this list Able to transport ≥3 personnel in cab Payload capability ≥10t This will make it a requirement that the driver has a LGV driving license. Powered winch with ≥8t pulling capacity								
	10.2	Other road vehicles	Miscellaneous vehicles to be proposed by Infraco	The Infraco to propose	M	Throughout road network	I	I	I	I	I	The Infraco to propose
	10.3	Road/rail trailer	Trailer with large man lift for OLE inspection/repairs	Capable of being towed to site by road/rail vehicle or truck	M	Throughout road network	I	I	I	I	I	1

Employer's Requirements

Erratum 015

Table 89 (Page 610 Section 4.2.2)

TIE00899939_0240

Table 89 – Infrastructure and Equipment Responsibilities Allocation Matrix

(updated 020508)

Description	User Competence Assessor	Used by			Cleaned by				Maintained by				Access Controlled by			
		Infraco	Tram Maintainer	Transdev	Infraco	Tram Maintainer	CEC	Transdev	Infraco	Tram Maintainer	CEC	Transdev	Infraco	Tram Maintainer	CEC	Transdev
Tram Stop Structure																
Platform surfaces		N/A	N/A	N/A	✗	✗	✗	✓	✓	✗	✗	✗	✗	✗	✗	✓
Platform Inclined Approach		N/A	N/A	N/A	✗	✗	✗	✓	✓	✗	✗	✗	✗	✗	✗	✓
Canopy		N/A	N/A	N/A	✗	✗	✗	✓	✓	✗	✗	✗	✗	✗	✗	✓
Inside surfaces		N/A	N/A	N/A	✗	✗	✗	✓	✓	✗	✗	✗	✗	✗	✗	✓
External surfaces		N/A	N/A	N/A	✗	✗	✗	✓	✓	✗	✗	✗	✗	✗	✗	✓
Internal Roof surfaces		N/A	N/A	N/A	✗	✗	✗	✓	✓	✗	✗	✗	✗	✗	✗	✓
External Roof surfaces		N/A	N/A	N/A	✗	✗	✗	✓	✓	✗	✗	✗	✗	✗	✗	✓
Integral Lighting		N/A	N/A	N/A	✗	✗	✗	✓	✓	✗	✗	✗	✗	✗	✗	✓
Internal seating		N/A	N/A	N/A	✗	✗	✗	✓	✓	✗	✗	✗	✗	✗	✗	✓
Tram Stop Furnishings																
Stop Name Signage		N/A	N/A	N/A	✗	✗	✗	✓	✓	✗	✗	✗	✗	✗	✗	✓
Static Information Signage		N/A	N/A	N/A	✗	✗	✗	✓	✓	✗	✗	✗	✗	✗	✗	✓
Guard Rails/Barriers (as applicable)		N/A	N/A	N/A	✗	✗	✗	✓	✓	✗	✗	✗	✗	✗	✗	✓
Lighting Columns		N/A	N/A	N/A	✗	✗	✗	✓	✗	✗	✓	✗	✗	✗	✗	✓
Lighting Lanterns		N/A	N/A	N/A	✗	✗	✓	✗	✗	✗	✓	✗	✗	✗	✗	✓
Litter Bins		N/A	N/A	N/A	✗	✗	✗	✓	✓	✗	✗	✗	✗	✗	✗	✓
External seating		N/A	N/A	N/A	✗	✗	✗	✓	✓	✗	✗	✗	✗	✗	✗	✓
Platform Edge White Line		N/A	N/A	N/A	✗	✗	✗	✓	✓	✗	✗	✗	✗	✗	✗	✓
Advertising Signage		N/A	N/A	N/A	✗	✗	✗	✓	✓	✗	✗	✗	✗	✗	✗	✓
Tram Stop Equipment																
CCTV Cameras		N/A	N/A	N/A	✗	✗	✗	✓	✓	✗	✗	✗	✗	✗	✗	✓
Public Address		N/A	N/A	N/A	✗	✗	✗	✓	✓	✗	✗	✗	✗	✗	✗	✓

Loudspeakers																
Hearing Loops		N/A	N/A	N/A	✗	✗	✗	✗	✓	✗	✗	✗	✗	✗	✗	✓
Passenger Information Displays		N/A	N/A	N/A	✗	✗	✗	✓	✓	✗	✗	✗	✗	✗	✗	✓
Passenger Alarm/Help points		N/A	N/A	N/A	✗	✗	✗	✓	✓	✗	✗	✗	✗	✗	✗	✓
Ticket Vending Machines (maintained & serviced by TEL)		N/A	N/A	N/A	✗	✗	✗	✓	✗	✗	✗	✗	✗	✗	✗	✓
Drainage (Interface defined in Table 93)		N/A	N/A	N/A	✓	✗	✓	✗	✓	✗	✓	✗	✗	✗	✗	✓
Trackside Equipments																
Stop Equipment Cabinets		N/A	N/A	N/A	✗	✗	✗	✓	✓	✗	✗	✗	✗	✗	✗	✓
Stop Equipment Cabinet Equipment		N/A	N/A	N/A	✓	✗	✗	✗	✓	✗	✗	✗	✗	✗	✗	✓
Traction Isolator Cabinets		N/A	N/A	N/A	✗	✗	✗	✗	✓	✗	✗	✗	✗	✗	✗	✓
Traction Isolator Cabinet Equipment		N/A	N/A	N/A	✓	✗	✗	✗	✓	✗	✗	✗	✗	✗	✗	✓
Point Control Cabinets		N/A	N/A	N/A	✗	✗	✗	✗	✓	✗	✗	✗	✗	✗	✗	✓
Point Control Cabinet Equipment		N/A	N/A	N/A	✓	✗	✗	✗	✓	✗	✗	✗	✗	✗	✗	✓
Point Heater Cabinets, Point Heaters & Controls		N/A	N/A	N/A	✗	✗	✗	✗	✓	✗	✗	✗	✗	✗	✗	✓
Road Junction Cabinets		N/A	N/A	N/A	✗	✗	✓	✗	✗	✗	✗	✗	✗	✗	✓	✗
Road Junction Cabinet Equipment		N/A	N/A	N/A	✗	✗	✓	✗	✗	✗	✗	✗	✗	✗	✓	✗
Point Machines (including Manual Control)		N/A	N/A	N/A	✓	✗	✗	✗	✓	✗	✗	✗	✗	✗	✗	✓
OLE Contact Wire & Supports		N/A	N/A	N/A	✓	✗	✗	✗	✓	✗	✗	✗	✗	✗	✗	✓
OLE Poles		N/A	N/A	N/A	✓	✗	✗	✗	✓	✗	✗	✗	✗	✗	✗	✓
OLE Pole mounted Equipments		N/A	N/A	N/A	✓	✗	✗	✗	✓	✗	✗	✗	✗	✗	✗	✓
OLE Wall Fixings		N/A	N/A	N/A	✓	✗	✗	✗	✓	✗	✗	✗	✗	✗	✗	✓
OLE Wall fixed Equipment		N/A	N/A	N/A	✓	✗	✗	✗	✓	✗	✗	✗	✗	✗	✗	✓
Tram Signal Heads (Roadside)		N/A	N/A	N/A	✗	✗	✓	✗	✗	✗	✗	✗	✗	✗	✗	✓

Tram Signal Posts (Trackside)		N/A	N/A	N/A	✗	✗	✗	✓	✓	✗	✗	✗	✗	✗	✗	✓
Tram Signals Posts		N/A	N/A	N/A	✗	✗	✗	✓	✓	✗	✗	✗	✗	✗	✗	✓
Tram Detector Loops		N/A	N/A	N/A	✗	✗	✗	✗	✓	✗	✗	✗	✗	✗	✗	✓
Lighting on OLE Masts		N/A	N/A	N/A	✗	✗	✓	✗	✓	✗	✗	✗	✗	✗	✗	✓
Trackside cable ducts		N/A	N/A	N/A	✓	✗	✗	✗	✓	✗	✗	✗	✗	✗	✗	✓
Trackside cables		N/A	N/A	N/A	✓	✗	✗	✗	✓	✗	✗	✗	✗	✗	✗	✓
Cable drawpits		N/A	N/A	N/A	✓	✗	✗	✗	✓	✗	✗	✗	✗	✗	✗	✓
Structures (Bridges, Retaining Walls etc)																
Over Bridges See Table 95 for split		N/A	N/A	N/A	✓	✗	✓	✗	✓	✗	✓	✗	✗	✗	✗	✓
Under bridges See Table 95 for split		N/A	N/A	N/A	✓	✗	✓	✗	✓	✗	✓	✗	✗	✗	✗	✓
Retaining walls		N/A	N/A	N/A	✓	✗	✗	✗	✓	✗	✗	✗	✗	✗	✗	✓
Misc Structures		N/A	N/A	N/A	✓	✗	✗	✗	✓	✗	✗	✗	✗	✗	✗	✓
Swept Path		N/A	N/A	N/A	✗	✗	✓	✗	✗	✗	✓	✗	✗	✗	✗	✓
Swept Path Markings		N/A	N/A	N/A	✗	✗	✓	✗	✗	✗	✓	✗	✗	✗	✗	✓
Track																
Trackwork		N/A	N/A	N/A	✓	✗	✗	✗	✓	✗	✗	✗	✗	✗	✗	✓
Points & Crossings		N/A	N/A	N/A	✓	✗	✗	✗	✓	✗	✗	✗	✗	✗	✗	✓
Track Drainage		N/A	N/A	N/A	✓	✗	✗	✗	✓	✗	✗	✗	✗	✗	✗	✓
Field' Stray Current Equipments		N/A	N/A	N/A	✓	✗	✗	✗	✓	✗	✗	✗	✗	✗	✗	✓
Sub Stations																
Sub Station Buildings		N/A	N/A	N/A	✗	✗	✗	✓	✓	✗	✗	✗	✗	✗	✗	✓
Sub Station Equipments		N/A	N/A	N/A	✓	✗	✗	✗	✓	✗	✗	✗	✗	✗	✗	✓
Sub Station Compounds		N/A	N/A	N/A	✗	✗	✗	✓	✓	✗	✗	✗	✗	✗	✗	✓
Sub Station Parking Facilities		N/A	N/A	N/A	✗	✗	✗	✓	✓	✗	✗	✗	✗	✗	✗	✓
Stray Current Monitoring Points		N/A	N/A	N/A	✓	✗	✗	✗	✓	✗	✗	✗	✗	✗	✗	✓
Stray Current Equipments		N/A	N/A	N/A	✓	✗	✗	✗	✓	✗	✗	✗	✗	✗	✗	✓
Earthing Equipments		N/A	N/A	N/A	✓	✗	✗	✗	✓	✗	✗	✗	✗	✗	✗	✓
Trams																
Free issue' tram mounted equipments		N/A	N/A	N/A	✗	✗	✗	✓	✓	✗	✗	✗	✗	✗	✗	✓
Trams		N/A	N/A	N/A	✗	✗	✗	✓	✗	✓	✗	✗	✗	✗	✗	✓

Tram saloon & Drivers cabs		N/A	N/A	N/A	✗	✗	✗	✓	✗	✓	✗	✗	✗	✗	✗	✓
Radio																
Portable radios		N/A	N/A	N/A	✗	✗	✗	✓	✓	✗	✗	✗	✗	✗	✗	✓
Radio Base stations		N/A	N/A	N/A	✗	✗	✗	✗	✓	✗	✗	✗	✗	✗	✗	✓
Landscaping																
Soft landscaping		N/A	N/A	N/A	✗	✗	✗	✓	✓	✗	✗	✗	✗	✗	✗	✓
Hard Landscaping		N/A	N/A	N/A	✗	✗	✗	✓	✓	✗	✗	✗	✗	✗	✗	✓

Floor	Room No.	Description	User Competence Assessor	Used by			Cleaned by			Maintained by			Access Controlled by		
				Infraco	Tram Maintainer	**Transdev**	Infraco	Tram Maintainer	**Transdev**	Infraco	Tram Maintainer	**Transdev**	Infraco	Tram Maintainer	**Transdev**
Stores, Workshops and Maintenance Area															
Ground Floor Level		Stores Office Centrally located	n.a	✔	✔	✘	✘	✘	✔	✔	✘	✘	✔	✔	✘
		Heavy Store (Infraco)		✔	✘	✘	✔	✘	✘	✔	✘	✘	✔	✘	✘
		Heavy store (Tramco)		✘	✔	✘	✘	✔	✘	✔	✘	✘	✘	✔	✘
		Visitors Entrance Hall	n.a	✔	✔	✔	✘	✘	✔	✔	✘	✘	✘	✘	✔
		Workshop Cleaners Room	n.a	✔	✔	✘	✘	✔	✘	✔	✘	✘	✔	✔	✘
		Light Store (Infraco)		✔	✘	✘	✔	✘	✘	✔	✘	✘	✔	✘	✘
		Light Store (Tramco)		✘	✔	✘	✘	✔	✘	✔	✘	✘	✘	✔	✘
		Infrastructure Workshop		✔	✘	✘	✔	✘	✘	✔	✘	✘	✔	✘	✘
		Dirty Workshop / Machine Shop		✘	✔	✘	✘	✔	✘	✔	✘	✘	✘	✔	✘
		Clean Workshop (Infraco)		✔	✘	✘	✔	✘	✘	✔	✘	✘	✔	✘	✘
		Clean workshop (Tramco)		✘	✔	✘	✘	✔	✘	✔	✘	✘	✘	✔	✘
		Lobby	n.a	✔	✔	✘	✘	✘	✔	✔	✘	✘	✔	✘	✘
		Male Toilets	n.a	✔	✔	✘	✘	✘	✔	✔	✘	✘	✔	✘	✘
		Male Showers	n.a	✔	✔	✘	✘	✘	✔	✔	✘	✘	✔	✘	✘
		Female Toilets	n.a	✔	✔	✘	✘	✘	✔	✔	✘	✘	✔	✘	✘
		Female Showers	n.a	✔	✔	✘	✘	✘	✔	✔	✘	✘	✔	✘	✘
		Staff Corridor	n.a	✔	✔	✔	✘	✘	✔	✔	✘	✘	✘	✘	✘
		Infrastructure Admin	n.a	✔	✘	✘	✘	✘	✔	✔	✘	✘	✔	✘	✘
		Maintenance (Tramco) Admin	n.a	✘	✔	✘	✘	✘	✔	✔	✘	✘	✘	✔	✘
		First Aid	n.a	✔	✔	✔	✘	✘	✔	✔	✘	✘	✘	✘	✔
		Switchroom		✔	✘	✘	✔	✘	✘	✔	✘	✘	✔	✘	✘
		Infrastructure Manager	n.a	✔	✘	✘	✘	✘	✔	✔	✘	✘	✔	✘	✘
		Maintenance (Tramco) Manager	n.a	✘	✔	✘	✘	✘	✔	✔	✘	✘	✘	✔	✘
		Store Room (Cleaners?)	n.a	✔	✔	✘	✘	✘	✔	✔	✘	✘	✘	✘	✘
		Staff Entrance Hall	n.a	✔	✔	✔	✘	✘	✔	✔	✘	✘	✘	✘	✔
		Drying Room	n.a	✔	✔	✘	✘	✘	✔	✔	✘	✘	✔	✔	✘
		Tram Batteries		✘	✔	✘	✘	✔	✘	✔	✘	✘	✘	✔	✘
		Equipment Room		✔	✘	✘	✔	✘	✘	✔	✘	✘	✔	✘	✘
		UPS Room		✔	✘	✘	✔	✘	✘	✔	✘	✘	✔	✘	✘

Floor	Room No.	Description	User Competence Assessor	Used by			Cleaned by			Maintained by			Access Controlled by		
				Infraco	Tram Maintainer	**Transdev**	Infraco	Tram Maintainer	**Transdev**	Infraco	Tram Maintainer	**Transdev**	Infraco	Tram Maintainer	**Transdev**
		Compressor Room - Air tools		✔	✘	✘	✔	✘	✘	✔	✘	✘	✔	✘	✘
		Tram Maintenance Area		✘	✔	✔	✘	✔	✘	✔	✘	✘	✘	✔	✘
		Maintenance Area Transit Zone		✔	✔	✔	✘	✔	✘	✔	✘	✘	✘	✔	✘
		Inspection Pits		✘	✔	✘	✘	✔	✘	✘	✔	✘	✘	✔	✘
First Floor office accommodation			n.a	✘	✘	✔	✘	✘	✔	✔	✘	✘	✘	✘	✔
Furnishings - Used, Cleaned, Maintained and Controlled as appropriate															
Chairs, Desks, Tables, Filing cabinets etc			**As Appropriate**	✘	✘	✔	✘	✘	✔	✔	✔	✔	✔	✔	✔
Kitchen and Catering Equipment				✘	✘	✔	✘	✘	✔	✔	✔	✔	✔	✔	✔
Reception Desk & Furnishings				✘	✘	✔	✘	✘	✔	✔	✔	✔	✔	✔	✔
Control Room Furnishings				✘	✘	✔	✘	✘	✔	✔	✘	✔	✘	✘	✔
Lockers, Coat Rails etc				✘	✘	✔	✘	✘	✔	✔	✔	✔	✔	✔	✔
Training Room furnishings (Projector, Screen etc)				✘	✘	✔	✘	✘	✔	✔	✔	✔	✔	✔	✔
External															
Depot Yard				✘	✘	✔	✘	✘	✔	✔	✘	✘	✘	✘	✔
Depot Stabling Area				✘	✘	✔	✔	✔	✔	✔	✘	✘	✘	✘	✔
Electrical Sub Station				✔	✘	✘	✔	✘	✘	✔	✘	✘	✔	✘	✘
Power Energy Building (Electric, Gas etc)				✔	✘	✘	✔	✘	✘	✔	✘	✘	✔	✘	✘
Depot Car Park				✘	✘	✔	✘	✘	✔	✔	✘	✘	✘	✘	✔

Description	User Competence Assessor	Used by			Cleaned by				Maintained by				Access Controlled by			
		Infraco	Tram Maintainer	Transdev	Infraco	Tram Maintainer	CEC	Transdev	Infraco	Tram Maintainer	CEC	Transdev	Infraco	Tram Maintainer	CEC	Transdev
Miscellaneous																
Communication & Control links		N/A	N/A	N/A	✗	✗	✗	✗	✓	✗	✗	✗	✗	✗	✗	✓

	LEGEND
	Provided by Tram Maintainer
	Provided by the Infraco
✓	Responsible
✗	Not Responsible

Employer's Requirements

Erratum 035

Appendix 1 – ET Brand Guidelines

TIE00899939_0248

BRAND GUIDELINES JANUARY 2008

Edinburgh Trams

TIE00899939_0249

Contents

02 Forward

03 Section 1 The Edinburgh Trams Identity
Introduction
Glossary
Colour Glossary
Typography
Logo usage
Exclusion zone
Colours

13 Section 2 Communications
Stationery
Marketing
Passenger information
Web site
Pictograms

20 Section 3 The Tram
External design
Interior design

22 Section 4 Infrastructure
Tram stops
Signs
Colours

25 Section 5 Uniforms

27 Section 6 Contacts

Welcome to the Edinburgh Trams brand.

The Edinburgh Trams brand plays a crucial part in our communications with our customers and in creating a strong, memorable and recognisable image for the system. The brand has been specifically developed to sit alongside Lothian Buses as part of a co-ordinated presentation of public transport in Edinburgh.
For the strategy to succeed it is vital that all those involved in the delivery and service of the system adhere to the guidelines contained in this manual.
This will ensure that the Edinburgh Trams brand remains coherent and consistent. It is a well known fact that a well managed and consistently implemented brand helps inspire public confidence and trust.
By working within these guidelines you will help contribute to that process.

Phil Wheeler

Convener, Transport, Infrastructure and Environment
City of Edinburgh Council

Willie Gallaher
Chairman tie

David Mackay
Chairman TEL

TIE00899939_0251

Introduction

The elements and architecture of the Edinburgh Trams brand draw heavily from the Lothian Buses identity. This is to reinforce the strategy that has been adopted to create a genuinely integrated public transport system for Edinburgh.

Colours, typography and graphics are consistent between the two modes and are immediately recognisable as 'family members'.

The contents of this manual define how the branding must be implemented if the integrity of the visual relationship between the two modes is to be maintained.

In essence the branding is clean, simple and easy to understand - precisely the values the tram service provides.

TIE00899939_0252

Glossary

The key terms used in this document are as follows:

The Mark

A combination of the harlequins, the logotype and the red block.

The Logotype

The text of Edinburgh Trams set in Swiss 721BT. The logotype is used with the harlequins and the block in fixed relationships to form marks.

The Exclusion Zone

The minimum area around marks or logotypes that must be kept free of other graphic elements. This is to ensure that they are reproduced clearly and legibly without interference from other visual devices.

TIE00899939_0253

Guide to using the Mark

This page describes how the mark and the red block should be used.

Some simple rules are:

1. Never extend the red block unless the extended width of the red block to the left is more than 2 times the width of the mark and the extensions bleed off the page or media as illustrated by the header above. The extension to the right edge of the media should be half the width of the mark.

2. The red block should never be reduced in height when part of the mark alone but can be extended in height when the width is extended subject to rule 1.

3. The height should only be extended if the block is to bleed off the page or media.

TIE00899939_0254

Colour Glossary

To assist those who are involved in reproducing the Edinburgh Trams identity we have described here the primary specifications for print, screen and paint.

Print

PMS
This is short for the Pantone Matching System. This system is used to specify proprietary 'spot' colours. Spot colours are individually mixed for printing.

The letter 'C' after the colour number shows a colour's appearance on coated paper stock. The letter 'U' after the number shows a colour's appearance on uncoated paper stock.

CMYK
These initials represent the colours used in the four colour printing process: Cyan, Magenta, Yellow and Black (Kohl). Different combinations and percentages of these four colours are used to make matches to the 'spot' colours.

Screen

RGB
This is short for Red, Green, Blue the primary colours of light. RGB is used for reproduction on screens and electronic display systems.

Web
To make colours that can be reproduced on internet and intranet sites, Web safe colours should be specified. Web safe colours provide a greater degree of consistency than RGB colours when there is no control over the equipment used to view the site.

Paint

NCS
This is short for Natural Color System. NCS provides a wide range of colour specifications applicable to paints and other materials.

Other systems such as RAL and British Standard BS4800 have a limited number of Edinburgh Trams colour matches. Approval needs to be sought before using these systems.

TIE00899939_0255

Typography

We have two fonts: Humanist 521BT for general use and Swiss 721 BT which is only used to create the Logotype.

Only Roman, Bold and Light versions of Humanist 521 should be used with italic versions as appropriate.

Humanist 521 BT

Roman **Aa**

ABCDEFGHIJKLMNOPQRSTUVWXYZ
abcdefghijklmnopqrstuvwxyz
1234567890

Bold **Aa**

ABCDEFGHIJKLMNOPQRSTUVWXYZ
abcdefghijklmnopqrstuvwxyz
1234567890

Light Aa

ABCDEFGHIJKLMNOPQRSTUVWXYZ
abcdefghijklmnopqrstuvwxyz
1234567890

TIE00899939_0256

Mark usage

The mark shown here is the only acceptable version to be used.

No other colours should be used and the mark should never be stretched or the proportions altered in any way.

TIE00899939_0257

Mark usage

When using a single colour mark the version on the right shows how to reverse out of white while the version on the left demonstrates reversing from black or another colour.

TIE00899939_0258

Mark usage

Another option when using a single colour mark, for example when positioned over an image as illustrated here, is to use a transparent mark.

TIE00899939_0259

Exclusion Zone

The dotted line indicates the zone into which no other graphic devices should be placed.

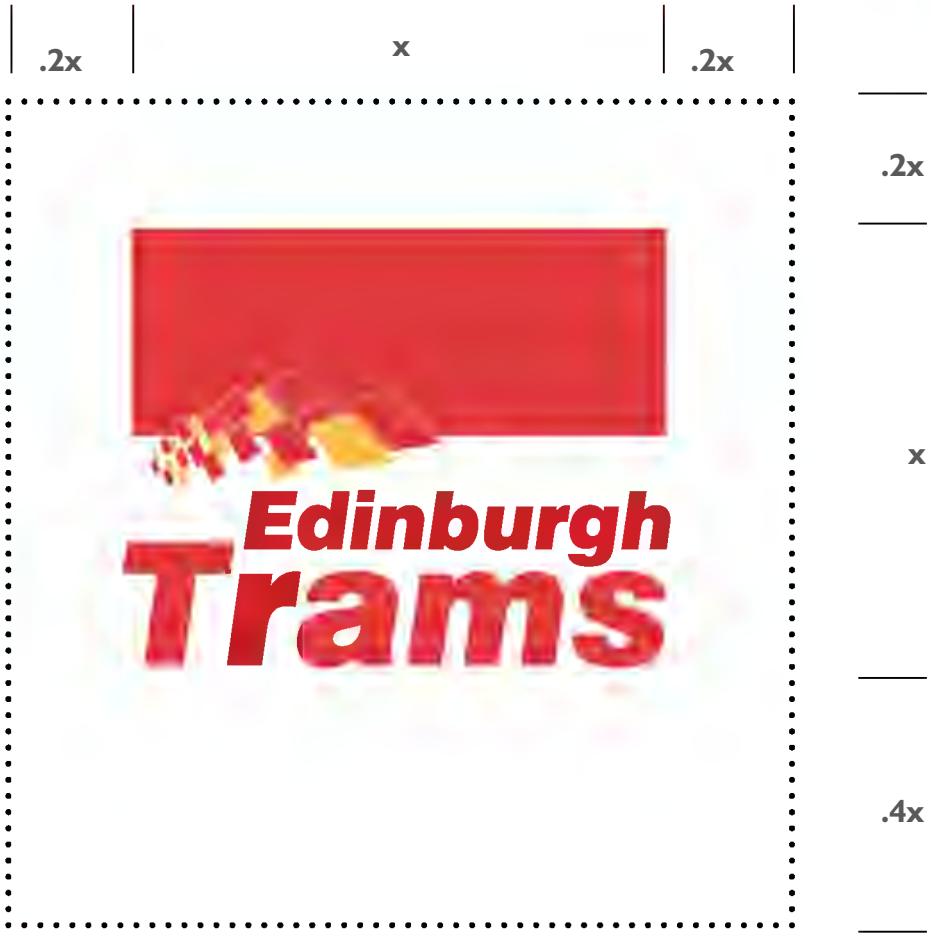

TIE00899939_0260

Colours

Three core colours make up the brand palette:
Red
Gold
Madder

In certain circumstances gold metallic ink in the form of PMS 873 can be used.

Print			Screen			Web		
Red	Gold	Madder						
PMS 186	PMS 124	PMS 188	R 227 G 25 B 55	R 238 G 178 B 17	R 139 G 15 B 4	R 227 G 25 B 55	R 238 G 178 B 17	R 139 G 15 B 4
C 0% M 100% Y 81% K 4%	C 0% M 28% Y 100% K 6%	C 0% M 97% Y 100% K 50%						

TIE00899939_0261

Stationery

Letterheads should follow the layout and formatting shown here. Guidance on fonts is provided in the typography section.

Edinburgh Trams

Mr G. McCluskey
19 Williams Street
Edinburgh
EH12 9QT

Edinburgh Trams Limited
City Point
Haymarket Terrace
Edinburgh
EH1 7YU

T : 0131 226 7896
F : 0131 226 7897
e mail info@tramsforedinburgh.com

24th November 2007

Our ref: ETL/1234

Dear Mr McCluskey

Lorem ipsum dolor sit amet, consectetuer adipiscing elit, sed diam nonummy nibh euismod tincidunt ut laoreet dolore magna aliquam erat volutpat. Ut wisi enim ad minim veniam, quis nostrud exercitation ullamcorper suscipit lobortis nisl ut aliquip ex ea commodo consequat. Duis autem vel eum iriure dolor in hendrerit in vulputatevelit esse molestie consequat, vel illum dolore eu feugiat nulla facilisis at vero eros et accumsan et iusto odio dignissim qui blandit praesent luptatum zzril delenit augue duis dolore te feugait nulla facilisi.

Yours sincerely

Andrew McKinnon

Operations Director

Lorem ipsum dolor sit amet, consectetuer adipiscing elit, sed diam nonummy nibh euismod

TIE00899939_0262

Stationery

Business cards follow the same format as the letterhead.

TIE00899939_0263

Marketing

The examples we show here illustrate the basic image and values the Edinburgh Tram brand should convey:

Clean

Simple

Easily understood

TIE00899939_0264

Passenger information

Again information should follow the 3 basic rules:

Clean

Simple

Easily understood

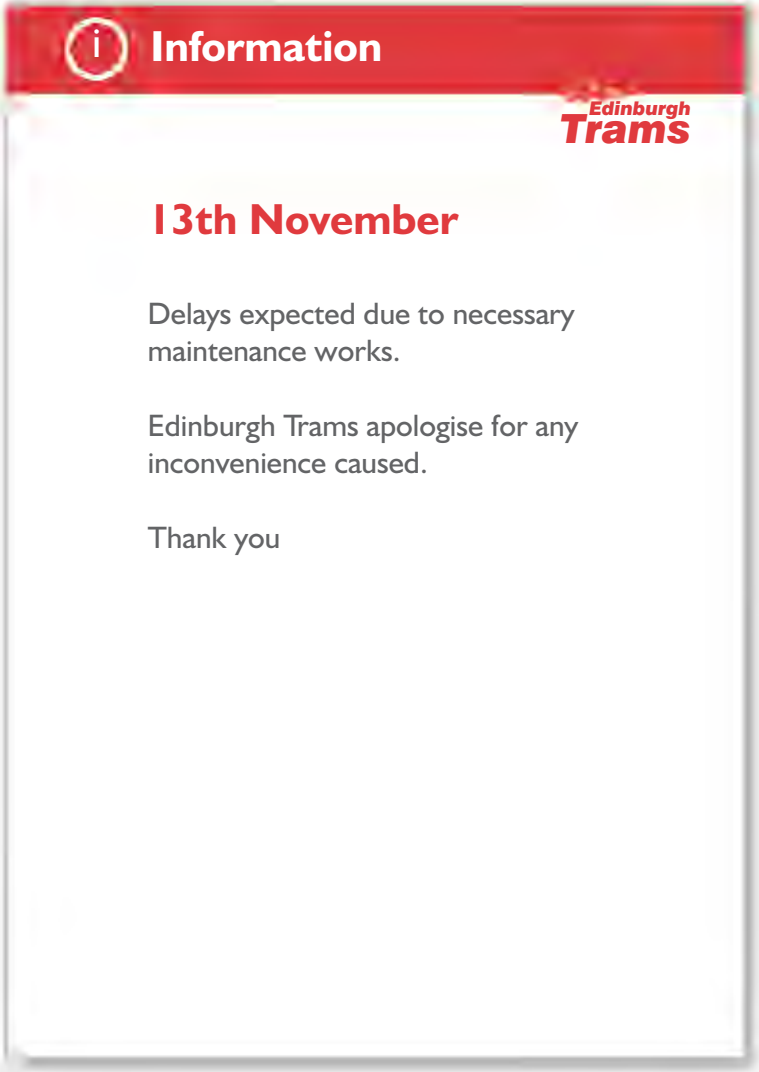

TIE00899939_0265

Passenger information

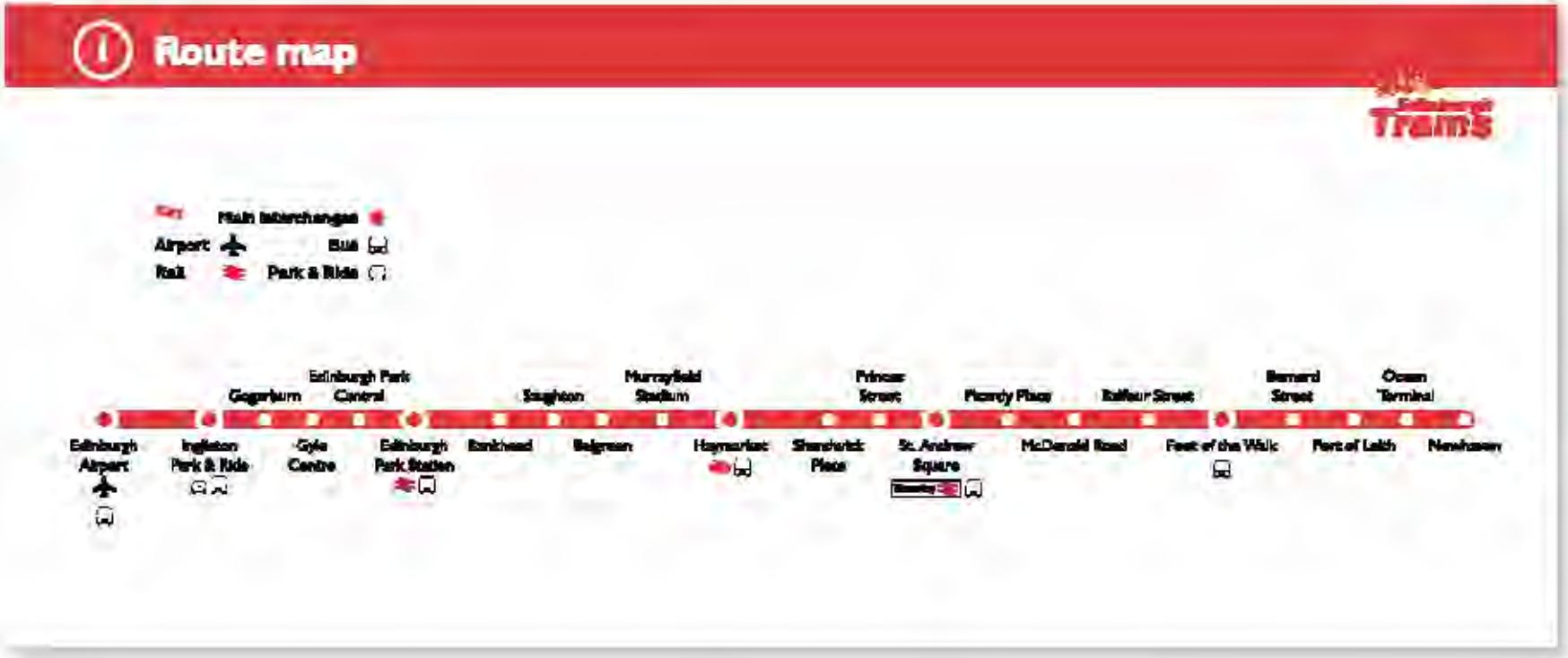

Web site

The web site should share the same layout and 'feel' as its sister site for Lothian Buses.

Consistency in navigation and layout help to reinforce the integrated transport concept.

TIE00899939_0267

Pictograms

Informational pictograms

Statutory pictograms

Directional pictograms

Space Bar Sample of Space Bar position

TIE00899939_0268

External design

Reinforcing the strategy of creating a visually integrated public transport system for Edinburgh, the tram livery draws from the Lothian Bus livery. Some modifications have been made in order to satisfy the Rail Vehicle Accessibility Regulations (RVAR) such as the red door colour that provides the required contrast of the doors from the tram body.

Colours follow the Brand palette with the exception of the 'gold' where, on the livery only, a gold vinyl is to be used as on Lothian Buses and not by using the specifications in this document.

Four designated advertising zones have been identified to control the revenue generating advertising presence that the business plan requires. Two trams have been allocated for 'all over' advertising and they will be subject to a strict, separate, design protocol.

TIE00899939_0269

Interior

As with the exterior the tram interior will use some of the same colours and finishes to be found on the buses. These will have to be adapted to ensure compliance with RVAR as there are strict technical guidelines on issues such as colour contrast based on Light Reflection Factors which affects all the visible surfaces within the vehicle. Compliance with RVAR is a legal requirement and the end result will be determined in consultation with the DfT Mobility Unit.

The image opposite is an early iteration of the proposed tram interior and will be developed through the process described above.

TIE00899939_0270

Tram stops

The finishes of the tram stop elements are generally of a neutral colouration.
The introduction of the Edinburgh Trams' key red as a highlight colour should therefore be used sparingly and appropriately as indicated here. The red has been introduced as an integral, functioning part of the shelter structure and serves to carry the high level stop sign. Elsewhere the red is introduced as signage or through information points.

Subtle use of the harlequins can be made on such areas as glazing manifestation as illustrated here. A further example of using the branding in a functional, rather than superficial, way.

TIE00899939_0271

Signage

The signage concept has been conceived to create strong, highly visible and legible points of reference and information.

As part of the tramstop elements they follow the principle of introducing the Edinburgh Trams key red in a controlled, functional manner whilst reinforcing the identity and aiding recognition.

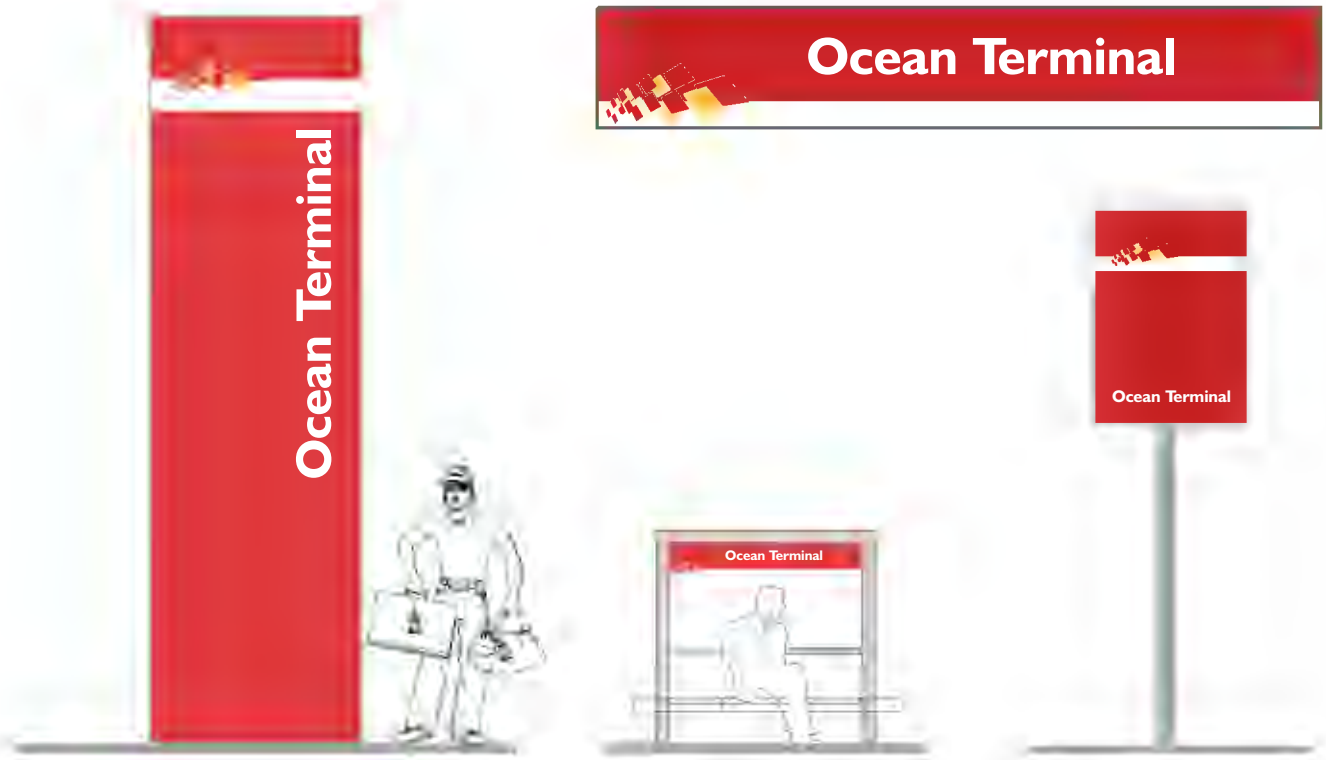

TIE00899939_0272

Colours

The red, madder and gold are freely available in a variety of finishes such as paint and powder coating by using the RAL specification here.

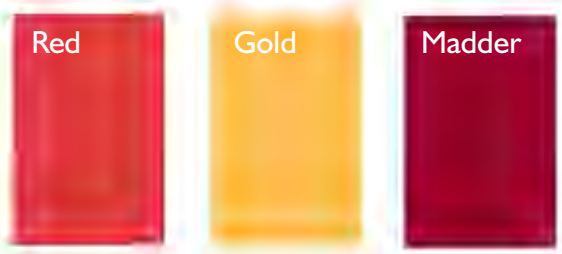

RAL 3020 RAL 1004 RAL 3005

TIE00899939_0273

Uniforms

To assist those who are involved in procuring the staff uniforms the following images are intended as a simple guide to make sure the image conveyed through the uniforms is consistent with other areas of the brand's application.

By keeping the uniforms neutral the key red can then be introduced as a detail. As with other elements of the system the red should be used sparingly as shown here.

TIE00899939_0274

Name badges

Name badges follow the guidelines established for communications.

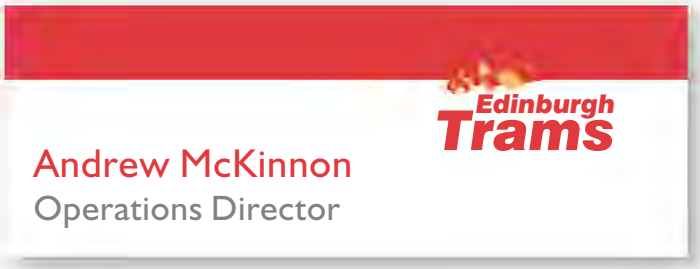

TIE00899939_0275

Contacts

For assistance with any aspect of the contents of these guidelines please contact either:

Jen Johnston
tie limited
Citypoint
65 Haymarket Terrace
Edinburgh
EH12 5HD

Tel: 0131 622 8330
Fax: 0131 622 8301
e mail: jen.johnston@tramsforedinburgh.com

or

Iain Coupar
Marketing Director
Transport Edinburgh
55 Annandale Street
Edinburgh
EH7 4AZ

Tel: 0131 554 4494
Fax: 0131 554 3942
e mail: icoupar@transportedinburgh.com

TIE00899939_0276

This is Schedule 2 referred to in the foregoing Agreement between tie and the Tram Supplier

SCHEDULE 2

Employer's Requirements

Part 1: Employer's Requirements

See separate volume V4.0

Table of Contents

Section	Clause Title	Page No	Tram Sections
1	**Introduction**	**22**	
1.1	Summary of Overall Scope	22	
1.2	Infraco Works	23	
1.3	Phase 1a Scope Statement Regarding Inclusion for the Phase 1b Option	26	
2	**Operations and Performance**	**28**	✓
2.1	Scope	28	✓
2.2	Network Description and Principles	28	✓
2.3	Specific Operations and Performance Requirements	33	✓
2.4	Tramstop Location and Types	33	✓
2.5	Expansion (including Line 3)	34	✓
2.6	Depot Locations	35	✓
2.7	Service Patterns, Operating Hours and Frequencies	36	✓
2.8	Operating Hours and Frequencies	38	✓
2.9	Service Frequencies and Expansion	44	✓
2.1	Special Working and Degraded Operation	44	✓
2.11	Journey Time and Runtime	46	✓
2.12	Journey Time and Runtime	47	✓
2.13	Operational Allowances and Rules for Timetabling	49	✓
2.14	Miscellaneous Operational Requirements	49	✓
2.15	Comfort Break Facilities	49	✓
2.16	Performance and Reliability	51	✓
2.17	Network and Service Pattern	53	✓
2.18	Layovers	53	✓
2.19	Calculation of Minimum Round Trip Times	53	✓
2.20	Summary to Establish Fleet Size	57	✓
2.21	Tram Fleet Kilometre Usage	59	✓
3	**General**	**60**	✓
3.1	Definitions	60	✓
3.2	Infraco Services	65	✓
3.3	General	65	✓
3.4	Management and Technical Services	65	✓
3.5	Summary of Deliverables	65	✓
3.6	Design	69	✓
3.6.1	General Obligations	69	✓
3.6.2	Design Approach	69	✓
3.6.3	Transport Modelling	70	✓
3.6.4	Environmental	71	✓
3.7	Construction-related Deliverables (Schedule 3 Requirements)	75	✓

3.8	Construction Advice and Buildability	77	✓
3.9	Site Support Facilities for tie	79	✓
3.9.1	Fittings and Furnishings	80	✓
3.9.2	Services	83	✓
3.9.3	Equipment	83	✓
3.9.4	Site Vehicles	84	✓
3.10	Spare Parts, Tools and Test Equipment	84	✓
3.11	Documentation	84	✓
3.12	Training	85	✓
4	**Use of Industry Standard Equipment**	**86**	✓
5	**System Identity and Branding**	**87**	✓
6	**Design Life**	**88**	✓
7	**Extensibility**	**90**	✓
8	**Standards**	**95**	✓
8.1	Principles	95	✓
8.2	Hierarchy of Precedence.	96	✓
8.3	The Infraco's Responsibilities	97	✓
8.3.1	Applicable Standards	98	✓
9	**Geotechnical**	**146**	
10	**Environment**	**147**	
10.1	Environmental Considerations	147	✓
10.1.1	General	147	✓
10.1.2	Freedom of Access to Environmental Information	148	✓
10.1.3	Relevant Legislation, Regulations and Guidance	149	✓
10.1.4	Code of Construction Practice	149	✓
10.1.5	tie's Noise and Vibration Policy	150	✓
10.1.6	The Tram Design Manual and Urban Design Briefs	150	✓
10.1.7	Landscape and Habitat Management Plan	150	
10.1.8	Badger Mitigation Plan	151	
10.1.9	Protected Species Plan	151	
10.1.10	Archaeological Requirements	151	
10.1.11	Landscape Design	151	
10.2	Ecological Design	152	
10.3	Construction of Ecological Measures	154	
10.3.1	General	154	
10.3.2	Site Supervision of Landscape and Ecological Works	154	
10.3.3	Landscape Works	154	
10.3.4	Completion of the Planting Works and Completion of the Landscape and Ecological Aftercare Works	155	
10.3.5	Construction Environmental Management Plan (CEMP)	155	
11	**Surveys**	**157**	
12	**Project Management Processes**	**159**	
12.1	Communication - General	159	✓
12.1.1	Meetings	159	✓
12.1.2	Progress Reporting	161	✓
12.1.3	Progress Photos	163	
12.1.4	Site Meeting Report	164	✓
12.1.5	Topic Register	164	✓
12.1.6	Work Breakdown Structure	164	✓
12.2	Programme Management	164	✓
12.3	Time Chainage	167	
12.4	Planning and Other Consents	167	✓
12.5	Project Management Plan	168	
12.5.1	General	168	

12.5.2	Resource and Competence	168	✓
12.5.3	Documentation	168	✓
12.5.4	Regulations	169	✓
12.5.5	Procedures	169	
12.5.6	Proposals on reporting and controlling design information requirements	169	
12.5.7	Interface Plans	169	✓
12.5.8	Design	169	✓
12.6	Construction Management Plan	170	✓
12.6.1	Mobilisation	170	✓
12.6.2	Plant	170	
12.6.3	Sub-Contractors	170	✓
12.6.4	Method Statements	170	✓
12.6.5	Avoidance of Disruption	170	
12.7	Network Rail Interface Plan	171	✓
12.8	Quality Management	172	✓
12.8.1	Document Standards and Control	173	✓
12.9	Infraco Performance Measurement	177	
12.10	Cost Management and Reporting	178	✓
12.11	Risk Management	180	✓
12.11.1	Project Objectives	180	✓
12.11.2	Risk Deliverables	181	✓
12.12	Traffic Management / Temporary Traffic Regulation Orders (TTROs)	185	
12.13	Stakeholder Management	189	
12.13.1	General	189	
12.13.2	Design	189	
12.13.3	Liaison and Public Information	189	
12.13.4	Information Centre	192	
12.13.5	Website	192	
12.13.6	Weekly Newsletter	193	
12.13.7	tie Monthly Newsletter	193	
12.13.8	Customer Contact Centre	194	
12.13.9	Communication Log	194	
13	**Permits / Approvals**	**197**	
13.1	Method Statements	197	
13.2	Existing Structures Which May Affect Progress and relationship with Third Parties	197	
13.3	Network Rail	198	✓
14	**Human Factors**	**199**	✓
15	**Reliability, Availability and Maintainability**	**201**	
15.1	Reliability and Availability	201	✓
15.2	Traction Power System	202	
15.3	Supervisory and Communications Systems.	203	
15.4	Maintainability	208	✓
15.5	Supportability	208	✓
16	**Electromagnetic Compatibility**	**209**	✓
16.1	EMC Directive	209	✓
16.2	Essential Protection Requirements	209	✓
17	**Health, Safety, Quality and Environment**	**210**	✓
17.1	Quality Management	210	✓
17.2	Health & Safety	211	✓
17.2.1	Safety Management Plan	211	✓
17.2.2	Occupational Health & Safety Management System	212	✓
17.2.3	Project Health & Safety Plan and Health & Safety File	212	✓
17.2.4	Interface with tie's Safety Systems	212	✓
17.2.5	System Safety Management Plan (SSMP)	213	✓

17.2.6	The Railways and Other Guided Transport Systems (Safety) Regulations 2006	213	✓
17.2.7	Health and Safety Management	214	✓
17.3	Environmental Management	217	✓
17.3.1	Environmental Management System	217	✓
17.3.2	Environmental and Sustainability Action Plan	217	✓
17.3.3	Construction Environmental Management Plan (CEMP)	218	
17.3.4	Requirement of Site Specific EMPs	219	
17.3.5	Permits to Work	221	
18	**Cabling and Ducting**	**222**	
18.1	Cabling	222	
18.2	Ducts	223	
18.3	Duct Chambers and Draw pits	225	
18.4	Cable separation	225	
18.5	Other requirements	226	
19	**Cabinets**	**227**	
20	**NOT USED**	**229**	
21	**Utilities / MUDFA**	**230**	
22	**Locks and Key Suiting**	**245**	
22.1	General	245	
22.2	Key Suiting System	245	
22.2.1	Tram	246	✓
22.2.2	Substations and Power	246	
22.2.3	Depot and buildings	246	
22.2.4	Signalling and Communication Equipment	247	
23	**Testing and Commissioning**	**248**	✓
23.1	Systems Acceptance	248	✓
23.1.1	Scope	248	✓
23.1.2	General Description and Principles	248	✓
23.2	Test Planning	253	✓
23.3	Pre-Systems Acceptance Testing (before starting the systems acceptance process)	253	✓
23.4	Factory Acceptance Tests (FAT)	254	✓
23.4.1	Overview	254	✓
23.4.2	Pass Criteria	255	✓
23.5	Site Tests	255	✓
23.5.1	Overview	255	✓
23.6	Sub-system Integration Tests (SIT)	256	✓
23.6.1	Overview	256	✓
23.6.2	Pass Criteria	257	✓
23.7	System Commissioning and Integration Tests (SCT)	257	✓
23.7.1	Overview	257	✓
23.7.2	Pass Criteria	257	✓
23.8	System Acceptance Activities and System Acceptance Tests	258	✓
23.9	Operations and Maintenance Staff Training	258	✓
23.10	Shadow Running	259	✓
23.11	Final System Acceptance Tests in the Operations and Maintenance Phase	259	✓
23.12	Emergency Exercises	260	✓
23.13	Post Commissioning Test Specification - T1	260	✓
23.13.1	Overview of Post Commissioning Test	262	✓
23.13.2	Test Objectives	262	✓
23.13.3	Network Performance Test Description	263	✓
23.13.4	Features	264	✓
23.13.5	Pass Criteria	265	✓
23.13.6	Monitoring and Reporting of Test Performance	265	✓
23.14	Performance Test 1 Specification - T2	265	✓

23.14.1	Overview	265	✓
23.14.2	Test Objectives	265	✓
23.14.3	Network Performance Test Description	267	✓
23.14.4	Features	267	✓
23.14.5	Pass Criteria	268	✓
23.14.6	Monitoring and Reporting of Test Performance	268	✓
23.15	Pre-Operations Test Specification - T3	269	✓
23.15.1	Overview	269	✓
23.15.2	Test Objectives	269	✓
23.15.3	Network Performance Test Description	269	✓
23.15.4	Features	270	✓
23.15.5	Pass Criteria	272	✓
23.15.6	Part 1 and 2 Pass Criteria	272	✓
23.15.7	Part 3 and 4 Pass Criteria	272	✓
23.15.8	Consents	273	✓
23.15.9	Monitoring and Reporting of Test Performance	273	✓
23.16	Network Performance Test Specification - T4	273	✓
23.16.1	Overview	273	✓
23.16.2	Pass Criteria	274	✓
23.16.3	Special Demonstrations	274	✓
23.16.4	Substation and UPS Demonstrations	274	✓
23.16.5	Tram Change Over	274	✓
23.16.6	Monitoring and Reporting of Test Performance	276	✓
23.16.7	Network Performance Test Timetable	277	✓
23.17	Network Reliability Test Specification - T5	277	✓
23.17.1	Overview	277	✓
23.17.2	Sub-Systems Subject to Network Reliability Test and Reliability targets	278	✓
23.17.3	NOT USED	279	✓
23.17.4	Assumptions and Exclusions	279	✓
23.17.5	Monitoring & Reporting of Test Performance	281	✓
23.17.6	Audit Procedures	281	✓
23.17.7	Services in Connection with the Operator	281	✓
23.18	Tram Testing and Commissioning	292	✓
23.18.1	Document Scope	292	✓
23.18.2	General Requirements	292	✓
23.18.3	Test Plan	292	✓
23.18.4	Tram Test Categories	293	✓
23.18.5	Test Certificates	294	✓
23.19	Factory Acceptance Tests (FAT)	294	✓
23.20	Delivery Acceptance Tests (DAT)	305	✓
23.20.1	Site Commissioning Tests	305	✓
23.20.2	Re-Testing	309	✓
23.20.3	Testing Support	309	✓
23.21	System Integration Tests (SIT)	314	✓
23.21.1	System Acceptance Testing	318	✓
24	**Trams**	**319**	✓
24.1	Scope	319	✓
24.2	General Technical Specification	319	✓
24.3	Wheel / Rail Interface	320	✓
24.4	Tramway Path	320	✓
24.5	Supervisory, Control & Communications Systems	321	✓
24.6	Depot Facilities	321	✓
24.7	Electro-Magnetic Compatibility	322	✓
24.8	Climate and Environment	322	✓

24.9	Interface Management	322	✓
24.10	Systems Assurance	322	✓
24.11	Noise and Vibration	323	✓
24.12	Specific Technical Requirements	323	✓
24.13	Driver's Cab	326	✓
24.14	Tram Controls	328	✓
24.15	Rear View Equipment	330	✓
24.16	Interior	331	✓
24.17	Bogies	336	✓
24.18	Re-Railing	338	✓
24.19	Propulsion Equipment	338	✓
24.20	Braking Equipment	339	✓
24.21	Run Time	340	✓
24.22	High-Voltage Equipment	342	✓
24.23	Auxiliary Power Supply Systems	342	✓
24.24	Faults and Diagnostic System	343	✓
24.25	Sanding System	344	✓
24.26	Passenger Doors	345	✓
24.27	Communication and Monitoring Systems (CCTV)	348	✓
24.28	Event Recorder	349	✓
24.29	Public Address System	350	✓
24.30	Passenger Information System	351	✓
24.31	Passenger and Inspector Alarm System	352	✓
24.32	Hauling or Propelling a Defective Tram	354	✓
24.33	Exterior Details and Livery	355	✓
24.34	Roof-Mounted Equipment	356	✓
24.35	Pantograph	357	✓
25	**Tramstops**	**359**	
25.1	General	359	
25.2	Tramstop Definition	360	
25.3	Tramstop Requirements	362	
25.3.1	General	362	
25.3.2	Platform Surface	363	
25.3.3	Tramstop Furniture and Equipment	363	
25.4	Description of Tramstop and Street Furniture	364	
25.4.1	General	364	
25.4.2	Shelters and Canopied Waiting Areas	365	
25.4.3	Tramstop Lighting Columns	366	
25.4.4	Tramstop Name Signs	367	
25.4.5	Advertising / Information Signs and Displays	367	
25.4.6	Litter Bins	368	
25.4.7	Public Address	368	
25.4.8	Tramstop CCTV	369	
25.4.9	Passenger Help Points and Passenger Emergency Help Points	369	
25.4.10	Guardrails, Handrails and Cycle Racks	369	
25.4.11	Seating	370	
25.4.12	Ticket Vending Machines (TVMs)	370	
25.5	Electrical (LV) and Communication Facilities	370	
25.6	Layover Facilities	371	
26	**Track**	**372**	
26.1	Track Layout	372	
26.2	Components	372	
26.3	General Requirements	373	
26.4	DKE, Structure Gauge and Clearances	375	✓

26.5	Trackforms	375	
26.6	Specific Technical Requirements	376	
26.7	The Wheel / Rail Interface	376	✓
26.8	Drainage	377	
26.9	Technical Requirements for Points and Crossings	377	
26.10	Technical Requirements for Point Operation	378	✓
26.10.1	Point Machines and Mechanisms in General	378	
26.10.2	Specific Requirements for Motorised Point Machines	380	
26.10.3	Specific Requirements for Sprung Point Mechanisms	381	
26.10.4	Specific Requirements for Bistable (flip-flop) Point Mechanisms	381	
26.10.5	Specific Requirements for Hand-Operated Point Mechanisms (Point Levers)	382	
26.11	Technical Requirements for Point Control and Indication	382	
26.11.1	Detection	382	
26.11.2	Control	383	
26.11.3	Indication	384	
26.11.4	Control Cabinet	385	
26.12	Indication of Hand Operated Point Mechanisms (Point Levers)	386	
26.13	Technical Requirements for Points Heating	386	
26.14	Tolerances	387	✓
27	**Roads and Utilities**	**399**	
27.1	General	399	
27.2	System-Wide Requirements	401	
27.3	General Requirements	401	
27.4	Stray Current	401	
27.5	Roads	402	
27.5.1	General	402	
27.5.2	Roads Design	402	
27.5.3	Road User Safety Audit	405	
27.5.4	Cycleways	405	
27.6	Drainage Including Track Drainage	406	
27.7	Road Signs, Traffic Signals and Urban Traffic Control	407	
27.8	Road Lighting and Road Furniture	407	
27.9	Utilities	408	
27.10	OLE Poles	409	
28	**Structures**	**410**	
28.1	General	410	
28.2	Structures List	410	
28.3	Proposed Structural Form	413	
28.4	Listed Structures	414	
28.5	Vibration and Noise	414	✓
28.6	Bearings and Movement Joints	414	
28.7	Design Life	414	
28.8	Design Standards	414	
28.9	Structure Loading	415	
28.10	Rail Break	415	
28.11	Clearances	415	✓
28.12	Finishes	416	
28.13	Protection	416	
28.14	Infrastructure Maintainability	416	
28.15	Provision for Inspection and Maintenance	417	
28.16	Bearings	417	
28.17	Expansion Joints	417	
28.18	Earthing and Bonding	417	
28.19	Protection against Stray Current	417	

28.20	Third Party Relationships	418	
28.20.1	Road Closure and Traffic Management	418	
28.20.2	Other Interested Parties	419	
28.20.3	Landscaping and Boundary Treatment	419	
29	**Depot**	**421**	✓
29.1	Scope	421	✓
29.2	Depot, Buildings and Associated External Works	421	✓
29.3	The Site	421	✓
29.4	Staff Halt	421	✓
29.5	Drainage	421	✓
29.6	Access	422	✓
29.7	Utilities	422	✓
29.8	Depot Site Layout	422	✓
29.9	Depot Building	425	✓
29.10	Schedule of Staff Numbers	426	✓
29.11	Accommodation (First floor)	430	✓
29.12	Workshop General Requirements	432	✓
29.13	Accommodation on Ground Floor	432	✓
29.13.1	General Facilities	432	✓
29.13.2	Facilities	433	✓
29.13.3	Tram Maintainer Specific Facilities	433	✓
29.13.4	Infrastructure Maintainer Specific Facilities	434	✓
29.14	Provisional Schedule of the Plant and Equipment	435	✓
29.15	Overhead Line Equipment	467	✓
29.16	Depot Substation Buildings and Associated External Works	467	✓
29.17	Depot Systems	468	✓
29.17.1	Electrical Supplies	468	✓
29.17.2	Specific Sub-System Technical Requirements	470	✓
29.17.3	Workshop Doors	472	✓
29.17.4	Hazardous Material Storage	473	✓
29.18	Equipment Room	473	✓
29.18.1	Fire Alarms / Fire Extinguishing System	473	✓
29.18.2	Heating and Ventilation	473	✓
29.18.3	Lighting	474	✓
29.18.4	Cable / Conduit Entry	474	✓
29.18.5	Architectural Requirements	474	✓
29.18.6	Security Requirements	475	✓
29.18.7	Equipment Room Furniture	475	✓
29.19	Mechanical and Public Health	475	✓
29.19.1	General	475	✓
29.19.2	Water	476	✓
29.19.3	Air Conditioning	476	✓
29.19.4	Ventilation	476	✓
29.19.5	Drainage Pad	476	✓
29.19.6	Mechanical Systems	477	✓
30	**Traction Power**	**478**	
30.1	General Requirements	478	
30.2	Traction Substations	479	
30.2.1	General	479	
30.2.2	Russell Road Track Paralleling Hut (applicable to Phase 1b only)	480	
30.2.3	Gogar Depot Substation	480	
30.3	System Protection Settings	481	
30.4	Power System Design Principles	481	
30.5	Scottish Power Interface (DNO)	486	

30.6	Multicore and Control Cabling	486	
30.7	Transformer Rectifiers	487	
30.7.1	General Arrangement	487	
30.7.2	Rating	488	
30.7.3	Voltage Regulation	488	✓
30.7.4	Voltage Ratio & Connections	488	
30.7.5	Voltage & Phase Tapping	488	
30.7.6	Transformer Cores	488	
30.7.7	Performance Under External Short Circuit	489	
30.7.8	Losses	489	
30.7.9	HV Cable Terminations	489	
30.7.10	Diodes	489	
30.7.11	Surge Protection	489	
30.7.12	Temperature Rise	490	
30.7.13	Protective Services	490	
30.7.14	Instrumentation	490	
30.7.15	Negative Isolation	491	
30.8	A.C. HV Switchgear	491	
30.9	D.C. Traction Supply Switchgear	491	
30.9.1	General	491	
30.9.2	Busbars	492	
30.9.3	System Voltage and Fault Level	493	
30.9.4	Temperature Rise	493	
30.9.5	Circuit Breaker Isolation	493	
30.9.6	Circuit Breakers	495	
30.9.7	Interlocks	496	
30.9.8	Protection Devices	496	
30.9.9	Control and Instrumentation	497	
30.9.10	Overhead Line Emergency Trip	498	
30.9.11	Circuit and Busbar Earthing	499	
30.9.12	Isolator Motorised Operation	499	
30.9.13	Bypass Isolator Over-current Feature	500	
30.10	Batteries and Chargers	500	
30.10.1	Scope and System Voltage	500	
30.10.2	Batteries	501	
30.10.3	Battery Duties	501	
30.10.4	Battery Accommodation	501	
30.10.5	Battery Chargers	501	
30.10.6	Alarm Devices	502	
30.10.7	Instrumentation	502	
30.10.8	Battery Distribution Board	502	
30.11	Earthing, Bonding, Surge Protection & Ancillary Equipment	503	
30.11.1	Earthing Systems	503	
30.11.2	Traction Negative Busbar System	504	
30.11.3	Surge Diverters	504	
30.11.4	Substation Ancillary Equipment	505	
30.12	Cables & Accessories	505	
30.12.1	General	505	
30.12.2	Types of Cables	506	
30.12.3	11kV A.C. Cable	506	
30.12.4	Traction Supply Cables	506	
30.12.5	Low Voltage Supply and Multicore Control Cables	507	
31	**Overhead Line Equipment**	**509**	
31.1	Scope	509	

31.2	General Requirements	509	
31.3	Equipment Overview	509	
31.4	Electrical Power Characteristics	509	
31.5	Environmental Considerations	510	
31.5.1	Ice Loading	510	
31.5.2	Pollution	510	
31.6	Material for Equipment	510	
31.7	Pole and Cantilever Tube Deflection Criteria	510	
31.8	Mechanical and Electrical Clearances	511	
31.9	Contact Wire Gradient and Geometry	511	✓
31.9.1	Contact Wire Height	511	✓
31.10	Structural Integrity	511	
31.11	Electromagnetic Compatibility	512	
31.12	Dynamic Performance	512	✓
31.13	Design Life	512	
31.14	Auto-Tensioned Equipment Types	512	✓
31.14.1	Form of Equipment	512	✓
31.14.2	Conductors and Tensioning Devices	512	✓
31.14.3	Tension Lengths	513	
31.14.4	Span Length	513	✓
31.14.5	Parallel Feeders	513	
31.15	Fixed Termination Equipment Types	513	✓
31.15.1	Form of Equipment	513	✓
31.15.2	Reduced Conductor Tension System	514	✓
31.16	Depot Equipment Type	514	✓
31.16.1	Equipment Support and Registration	514	
31.17	Overhead Line Equipment Poles and Equipment Enhancement	515	
31.17.1	Combined OLE / Lighting Poles	515	
31.17.2	Anchor Bolts, Foundations and Ties	516	
31.17.3	Foundations	516	
31.17.4	Fixing to Masonry and Concrete Structures	516	
31.18	Safe Working On The System	516	
31.19	Switching and Sectioning Requirements	517	
31.19.1	Sectioning	517	
31.19.2	Isolation Facilities	517	
31.20	Isolator Enclosures	517	
31.20.1	Paint Finish	518	
31.20.2	Labelling	518	
31.20.3	Isolators	518	
31.21	Power Feeder, Reinforcing and Bonding Cables	519	
31.21.1	Feeder Cables	519	
31.21.2	Track to Traction Substation (TSS) Negative Return Cables	521	
31.21.3	Rail to Rail and Track to Track Traction Cross Bonds	521	
31.21.4	Running Rail Continuity Cables	521	
31.21.5	General Requirements for Cables	522	
31.21.6	Cable Ducts	522	
31.21.7	Installation of Cables	523	
31.21.8	Surge Diverters	523	
31.21.9	Bonding	523	
32	**Stray Current**	**524**	
33	**Low Voltage Architecture**	**525**	
34	**Earthing and Bonding**	**527**	
35	**Supervisory Control and Communications Systems**	**528**	
35.1	Scope	528	

35.2	Specific Technical Requirements	528	
35.3	Tram Position and Detection System	529	✓
35.3.1	Overview	529	
35.3.2	Technical Requirements	531	
35.3.3	Tram-Borne Equipment	533	
35.4	Passenger Information Display System (PIDS)	533	
35.4.1	Overview	533	
35.5	Telephone Network	536	
35.5.1	Overview	536	
35.5.2	Technical Requirements	537	
35.6	Public Address System	538	
35.6.1	Overview	538	
35.6.2	Technical Requirements	539	
35.7	Operational Radio System (ORS)	540	✓
35.7.1	Overview	540	
35.7.2	General Requirements	541	
35.7.3	Short Codes	542	
35.7.4	Physical Considerations	543	
35.7.5	Radio Maintainers' Workstation	544	
35.7.6	Road Vehicle Mobile Radio Equipment	544	
35.7.7	Hand-Held Mobile Radio Equipment	545	
35.7.8	Tram borne Radio Equipment	546	
35.7.9	Tram-Borne Interfaces	547	
35.8	Passenger Help / Passenger Emergency Help Points	547	
35.8.1	Overview	547	
35.8.2	Technical Requirements	548	
35.9	Closed Circuit Television	548	
35.9.1	Overview	548	
35.9.2	Technical Requirements	549	
35.10	Supervisory Control and Data Acquisition	551	
35.10.1	Overview	551	
35.10.2	General Requirements	552	
35.10.3	Traction Power SCADA	553	
35.10.4	Tramstop SCADA	555	
35.10.5	Trackside SCADA	556	
35.10.6	Fare Collection SCADA	557	
35.11	Operational Data Network	557	
35.11.1	Overview	557	
35.11.2	Location of Nodes	560	
35.11.3	General Requirements	562	
35.12	Considerations applying to all Communications Subsystems	563	
35.12.1	Electrical Connections	563	
35.12.2	Cabinets	563	
35.12.3	Alarming of Faults	564	
35.13	Control Centre	564	
35.13.1	Control Centre - Overview	564	
35.13.2	Workstation Capabilities	566	
35.13.3	Control Centre Philosophy	576	
35.13.4	Emergency Telephone Lines	578	
35.13.5	Local Area Network	579	
35.13.6	Control Centre Time Display	580	
35.13.7	Safety Requirements	580	
35.13.8	Electrical Requirements	580	
35.13.9	Logging	581	

35.13.10	Central Data Recording	582	
35.13.11	Printers	583	
35.13.12	Control Centre Furniture	583	
35.13.13	Spare Capacity / System Expansion	584	
35.14	Equipment Room	584	
35.14.1	Overview	584	
35.14.2	Maintainer's Positions	585	
35.14.3	Security and Access Control	585	
35.14.4	Layout	586	
35.14.5	Equipment Housings and Mounting	586	
35.14.6	Diagnostic, Maintenance or Offline Mode Indications	586	
35.14.7	Equipment Power Supplies	586	
35.14.8	Storage	587	
35.14.9	Spare Capacity / System Expansion	587	
35.14.10	Master Clock and System Clocks	588	
35.14.11	Performance Monitoring System	588	
35.14.12	Monitor Matrix Display Driver	589	
35.14.13	Central Data Recording	589	
35.14.14	Voice Recording	590	
35.14.15	Equipment Room Maintainer Desks	592	
35.14.16	Equipment Room Local Area Network Requirements	593	
35.14.17	Other Systems	593	
36	**Integrated Fare Collection**	**594**	
36.1	Scope	594	
36.2	Procurement	594	
36.3	General Technical Specification	594	
36.4	Integrated Fare Collection	594	
36.5	Ticket Vending Machines and Validators	595	
36.5.1	General	595	
36.5.2	Docking Stations for Hand-Held Ticket Machines	595	
36.5.3	Equipment Interfaces	596	
37	**System Integration**	**597**	✓
37.1	Introduction	597	✓
37.2	Definitions	597	✓
37.3	Principle	598	✓
37.4	Inter-contract Integration, Integration of third party and free issue equipment	598	✓
37.5	Formal Roles to be undertaken by the Infraco	598	✓
37.5.1	System Design Authority	598	✓
37.5.2	System Integrator	599	✓
38	**Location Specific Requirements**	**601**	
39	**Project Programme**	**603**	✓
39.1	Introduction	603	✓
39.2	Key Dates	603	✓
39.3	Basis for Programme	605	✓
39.4	Third Party Agreements	606	✓
39.5	P3e Activity Code Dictionary (Mandatory Codes)	608	✓
40	**Maintenance**	**614**	✓
40.1	Scope	614	✓
40.1.1	General	614	✓
40.1.2	Overall Objectives	615	✓
40.2	Infrastructure Maintenance Requirements	617	✓
40.2.1	Purpose	617	✓
40.2.2	Scope	617	✓
40.2.3	Maintenance Approach	640	✓

40.2.4	Maintenance Strategy	641	✓
40.2.5	Organisation, Training and Competency	648	✓
40.2.6	Quality, Health, Safety and Environmental	650	✓
40.2.7	Liaison with tie and Other Parties on Maintenance Related Issues	653	✓
40.2.8	Reporting	654	✓
40.2.9	Infrastructure Maintenance Plan - Overview	656	✓
40.2.10	Development of the Plan	656	✓
40.2.11	Tools	657	✓
40.2.12	Availability and Warranty	657	✓
40.2.13	Asset Management System	658	✓
40.2.14	Work Instructions	658	✓
40.2.15	Minimum Spare Parts Holdings	659	✓
40.2.16	Maintenance Records	659	✓
40.2.17	Indicative Scope	660	✓
40.2.18	Cleaning Maintenance Plan	661	✓
40.2.19	Track and Infrastructure Cleaning	662	✓
40.2.20	Depot Building and Yard, Offices and Car Park	662	✓
40.2.21	Cleaning Records	663	✓
40.3	Tram Maintenance Strategy	663	✓
40.3.1	Purpose	663	✓
40.3.2	Scope	663	✓
40.3.3	Organisation, Training, and Competency	667	✓
40.3.4	Quality, Health, Safety, & Environment	667	✓
40.3.5	Liaison with Promoter & Other Parties on Maintenance Related Issues	668	✓
40.3.6	Tram Servicing and Maintenance Plan	669	✓
40.3.7	Maintenance Plan Overview	669	✓
40.3.8	Maintenance Strategy	669	✓
40.3.9	Availability and Warranty	672	✓
40.3.10	Technical Management	673	✓
40.3.11	Work Instructions	673	✓
40.3.12	Minimum Spare Parts Holdings	674	✓
40.3.13	Cleaning Maintenance Plan	675	✓
40.4	Maintainability, Maintenance and Spares	675	✓
40.4.1	General	675	✓
40.4.2	Structures and Civil Engineering	677	✓
40.4.3	Track	677	✓
40.4.4	Training	677	✓
40.4.5	Infrastructure and Trams	678	✓
40.4.6	Maintenance Training	680	✓
40.4.7	Operational Training	681	✓
40.5	Information Procedures, Records and Manuals	681	✓
40.5.1	General	681	✓
40.5.2	Information	682	✓
40.5.3	Operation and Maintenance Manuals Information	682	✓
40.5.4	Asset Register	686	✓
40.5.5	Provisional List of Operating Procedures and Standards	687	✓

Document Management Sheet – Employer's Requirements

3.6	Version updated to include: 1) Legal alignment changes agreed on meeting at Tuesday 11.03.08 2) Technical adjustments by RK and AS 3) CEC changes that resulted from their review 4) Revised s26	14/03/08	14/03/08		
3.6a	Version updated to include: 5) Revised s28.13 6) Revised s23 7) Ref check – not complete. 8) Incorporation of DLA (SF) checks. 9) Depot Scope changes.	19/03/08	19/03/08	SH	
3.6b	Updated as per Pinsents comments 03.04.08	03.04.08		MC/SH	
3.6b	For issue	07.04.08	07.04.08	SH	GG/SB
4.0	Final	16.04.08	16.04.08	SH	GG/SB
Version	Summary	Date	Modified	Checked	Approved

Trams for Edinburgh

..connecting our Capital

Edinburgh Tram Network

Employer's Requirements

Edition: v4.0 April 2008

DOC.NO.	VERSION	STATUS	DATE	SHEET
PRO-INFRACO-1399	4.0	FOR ISSUE	16/04/2008	2

Employer's Requirements © **tie** Ltd 2007-2008.

All Rights Reserved. No part of this manual may be reproduced or transmitted in any form or by any means, electronic or mechanical, including photocopying, recording, or by any information storage and retrieval system, without permission in writing from **tie** Ltd.

V 4.0

Table of Contents

1 Introduction 22
1.1 Summary of Overall Scope 22
1.2 Infraco Works 23
1.3 Phase 1a Scope Statement Regarding Inclusion for the Phase 1b Option 26
2 Operations and Performance 28
2.1 Scope 28
2.2 Network Description and Principles 28
2.3 Specific Operations and Performance Requirements 33
2.4 Tramstop Location and Types 33
2.5 Expansion (including Line 3) 34
2.6 Depot Locations 35
2.7 Service Patterns, Operating Hours and Frequencies 36
2.8 Operating Hours and Frequencies 38
2.9 Service Frequencies and Expansion 44
2.10 Special Working and Degraded Operation 44
2.11 Journey Time and Runtime 46
2.12 Journey Time and Runtime 47
2.13 Operational Allowances and Rules for Timetabling 48
2.14 Miscellaneous Operational Requirements 48
2.15 Comfort Break Facilities 48
2.16 Performance and Reliability 50
2.17 Network and Service Pattern 52
2.18 Layovers 52
2.19 Calculation of Minimum Round Trip Times 52
2.20 Summary to Establish Fleet Size 56
2.21 Tram Fleet Kilometre Usage 58
3 General 59
3.1 Definitions 59
3.2 Infraco Services 64
3.3 General 64
3.4 Management and Technical Services 64
3.5 Summary of Deliverables 64
3.6 Design 68
3.6.1 General Obligations 68
3.6.2 Design Approach 68
3.6.3 Transport Modelling 69
3.6.4 Environmental 70

3.7 Construction-related Deliverables (Schedule 3 Requirements) 74
3.8 Construction Advice and Buildability 75
3.9 Site Support Facilities for tie 76
3.9.1 Fittings and Furnishings 77
3.9.2 Services 80
3.9.3 Equipment 80
3.9.4 Site Vehicles 81
3.10 Spare Parts, Tools and Test Equipment 81
3.11 Documentation 81
3.12 Training 82
4 Use of Industry Standard Equipment 83
5 System Identity and Branding 84
6 Design Life 85
7 Extensibility 87
8 Standards 92
8.1 Principles 92
8.2 Hierarchy of Precedence. 93
8.3 The Infraco's Responsibilities 94
8.3.1 Applicable Standards 95
9 Geotechnical 143
10 Environment 144
10.1 Environmental Considerations 144
10.1.1 General 144
10.1.2 Freedom of Access to Environmental Information 145
10.1.3 Relevant Legislation, Regulations and Guidance 146
10.1.4 Code of Construction Practice 146
10.1.5 tie's Noise and Vibration Policy 147
10.1.6 The Tram Design Manual and Urban Design Briefs 147
10.1.7 Landscape and Habitat Management Plan 147
10.1.8 Badger Mitigation Plan 148
10.1.9 Protected Species Plan 148
10.1.10 Archaeological Requirements 148
10.1.11 Landscape Design 148
10.2 Ecological Design 149
10.3 Construction of Ecological Measures 151
10.3.1 General 151
10.3.2 Site Supervision of Landscape and Ecological Works 151
10.3.3 Landscape Works 151

10.3.4 Completion of the Planting Works and Completion of the Landscape and Ecological Aftercare Work 152
10.3.5 Construction Environmental Management Plan (CEMP) 152
11 Surveys 154
12 Project Management Processes 156
12.1 Communication – General 156
12.1.1 Meetings 156
12.1.2 Progress Reporting 158
12.1.3 Progress Photos 160
12.1.4 Site Meeting Report 161
12.1.5 Topic Register 161
12.1.6 Work Breakdown Structure 161
12.2 Programme Management 161
12.3 Time Chainage 164
12.4 Planning and Other Consents 164
12.5 Project Management Plan 165
12.5.1 General 165
12.5.2 Resource and Competence 165
12.5.3 Documentation 165
12.5.4 Regulations 166
12.5.5 Procedures 166
12.5.6 Proposals on reporting and controlling design information requirements 166
12.5.7 Interface Plans 166
12.5.8 Design 166
12.6 Construction Management Plan 167
12.6.1 Mobilisation 167
12.6.2 Plant 167
12.6.3 Sub-Contractors 167
12.6.4 Method Statements 167
12.6.5 Avoidance of Disruption 167
12.7 Network Rail Interface Plan 168
12.8 Quality Management 169
12.8.1 Document Standards and Control 170
12.9 Infraco Performance Measurement 174
12.10 Cost Management and Reporting 175
12.11 Risk Management 177
12.11.1 Project Objectives 177
12.11.2 Risk Deliverables 178
12.12 Traffic Management / Temporary Traffic Regulation Orders (TTROs) 182

12.13 Stakeholder Management 186
12.13.1 General 186
12.13.2 Design 186
12.13.3 Liaison and Public Information 186
12.13.4 Information Centre 189
12.13.5 Website 189
12.13.6 Weekly Newsletter 190
12.13.7 tie Monthly Newsletter 190
12.13.8 Customer Contact Centre 191
12.13.9 Communication Log 191
13 Permits / Approvals 194
13.1 Method Statements 194
13.2 Existing Structures Which May Affect Progress and relationship with Third Parties 194
13.3 Network Rail 195
14 Human Factors 196
15 Reliability, Availability and Maintainability 198
15.1 Reliability and Availability 198
15.2 Traction Power System 199
15.3 Supervisory and Communications Systems. 200
15.4 Maintainability 205
15.5 Supportability 205
16 Electromagnetic Compatibility 206
16.1 EMC Directive 206
16.2 Essential Protection Requirements 206
17 Health, Safety, Quality and Environment 207
17.1 Quality Management 207
17.2 Health & Safety 208
17.2.1 Safety Management Plan 208
17.2.2 Occupational Health & Safety Management System 209
17.2.3 Project Health & Safety Plan and Health & Safety File 209
17.2.4 Interface with tie's Safety Systems 209
17.2.5 System Safety Management Plan (SSMP) 210
17.2.6 The Railways and Other Guided Transport Systems (Safety) Regulations 2006 210
17.2.7 Health and Safety Management 211
17.3 Environmental Management 214
17.3.1 Environmental Management System 214
17.3.2 Environmental and Sustainability Action Plan 214
17.3.3 Construction Environmental Management Plan (CEMP) 215
17.3.4 Requirement of Site Specific EMPs 216

17.3.5 Permits to Work 218
18 Cabling and Ducting 219
18.1 Cabling 219
18.2 Ducts 220
18.3 Duct Chambers and Draw pits 222
18.4 Cable separation 222
18.5 Other requirements 223
19 Cabinets 224
20 NOT USED 226
21 Utilities / MUDFA 227
22 Locks and Key Suiting 242
22.1 General 242
22.2 Key Suiting System 242
22.2.1 Tram 243
22.2.2 Substations and Power 243
22.2.3 Depot and buildings 243
22.2.4 Signalling and Communication Equipment 244
23 Testing and Commissioning 245
23.1 Systems Acceptance 245
23.1.1 Scope 245
23.1.2 General Description and Principles 245
23.2 Test Planning 250
23.3 Pre-Systems Acceptance Testing (before starting the systems acceptance process) 250
23.4 Factory Acceptance Tests (FAT) 251
23.4.1 Overview 251
23.4.2 Pass Criteria 252
23.5 Site Tests 252
23.5.1 Overview 252
23.6 Sub-system Integration Tests (SIT) 253
23.6.1 Overview 253
23.6.2 Pass Criteria 254
23.7 System Commissioning and Integration Tests (SCT) 254
23.7.1 Overview 254
23.7.2 Pass Criteria 254
23.8 System Acceptance Activities and System Acceptance Tests 255
23.9 Operations and Maintenance Staff Training 255
23.10 Shadow Running 256
23.11 Final System Acceptance Tests in the Operations and Maintenance Phase 256
23.12 Emergency Exercises 257

23.13 Post Commissioning Test Specification – T1 257
23.13.1 Overview of Post Commissioning Test....259
23.13.2 Test Objectives....259
23.13.3 Network Performance Test Description....260
23.13.4 Features....261
23.13.5 Pass Criteria 262
23.13.6 Monitoring and Reporting of Test Performance 262
23.14 Performance Test 1 Specification – T2 262
23.14.1 Overview....262
23.14.2 Test Objectives....262
23.14.3 Network Performance Test Description....264
23.14.4 Features....264
23.14.5 Pass Criteria 265
23.14.6 Monitoring and Reporting of Test Performance 265
23.15 Pre-Operations Test Specification – T3 266
23.15.1 Overview....266
23.15.2 Test Objectives....266
23.15.3 Network Performance Test Description....266
23.15.4 Features....267
23.15.5 Pass Criteria 269
23.15.6 Part 1 and 2 Pass Criteria....269
23.15.7 Part 3 and 4 Pass Criteria....269
23.15.8 Consents 270
23.15.9 Monitoring and Reporting of Test Performance 270
23.16 Network Performance Test Specification – T4....270
23.16.1 Overview....270
23.16.2 Pass Criteria 271
23.16.3 Special Demonstrations 271
23.16.4 Substation and UPS Demonstrations 271
23.16.5 Tram Change Over 271
23.16.6 Monitoring and Reporting of Test Performance 273
23.16.7 Network Performance Test Timetable....274
23.17 Network Reliability Test Specification – T5....274
23.17.1 Overview....274
23.17.2 Sub-Systems Subject to Network Reliability Test and Reliability targets....275
23.17.3 NOT USED....276
23.17.4 Assumptions and Exclusions 276
23.17.5 Monitoring & Reporting of Test Performance 278
23.17.6 Audit Procedures 278

23.17.7 Services in Connection with the Operator....278
23.18 Tram Testing and Commissioning....289
23.18.1 Document Scope....289
23.18.2 General Requirements....289
23.18.3 Test Plan....289
23.18.4 Tram Test Categories....290
23.18.5 Test Certificates....291
23.19 Factory Acceptance Tests (FAT)....291
23.20 Delivery Acceptance Tests (DAT)....302
23.20.1 Site Commissioning Tests....302
23.20.2 Re-Testing....306
23.20.3 Testing Support....306
23.21 System Integration Tests (SIT)....311
23.21.1 System Acceptance Testing....315
24 Trams....316
24.1 Scope....316
24.2 General Technical Specification....316
24.3 Wheel / Rail Interface....317
24.4 Tramway Path....317
24.5 Supervisory, Control & Communications Systems....318
24.6 Depot Facilities....318
24.7 Electro-Magnetic Compatibility....319
24.8 Climate and Environment....319
24.9 Interface Management....319
24.10 Systems Assurance....319
24.11 Noise and Vibration....320
24.12 Specific Technical Requirements....320
24.13 Driver's Cab....323
24.14 Tram Controls....325
24.15 Rear View Equipment....327
24.16 Interior....328
24.17 Bogies....333
24.18 Re-Railing....335
24.19 Propulsion Equipment....335
24.20 Braking Equipment....336
24.21 Run Time....337
24.22 High-Voltage Equipment....339
24.23 Auxiliary Power Supply Systems....339
24.24 Faults and Diagnostic System....340

24.25 Sanding System 341
24.26 Passenger Doors 342
24.27 Communication and Monitoring Systems (CCTV) 345
24.28 Event Recorder 346
24.29 Public Address System 347
24.30 Passenger Information System 348
24.31 Passenger and Inspector Alarm System 349
24.32 Hauling or Propelling a Defective Tram 351
24.33 Exterior Details and Livery 352
24.34 Roof-Mounted Equipment 353
24.35 Pantograph 354
25 Tramstops 356
25.1 General 356
25.2 Tramstop Definition 357
25.3 Tramstop Requirements 359
25.3.1 General 359
25.3.2 Platform Surface 360
25.3.3 Tramstop Furniture and Equipment 360
25.4 Description of Tramstop and Street Furniture 361
25.4.1 General 361
25.4.2 Shelters and Canopied Waiting Areas 362
25.4.3 Tramstop Lighting Columns 363
25.4.4 Tramstop Name Signs 364
25.4.5 Advertising / Information Signs and Displays 364
25.4.6 Litter Bins 365
25.4.7 Public Address 365
25.4.8 Tramstop CCTV 366
25.4.9 Passenger Help Points and Passenger Emergency Help Points 366
25.4.10 Guardrails, Handrails and Cycle Racks 366
25.4.11 Seating 367
25.4.12 Ticket Vending Machines (TVMs) 367
25.5 Electrical (LV) and Communication Facilities 367
25.6 Layover Facilities 368
26 Track 369
26.1 Track Layout 369
26.2 Components 369
26.3 General Requirements 370
26.4 DKE, Structure Gauge and Clearances 372
26.5 Trackforms 372

26.6 Specific Technical Requirements 373
26.7 The Wheel / Rail Interface 373
26.8 Drainage 374
26.9 Technical Requirements for Points and Crossings 374
26.10 Technical Requirements for Point Operation 375
26.10.1 Point Machines and Mechanisms in General 375
26.10.2 Specific Requirements for Motorised Point Machines 377
26.10.3 Specific Requirements for Sprung Point Mechanisms 378
26.10.4 Specific Requirements for Bistable (flip-flop) Point Mechanisms 378
26.10.5 Specific Requirements for Hand-Operated Point Mechanisms (Point Levers) 379
26.11 Technical Requirements for Point Control and Indication 379
26.11.1 Detection 379
26.11.2 Control 380
26.11.3 Indication 381
26.11.4 Control Cabinet 382
26.12 Indication of Hand Operated Point Mechanisms (Point Levers) 383
26.13 Technical Requirements for Points Heating 383
26.14 Tolerances 384
27 Roads and Utilities 396
27.1 General 396
27.2 System-Wide Requirements 398
27.3 General Requirements 398
27.4 Stray Current 398
27.5 Roads 399
27.5.1 General 399
27.5.2 Roads Design 399
27.5.3 Road User Safety Audit 402
27.5.4 Cycleways 402
27.6 Drainage Including Track Drainage 403
27.7 Road Signs, Traffic Signals and Urban Traffic Control 404
27.8 Road Lighting and Road Furniture 404
27.9 Utilities 405
27.10 OLE Poles 405
28 Structures 406
28.1 General 406
28.2 Structures List 406
28.3 Proposed Structural Form 409
28.4 Listed Structures 410
28.5 Vibration and Noise 410

28.6 Bearings and Movement Joints 410
28.7 Design Life 410
28.8 Design Standards 410
28.9 Structure Loading 411
28.10 Rail Break 411
28.11 Clearances 411
28.12 Finishes 412
28.13 Protection 412
28.14 Infrastructure Maintainability 412
28.15 Provision for Inspection and Maintenance 413
28.16 Bearings 413
28.17 Expansion Joints 413
28.18 Earthing and Bonding 413
28.19 Protection against Stray Current 413
28.20 Third Party Relationships 414
28.20.1 Road Closure and Traffic Management 414
28.20.2 Other Interested Parties 415
28.20.3 Landscaping and Boundary Treatment 415
29 Depot 417
29.1 Scope 417
29.2 Depot, Buildings and Associated External Works 417
29.3 The Site 417
29.4 Staff Halt 417
29.5 Drainage 417
29.6 Access 418
29.7 Utilities 418
29.8 Depot Site Layout 418
29.9 Depot Building 421
29.10 Schedule of Staff Numbers 422
29.11 Accommodation (First floor) 426
29.12 Workshop General Requirements 428
29.13 Accommodation on Ground Floor 428
29.13.1 General Facilities 428
29.13.2 Facilities 429
29.13.3 Tram Maintainer Specific Facilities 429
29.13.4 Infrastructure Maintainer Specific Facilities 430
29.14 Provisional Schedule of the Plant and Equipment 431
29.15 Overhead Line Equipment 463
29.16 Depot Substation Buildings and Associated External Works 463

29.17 Depot Systems 464
29.17.1 Electrical Supplies 464
29.17.2 Specific Sub-System Technical Requirements 466
29.17.3 Workshop Doors 468
29.17.4 Hazardous Material Storage 469
29.18 Equipment Room 469
29.18.1 Fire Alarms / Fire Extinguishing System 469
29.18.2 Heating and Ventilation 469
29.18.3 Lighting 470
29.18.4 Cable / Conduit Entry 470
29.18.5 Architectural Requirements 470
29.18.6 Security Requirements 471
29.18.7 Equipment Room Furniture 471
29.19 Mechanical and Public Health 471
29.19.1 General 471
29.19.2 Water 472
29.19.3 Air Conditioning 472
29.19.4 Ventilation 472
29.19.5 Drainage Pad 472
29.19.6 Mechanical Systems 473
30 Traction Power 474
30.1 General Requirements 474
30.2 Traction Substations 475
30.2.1 General 475
30.2.2 Russell Road Track Paralleling Hut (applicable to Phase 1b only) 476
30.2.3 Gogar Depot Substation 476
30.3 System Protection Settings 477
30.4 Power System Design Principles 477
30.5 Scottish Power Interface (DNO) 479
30.6 Multicore and Control Cabling 480
30.7 Transformer Rectifiers 480
30.7.1 General Arrangement 480
30.7.2 Rating 481
30.7.3 Voltage Regulation 481
30.7.4 Voltage Ratio & Connections 481
30.7.5 Voltage & Phase Tapping 481
30.7.6 Transformer Cores 482
30.7.7 Performance Under External Short Circuit 483
30.7.8 Losses 483

30.7.9 HV Cable Terminations 483
30.7.10 Diodes 483
30.7.11 Surge Protection 483
30.7.12 Temperature Rise 484
30.7.13 Protective Services 484
30.7.14 Instrumentation 484
30.7.15 Negative Isolation 485
30.8 A.C. HV Switchgear 485
30.9 D.C. Traction Supply Switchgear 485
30.9.1 General 485
30.9.2 Busbars 486
30.9.3 System Voltage and Fault Level 487
30.9.4 Temperature Rise 487
30.9.5 Circuit Breaker Isolation 487
30.9.6 Circuit Breakers 489
30.9.7 Interlocks 490
30.9.8 Protection Devices 490
30.9.9 Control and Instrumentation 491
30.9.10 Overhead Line Emergency Trip 492
30.9.11 Circuit and Busbar Earthing 493
30.9.12 Isolator Motorised Operation 493
30.9.13 Bypass Isolator Over-current Feature 494
30.10 Batteries and Chargers 494
30.10.1 Scope and System Voltage 494
30.10.2 Batteries 495
30.10.3 Battery Duties 495
30.10.4 Battery Accommodation 495
30.10.5 Battery Chargers 495
30.10.6 Alarm Devices 496
30.10.7 Instrumentation 496
30.10.8 Battery Distribution Board 496
30.11 Earthing, Bonding, Surge Protection & Ancillary Equipment 497
30.11.1 Earthing Systems 497
30.11.2 Traction Negative Busbar System 498
30.11.3 Surge Diverters 498
30.11.4 Substation Ancillary Equipment 499
30.12 Cables & Accessories 499
30.12.1 General 499
30.12.2 Types of Cables 500

30.12.3 11kV A.C. Cable 500
30.12.4 Traction Supply Cables 500
30.12.5 Low Voltage Supply and Multicore Control Cables 501
31 Overhead Line Equipment 503
31.1 Scope 503
31.2 General Requirements 503
31.3 Equipment Overview 503
31.4 Electrical Power Characteristics 503
31.5 Environmental Considerations 504
31.5.1 Ice Loading 504
31.5.2 Pollution 504
31.6 Material for Equipment 504
31.7 Pole and Cantilever Tube Deflection Criteria 504
31.8 Mechanical and Electrical Clearances 505
31.9 Contact Wire Gradient and Geometry 505
31.9.1 Contact Wire Height 505
31.10 Structural Integrity 505
31.11 Electromagnetic Compatibility 506
31.12 Dynamic Performance 506
31.13 Design Life 506
31.14 Auto-Tensioned Equipment Types 506
31.14.1 Form of Equipment 506
31.14.2 Conductors and Tensioning Devices 506
31.14.3 Tension Lengths 507
31.14.4 Span Length 507
31.14.5 Parallel Feeders 507
31.15 Fixed Termination Equipment Types 507
31.15.1 Form of Equipment 507
31.15.2 Reduced Conductor Tension System 508
31.16 Depot Equipment Type 508
31.16.1 Equipment Support and Registration 508
31.17 Overhead Line Equipment Poles and Equipment Enhancement 509
31.17.1 Combined OLE / Lighting Poles 509
31.17.2 Anchor Bolts, Foundations and Ties 510
31.17.3 Foundations 510
31.17.4 Fixing to Masonry and Concrete Structures 510
31.18 Safe Working On The System 510
31.19 Switching and Sectioning Requirements 511
31.19.1 Sectioning 511

31.19.2 Isolation Facilities 511
31.20 Isolator Enclosures 511
31.20.1 Paint Finish 512
31.20.2 Labelling 512
31.20.3 Isolators 512
31.21 Power Feeder, Reinforcing and Bonding Cables 513
31.21.1 Feeder Cables 513
31.21.2 Track to Traction Substation (TSS) Negative Return Cables 515
31.21.3 Rail to Rail and Track to Track Traction Cross Bonds 515
31.21.4 Running Rail Continuity Cables 515
31.21.5 General Requirements for Cables 516
31.21.6 Cable Ducts 516
31.21.7 Installation of Cables 517
31.21.8 Surge Diverters 517
31.21.9 Bonding 517
32 Stray Current 518
33 Low Voltage Architecture 519
34 Earthing and Bonding 521
35 Supervisory Control and Communications Systems 522
35.1 Scope 522
35.2 Specific Technical Requirements 522
35.3 Tram Position and Detection System 523
35.3.1 Overview 523
35.3.2 Technical Requirements 525
35.3.3 Tram-Borne Equipment 527
35.4 Passenger Information Display System (PIDS) 527
35.4.1 Overview 527
35.5 Telephone Network 530
35.5.1 Overview 530
35.5.2 Technical Requirements 531
35.6 Public Address System 532
35.6.1 Overview 532
35.6.2 Technical Requirements 533
35.7 Operational Radio System (ORS) 534
35.7.1 Overview 534
35.7.2 General Requirements 535
35.7.3 Short Codes 536
35.7.4 Physical Considerations 537
35.7.5 Radio Maintainers' Workstation 538

35.7.6 Road Vehicle Mobile Radio Equipment 538
35.7.7 Hand-Held Mobile Radio Equipment 539
35.7.8 Tram borne Radio Equipment 540
35.7.9 Tram-Borne Interfaces 541
35.8 Passenger Help / Passenger Emergency Help Points 541
35.8.1 Overview 541
35.8.2 Technical Requirements 542
35.9 Closed Circuit Television 542
35.9.1 Overview 542
35.9.2 Technical Requirements 543
35.10 Supervisory Control and Data Acquisition 545
35.10.1 Overview 545
35.10.2 General Requirements 546
35.10.3 Traction Power SCADA 547
35.10.4 Tramstop SCADA 549
35.10.5 Trackside SCADA 550
35.10.6 Fare Collection SCADA 551
35.11 Operational Data Network 551
35.11.1 Overview 551
35.11.2 Location of Nodes 554
35.11.3 General Requirements 556
35.12 Considerations applying to all Communications Subsystems 557
35.12.1 Electrical Connections 557
35.12.2 Cabinets 557
35.12.3 Alarming of Faults 558
35.13 Control Centre 558
35.13.1 Control Centre - Overview 558
35.13.2 Workstation Capabilities 560
35.13.3 Control Centre Philosophy 570
35.13.4 Emergency Telephone Lines 572
35.13.5 Local Area Network 573
35.13.6 Control Centre Time Display 574
35.13.7 Safety Requirements 574
35.13.8 Electrical Requirements 574
35.13.9 Logging 575
35.13.10 Central Data Recording 576
35.13.11 Printers 577
35.13.12 Control Centre Furniture 577
35.13.13 Spare Capacity / System Expansion 578

35.14 Equipment Room 578
35.14.1 Overview 578
35.14.2 Maintainer's Positions 579
35.14.3 Security and Access Control 579
35.14.4 Layout 580
35.14.5 Equipment Housings and Mounting 580
35.14.6 Diagnostic, Maintenance or Offline Mode Indications 580
35.14.7 Equipment Power Supplies 580
35.14.8 Storage 581
35.14.9 Spare Capacity / System Expansion 581
35.14.10 Master Clock and System Clocks 582
35.14.11 Performance Monitoring System 582
35.14.12 Monitor Matrix Display Driver 583
35.14.13 Central Data Recording 583
35.14.14 Voice Recording 584
35.14.15 Equipment Room Maintainer Desks 586
35.14.16 Equipment Room Local Area Network Requirements 587
35.14.17 Other Systems 587
36 Integrated Fare Collection 588
36.1 Scope 588
36.2 Procurement 588
36.3 General Technical Specification 588
36.4 Integrated Fare Collection 588
36.5 Ticket Vending Machines and Validators 589
36.5.1 General 589
36.5.2 Docking Stations for Hand-Held Ticket Machines 589
36.5.3 Equipment Interfaces 590
37 System Integration 591
37.1 Introduction 591
37.2 Definitions 591
37.3 Principle 592
37.4 Inter-contract Integration, Integration of third party and free issue equipment 592
37.5 Formal Roles to be undertaken by the Infraco 592
37.5.1 System Design Authority 592
37.5.2 System Integrator 593
38 Location Specific Requirements 595
39 Project Programme 597
39.1 Introduction 597
39.2 Key Dates 597

39.3 Basis for Programme 599
39.4 Third Party Agreements 600
39.5 P3e Activity Code Dictionary (Mandatory Codes) 601
40 Maintenance 606
40.1 Scope 606
40.1.1 General 606
40.1.2 Overall Objectives 607
40.2 Infrastructure Maintenance Requirements 609
40.2.1 Purpose 609
40.2.2 Scope 609
40.2.3 Maintenance Approach 631
40.2.4 Maintenance Strategy 632
40.2.5 Organisation, Training and Competency 639
40.2.6 Quality, Health, Safety and Environmental 640
40.2.7 Liaison with tie and Other Parties on Maintenance Related Issues 643
40.2.8 Reporting 644
40.2.9 Infrastructure Maintenance Plan - Overview 646
40.2.10 Development of the Plan 646
40.2.11 Tools 647
40.2.12 Availability and Warranty 647
40.2.13 Asset Management System 648
40.2.14 Work Instructions 648
40.2.15 Minimum Spare Parts Holdings 649
40.2.16 Maintenance Records 649
40.2.17 Indicative Scope 650
40.2.18 Cleaning Maintenance Plan 651
40.2.19 Track and Infrastructure Cleaning 652
40.2.20 Depot Building and Yard, Offices and Car Park 652
40.2.21 Cleaning Records 653
40.3 Tram Maintenance Strategy 653
40.3.1 Purpose 653
40.3.2 Scope 653
40.3.3 Organisation, Training, and Competency 657
40.3.4 Quality, Health, Safety, & Environment 657
40.3.5 Liaison with Promoter & Other Parties on Maintenance Related Issues 658
40.3.6 Tram Servicing and Maintenance Plan 659
40.3.7 Maintenance Plan Overview 659
40.3.8 Maintenance Strategy 659
40.3.9 Availability and Warranty 662

40.3.10 Technical Management 663
40.3.11 Work Instructions 663
40.3.12 Minimum Spare Parts Holdings 664
40.3.13 Cleaning Maintenance Plan 665
40.4 Maintainability, Maintenance and Spares 665
40.4.1 General 665
40.4.2 Structures and Civil Engineering 667
40.4.3 Track 667
40.4.4 Training 667
40.4.5 Infrastructure and Trams 668
40.4.6 Maintenance Training 670
40.4.7 Operational Training 671
40.5 Information Procedures, Records and Manuals 671
40.5.1 General 671
40.5.2 Information 672
40.5.3 Operation and Maintenance Manuals Information 672
40.5.4 Asset Register 676
40.5.5 Provisional List of Operating Procedures and Standards 677

1 Introduction

1.1 Summary of Overall Scope

The Infraco shall be fully responsible for the works and services described in these Employer's Requirements and in the Agreement:

1.2 Infraco Works

Summary Scope of Infraco Works

Detailed requirements associated with the infrastructure and equipment for the Infraco Works are described within other Sections of these Employer's Requirements and the Agreement.

The scope defined within this section is limited to a summary of the principal elements of the Infraco Works:

- the supply of Trams in accordance with the Tram Supply Agreement;
- the provision of maintenance as defined in the Tram Maintenance Agreement and Section 40 (Maintenance) of these Employers Requirements;
- the provision of Trackwork - A total of approximately 18.8km and 5.5km (for phases 1a and 1b, respectively) of track kilometres, on street and off street trackform;
- the provision of Tramstops - A total of 22 Tramstops and 1 staff only Tramstop for Phase 1a, and 9 Tramstops for Phase 1b, together with associated infrastructure;
- the provision of Tramstop furniture, systems and equipment;
- the provision of interchange facilities as provided in the design information;
- the provision of points and crossings including point machines, their power supplies, point heating and the control thereof, detection and indication;
- the provision of traffic / tram signals;
- the provision of Tram detection system;
- the provision of all 11kv, 400volt and 230 volt power supplies;
- the provision of traction substations and d.c. traction distribution;
- the provision of OLE (Including all trackside isolators);

- the provision of supervisory control, and communication systems and sub-systems including all field, Tram (free issue for installation by Tram Supplier) network and central control and interface equipment;
- Develop and manage an EMC strategy that includes appropriate immunisation of all Third Party neighbouring systems including Network Rail.
- Accept delivery of fixed and portable Ticket Vending Machines from **tie** and then undertake the installation of such machines and the provision of the necessary supporting infrastructure (including power supplies, communication links and foundations). The maintenance of these machines is not within the scope of the Infraco;
- Provision of the Depot containing:
  - A depot building containing a maintenance workshop and associated workshops, offices, stores and equipment;
  - The Control Centre (First Floor) and associated equipment room (Ground Floor);
  - The Edinburgh Tram Network administration offices;
  - A depot yard and stabling area;
  - A traction power substation;
  - A building services transformer and associated works;
  - All necessary services and utility connections;
  - A boiler house;
  - Hard-standing for a diesel alternator; and
  - The Depot access road.
- Provision of Tram associated road works;
- Provision of traffic management;

- Provision of road furnishings;
- Provision of bridges, structures and retaining walls, including the necessary services and facilities e.g. lighting, drainage, fencing and guardrails, earthing and bonding etc.;
- Civil works including earthworks (inclusive of contamination removal, demolition, Site clearance, excavation, bridges and structures, all necessary temporary works and drainage;
- Demolition/modification of certain buildings as identified in the design phase.
- Relocating the War Memorial at Haymarket Junction (the Infraco shall be required to obtain confirmation from **tie** prior to such re-location that **tie** is satisfied that all relevant Consents have been obtained by the Infraco;
- Landscaping including, hard landscaping, soft landscaping, boundary treatments;
- Provision of lighting;
- Provision of signage;
- Provision of fencing;
- The provision of all temporary works and installations (to allow construction of the Edinburgh Tram Network and achievement of delivery of the Edinburgh Tram Network into service) including the provision of connections to appropriate power supplies.
- to carry out and/or manage to completion the design of the Edinburgh Tram Network, including the management coordination, and specification and implementation of the necessary works for the modification of the Urban Traffic Control System;
- to procure and install all materials and equipment, required for the complete operating Edinburgh Tram Network, as summarised and as further detailed within these Employer's Requirements;
- to supply documentation as defined within these Employer's Requirements, including design documentation, as-built documentation, statutory information, as-built information, maintenance documentation and training documentation;
- to energise the Edinburgh Tram Network including liaison with and management of all interested and affected parties;

- to provide access and support for driver training;
- to provide comprehensive management and technical and maintenance services and Deliverables to ensure that all of the above is delivered in full compliance with these Employer's Requirements.

1.3 Phase 1a Scope Statement Regarding Inclusion for the Phase 1b Option

Phase 1a shall meet these Employer's Requirements and provide full functionality as a standalone tram network. The scope for Phase 1a shall include the following elements in order to facilitate the addition of Phase 1b as an option instructed later under this Agreement.

1. The structure, earthworks and necessary works at Roseburn Junction shall include all sub-structure, structures, earthworks, ductwork, drainage and fitting out to bottom of rail fixing, including the provision for the OLE spur connection for Phase 1b from Phase 1a and OLE supports, for the delta connection of Phase 1b with Phase 1a. The structure, earthworks and works shall extend as a minimum such that the subsequent construction of Phase 2b does not interfere with the operation of Phase 2a except to the extent allowed by the possessions detailed below.

2. Plain line shall be installed along the Phase 1a route through the Roseburn Junction, however the Infraco shall ensure that the design and construction shall provide for the turnouts to be installed in a maximum of one 54 hour possession of the Phase 1a inbound and outbound tracks between Murrayfield and the Western end of Haymarket Yards turnback. Traction power supply sectioning shall allow the turnback of service trams throughout the possession. In addition, up to 28 normal night-time possessions shall be available for preparatory works and commissioning works.

3. The central supervisory, control and communications systems provided by the Infraco for Phase 1a shall have sufficient capacity and functionality to accommodate the incorporation of Phase 1b. This shall include all software, firmware, databases with the same control and indication functionality as for Phase 1a. All central control system hardware shall be provided to allow the connection of the Phase 1b infrastructure by means of cable connection alone.

4. The central supervisory, control and communications systems shall be designed and configured such that the commissioning of Phase 1b infrastructure shall be possible without material impact on the passenger services operating on Phase 1a or the operational Control Centre prior to assimilation of Phase 1b with Phase 1a.

5. Documentation, drawings, manuals, spare parts and training shall be provided for Phase 1a on a standalone basis, but shall be in the form that is expandable to accommodate Phase 1b as and when constructed..

2 Operations and Performance

2.1 Scope

The scope of this Section of the Employer's Requirements defines the Operations & Performance requirements applicable to the Edinburgh Tram Network (ETN) which the Infraco must comply with.

2.2 Network Description and Principles

The Edinburgh Tram Network will operate as a 'line-of-sight' tramway, with tramway signalling provided at road junctions and at tramway junctions where appropriate. A fleet of Trams will serve the ETN providing level boarding with low level platforms located along the routes.

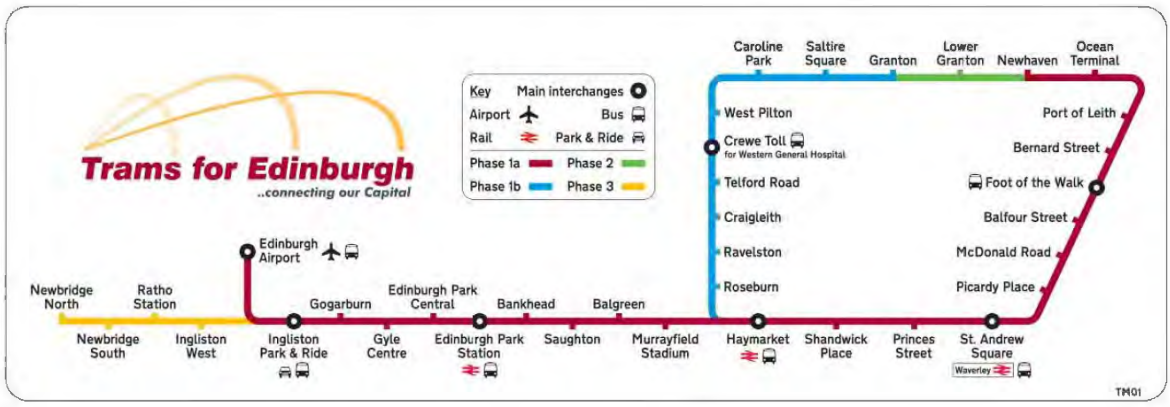

Figure 1

For ease of reference, a diagram of the Edinburgh Tramway Network is shown in Figure 1 above.

The route in the city from Newhaven to Haymarket (approximately half of Phase 1a) and from West Granton Access to Granton Square (approximately a third of Phase 1b) runs mainly on-street with varying degrees of segregation. The Roseburn corridor (approximately two thirds of Phase 1b) is a segregated off-street alignment, shared with a combined footpath and cycleway. Most of the route between Haymarket and the Airport (the remaining half of Phase 1a) is segregated from road traffic.

The whole ETN will consist of double track.

The Depot, located at Gogar, will provide maintenance and stabling facilities for the entire fleet of Trams operating on the ETN. It will also contain the administration and management offices, including an operations and Control Centre, from where the ETN will be managed and maintained.

Transport Services shall be operated in accordance to a timetable, as agreed between the Operator and **tie**, to achieve reliable and consistent operation at the required tram frequencies.

Throughout these Employer's Requirements reference is made to three timetables that shall be progressively introduced in response to patronage demand growth. These are intended to allow for reliability growth and Operator familiarisation with the Edinburgh Tram Network. The following definitions shall apply:

- **Operational Timetable**

  A timetable developed by **tie**, which provides Trams at a frequency of twelve Trams per hour in each direction on the common section between Haymarket and Ocean Terminal. Six Trams per hour in each direction are operated on the sections between Haymarket and the Airport and between Ocean Terminal and Newhaven. For Phase 1b, Trams at a frequency of six trams per hour in each direction on the section between Haymarket and Granton square shall be operated. The Operational Timetable shall be in effect from the Service Commencement Date for a minimum of one year.

- **AM and PM Peak Enhanced Timetable**:

  A timetable developed by **tie**, which provides Trams during the AM and PM peaks at a frequency of sixteen Trams per hour in each direction on the common section between Haymarket and Ocean Terminal. For Phase 1b providing Trams at a frequency of eight trams per hour in each direction on the section between Haymarket and Granton square for the AM and PM peak times only, reverting to the Operational Timetable during the inter peak period. The AM and PM Peak Enhanced Timetable shall be introduced no earlier than one year after the Service Commencement Date and shall be operated for a minimum of six months.

- **Enhanced Timetable:**

  A timetable developed by **tie**, which provides Trams at a frequency of sixteen Trams per hour in each direction on the common section between Haymarket and Ocean Terminal. For Phase 1b providing Trams at a frequency of eight Trams per hour in each direction on the section between Haymarket and Granton square. The Enhanced Timetable shall be introduced no earlier than two years after the Service Commencement Date.

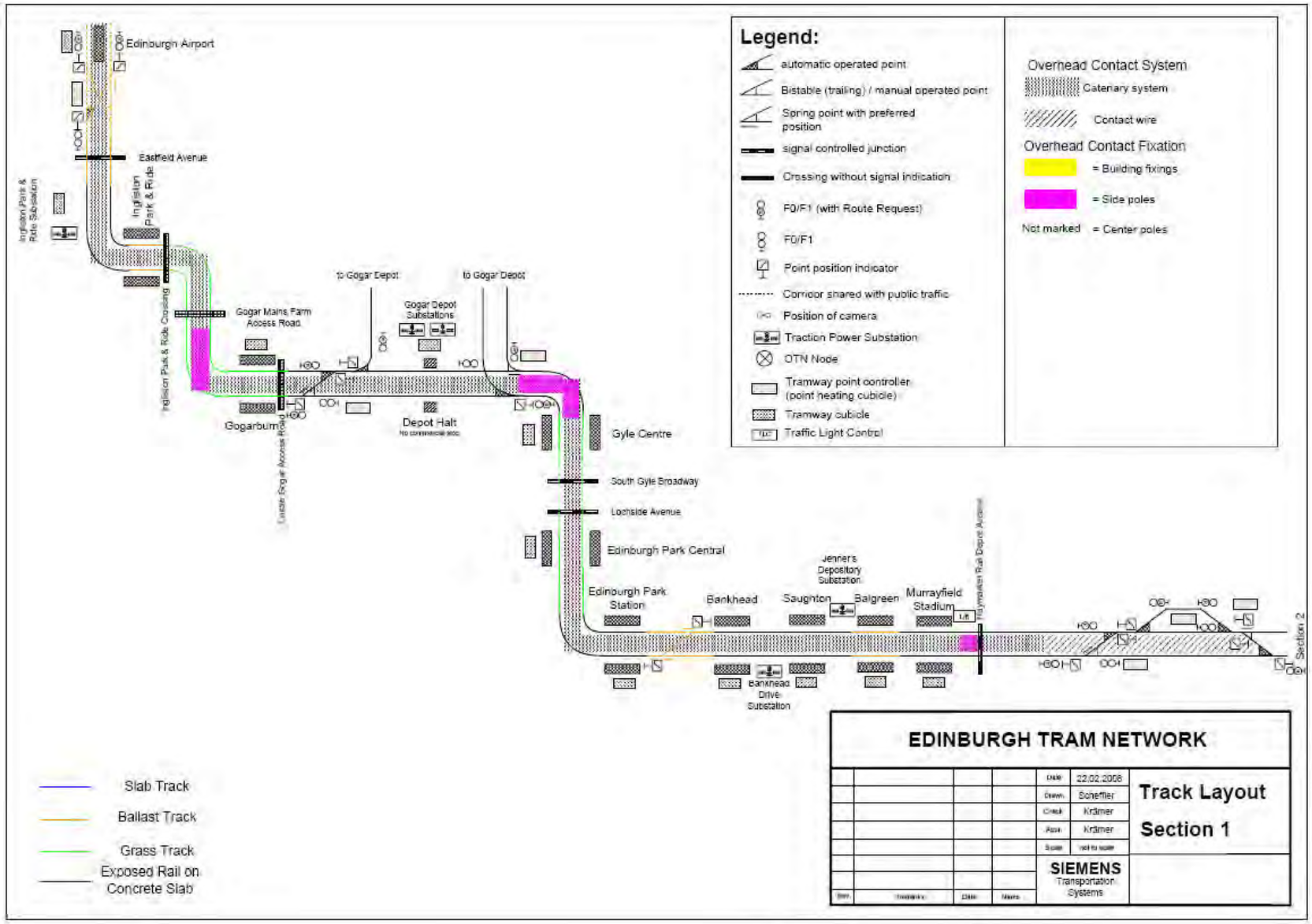

Figure 2 – Edinburgh Tram Phases 1a and 1b Network Diagram

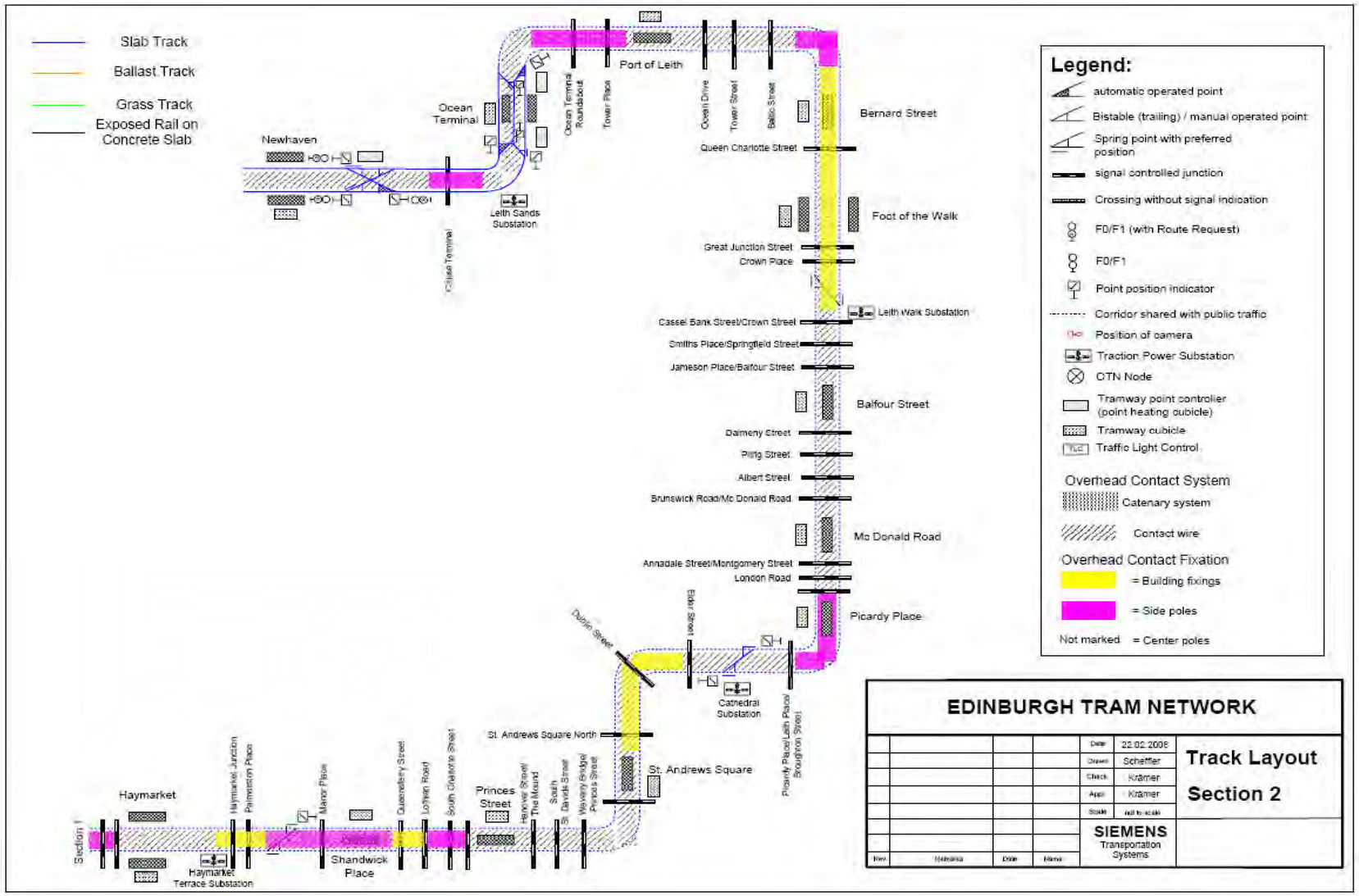

Figure 3 – Edinburgh Tram Phases 1a and 1b Network Diagram

2.3 Specific Operations and Performance Requirements

2.4 Tramstop Location and Types

The Tramstop location and types are detailed in the following table. The acronyms given are provisional.

ID	Tramstop	Platform Style
	PHASE 1a	
AIR	Edinburgh Airport	1 Centre
IPR	Ingliston Park and Ride	2 Side
GBN	Gogarburn	2 Side
DEH	Depot Halt (Staff Only)	2 Side
GYL	Gyle Centre	2 Side
EDP	Edinburgh Park Central	2 Side
EPS	Edinburgh Park Station	2 Side
BNK	Bankhead	2 Side
SGT	Saughton	2 Side
BAL	Balgreen	2 Side
MUS	Murrayfield Stadium	2 Side
HAY	Haymarket	2 Side
SHP	Shandwick Place	1 Centre
PST	Princes Street	1 Centre
SAS	St Andrew Square	1 Centre
PPL	Picardy Place	1 centre
MDR	McDonald Road	1 Centre
BFS	Balfour Street	1 Centre
FOW	Foot of the Walk	2 Side
BER	Bernard Street	1 Centre
POL	Port of Leith	1 Centre
OCT	Ocean Terminal	1 Centre, 1 Side
NEW	Newhaven	2 Side

	PHASE 1b	
GRT	Granton	1 Centre
SSQ	Saltire Square	2 Side
CPK	Caroline Park	2 Side
WPN	West Pilton	2 Side
CTL	Crewe Toll (for Western General)	2 Side
TEL	Telford Road	2 Side
CRA	Craigleith	2 Side
RAV	Ravelston	2 Side
ROS	Roseburn	2 Side

Table 1 – Edinburgh Tram Phases 1a and 1b Network Tramstop Location and Details

2.5 Expansion (including Line 3)

The Infraco shall ensure that the ETN shall be designed to permit expansion to include the following elements:

- Phased implementation of the ETN and associated fleet increases (including the implementation of the Phase 1b Option);
- Addition of Phase 2 of the ETN (as shown in Figure 1), including provision of Lower Granton Road stop, to close the loop along the sea front between Newhaven and Granton Square using the powers in the Edinburgh Tram (Line One) Act 2006;
- Addition of Phase 3 of the ETN (as shown in Figure 1), including associated stops at Ingliston West, Ratho Bridge and Newbridge South, from Ingliston Park and Ride to Newbridge using the powers in the Edinburgh Tram (Line Two) Act 2006;
- Addition of Line Three (From the junction of Princes Street/South St. Andrew Street to Royal Infirmary);

Extensions to the ETN set out above are not currently covered by these Employer's Requirements. However, the ETN must be designed in such a way as not to impede this future expansion.

For the avoidance of doubt, the following are covered by these Employer's Requirements.

- Future frequency increases beyond the enhanced service frequency of 8 & 8 tph;
- Increased operating hours beyond the scheduled last Tram of 23:59 and before the scheduled first Tram at 06:00;
- Associated impacts of increased staff numbers from 361 initially anticipated up to a maximum of 403 e.g. accommodation at the Depot.

2.6 Depot Locations

The Edinburgh Tram Network Depot is located at Gogar and shall be capable of providing capacity for the stabling of 27 trams of 44m in length, clear of fouling points in the stabling area.

The Depot shall be capable of future expansion to provide the capacity required for the identified future service frequencies and/or the requirements for Line Three, such that the Depot can be extended to stable 36 Trams of 44m in length, clear of fouling points in the stabling area.

2.7 Service Patterns, Operating Hours and Frequencies

The ETN shall support a daily service, all year round. The proposed initial service patterns, operating hours and frequencies are as follows:

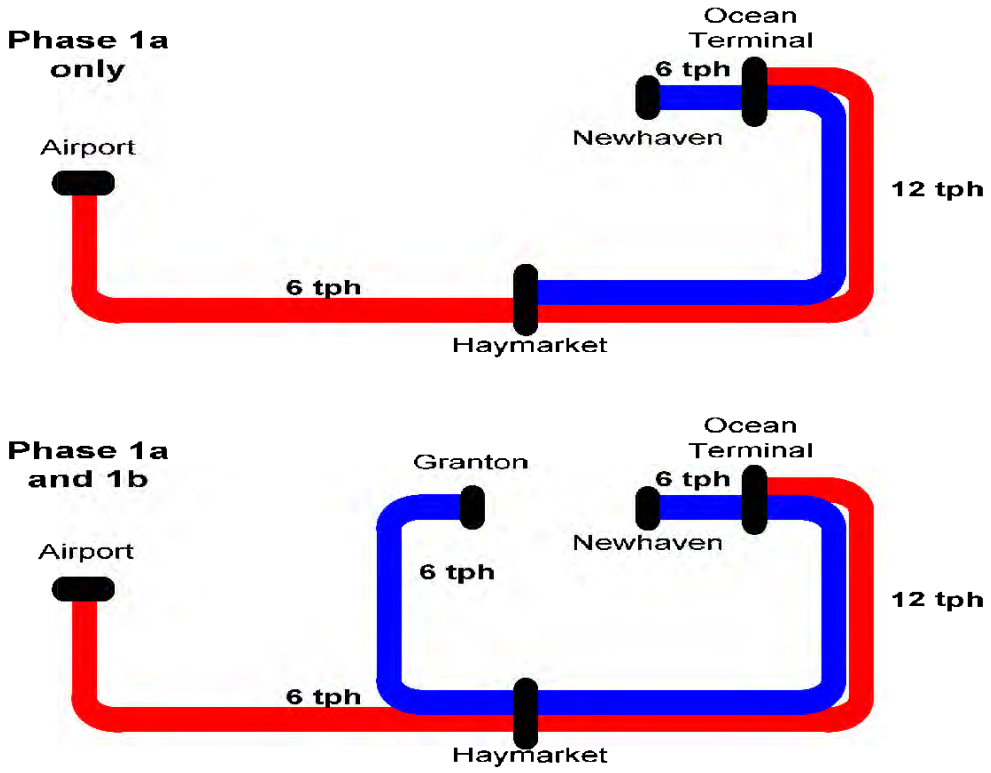

Figure 4 - Service Patterns for the Operational Timetable 6 & 6 Tram per hour scenario

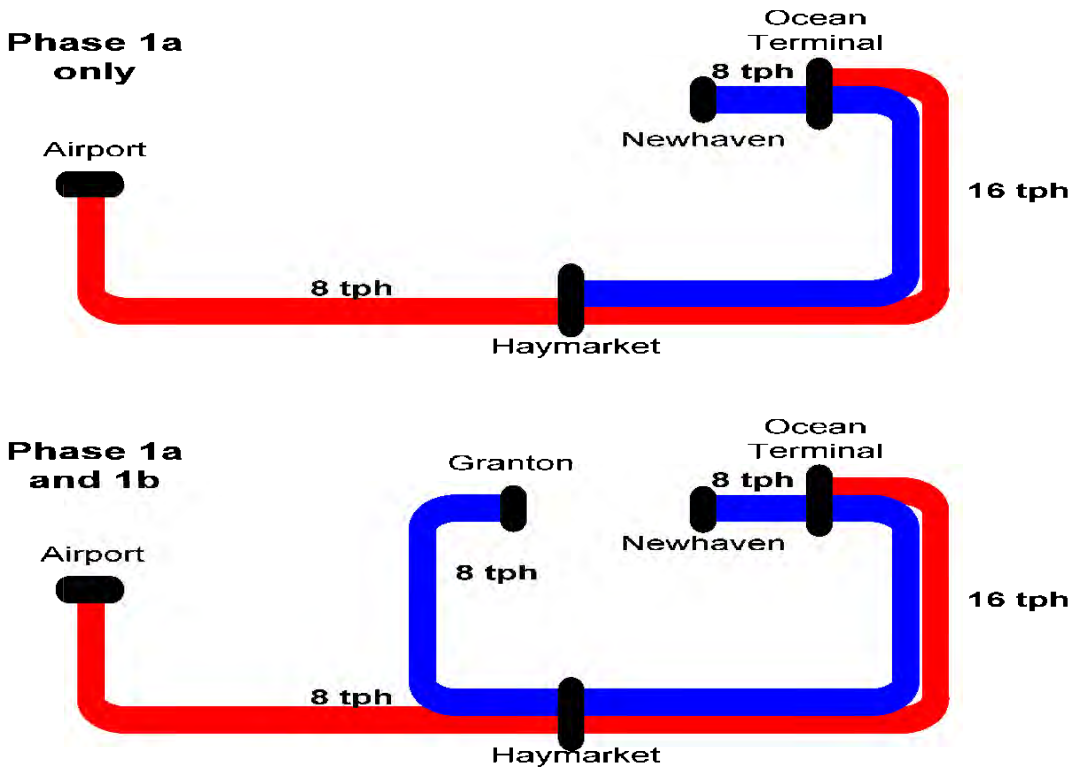

Figure 5 - Peak Service Patterns for the Enhanced AM & PM Peaks Timetable and the Enhanced Timetable 8 & 8 Tram per hour scenario

2.8 Operating Hours and Frequencies

The first and last Tram services and frequencies for 6 & 6 Tram per hour scenario are shown in Figure 4 - service patterns for the Operational Timetable 6 & 6 Tram per hour scenario and for 8 & 8 Tram per hour scenario in Figure 5.

These scenarios are based upon the following assumptions and conditions:

- The two balanced services combine to give a total of 12 or 16 Trams per hour per direction on the common section between Ocean Terminal and Haymarket are required during the daytime to replace withdrawn bus services (and therefore demand and capacity) on Leith Walk;
- For the purposes of ramping up/down service Short workings between Edinburgh Airport (Phase 1a) / Granton Square (Phase 1a & Phase 1b) or Haymarket (Phase 1a only) and St. Andrew Square are based on terminating Trams at St. Andrew Square. The location of the turnback is at York Place;
- Edinburgh Airport service Tram frequency is ramped up/down from Ocean Terminal. Granton Square (Phase 1a & Phase 1b) or Haymarket (Phase 1a only) service Tram frequency is ramped up/down from Newhaven;
- Trams going into service between Gogar Depot and Ocean Terminal/Newhaven will run "in service" from the Gyle (first tram Gyle to Ocean Terminal approx. 05:15 Monday to Saturday inclusive);
- Haymarket (Phase 1a only) or Granton Square (Phase 1a & Phase 1b) service Trams going out of service running between Newhaven and Gogar Depot will run "in service" as far as the Gyle;
- St. Andrew Square curtailed Trams going out of service running between St. Andrew Square and Gogar Depot will run "in service" as far as the Gyle;
- Edinburgh Airport service Trams going out of service will run "in service" from Ocean Terminal to Edinburgh Airport with a short "dead run" from Edinburgh Airport to Gogar Depot;

- The period of time between the last Tram returning to the depot at night and the first Tram leaving the Depot in the morning Monday to Saturday inclusive is anticipated to be 4hrs 30 min, although this may be subject to amendment. Work requiring possessions will have to be agreed with the Operator. Subject to agreed possessions, work may be allowed on the Edinburgh Tram Network infrastructure for 3 hours and 45 minutes, depending on location, each night and allowing time for the implementation and withdrawal of isolations and/or possessions; and

- The provision of Transport Services is based on the requirement to always have a Tram present at the Airport Tramstop.

Table 2 – First and Last Tram Times for the 6 & 6 Tram per Hour Operational Timetable

1b	Airport to Ocean Terminal	0	6	[redacted]		6[a]	0
1b	Ocean Terminal to Airport	6	6	[redacted]		6	0
1b	Granton to Newhaven	0	6	[redacted]		6[b]	0
1b	Newhaven to Granton	6	6	[redacted]		6[c]	0

Note: The numbers in individual cells give the service frequency starting from the time at the top of the relevant column.

Network / Phasing	**Service frequency commencing at:**	**Sunday (trams per hour)**					
		first tram **07:00**	**07:45**	**08:00**	**08:20**	**23:15**	last tram **23:59**
1a	Airport to Ocean Terminal	0	6	6	6	6[a]	0
1a	Ocean Terminal to Airport	6	6	6	6	6	0
1a	Haymarket to Newhaven	0	0	6	6	0	0
1a	Newhaven to Haymarket	0	0	0	6	0	0
1b	Airport to Ocean Terminal	0	6	[redacted]		6[a]	0
1b	Ocean Terminal to Airport	6	6	[redacted]		6	0
1b	Granton to Newhaven	0	6	[redacted]		6[b]	0
1b	Newhaven to Granton	6	6	[redacted]		6[c]	0

Notes:

[a] from approx 2 23:15 Trams run from the Airport - City Centre only

[b] from approx 2 23:15 Trams run from Granton - City Centre only

[c] from approx 2 23:15 Trams run from Newhaven - Haymarket continuing in service on TL2 to Gyle

First and last Tram services and frequencies for 6 & 6 tram per hour Operational Timetable

Table 3 - First and Last Tram Times for the 8 & 8 Tram per Hour Enhanced AM & PM Peak Scenario

	Networking (Phasing) andService Frequency commencing at:	06:00	06:45	07:00	07:20	07:45	09:45	15:45	19:00	19:45
1 a	Airport to Ocean Terminal	0	6	8	8	8	6	6	8	6
1 a	Ocean Terminal to Airport	6	6	8	8	8	6	6	8	6
1 a	Haymarket to Newhaven	0		6	8	8	6	6	8	6
1 a	Newhaven to Haymarket	0		0	6	8	6	6	8d	6
1 b	Airport to Ocean Terminal	0	6	8		8	6	6	8	6
1 b	Ocean Terminal to Airport	6	6	8		8	6	6	8	6
1 b	Granton to Haymarket	0	6	8		8	6	6	8	6
1 b	Haymarket to Granton	6	6	8		8	6	6	8	6

Table 4 - First and Last Tram Times for the 8 & 8 Tram per Hour Enhanced AM & PM Peak Scenario

Phase	Service Frequency commencing at:	Saturday (trams per hour)				
		First tram 06:00	06:45	07:30	07:50	23:15
1a	Airport to Ocean Terminal	0	6	6	6	6a
1a	Ocean Terminal to Airport	6	6	6	6	6
1a	Haymarket to Newhaven	0	0	6	6	0
1a	Newhaven to Haymarket	0	0	0	6	0
1b	Airport to Ocean Terminal	0	6	6	6	6a
1b	Ocean Terminal to Airport	6	6	6	6	6
1b	Granton to Newhaven	0	6	6	6	6b
1b	Newhaven to Granton	6	6	6	6	6c

Table 5 - First and Last Tram Times for the Enhanced AM & PM Peak Timetable

Networking (Phasing) and Service Frequency commencing at:		Sunday (trams per hour)									
		first tram 07:00	07:45	07:50	08:00	08:45	18:00	18:20	18:45	23:15	last tram 23:59
1a	Airport to Ocean Terminal	0	6	6	6		6	6		6a	0
1a	Ocean Terminal to Airport	6	6	6	6		6	6		6	0
1a	Haymarket to Newhaven	0		6	6		6	6			0
1a	Newhaven to Haymarket	0		0	6		6	6d			0
1b	Airport to Ocean Terminal	0	6		6	6	6		6	6a	0
1b	Ocean Terminal to Airport	6	6		6	6	6		6	6	0
1b	Granton to Haymarket	0	6		6	6	6		6	6b	0
1b	Haymarket to Granton	6	6		6	6	6		6	6c	0

Notes:

a) from approx. 23:15 Trams run from Airport – St Andrew Sq. only.
b) from approx. 23:15 Trams run from Granton – St Andrew Sq. only.
c) from approx. 23:15 Granton Trams run from Newhaven – Haymarket continuing in service on to Gyle.
d) from approx. 19:20 (18:%0 Saturday and 18:20 Sundays) Haymarket Trams running from Newhaven – Haymarket continue in service to Gyle.

The numbers in individual cells give the service frequency starting from the time at the top of the relevant column.

Table 6 - First and Last Tram Times for the 8 & 8 Tram per Hour Enhanced Timetable

Note: The numbers in individual cells give the service frequency starting from the time at the top of the relevant column.

Network (phasing) and service frequency commencing at:		Monday - Friday (trams per hour)									
		06:00	06:45	07:00	07:20	07:45	19:00	19:20	19:45	23:15	last tram 23:59
1a	Airport to Ocean Terminal	0	8	8	8		8	8		8[a]	0
1a	Ocean Terminal to Airport	8	8	8	8		8	8		8	0
1a	Haymarket to Newhaven	0		8	8		8	8			0
1a	Newhaven to Haymarket	0		0	8		8	8[d]			0
1b	Airport to Ocean Terminal	0	8	8		8	8		8	8[a]	0
1b	Ocean Terminal to Airport	8	8	8		8	8		8	8	0
1b	Granton to Newhaven	0	4	4		8	8		4	4[b]	0
1b	Newhaven to Granton	4	4	8		8	4		4	4[c]	0

Network (phasing) and service frequency commencing at:		Saturday (trams per hour)									
		first tram 06:00	06:45	07:30	07:50	08:15	18:30	18:50	19:15	23:15	last tram 23:59
1a	Airport to Ocean Terminal	0	8	8	8		8	8		8[a]	0
1a	Ocean Terminal to Airport	8	8	8	8		8	8		8	0
1a	Haymarket to Newhaven	0		8	8		8	8			0
1a	Newhaven to Haymarket	0		0	8		8	8[d]			0
1b	Airport to Ocean Terminal	0	8	8		8	8		8	8[a]	0
1b	Ocean Terminal to Airport	8	8	8		8	8		8	8	0
1b	Granton to Newhaven	0	4	4		8	8		4	4[b]	0
1b	Newhaven to Granton	4	4	8		8	4		4	4[c]	0

Network (phasing) and service frequency commencing at:		Sunday (trams per hour)									
		first tram 07:00	07:45	07:50	08:00	08:45	18:00	18:20	18:45	23:15	last tram 23:59
1a	Airport to Ocean Terminal	0	6	6	6		6	6		6[a]	0
1a	Ocean Terminal to Airport	6	6	6	6		6	6		6	0
1a	Haymarket to Newhaven	0		6	6		6	6			0
1a	Newhaven to Haymarket	0		0	6		6	6[d]			0
1b	Airport to Ocean Terminal	0	6		6	6	6		6	6[a]	0
1b	Ocean Terminal to Airport	6	6		6	6	6		6	6	0
1b	Granton to Newhaven	0	6		6	6	6		6	6[b]	0
1b	Newhaven to Granton	6	6		6	6	6		6	6[c]	0

Notes:

[a] from approx 23:15 trams run from Airport - St Andrew Sq only

[b] from approx 23:15 trams run from Granton - St Andrew Sq only

[c] from approx 23:15 Granton trams run from Newhaven - Haymarket continuing in service on to Gyle

[d] from approx 19:20 (18:50 Saturdays and 18:20 Sundays) Haymarket trams running from Newhaven - Haymarket continue in service to Gyle

2.9 Service Frequencies and Expansion

The design of the ETN shall support the Operational Timetable and Enhanced Timetable service frequencies set out in Table 2 – First and Last Tram Times for the 6 & 6 Tram per Hour Operational Timetable, Table 3 - First and Last Tram Times for the 8 & 8 Tram per Hour Enhanced AM & PM Peak Scenario and Table 4 - First and Last Tram Times for the 8 & 8 Tram per Hour Enhanced AM & PM Peak Scenario. In addition to this, the ETN shall operate the same service pattern as set out in Table 4 - First and Last Tram Times for the 8 & 8 Tram per Hour Enhanced AM & PM Peak Scenario above, but with the Trams per hour increased by 50% throughout without upgrade or loss of performance for up to a maximum of 2 hours between Ocean Terminal and Picardy Place, and indefinitely between Picardy Place and the Airport.

The service patterns for the ETN are defined as the Operational Timetable (as shown in Table 2 – First and Last Tram Times for the 6 & 6 Tram per Hour Operational Timetable), the AM and PM Peak Enhanced Timetable (as shown in Table 3 - First and Last Tram Times for the 8 & 8 Tram per Hour Enhanced AM & PM Peak Scenario) and the Enhanced Timetable (as shown in Table 4 - First and Last Tram Times for the 8 & 8 Tram per Hour Enhanced AM & PM Peak Scenario).

A simulation indicating the power consumption of the ETN service patterns as defined above and considering the braking energy regeneratated by the Tram shall be performed during design phase.

2.10 Special Working and Degraded Operation

Special working is required at certain times of the year, as detailed in Table 8 - Reconfiguration of Service due to the Closure of Princes Street to allow for the short workings on the network routes, when sections of the ETN shall be closed to allow for example Hogmanay, the Edinburgh Festival and other special events and festivals.

The design of the ETN shall allow services to be turned back at the locations detailed in Table 7 - Turnback Locations. The precise chainages where turnbacks are to be installed is shown on the alignment drawings.

ID	Location
	PHASE 1a
EPS	Edinburgh Park Station
HAY	Haymarket Yards
SHP	Shandwick Place
PPL	Picardy Place
FOW	Foot of the Walk (Leith Walk)

OCT	Ocean Terminal
	PHASE 1b
CTL	Crewe Toll

Table 7 - Turnback Locations

Note that Trams may also be turned back at Gogar Depot, and the facility to allow this shall be provided by the Infraco.

The individual services will be reconfigured to operate using the turn-back facility nearest to the affected area. An example is the requirement to close Princes Street for Hogmanay. In this situation the services shall be reconfigured as detailed in Table 8 - Reconfiguration of Service due to the Closure of Princes Street.

Service alteration for Closure of Princes Street			
Original Route of Service	**Affected Area**	**Trams / Hour**	**Revision**
Between Airport and Ocean Terminal	Princes St. section closed	6 or 8	Services run between Airport and Shandwick Place. No service runs between Shandwick Place and Picardy Place. Services run between Picardy Place and Newhaven
Between Haymarket and Newhaven (Phase 1a only)	Princes St. section closed	6 or 8	No service runs between Haymarket and Picardy Place[a]. Services run between Picardy Place and Newhaven
Between Granton Square and Newhaven (Phase 1b)	Princes St. section closed	6 or 8	Services run between Granton Square and Shandwick Place. No service runs between Shandwick Place and Picardy Place. Services run between Picardy Place and Newhaven

a – Assumption that no services will run the short leg Haymarket to Shandwick Place when Princes Street is closed.

Table 8 - Reconfiguration of Service due to the Closure of Princes Street

2.11 Journey Time and Runtime

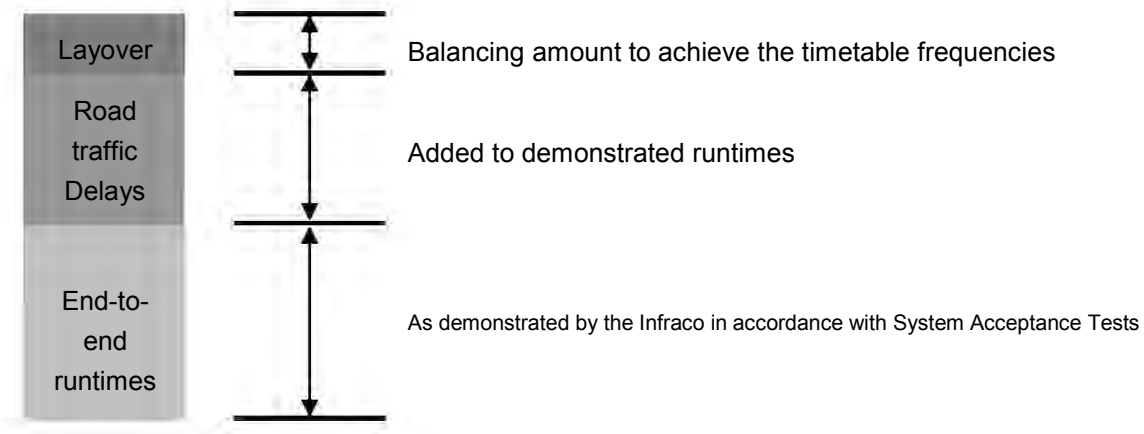

Figure 6 - Maximum Journey Times

The required maximum journey times for the Edinburgh Tram Network, quoted as operational journey time including dwell times of 25 seconds at each Tramstop, as defined during Preliminary design shall be as follows:

Phase 1a		
Airport to Ocean Terminal	in either direction including 25 secs dwells at Tramstops	42mins 18 secs
Phase 1b		
Granton Sq to Newhaven	in either direction including 25 secs dwells at Tramstops	39mins 26 secs

For the avoidance of doubt these are end to end journey times and the Infraco shall demonstrate during System Acceptance Tests defined in Section 23.18 (Testing and Commissioning) of these Employer's Requirements the trip times which can be achieved by the Trams running on the ETN infrastructure as developed and adjusted from the above base line in accordance with Section 2.12. These do not include layover time at the turnback stops as shall be agreed between the Operator and **tie** in order to develop the Operational Timetable.

2.12 Journey Time and Runtime

The Infraco shall continue to develop and refine the runtime model as the design progresses and, at a frequency of no less than every three months or upon **tie**'s request, provide updated reports demonstrating that the maximum run times can be achieved. The Infraco shall also prepare a model of the electricity consumption linked to the run time model and shall use reasonable endeavours to optimise the system design and construction to minimise electricity usage.

Reference should be made to the Runtime Simulation Stage 3 Report (ref: ULE90130-SW-REP-00238-V3) for vehicle performance characteristics and actual driver operations.

The operational and modelling assumptions that shall be used in all modelling of runtime and operational timetables are set out in Table 9 - Operational and Modelling Assumptions.

Item	Value	Notes
Door Performance	12 seconds	Defined as the time for the doors to open and close including DDA requirements and passenger and driver reaction times.
Boarding and Alighting Time	13 seconds	Defined as the time between the doors being fully open and the sounding of the door closing tone.
Dwell Times	25 seconds a constant in modelling and during end to end journey time tests, to be refined for the purposes of the timetables to be Tramstop specific	Average dwell, made up of the door performance time and the boarding and alighting time
Loading	AW2 all seated 4 pass/m2 standing	
Gradient	+/- 8% Max. Note: This value is the maximum allowable gradient for track design.	Gradient data for the complete ETN has been developed in the design phase This identified major gradients at St. Andrew Square and the line alongside Gogar Depot

2.13 Operational Allowances and Rules for Timetabling

An operational allowance will be added to the end to end runtimes demonstrated through testing to meet those quoted in this section to ensure a robust Operational Timetable is constructed.

Requirement	Allowance
Operational Journey time allowance	Newhaven to Haymarket = 1.5 minutes Ocean Terminal to Airport = 1.5 minutes Newhaven to Granton Square = 45 secs (Phase 1b only)
Layover	4 minute minimum or 10% of timetabled runtime, whichever is the greater taken at the terminus for each end to end trip with the exception of the Airport Tramstop where a Tram is required to always be present. Crew change-over locations to be determined as the Operational Timetable is refined.

Table 10 - Operational Runtime Allowances

2.14 Miscellaneous Operational Requirements

2.15 Comfort Break Facilities

Facilities shall be available for driver comfort breaks at the nominated layover locations detailed in Table 11 - Layover Facilities

Location	Comments
Edinburgh Airport	Crew Change Facility[1]
Ocean Terminal	Normal Terminus
Granton Square	Normal Terminus
Haymarket	Crew Change Facility

Table 11 - Layover Facilities

[1] *Damian has already instructed this change.*

At these locations access shall be provided to a suitable toilet with hand washing facilities.

Crew Change Facility

A crew changing facility shall be provided adjacent to the Haymarket Tramstop. This facility shall provide tram crew with access to a toilet with hand washing facilities, a drinking water supply, suitable heating, power, lighting, drainage and connection to the telephone network.

2.16 Performance and Reliability

The design and construction of the ETN shall be demonstrated by RAMS analysis to enable the individual systems availability targets stated in these Employer's Requirements to be met. It shall enable an overall tram punctuality for System technical causes of at least 99% in accordance with the calculation of the Punctuality Service Element contained in Schedule 6 of the Agreement.
As measured on a 28 day basis at the following monitoring points along the route at least 99% of the Trams shall be no earlier than one minute and no greater than two minutes late, caused by technical failure, compared to the scheduled headway.

Monitoring points

a) Phase 1a: for the purposes of monitoring arrival and departure headways between Trams:

- Edinburgh Airport.

b) Phase 1a: for the purposes of measuring departure headways between Trams only:

- Edinburgh Park Station;
- Haymarket;
- Foot of the Walk;
- Leith; and
- Picardy Place.

c) Phase 1b: for the purposes of measuring departure headways between Trams only:

- Crewe Toll (northbound only); and
- Granton Square.

The performance mechanism for Infraco is contained within this Agreement. The design of the ETN shall be such that it allows the ETN to operate safely and effectively in all modes.

Normal Mode being that used to establish the operational timetable. Degraded Mode being restricted operation due to failures or disruption on the tramway or the adjacent highway network.

2.17 Network and Service Pattern

See table 2 – Service Patterns for the Operational Timetable 6 & 6 Tram per hour scenario and table 5 – Peak Service Patterns for the Enhanced AM & PM Peaks Timetable and table 6 – the Enhanced Timetable 8 & 8 Tram per hour scenario] for further information; for daily service patterns; and note that trams are to be co-ordinated between OCT and HAY to give an even headway pattern in both directions.

2.18 Layover s

The Operational Timetable and the Enhanced Timetable developed by the Operator and the Infraco's Proposals shall allow for the following:

- An operational Tram can always be present at the Airport Tramstop;
- Additional layovers to be added to the minimum values to deliver the required headways where appropriate. This additional layover maybe apportioned along the route; and
- The minimum layover requirements are as set out in these Employer's Requirements and these shall be apportioned at the terminus Tramstops only.

Allowance for perturbations that are not road traffic delays:

- These shall be apportioned along the route, as can be seen in Figure 6 - Maximum Journey Times.

2.19 Calculation of Minimum Round Trip Times

In this section, the minimum round trip times for each of the service options are calculated. The calculations add up the elements that are required to establish the round trip times, and the source of each element is stated.

Table 12 - Ocean Terminal – Edinburgh Airport Service (Phase 1a and Phase 1b)

OCT – AIR	
00:42:18	OCT - AIR (includes dwell time)[a]
00:04:52	AM junction delay (OCT - HAY)[b]
00:01:30	additional delay between HAY - AIR[c]
00:00:10	10 seconds on each leg for crossover at terminal Tramstop[d]
00:48:50	Total

AIR – OCT	
00:41:59	AIR - OCT (includes dwell time)[a]
00:06:01	AM junction delay (HAY - OCT)[b]
00:01:30	additional minutes of junction delay between AIR - HAY[c]
00:00:10	10 seconds on each leg for crossover at terminal Tramstop[d]
00:49:40	Total

Layovers	
00:04:55	Minimum layover at OCT end for Airport service[e]
00:10:00	Minimum layover at AIR end for Airport service[f]
00:07:30	Minimum layover at AIR end for Airport service[f]
00:14:55	Total min layover for 6 & 6 tram per hour scenario
00:12:25	Total min layover for 8 & 8 tram per hour scenario
01:53:25	Minimum round trip time for 6 & 6 tram per hour scenario
01:50:55	Minimum round trip time for 8 & 8 tram per hour scenario

Notes:

a Data from 'Edinburgh Tram Network Stage 3 Runtime Simulation Report' (Doc Ref: ULE90130-SW-REP-00238 v2).

b Data from 'Mott Macdonald Report - Traffic Interface Report' (Doc Ref: 0003048//REVC/241103). AM Junction delays between Haymarket and Leith Walk have been used as greater than PM delays.

c of additional junction delay between Haymarket and Edinburgh Airport.

d Estimate of additional time to move through the crossover at the terminus / turnback

e Layover calculated from Table 17 – Number of Trams needed for each service (based on 8 & 8 Trams per hour scenario)

f Based on Headway of 10 or 7.5 minutes, from the requirement for Airport layover in Section 32.

Table 13 - Newhaven – Granton Square Service, (Phase 1b only)

NEW – GRT

00:02:49	NEW – OCT (includes 25s dwell time)[a]
00:36:28	OCT – GRT (includes dwell time)[a]
00:04:52	AM junction delay (NEW - HAY)[b]
00:00:45	additional delay between HAY - GRT[c]
00:00:10	10s on each leg for crossover at terminal Tramstop[d]
00:45:04	Total

GRT – NEW

00:37:00	GRT - OCT (includes dwell time)[a]
00:02:26	OCT - NEW (includes 25s dwell time)[a]
00:06:01	AM junction delay (NEW - HAY)[b]
00:00:45	additional delay between NEW - HAY[c]
00:00:10	10s on each leg for crossover at terminal Tramstop[d]
00:43:56	Total
00:04:15	Minimum layover at NEW end for Granton service[e]
00:04:07	Minimum layover at GRT end for Granton service[e]
00:08:22	Total min layover
01:37:22	Minimum round trip time

Notes:

a Data from 'Edinburgh Tram Network Stage 3 Runtime Simulation Report' (Doc Ref: ULE90130-SW-REP-00238v2).

b Data from 'Mott Macdonald Report - Traffic Interface Report' (Doc Ref: 0003048//REVC/241103)(AM Junction delays between Haymarket and Leith Walk have been used as greater than PM delays)

c Transdev estimate of additional junction delay between Haymarket and Granton Square.

d Transdev estimate of additional time to move through the crossover at the terminus / turnback

e Layover calculated from Table 17 – Number of Trams needed for each service (based on 8 & 8 Trams per hour scenario).

Table 14 - Newhaven – Haymarket Service (Phase 1a only)

NEW - HAY	
00:02:49	NEW - OCT (includes 25 seconds dwell time)[a]
00:18:58	OCT - HAY (includes dwell time)[a]
00:04:52	AM junction delay (NEW - HAY)[b]
00:01:30	Additional delay between NEW - HAY
00:00:10	10 seconds on each leg for crossover at turnback[c]
00:00:54	Additional movement from HAY to turnback[e]
00:29:13	Total

HAY - NEW	
00:19:11	HAY - OCT (includes dwell time)[a]
00:02:51	OCT - NEW (includes 25 seconds dwell time)[a]
00:06:01	AM junction delay (HAY - NEW)[b]
00:01:30	Additional delay between HAY- NEW
	10 seconds on each leg for crossover at terminal
00:00:10	Tramstop[c]
00:00:54	Additional movement from turnback to HAY[e]
00:29:07	Total
00:04:00	Minimum layover at NEW end for Haymarket service[d]
00:04:00	Minimum layover at HAY end for Haymarket service[d]
00:08:00	Total min layover
01:06:20	Minimum round trip time

Notes:

a Data from 'Edinburgh Tram Network Stage 3 Runtime Simulation Report' (Doc Ref: ULE90130-SW-REP-00238v2).

b Data from 'Mott Macdonald Report - Traffic Interface Report' (Doc Ref: 0003048//REVC/241103). AM Junction delays between Haymarket and Leith Walk have been used as greater than PM delays.

c Transdev estimate of additional time to move through the crossover at the terminus / turnback

d Layover calculated from Table 17 – Number of Trams needed for each service (based on 8 & 8 Trams per hour scenario)

e Transdev estimate of runtime between HAY and Haymarket Turnback (20kph over 300m = 5.6m/s over 300m = 54 seconds)

2.20 Summary to Establish Fleet Size

The minimum round trip times determined in Section 2.19 above are used in Tables 15 to 18 to determine the tram Peak Vehicle Requirement (PVR) and fleet size for Phase 1a & Phase 1b:

	OCT - AIR service	NER - HAY service	NER - GRS service
Service used on Phase	1a and 1b	1a only	1b only
Headway (min:sec)	10:00	10:00	10:00
Trams per hour	6	6	6
Minimum round trip time (hr:min:sec)	01:53:25	01:06:20	01:38:52
Actual round trip time needed to provide required headways and minimum layover (hr:min:sec)	02:00:00	01:10:00	01:40:00
Total additional layover to achieve headways (min:sec)	06:35	03:40	01:08
Peak number of trams	12	7	10

Table 15 - Number of Trams needed for each service (based on 6 & 6 Trams per hour scenario)

Network Option	1a	1a and 1b
PVR	19	22
Standby/maintenance/repair/training	3	3
Total tram fleet required	22	25

Table 16 - Number of Trams needed for each Phase (based on 6 & 6 Trams per hour scenario)

	OCT - AIR service	NEW - HAY service	NEW - GRT service
Service used on Phase	1a and 1b	1a only	1b only
Headway (min:sec)	07:30	07:30	07:30
Trams per hour	8	8	8
Minimum round trip time (hr:min:sec)	01:50:55	01:06:20	01:37:22
Actual round trip time needed to provide required headways & minimum layover (hr:min:sec)	01:52:30	01:07:30	01:37:30
Total additional layover to achieve headways (min:sec)	01:35	01:10	0:08
Peak number of trams	15	9	13

Table 17 - Number of Trams needed for each service (based on 8 & 8 Trams per hour scenario)

Network Option	1a	1a and 1b
PVR	24	28
Standby/maintenance/repair/training	3	3
Total tram fleet required	27	31

Table 18 - Number of Trams needed for each Phase (based on 8 & 8 Trams per hour scenario)

2.21 Tram Fleet Kilometre Usage

The journey times and fleet sizes calculated above can be used to derive an approximate annual fleet and per Tram kilometre run of:

INITIAL OPERATING TIMETABLE

6tph	Daily	Days	Km	6tph	Daily	Days	Km
Weekdays	5531	261	1443591	Weekdays	7103	261	1853883
Saturdays	5363	52	278876	Saturdays	6950	52	361400
Sundays	5318	52	276536	Sundays	6815	52	354380
Total			**1999003**	**Total**			**2569663**
Per Tram 27 trams			**74037**	**Per Tram 27 trams**			**95173**
ENHANCED AM & PM PEAK SERVICE							
8tph	**Daily**	**Days**	**Km**	**8tph**	**Daily**	**Days**	**Km**
Weekdays	6217	261	1622596	Weekdays	7840	261	2046240
Saturdays	5363	52	320150	Saturdays	6950	52	361400
Sundays	5318	52	276536	Sundays	6815	52	354380
Total			**2219282**	**Total**			**2762020**
Per Tram 27 trams			**82196**	**Per Tram 31 trams**			**89097**
FLAT DAYTIME PEAK SERVICE							
8tph	**Daily**	**Days**	**Km**	**8tph**	**Daily**	**Days**	**Km**
Weekdays	7436	261	1940796	Weekdays	9347	261	2439567
Saturdays	7292	52	379184	Saturdays	9224	52	479648
Sundays	5318	52	276536	Sundays	6815	52	354380
Total			**2596516**	**Total**			**3273595**
Per Tram 27 trams			**96167**	**Per Tram 31 trams**			**105600**

Figure 7 – Operational Timetable

The principal assumptions are:

- 'Empty' running to and from the Depot is included;

3 General

3.1 Definitions

In these Employer's Requirements, Schedule 1 (Definitions and Interpretation) and the following definitions shall apply:

Table 19 - Definitions

Term	Definition
Act	An Act of Parliament or the Scottish Parliament following consideration and approval of a Bill
AFC	Automatic Fare Collection (see also TVM)
AIP	Approval in Principle for structures
ALARP	As low as reasonably practicable
Approval	(see Consent); also an approval of detail by an authority where consent is deemed to be granted by with prior conditions.
AutoCAD	Proprietary software used for engineering design
AW0 – AW5	Standard loading conditions for Tram Vehicles defined at Section 22.2.3
BRB	British Railways Board
BS	British Standard
CAA	Civil Aviation Authority
Case for Safety	All necessary documentation, information and other requirements pursuant to the Railways and Other Guided Transport Systems (Safety) Regulations 2006;
CAR	Corrective Action Report
CCTV	Closed Circuit Television
CIBSE	Chartered Institute of Building Services Engineers
CMS	Central Management System
COCP	Code of Construction Practice
COMP	Code of Maintenance Practice
Communications Plan	The Plan to be developed in accordance with the Employer's Requirements
COSHH	Control of Substances Hazardous to Health Regulations 1998
DAT	Delivery Acceptance Test
DCCB	Direct Current Circuit Breaker
DDA	Disability Discrimination Act
Developed	The enlarged Kinematic Envelope that takes into account all of the possible effects of

Term	Definition
Kinematic Envelope (DKE)	curvature, including superelevation of the track together with end and centre throw of the Tram. It is speed dependent and unique to a particular location at a given speed (See also Static Envelope, Dynamic Envelope and Kinematic Envelope) (See also RSPG Part 2 Section G – Guidance on Tramways).
DfT	Department for Transport
DMRB	Design Manual for Roads and Bridges
DSD	Drivers Safety Device
Dynamic Envelope	The Static Envelope enlarged to the maximum possible displacement of the Tram in motion on straight track. It takes into account suspension characteristics and allowances for maintenance and wear of Trams. (End and Centre throw is not included.) (See also Static Envelope, Kinematic Envelope and Developed Kinematic Envelope.) (See also RSPG Part 2 Section G – Guidance on Tramways)
EDMS	Electronic Document Management System
EIA	Environmental Impact Assessment
EMC	Electromagnetic Compatibility
EMI	Electromagnetic Interference
EMP	Environmental Management Plan
Enhanced Timetable	The Timetable described at Part 1a with 16 trams per hour Hay to Oct
ES	Environmental Statement
FAT	Factory Acceptance Test
GDPO	Town and Country Planning (General Development Procedure)(Scotland) Order 1992
GPR	Ground penetrating radar
Grandfather Rights	A longstanding right where the original reason and date of the granting of the right is unknown
GSN	Goal Structured Notation
HCI	Human Computer Interface
HF	Human Factors
HLM	High Level Model
HMRI	Her Majesty's Railway Inspectorate (or the appropriate approval regime in force)
HS	Historic Scotland
HSCB	High Speed Circuit Breaker
HVAC	Heating, Ventilating and Air Conditioning
ICP	Independent Competent Person
ISO	International Organisation for Standardisation
ITSO	Integrated Transport Smartcard Organisation - a non profit sharing, member owned organisation supported by the Department for Transport

Term	Definition
ItN	Invitation to Negotiate
JRC	Joint Revenue Committee
Kinematic Envelope (DKE)	The Dynamic Envelope enlarged to allow for the permitted tolerances in track gauge, alignment, level and cross-level and the dynamic and static effects of track wear. It is speed dependant. See also Static Envelope, Dynamic Envelope and Developed Kinematic Envelope. (See also RSPG Part 2 Section G – Guidance on Tramways)
LBC	Listed Building Consent
LHMP	Landscape and Habitat Management Plan
Lifecycle Replacement Plan	The Plan to be developed in accordance with the Employer's Requirements
Line 3	A planned extension of the Edinburgh Tram Network to the south east. Line 3 is not currently being progressed although some safeguarding provisions are required.
LRU	Line Replaceable Unit
LRV	Light Rail Vehicle
Maintainer	Infrastructure and Tram Vehicle maintenance
Markov Analysis	Reliability modelling method
MUDFA	Multi-Utilities Diversion Framework Agreement
MX	Proprietary software used for engineering design
NCR	Non Conformance Report
NR	Network Rail
OEM	Original Equipment Manufacturer
OLE	Overhead Line Equipment
Operational Timetable	The Timetable described at Table 2 – First and Last Trams for the 6 & 6 Tram per Hour Operational Timetable Table 2 – First and Last Tram Times for the 6 & 6 Tram per Hour Operational Timetable - Hay to Oct
ORR	Office of Rail Regulation
ORS	Operational Radio System
OTMR	On Tram Monitoring and Recording
PA	Public Address System
Pan	Pantograph
PCC	Point Control Cabinet
PCS	Point Control System
PHC	Point Heating Cabinet
PHP	Passenger Help Point
PEHP	Passenger Emergency Help Point

Term	Definition
PID	Passenger Information Display
Prior Approval	Written approval by any approving body evidencing prior consent.
QA	Quality Assurance
Quality Management Plan	The Plan to be developed in accordance with the Employer's Requirements
RAMS	Reliability, Availability, Maintainability and Safety
RSPG	Railway Safety Principles and Guidance
RSP2	Ralilway Safety Publication 2 – Guidance on Tramways
RTPI	Real Time Passenger Information
RVAR	Rail Vehicle Accessibility Regulations
Safety Management Plan	The Plan to be developed in accordance with the Employer's Requirements
SAT	System Acceptance Test
SCADA	Supervisory, Control and Data Acquisition
SCC	Supervisory Control and Communications
SCT	Site Commissioning Test
SEPA	Scottish Environment Protection Agency
Shadow Running	Validation of the Operational Timetable without carrying passengers
SIT	System Integration Test
SP	Swept Path
SSSI	Site of Special Scientific Interest
STAG	Scottish Transport Assessment Guidance
Static Envelope	The maximum cross-section of Trams loaded or unloaded at rest on straight and level track, taking account of tolerances in the manufacture of the trams and the effects on the suspension of tram loading and tram loads arising from the wind and other weather. See also Dynamic Envelope, Kinematic Envelope, and Developed Kinematic Envelope. (See also RSPG Part 2 Section G – Guidance on Tramways)
Sub-System	An individual technical element e.g. communications, Tram etc.
SUC	Statutory Utility Company
SUDS	Sustainable Urban Drainage System ('soakaways')
The System	Collectively the technical sub-systems that together form the Edinburgh Tram Network.
System Interface	The interaction point between the sub-systems
Test Plan	The proposals developed by the Infraco for the structured and programmed testing of the components and the System

Term	Definition
Test T1 – T5	Formal Test requirements defined at Tests and Commissioning
TPDS	Tram Position and Detection System
Tramway Path	The area reserved for a moving tram in its environment. (See also RSP2 – Guidance on Tramways)
Transdev	"Transdev Edinburgh Tram Limited" (TETL) the Edinburgh Tram Network Operator
TRO	Traffic Regulation Order
TRY	Test Reference Year
TTRO	Temporary Traffic Regulation Order
TSS	Traction Sub-Station
TSS	Technical Support Services – advisors to **tie**.
TVM	Ticket Vending Machine (see also AFC)
UTC	Urban Traffic Control
UPS	Uninterruptible Power Supply
WBS	Work Breakdown Structure
WEBS	West of Edinburgh Busway Scheme

3.2 Infraco Services

3.3 General

This section provides a summary of the services that shall be required to be undertaken by the Infraco throughout the duration of the Infraco Works, or during particular stages of the Infraco Works, as appropriate.

3.4 Management and Technical Services

3.5 Summary of Deliverables

This section summarises the Deliverables that shall be provided by the Infraco. The Deliverables shall be provided in accordance with the requirements of the Agreement and shall be reviewed in accordance with the Review Procedure.

The Infraco shall complete the Deliverables set out hereunder, in the timescales agreed, and as identified in the Submittal Programme referred to.

In addition to the required Deliverables, this section also develops, where appropriate, the management and technical systems and services that shall be required to be provided by the Infraco to meet these Employer's Requirements. The Infraco shall develop and submit the following Deliverables for approval by **tie** in accordance with the Review Procedure.

Table 20 - Table showing Summary of Deliverables

Communications, Meetings and Reporting
Communications Plan
Meetings Schedule
Progress Photos
Progress Reports
Site Reports
Topics Register
Programme
Programme to include Design, Construction, Snagging, Commissioning, training, shadow running and opening to passenger service
Time Chainage Diagram
Management Plans
Construction Health and Safety Plan

Construction Plan
Construction Stage Environmental & Sustainability Management Plan(s)
Documentation associated with the completion of all research, surveys and inspections
Environmental Action Plan (EAP)
Infraco KPI Reporting
Infraco Performance Measurement
Network Rail Interface Plan
Overall Approvals Management Plan and Approvals Management Plan
Project Health & Safety File
Project Management Plan
Quality Forms (associated with the Project Safety and Quality Interface document)
Quality Management Plan
Research, Surveys and Inspections
Safety Forms associated with the Project Safety and Quality Interface document.
Safety Management Plan
Schedule of Internal Audits
System Safety Management Plan
Testing and Commissioning Plans
Training Plans

Design Deliverables

Earthing and Bonding Plan
Case for Safety for the Network or Geographical Sections as applicable
Design Stage Configuration Management Plan
Design Stage Verification & Validation Plan
Detailed Cause Consequence Analysis
Functional Hazard Analysis
Hazard Log & Risk Register
Interface Control Documents
Interface Schedules
List of Applicable Standards
Procurement Plan
Requirements Specification / Database
Scheme Plan
Road Network Plan of affected areas
System Architecture Specification
System Design Specification
System Design Test Specification
System Interface Management Plan
System Interface Register

Detailed drawings and other detailed design documentation
Archaeological & Heritage Mitigation Plan
Boundaries Treatment Management Plan
Construction Advice
Construction Site Drainage Plan
Initial and Final Buildability Reports
Landscape and Habitat Management Plan
Method of Working around Protected Species
Other construction advice as noted
Procedures for dealing with Unidentified Apparatus or Recorded Artificial Obstructions
Schedule 3 (Code of Construction Practice) Deliverables
Schedule and Conditional Surveys of Structures / Buildings Documentation (Dilapidation)
Strategy for controlling Invasive and Alien Species
Survey Photographs of Reinstatement Work
Temporary Works, Security and Fencing Arrangements Plan
Waste Management Plan
Cost Management
Actual / Planned / Forecast Spend Tables / Curves
Change Control Schedule and background information
Cost Loaded Programme / Earned Value Analysis based on WBS structure
Cost Report
Schedule of Compensation Events and background information
Value Management Estimates / Analysis
Risk
Commissioning Risk Control Report
Construction Risk Control Report
Infraco Assumptions Register
Infraco Risk Management Plan
Infraco Risk Register
Operational and Maintenance Report
Residual Risk Control Report
Risk Progress Reports
Traffic Management and TTROs
Access Control Permit Procedures
Access Control Permits and Permits to Work
Permits to Work and Utility Permits to Work Procedures
Traffic Management and Work Site Staging Plan
TTRO Obligations and Traffic Management Procedures

Method Statements
Method Statements
Schedule and Conditional Surveys of Structures / Buildings and Documentation (to avoid delay to the Service Commencement Date)
Survey Photographs of Reinstatement Work
Surveys of Structures which may affect Progress
Stakeholder Management Deliverables
Communications Log
Information for the **tie** monthly newsletter
Procurement Schedule
Traffic Routing Map
Weekly Newsletter
Weekly updates of Progress
Other Deliverables as defined below:
Asset Register
Documentation - As-built Design Drawings
Infrastructure Maintenance Plan
Maintenance Plan
O&M manuals
Overall Approvals Management Plan and Approvals Management Plan
Overall Test and Commissioning Plan
Simulation
Spare Parts manuals
Spare Parts, Tools & Test Equipment
Staffing Plan and Recruitment, Retention and Training Plan
System Acceptance
System Integration – including System Integration Plan

3.6 Design

3.6.1 General Obligations

The Infraco shall be responsible for the complete design of the Edinburgh Tram Network including the achievement of full compliance with the Employer's Requirements. The Infraco shall be responsible for achieving the following:

- The Deliverables necessary to enable the Edinburgh Tram Network to be procured, constructed, tested, commissioned and brought into commercial service and consistent with the requirements for training and Case for Safety (taking account of the need to fully co-ordinate these activities, including with other physically-related projects, so as to minimise overall disruption) to meet these Employer's Requirements and the Programme.
- The Infraco shall produce a tram service simulation that will demonstrate that its implementation of the design will achieve the required run times, power consumption and service performance where defined in these Employer's Requirements;
- The Infraco shall ensure that the design covers all aspects of the Edinburgh Tram Network and the associated works as defined in these Employer's Requirements;
- The Infraco shall approach the design and technical services in a structured manner using a recognised 'V' life cycle model with regard to the integration of design engineering, systems engineering and safety engineering activities;
- The Infraco shall be responsible for ensuring that there are no gaps and omissions in the specification and design of the Edinburgh Tram Network;
- The Infraco shall demonstrate that the design has properly considered and adopted the most advantageous whole life cost solutions;

3.6.2 Design Approach

The design approach shall be as set out in the SDS Agreement. The Infraco shall:

- Adopt, develop and adapt the SDS Management Plans covering Configuration Management and Verification and Validation.
- Undertake such supplementary safety analysis that will allow further development of the Case for Safety concurrent with any design undertaken to prove that the Edinburgh Tram Network is acceptably safe;

- Where any new technologies are proposed by the Infraco, submit reports and presentations analysing and assessing the options and justifying the final selections of technologies in terms of time, cost, quality, safety, risk and maintainability, for review by **tie**;
- Prepare and maintain the Risk and Hazard Log;
- Prepare and maintain the System Architecture Specification;
- Prepare and maintain the System Design Specification;
- Prepare and maintain the System Design Test Specification;
- Prepare and maintain the Functional Hazard Analysis;
- Prepare and maintain the Detailed Cause Consequence Analysis;
- Prepare and maintain the Requirements Specification / Database;
- Prepare and maintain the Scheme Plan;
- Prepare and maintain the Procurement Plan;
- Prepare and maintain the Interface Schedules;
- Prepare and maintain the Earthing and Bonding Plan;
- Prepare and maintain the detailed drawings and other detailed design documentation;

3.6.3 Transport Modelling

The Infraco shall procure that the SDS provider performs its obligations in respect of

- transport modelling as such obligations are set out in the SDS Agreement.
- detailed traffic junction design recognition and evaluation and wider area effect assessment;
- temporary traffic diversions and support to **tie** where reasonably required in respect of obtaining the Traffic Regulation Order including impact analysis as defined in section 12.12.

For detailed traffic signal modelling; Infraco shall provide adequate modelling upon which to baseits design.

3.6.4 Environmental

All equipment shall meet its required operational functionality in accordance with these Employer's Requirements. The Edinburgh Tram Network and its components shall take cognisance of, inter alia, the following factors: electrical interference, dust, vibration, supply voltage variations, radio signal variations, solar radiation, temperature, humidity, salt, mist, wind, precipitation, snow etc.

Table 21 shows average temperature and humidity conditions for the region. Based on the given information all equipment shall be suitable for a working life as defined in Design Life of these Employer's Requirements under maximum ambient temperature range from – 9° to + 28 ° C, unless otherwise agreed by **tie**.

Edinburgh (eastern Scotland)

	Sunshine (average hours per day)	Temperatures								Precipitation and humidity				Wet days (more than 0.1 mm/0.004 in)	
		Average daily				Highest recorded		Lowest recorded		Relative humidity		Average monthly precipitation			
		minimum		maximum						900	x				
		°C	°F	°C	°F	°C	°F	°C	°F	%		mm	in		
Jan	2	1	34	6	42	14	57	-8	17	84		57	2	17	Jan
Feb	3	1	34	6	43	14	58	-9	15	83		39	2	15	Feb
March	4	2	36	8	46	20	68	-6	21	81		39	2	15	March
April	5	4	39	11	51	22	72	-4	25	75		39	2	14	April
May	6	6	43	14	56	24	76	-1	31	76		54	2	14	May
June	6	9	49	17	62	28	83	3	37	75		47	2	15	June
July	5	11	52	18	65	28	83	6	42	78		83	3	17	July
Aug	4	11	52	18	64	28	82	4	40	80		77	3	16	Aug
Sept	4	9	49	16	60	25	77	1	33	80		57	2	16	Sept
Oct	3	7	44	12	54	20	68	-2	28	82		65	3	17	Oct
Nov	2	4	39	9	48	19	67	-4	24	83		62	2	17	Nov
Dec	1	2	36	7	44	14	58	-7	20	84		57	2	18	Dec

Based on readings for 30 years at 55°55' N, 3°11' W, altitude 134 m/440 ft.

Where equipment is enclosed in equipment housings / enclosures the equipment contained therein shall be capable of operating at an external ambient temperature 15°C higher than the upper limit and at a temperature of 5°C lower than the figures in Table 21 taking into account any heat generated by the equipment.

All equipment housings / enclosures that contain electronic equipment shall be so equipped to minimise the occurrence of condensation within the enclosure.

The following data in Figures 8 & 9 are based on the Edinburgh Test Reference Year (TRY) as given by CIBSE. It is a synthesised weather year based on 20 years of record data. CIBSE recommend that this type of weather data be used for analysing energy use and overall environmental performance.

Temperature

Dry Bulb Temperature	MAX 26.7°C	MIN –10.1°C	MEAN 8.43°C
Wet Bulb Temperature	MAX 18.9°C	MIN –10.7°C	MEAN 6.82°C

Figure 8 - Dry Bulb Temperature Analysis 1: Number of Hours per Year That the Dry Bulb Temperature is Greater Than the Given Value

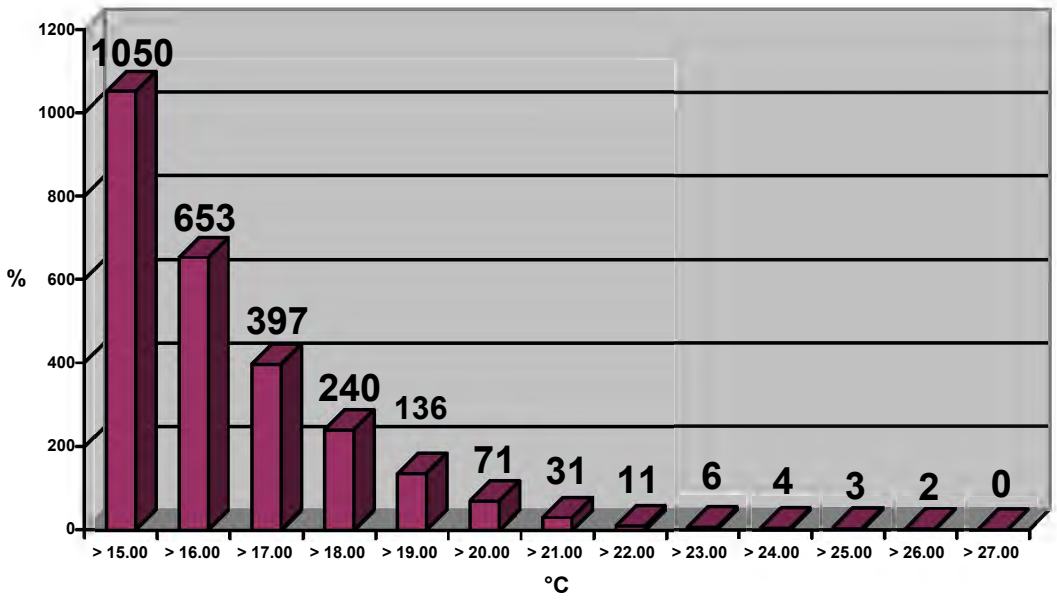

Figure 9 - Dry Bulb Temperature Analysis 2: Number of Hours per Year That the Dry Bulb Temperature is Less Than the Given Value

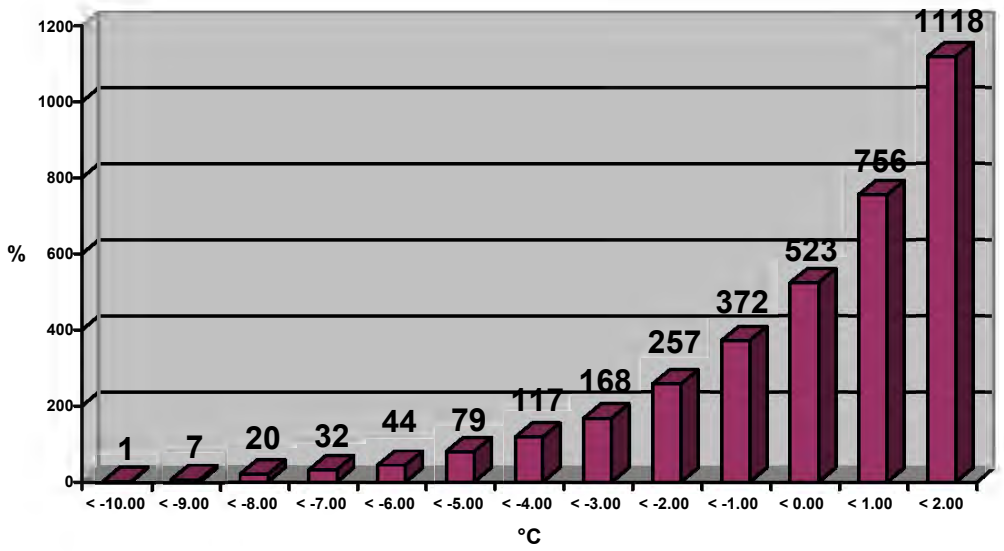

Wind Speed MAX 19.5m/s MIN 0m/s MEAN 4.6m/s

3.7 Construction-related Deliverables (Schedule 3 Requirements)

The following deliverables, from and with regard to *Schedule 3 (Code of Construction Practice and Code of Maintenance Practice)* are highlighted for submission in accordance with the Review Procedure:

- In accordance with Schedule 3 (Code of Construction Practice and Code of Maintenance Practice), the Infraco shall compile a schedule of all buildings, or other structures, which may be at risk of physical damage as a result of the Infraco Works. Furthermore records of the condition and surveys of any defects shall be prepared by the Infraco;

- Under Schedule 3 (Code of Construction Practice and Code of Maintenance Practice) there is a requirement for the Infraco to undertake works to address defects in existing structures, caused by the Infraco Works. Where such work is completed the Infraco shall be required to take appropriate photographs to fully demonstrate the quality of the reinstatement works;

3.8 Construction Advice and Buildability

The Infraco shall be required to develop a =Buildability Report in accordance with the Review Procedure.

The Infraco shall provide a Buildability Report in accordance with the Review Procedure, which shall address the following.

- The Infraco shall propose construction methods which shall be utilised in respect of the Infraco Works. The Infraco shall also advise **tie** on the time and cost implications of any alternative solutions proposed by the Infraco and which have been accepted by **tie**. The Infraco shall initiate the requirements for Temporary Works, and the programme for approvals for such Temporary Works and their execution.

- Notwithstanding the Infraco's obligations with respect to compliance with the third party agreements, the Infraco shall advise **tie** on the potential impact of the Infraco Works upon neighbouring occupiers and users of nearby roads, railways, buildings and airport facilities and the Infraco shall plan the execution of the Infraco Works in such a way as to minimise disruption and prevent nuisance.

- The Infraco shall advise **tie** on the provision and layout of the main site office and local Work Sector / Work Section facilities and services to be provided or secured by the Infraco. **tie**'s requirements for office accommodation at the main site office are expressed in this section.

The Infraco shall prepare, maintain and comply with plans, schedules and drawings that shall show the Infraco's proposals for temporary works, security and fencing arrangements throughout the duration of the Infraco Works ("Temporary Works, Security and Fencing Arrangements Plan").

3.9 Site Support Facilities for tie

The Infraco shall be responsible for the provision, servicing, maintenance and removal of the specified **tie** office accommodation and transport for the use of **tie** officers and staff

The Infraco shall provide and maintain fully serviced office accommodation and furnishings throughout the duration of the Infraco Works, in accordance with the following requirements:

- Office accommodation to accommodate 10 desks (Infraco supply) each with at least one secure lockable drawer, a swivel cloth upholstered chair. ;
- Three separate offices with a minimum working space of 16m^2;
- 2 meeting rooms suitable for sitting up to 20 and 8 people respectively;
- Male and female toilets. Minimum area 3m^2 each;
- Changing/Locker facilities;
- Kitchen facilities;
- Drying facilities;
- Male & Female shower room;
- Parking for up to 15 cars.

The Infraco shall prepare and submit an office layout based on the accommodation description set out below for approval by **tie**.

The Infraco shall integrate this accommodation with the Infraco's own accommodation and, subject to proposals which are acceptable to **tie**, the meeting rooms and welfare facilities may be shared by the Infraco.

3.9.1 Fittings and Furnishings

The Infraco shall also provide the following as minimum requirements:

General Office

- 7 x 4 drawer lockable metal filing cabinets
- 6 wall mounted notice board 1m high 1.5m wide
- 10 waste paper baskets
- 10 telephones connected to 2 lines
- 1 fax machine connected to a separate dedicated line
- 1 high output combined printer and photocopier capable of producing A4 and A3 black and white copies
- 10 connections to internet via broadband, all able to connect at same time
- 1 plan layout table 1 x 2 m
- 1 A0 drawing board and drafting equipment
- 10 desk lamps
- 10 letter tray/ filing baskets
- 2 m of book shelves at 6 of the desks
- 6 large white boards

Meeting Rooms

- Suitably sized tables and the requisite number of chairs for each of the two meeting rooms referred to above.

- 3 flip charts and flip chart paper as required and 1 large wall mounted white board in each meeting room

Changing / drying room

- Lockers c/w locks and keys for 30 people
- 4 chairs
- 30 coat pegs mounted on wall
- 1 boot pull.

General

- A security alarm system
- Access doors, fitted with five lever mortice locks and 6 sets of keys

3.9.2 Services

The Infraco shall provide, install and maintain all the services i.e. Gas, electric, water, drainage, telephone (two lines), broadband etc necessary to ensure effective occupation by **tie** of the accommodation for the duration of the Infraco Works

The Infraco shall provide install and maintain a printer/photocopier capable of producing A4 and A3 size black and white photocopies. The Infraco shall ensure that sufficient stocks of consumables (including paper and toner) are available at all times. Subject to acceptable proposals, the photocopier / fax may be shared by the Infraco and **tie**.

The Infraco shall provide tea, coffee, sugar fresh milk and a supply of drinking water for use by **tie** for the duration of the Infraco Works.

The Infraco shall arrange for the servicing and daily cleaning of the accommodation.

Toilet paper, paper towels, soap, and detergents shall be provided by the Infraco as required.

3.9.3 Equipment

The Infraco shall provide the following equipment for the exclusive use of **tie** throughout the duration of the Infraco Works:

- 10 x 10m long steel tape measures
- 10 x 50m long tape measures
- 10 x high output hand-held torches
- 2 approved electronic utility tracers for tracing/locating cables and pipes
- other consumables as may be required by **tie** (i.e. marker paint etc.).

The Infraco shall provide surveying/setting out equipment to **tie** as reasonably required, in connection with the Infraco Works.

3.9.4 Site Vehicles

The Infraco shall provide, licence, insure (comprehensive for any qualified driver together with any authorised passengers and the carriage of goods or samples), service and maintain four 4 wheeled road vehicles (suitable for the Edinburgh Tram Network) and visitor transport for the exclusive use of **tie**'s representative and staff to enable them to carry out their duties for the duration of the Agreement. The number and type shall be to the specific approval of **tie**.

The vehicles shall be delivered and maintained by the Infraco in good, roadworthy condition.

The Infraco shall provide fuel, oil and maintenance in conformity with the vehicle manufacturers' recommendations and shall clean the vehicles inside and outside as required by **tie**.

A suitable replacement vehicle shall be provided by the Infraco in the event any vehicle being out of service for more than 24 hours.

The Infraco shall ensure that each vehicle shall be fitted with approved warning beacons and any other safety equipment as required for work on roads or within the boundaries of the Edinburgh International Airport.

3.10 Spare Parts, Tools and Test Equipment

The Infraco shall be responsible for the provision, delivery, offloading and placing into stores of the necessary Spares Parts, Tools & Test Equipment.

Detailed requirements and deliverables in respect of the Spares Parts, tools and Test Equipment responsibilities are included in the Agreement.

3.11 Documentation

The Infraco shall be responsible for the provision of all as built / constructed / manufactured drawings, manufacturers information, test certification and other documentation to be provided inaccordance with the Agreement.

Detailed requirements and Deliverables in respect of the documentation responsibilities are included within the Agreement and the Maintenance section of these Employer's Requirements.

3.12 Training

The Infraco shall be responsible for all necessary initial training associated with the operation and maintenance of the Edinburgh Tram Network. Detailed requirements and deliverables in respect of the Training responsibilities are included within Section 40 (*Maintenance*) of these Employer's Requirements.

4 Use of Industry Standard Equipment

The Infraco shall base its system supply on Commercial Off the Shelf (COTS) equipment and software. The use of proprietary equipment and software which is not available on a COTS basis is prohibited unless prior written agreement has been obtained from **tie,** other than that which is specified in the Infraco Proposal.

This is to allow the maintenance, extension and modification of the ETN by third party suppliers and maintainers if necessary.

All electronic interfaces between subsystems shall use open standards and shall utilise non-proprietary protocol.

5 System Identity and Branding

A single system identity shall be applied to the ETN. This shall be developed by **tie** through a specialist contractor appointed by **tie**. The output of this contract with the specialist contractor shall be a documented set of design guidelines which shall be incorporated into these Employer's Requirements as Appendix 1 and which shall be complied with by the Infraco in respect of the Infraco Works. The design guidelines shall include the following elements:

- Logo and other elements of the ETN's graphic identity;
- Signage;
- Application of the systems identity to the following:
  - Ticket machines;
  - Stop furniture;
  - Passenger information;
  - Depot.
- Tram livery;
- Tram interior;
- Uniforms;
- Pictograms;
- Other aspects of the ETN which are visible to the public.

6 Design Life

The equipment and systems to be supplied for the Edinburgh Tram Network shall be designed and built by the Infraco to a standard that shall ensure the System as a whole is capable of continuous operation for a minimum period of 15 years from the Service Commencement Date for each Phase.

Individual items of Infrastructure and equipment shall have a design life as indicated in the table below. Where the design life for an item of equipment is not specified, a minimum of 15 years shall be assumed. All design lives are from the Service Commencement Date for each Phase.

Item of Equipment or System	Design Life
Trams	30 years
Structures	120 years
Track Bed	50 years
Track	25 years
Rails in Straight Lines	20 years
OLE	30 years
Power Cables	30 years
Substations and Substation Equipment	30 years
Tramstop Platforms	50 years
Tramstop Superstructure (including shelters and poles)	25 years
Tram Position and Detection equipment	15 years
Passenger Information Displays	10 years
Telephone Handsets	10 years
Telephone PABX	15 years
Voice recorder	15 years
PA Controller	10 years
Loudspeakers	15 years
Hand Portable Radio Handsets	5 years
Vehicle Mobile Radio Equipment	7 years

Item of Equipment or System	Design Life
Radio Base Station Equipment	15 years
Radio Masts and Antennae	15 years
Passenger Help Points	15 years
CCTV cameras	7 years
CCTV Digital Video Recorders	7 years
SCADA outstations	20 years
Fibre Optic Cabling and Patch Panels	25 years
Fibre Optic Switches, Routers, Hubs	15 years
Other communications equipment	15 years
Cabinets	25 years
UPS systems (excluding batteries)	15 years
Copper Communications Cables	25 years
Batteries (if employed)	4 years
Workstations including Monitors	5 years
Servers	5 years
Standard hand tools	5 years
Portable electrical tools	7 years

Table 22 - Equipment Design Life

7 Extensibility

Table 23 below sets out the assumptions being made in the design of Phase 1a and Phase 1b to allow Phases 2 and 3 to be added with minimum change, and also for future increase in service levels on Phase 1a/1b (over the "8+8" pattern) and for the addition on the proposed Line 3 (assumed routing Bridges-Princes St-Haymarket).

Area	Topic	Phase 1a/1b Design Basis	Provision for Phases 2 and 3	Provision for Phase 1a/1b increased service	Provision for ETL3 (Edinburgh Tram Line 3)	Provisions for other purposes
Track Layout	Roseburn Junction/Delta	Design for full delta	n/a		n/a	n/a
	Balgreen loop and crossover	Design for loop and crossover	n/a		n/a	n/a
	Granton Square	Design for interim terminus	Design for track continuation; build initial as over-run for terminus	n/a	n/a	n/a
	Newhaven	Design for interim terminus	Design for track continuation	n/a	n/a	n/a

Area	Topic	Phase 1a/1b Design Basis	Provision for Phases 2 and 3	Provision for Phase 1a/1b increased service	Provision for ETL3 (Edinburgh Tram Line 3)	Provisions for other purposes
	Ingliston Junction and P&R Tramstop	Make provision for Phase 3 and long-term aspirations	Alignment design not to preclude an allowance terminating Phase 3 service at Ingliston P&R and for East-West continuation from Phase 1	n/a	n/a	n/a
	Track alignment at Princes St/South St Andrew St Junction	Make Provision for Line 3	n/a	n/a	Alignment to allow pointwork and appropriate future traffic management(See CR078)	n/a
Modelling	Network modelling inc. for TSJs	To support 8+8 service	None	None	None	n/a
Traction Power	Traction Power Supply system (Substations/OLE/cabling)	To support 8+8 service +50% addition	Part of basic design	In basic design	Effectively in basic design, as an alternative use of the increased service design provision	n/a

Area	Topic	Phase 1a/1b Design Basis	Provision for Phases 2 and 3	Provision for Phase 1a/1b increased service	Provision for ETL3 (Edinburgh Tram Line 3)	Provisions for other purposes
	Definition of Power characteristics (and other parameters for modelling)	Full traction characteristic of the selected tram	n/a	n/a	n/a	n/a
Depot	Stabling sidings	Design for 35, build for 27	Inc. in 8 extra	Inc. in 8 extra	Not specifically included	n/a
	Workshop	8 Berths theoretical maximum; (practically:4 berths plus 2 service roads)	Initial design would accommodate	Initial design would accommodate	Not specifically included	n/a
	Depot staff accommodation	Numbers to be accommodated nominally match fleet that could be accommodated	Initial design would accommodate	Initial design would accommodate	Not included	n/a
	Depot car parking	See drawings	n/a	n/a	Not included	n/a
	Depot Control Centre	Design for 5 desks; provide 3	Design layout would accommodate	Initial provision would accommodate	Design layout would accommodate	n/a

Area	Topic	Phase 1a/1b Design Basis	Provision for Phases 2 and 3	Provision for Phase 1a/1b increased service	Provision for ETL3 (Edinburgh Tram Line 3)	Provisions for other purposes
	Depot stores	Design basis	Would accommodate	Would accommodate	Not included	n/a
						n/a
SCC	ODN capacity					
	General capacity	There is an initial +50% requirement above the calculated maximum usage	TBA	TBA	TBA	n/a
	Route coding capacity	3-digit route-coding included	Included in base	n/a	Included in base	n/a
	Radio system capacity	A minimum[2] of two channels at each base station	TBA	TBA	TBA	n/a
Roads	Traffic Signalled Junction design and modelling (inc. at temporary termini)	Phase 1a/1b only	Possibly ductwork at temporary termini	n/a	None	n/a

[2] *The word maximum would allow no channels to be provided and still be compliant! Two channels ok as a minimum.*

Area	Topic	Phase 1a/1b Design Basis	Provision for Phases 2 and 3	Provision for Phase 1a/1b increased service	Provision for ETL3 (Edinburgh Tram Line 3)	Provisions for other purposes
	Traffic Management layout at Princes St/South St Andrew St	Phase 1a only	n/a	n/a	None	n/a
	Traffic signalling ductwork	Design basis	n/a	n/a	n/a	Allowance in design at locations where additional signals might be provided
Tramway Ducting	Ductwork and access chambers	A minimum of 20% addition of the number of ducts	Initial design would accommodate	Initial design would accommodate	Initial design would accommodate	n/a
Utilities	Cross-track ducts	Where agreed with the SUCs, provision of secondary spare duct	n/a	n/a	n/a	Provision in design basis

Table 23 - Extensibility Assumptions

8 Standards

8.1 Principles

Where there is no relevant standard specified in the Agreement, the Infraco Works shall comply as a minimum with relevant current British or European Standards, DfT and/or Scottish Government Publications, Standards and Technical Memoranda or IEC/ISO Standards in accordance with the order of precedence set out in section 8.2.

The Infraco Works shall comply with the ORR Safety Publication 2 and with the requirements of HMRI. Where standards do not exist, the Infraco Works shall comply with Good Industry Practice and all relevant codes of practice and guidance notes. Materials or equipment provided shall be in accordance with regulations and standards appropriate to the United Kingdom or the country of manufacture, but only where in the opinion of **tie**, compliance with the regulations and standards appropriate to the country of manufacture ensures an equivalent or higher quality than the regulations and standards appropriate to the United Kingdom. In such situations, the onus will be on the Infraco to prove that they are of an equivalent or higher quality.

Where standards are specified in these Employer's Requirements, these shall include any successor or replacement standards, announced or in force before7 August 2007 and in relation to Tram Supply Obligations and Tram Maintenance Obligations only, 14 September 2007, which provide an equivalent or improved quality and standard.

The Infraco shall comply with standards reasonably required by the relevant Roads Authority, including any local standards and amendments to the Design Manual for Roads and Bridges.

The Infraco shall be responsible for identifying all proposed departures from standards: in these instances, the Infraco shall seek the formal approval of **tie**, and provide all details justifying the departure from standards.

The Infraco shall be responsible for making any necessary applications to the relevant Roads Authority for departure from standards and for complying with the resulting consequences, including those arising from the failure of an application for such departure.

The Infraco shall ensure that all materials, construction and workmanship comprised in the Infraco Works meet the requirements of the British or European standards relevant to the materials used. Materials used should have a British Board of Agrément Certificate wherever reasonably possible which identifies a lifespan for that material.

8.2 Hierarchy of Precedence.

The order of precedence shall be as follows:

1) Legislation;

2) Guidance;

3) Where not included in Guidance;

(i.) British Standards;

(ii.) Scottish Government standards and guidance;

(iii.) Local Authority standards (CEC);

(iv.) Statutory Utility standards;

(v.) International Industry standards.

8.3 The Infraco's Responsibilities

The Infraco in its system integrator role and as the system designer shall be responsible for:

- As appropriate, the development of, and compliance to, robust management processes in respect of compliance with Law and any other relevant standards or regulations included in the Agreement and section 8.2.
- The identification and selection of appropriate standards for all aspects of the Infraco Works
- The identification and definition of any application limits of such standards for all aspects and at all stages of the Infraco Works (such as design, construction, testing and commissioning, operation, and maintenance) in particular at the network, System and subsystem level.
- The identification and successful resolution of any conflicts within and between the obligations contained within this section 8 and Law.

8.3.1 Applicable Standards

Applicable standards are listed in the following table.

Specification No.	Specification Title	Structures	Track	Roads	Power Distr.	Fare Collection	OLE	SC & C	Tramstops	Depot	Trams
BS 8500 – 1: 2002	Concrete – Complementary British Standard to BS EN 206-1. Method for specifying and guidance for specifier	x	x	x			x		x	x	
BS 8500 – 2: 2002	Concrete – Complementary British Standard to BS EN 206-1. Specification for constituents material and concrete	x	x	x			x		x	x	
BRE Special Digest Nr 1	Concrete in aggressive ground.	x	x	x			x		x	x	
BS 4449: 1997	Specification for carbon steel bars for reinforcement of concrete	x	x	x			x		x	x	
BS 6744: 2001	Stainless steel bars for the reinforcement and use in concrete – Requirements and test methods	x	x	x			x		x	x	

Specification No.	Specification Title	Structures	Track	Roads	Power Distr.	Fare Collection	OLE	SC & C	Tramstops	Depot	Trams
BS EN 10210 S355 J2H	Steelwork: Hollow sections	x					x				
BS EN 10025 S355J2G3	Steelwork: All other sections	x					x			x	
BS 5400 -	Steel, Concrete and Composite Bridges	x									
BS 5400 - Part 1: 1988	General Statement (see BD 15/92)	x									
BS 5400 Part 2: 1978	Specification for Loads (See BD 37/01)	x									
BS 5400 Part 3: 2000	Code of Practice for Design of Steel Bridges	x									
BS 5400 Part 4: 1990	Code of Practice for Design of Concrete Bridges (see IA.5 and BD 24/92)	x									
BS 5400 Part 5: 1979	Code of Practice for Design of Composite Bridges (see BD 16/82)	x									
BS 5400 Part 9: 1983	Bridge Bearings (see BD 20/92)	x									
BS 5400 Part 10: 1980	Code of Practice for Fatigue (see BD 9/81)	x									

Specification No.	Specification Title	Structures	Track	Roads	Power Distr.	Fare Collection	OLE	SC & C	Tramstops	Depot	Trams
BS 5930: 1999	Code of Practice for Site Investigations	x	x	x					x	x	
BS 8666: 2000	Scheduling, Dimensioning, Bending and Cutting of Steel Reinforcement for Concrete	x	x	x			x		x	x	
BS EN 206-1: 2000	Concrete - Specification, performance, production and conformity (AMD 13189)	x	x	x			x		x	x	
BS 8500-1: 2002	Concrete – Complimentary British Standard to BS EN 206-1. Method of specifying and guidance for the specifier.	x	x	x			x		x	x	
BA 47/99 (Aug '99)	Waterproofing and Surfacing of Concrete Bridge Decks	x									
BA 41/98 (Feb '98)	The Design and Appearance of Bridges	x									
BA 42/96 (Nov '96)	The Design of Integral Bridges	x									
BA 55/00 (May '00)	The Assessment of Bridge Substructures & Foundations, Retaining Walls & Buried Structures	x									

Specification No.	Specification Title	Structures	Track	Roads	Power Distr.	Fare Collection	OLE	SC & C	Tramstops	Depot	Trams
BA 57/95 (Aug '95)	Design For Durability	x									
BD 2/79 (Jun '88)	Technical Approval of Highway Structures on Motorways and other Trunk Roads, Part IV: Procedures for Lighting Columns	x		x							
BD 2/89 (Oct '89)	Technical approval of DTp highway structures on motorways and other trunk roads Part 1, General Procedures	x									
BD 7/81 (Aug '81)	Weathering steel for highway structures	x									
BD 9/81 (Dec '81)	Implementation of BS 5400 Pt 10, CP for fatigue	x									
BD 12/95 (Feb '96)	Design of Corrugated Steel Buried Structures with spans not exceeding 8m (including circular Arches)	x									
BD 13/90 (Feb '91)	Design of Steel Bridges Use of BS 5400: Part 3: 1982	x									

Specification No.	Specification Title	Structures	Track	Roads	Power Distr.	Fare Collection	OLE	SC & C	Tramstops	Depot	Trams
BD 15/92 (Dec '92)	General Principles for the Design and Construction of Bridges Use of BS 5400: Part 1: 1988	x									
BD 16/82 (Dec '82)	Design of composite bridges - Use of BS 5400 Pt 5: 1979 including Amendment No. 1 (Dec '87)	x									
BD 20/92 (Oct '92)	Bridge Bearings Use of BS 5400: Part 9: 1983	x									
BD 21/97 (Aug '97)	The Assessment of Highway Bridges and Structures Amendment No. 1 (Aug '97)	x									
BD 24/92 (Nov '92)	Design of Concrete Highway Bridges and Structures Use of BS 5400: Part 4: 1990 Including Interim Advice Note IA.5 July 1996	x									
BD 28/87 (Jul '87)	Early thermal cracking of concrete including Amendment No. 1 (Aug '89)	x									
BD 30/87 (Jul '87)	Backfilled retaining walls and bridge abutments	x									

Specification No.	Specification Title	Structures	Track	Roads	Power Distr.	Fare Collection	OLE	SC & C	Tramstops	Depot	Trams
BD 31/87 (Jan '88)	Buried concrete box type structures	x									
BD 33/94 (Nov '94)	Expansion Joints for Use in Highway Bridge Decks	x									
BD 37/01 (Aug '01)	Loads for Highway Bridges	x									
BD 42/00 (May '00)	Design of Embedded Retaining Walls and Bridge Abutments	x									
BD 43/90 (Apr '90)	Criteria and Material for the Impregnation of Concrete Highway Structures	x									
BD 44/95 (Jan '95)	The Assessment of Concrete Highway Bridges and Structures Including Interim Advice Note IA.4 July 1996.	x									
BD 47/99 (Aug '99)	Waterproofing and Surfacing of Concrete Bridge Decks	x									
BD 48/93 (Jun '93)	The Assessment and Strengthening of Highway Bridge Supports	x									
BD 49/93 (Jan '93)	Design Rules for Aerodynamic Effects on Bridges	x									

Specification No.	Specification Title	Structures	Track	Roads	Power Distr.	Fare Collection	OLE	SC & C	Tramstops	Depot	Trams
BD 52/93 (Apr '93)	The Design of Highway Bridge Parapets	x									
BD 56/96 (Nov '96)	The Assessment of Steel Highway Bridges and Structures	x									
BD 57/95 (Aug '95)	Design for Durability	x									
BD 58/94 (Nov '94)	The Design of Concrete Highway Bridges and Structures with External and Unbonded Prestressing	x									
BD 60/94 (Apr '94)	The Design of Highway Bridges for Vehicle Collision Loads (this does not apply to existing structures).	x									
BD 70/97 (Feb '97)	Strengthened/Reinforced Soils and Other Fills for Retaining Walls and Bridge Abutments (use of BS 8006:1995)	x									
BD 74/00 (May '00)	Foundations	x					x			x	
TD 9/93 (Jun '93)	Highway Link Design	x									

Specification No.	Specification Title	Structures	Track	Roads	Power Distr.	Fare Collection	OLE	SC & C	Tramstops	Depot	Trams
TD 27/96 (Aug '96)	Cross sections and headrooms	x									
ASO10	Railway sleepers – Jarrah, Karri and Wandoo.		x								
ASO11	Railway crossing timbers – Jarrah.		x								
BS EN 13674-1:2003	Specification for railway rails (partially replaces BS11)		x								
BS47	Fishplates for railway rails.		x								
BS EN 13043:2002	Aggregates for bituminous mixtures and surface treatments for roads.		x	x						x	
BS64	Specification for normal and high strength steel bolts and nuts for railways rail fishplates.		x								
BS729	Specification for hot dip galvanised coatings on iron and steel articles.		x								
BS EN 1097-3:1998	Testing aggregates. (partially replaces BS812)		x								

Specification No.	Specification Title	Structures	Track	Roads	Power Distr.	Fare Collection	OLE	SC & C	Tramstops	Depot	Trams
BS970	Specification for wrought steels for mechanical and allied engineering purposes.		x								
BS1377	Methods of tests for soils for civil engineering purposes.	x	x	x			x			x	
BS3100 (withdrawn)	Specification for steel coatings for general engineering purposes.		x				x			x	
BS4921	Specification for sheradised coatings on iron and steel.		x				x			x	
BS EN 10270-1:2001	Specification for patented cold drawn steel wire for mechanical springs.		x								
BS6906	Methods of tests for geotextiles.		x								
BS EN 1562	Founding. Malleable cast irons.		x								
BS EN 1563	Founding. Spheroidal graphite cast iron.		x								
BS EN 13481-2	Performance requirements for fastening systems for concrete sleepers.		x								
BS EN 13481-3	Performance requirements for fastening systems for wooden sleepers.		x								

Specification No.	Specification Title	Structures	Track	Roads	Power Distr.	Fare Collection	OLE	SC & C	Tramstops	Depot	Trams
BS EN 10002 – 1	Tensile testing of metallic materials (method of test at ambient temperature).		x								
BS EN 10025	Hot rolled products of structural steels. General technical delivery conditions		x							x	
ENAAA-2	Railway applications – Track – Fastening Systems Part 2: Performance requirements for fastening system for concrete sleepers.		x								
ISO/R887	Plain washers for metric bolts, screws and nuts.		x								
RT/E/S/40045	Network Rail Standard Electric Points Heating.		x								
UIC605OR	Protection from corrosion – measures to be taken on direct current catenaries to reduce the risks on adjacent piping and cable systems.		x								
UIC860	Technical specification for the supply of rails.		x								

Specification No.	Specification Title	Structures	Track	Roads	Power Distr.	Fare Collection	OLE	SC & C	Tramstops	Depot	Trams
UIC861-2	Standard sections for points rails adapted to the UIC54 and 60kg/m rail sections.		x								
UIC861-3	Standard 60kg/m rail profiles – types UIC60 and 60E.		x								
UIC863	Technical specification for the supply of non-treated track support (wooden sleepers for standard and broad-gauge track and crossing timbers).		x								
UIC863-1	Use of non-European timbers for the manufacture of sleepers.		x								
UIC864-1	Technical specification for the supply of sleeper screws.		x								
UIC864-2	Technical specification for the supply of steel track bolts.		x								
UIC864-3	Technical specification for the supply of spring steel washers for use in permanent way.		x								

Specification No.	Specification Title	Structures	Track	Roads	Power Distr.	Fare Collection	OLE	SC & C	Tramstops	Depot	Trams
UIC864-4	Technical specification for the supply of fishplates or sections for fish-plates made of rolled steel.		x								
UIC864-5	Technical specification for the supply of rail seat pads.		x								
UIC864-6	Technical specification for the supply of baseplates and for sections for baseplates made of rolled steel.		x								
UIC864-7	Rolled profiles for baseplates for UIC rails.		x								
UIC864-8	Rolled profiles for fishplates for 54kg/m and 60kg/m rails.		x								
UIC866	Technical specification for the supply of cast manganese steel crossings for switch and crossing work.		x								
BS 1363-2:1995	13A plugs, sockets-outlets and adaptors. Part 2, Spec. for 13A switched and unswitched socket-outlets				x			x	x	x	

Specification No.	Specification Title	Structures	Track	Roads	Power Distr.	Fare Collection	OLE	SC & C	Tramstops	Depot	Trams
BS 1363-4:1995	13A plugs, socket-outlets and adaptors. Part 4, Spec. for 13A fused connection units switched and unswitched				x			x	x	x	
BS 3573:1990	Polyolefin copper-conducted telecommunications cables							x	x	x	
BS 4533-102.1:1990	Luminaires. Particular requirements. Part 102.1 Fixed general purpose luminaires				x				x	x	
BS 4579-1:1970 (withdrawn, replaced by BS EN 61238-1)	Performance of mechanical and compression joints in electric cable and wire connectors. Part 1 Compression joints in copper conductors				x	x	x	x	x	x	
BS 4579-2:1973	Performance of mechanical and compression joints in electric cable and wire connectors. Part 2 Compression joints in nickel, iron and plated copper conductors				x	x	x	x	x	x	

Specification No.	Specification Title	Structures	Track	Roads	Power Distr.	Fare Collection	OLE	SC & C	Tramstops	Depot	Trams
BS 4662:1970 (withdrawn. replaced by BS 4662:2006)	Specification for boxes for the enclosure of electrical accessories				x	x	x	x	x	x	
BS 4737-4.1:1987	Intruder alarm systems in buildings. Part 4.1 Codes of practice. Code of practice for planning and installation				x				x	x	
BS 5225-1:1975	Photometric data for luminaires. Part 1 Photometric measurements				x				x	x	
BS 5225-3:1982	Photometric data for luminaires. Part 3 Method of photometric measurement of battery-operated emergency lighting luminaires				x				x	x	

Specification No.	Specification Title	Structures	Track	Roads	Power Distr.	Fare Collection	OLE	SC & C	Tramstops	Depot	Trams
BS 5266-1:1999	Emergency lighting. Part 1 Code of practice for the emergency lighting of premises other than cinemas and certain other specified premises used for entertainment				x				x	x	
BS 5266-3:1981	Emergency lighting. Part 3 Specification for small power relays (electromagnetic) for emergency lighting applications up to and including 32A				x				x	x	
BS 5467:1997 (equivalen european harmonisation document to be provided)	Specification for 600/1000V and 1900/3300V armoured electric cables having thermosetting insulation				x		x		x	x	

Specification No.	Specification Title	Structures	Track	Roads	Power Distr.	Fare Collection	OLE	SC & C	Tramstops	Depot	Trams
BS 546:1950	2-pole and earthing-pin plugs, socket-outlets and socket-outlet adaptors. See also Supplement No 1:1960 Specification for plugs made of resilient material				x				x	x	
BS 5486-11:1989 (withdrawn, replaced by BS EN 60439)	Low-voltage switchgear and control gear assemblies. Part 11 Specification for particular requirements of fuseboards				(withdrawn, replaced by BS EN 60439)x			x	x	x	

Specification No.	Specification Title	Structures	Track	Roads	Power Distr.	Fare Collection	OLE	SC & C	Tramstops	Depot	Trams
BS 5486-12:1989 (withdrawn, replaced by BS EN 60439)	Low-voltage switchgear and control gear assemblies. Part 12 Specification for particular requirements of type-tested miniature circuit-breaker boards				x			x	x	x	
BS 5499-1:2002	Graphical symbols and signs. Part 1 Safety signs, including fire safety signs. Specification for geometric shapes, colours and layout				x				x	x	
BS 5499-3:1990	Fire safety signs, notices and graphic symbols. Part 3 Specification for internally-illuminated fire safety signs				x			x	x	x	
BS 5499-5:2002	Graphical symbols and signs. Safety signs, including fire safety signs. Part 5 Signs with specific safety meanings				x			x	x	x	
BS 5649-2:1978	Lighting columns. Part 2 Dimensions and tolerances			x					x	x	

Specification No.	Specification Title	Structures	Track	Roads	Power Distr.	Fare Collection	OLE	SC & C	Tramstops	Depot	Trams
BS 5649-5:1982	Lighting columns. Part 5 Specification for base compartments and cableways			x					x	x	
BS 5649-7:1985	Lighting columns. Part 7 Method for verification of structural design by calculation			x					x	x	
BS 5733:1995	Specification for general requirements for electrical accessories				x	x	x	x	x	x	
BS 5839-1:2002	Fire detection and alarm systems for buildings. Part 1 Code of practice for system design, installation, commissioning and maintenance				x				x	x	

Specification No.	Specification Title	Structures	Track	Roads	Power Distr.	Fare Collection	OLE	SC & C	Tramstops	Depot	Trams
BS 6004:2000 (equivalen european harmonisation document to be provided)	Electric cables. PVC insulated, non-armoured cables for voltages up to and including 450/750V, for electric power, lighting and internal wiring				x	(please provide equivalen european harmonisation document)x	x	x	x	x	

Specification No.	Specification Title	Structures	Track	Roads	Power Distr.	Fare Collection	OLE	SC & C	Tramstops	Depot	Trams
BS 6121-2:1989 (withdrawn, replaced by BS EN 50262)	Mechanical cable glands. Part 2 Specification for polymeric glands				(withdrawn, replaced by BS EN 50262)x	x	x(withdrawn; refer to "Power")	x	x	x	
BS 6133:1995	Code of practice for safe operation of lead-acid stationary batteries								x	x	
BS 6290-2:1999	Lead-acid stationary cells and batteries. Part 2 Specification for the high-performance Plant positive type								x	x	

Specification No.	Specification Title	Structures	Track	Roads	Power Distr.	Fare Collection	OLE	SC & C	Tramstops	Depot	Trams
BS 6290-4:1997	Lead-acid stationary cells and batteries. Part 4 Specification for classifying valve regulated types								x	x	

Specification No.	Specification Title	Structures	Track	Roads	Power Distr.	Fare Collection	OLE	SC & C	Tramstops	Depot	Trams
BS 6346:1997 (equivalent european harmonisation document to be provided)	600/1000V and 1900/3300V armoured electric cables having PVC insulation				x(please provide equivalen european harmonisation doc	x	x	x	x	x	

Specification No.	Specification Title	Structures	Track	Roads	Power Distr.	Fare Collection	OLE	SC & C	Tramstops	Depot	Trams
BS 6651:1999 (withdrawn, replaced by BS EN 62305)	Code of Practice for protection of structures against lightning	x			(withdrawn, replaced by BS EN 62305)x	x	x(withdrawn; refer to "Power")	x	x	x	
BS 6701:1994	Code of Practice for installation of apparatus intended for connection to certain telecommunication systems				x	x	x	x	x	x	

Specification No.	Specification Title	Structures	Track	Roads	Power Distr.	Fare Collection	OLE	SC & C	Tramstops	Depot	Trams
BS 6724:1997 (equivalent european harmonisation document to be provided)	600/1000V and 1900/3300V armoured electric cables having thermosetting insulation and low emission of smoke and corrosive gases when affected by fire				x	x	x	x	x	x	
BS 7001:1988	Interchangeability and safety of a standardized luminaire supporting coupler								x	x	
BS 7211:1998 (equivalent european harmonisation document to be provided)	Thermosetting insulated cables (non-armoured) for electric power and lighting with low emission of smoke and corrosive gases when affected by fire				x	x	x	(refer to "Power")x	x	x	

Specification No.	Specification Title	Structures	Track	Roads	Power Distr.	Fare Collection	OLE	SC & C	Tramstops	Depot	Trams
BS 7430:1998	Code of practice for earthing	x			x	x	x		x	x	
BS 7654:1997	Single phase street lighting fuses (cut-outs) for low-voltage public electricity distribution systems. 25A rating for highway power supplies and street furniture			x					x	x	
BS 7671:2001	Requirements for electrical installations. IEE Wiring Regulations. Sixteenth edition			x	x	x	x	x	x	x	
BS 7919:2001 (equivalent european harmonisation document to be provided)	Electric cables. Flexible cables rated up to 450/750V, for use with appliances and equipment intended for industrial and similar environments			x	x	x	x	x(refer to "Power")	x	x	

Specification No.	Specification Title	Structures	Track	Roads	Power Distr.	Fare Collection	OLE	SC & C	Tramstops	Depot	Trams
BS EN 12613:2001	Plastic warning devices for underground cables and pipelines with visual characteristics			x	x	x	x	x	x	x	
BS EN 40-1:1991	Lighting columns. Part 1 Definitions and terms			x					x	x	
BS EN 40-3-1:2000	Lighting columns. Part 3-1 Design and verification. Specification for characteristic loads			x					x	x	
BS EN 40-3-2:2000	Lighting columns. Part 3-2 Design and verification. Verification by testing			x					x	x	
BS EN 40-5:2002	Lighting columns. Part 5 Requirements for steel lighting columns			x					x	x	
BS EN 40-6:2002	Lighting columns. Part 6 Requirements for aluminium lighting columns			x					x	x	
BS EN 50085-1:1999	Cable trunking and cable ducting systems for electrical installations. Part 1 General requirements			x	x	x	x	x	x	x	

Specification No.	Specification Title	Structures	Track	Roads	Power Distr.	Fare Collection	OLE	SC & C	Tramstops	Depot	Trams
BS EN 50085-2-3:2001	Part 2-3 Particular requirements for slotted cable trunking systems intended for installation in cabinets				x	x	x	x	x	x	
BS EN 50086-2-1:1996	Conduit systems for cable management. Part 2-1, Particular requirements. Rigid conduit systems				x	x	x	x	x	x	
BS EN 50171:2001	Central power supply systems				x	x	x	x	x	x	
BS EN 50173-1:2002	Information technology. Generic cabling systems. General requirements and office areas				x	x	x	x	x	x	
BS EN 50174-1:2001	Information technology. Cabling installation. Part 1 Specification and quality assurance				x	x	x	x	x	x	
BS EN 50174-2:2001	Information technology. Cabling installation. Part 2 Installation planning and practices inside buildings				x	x	x	x	x	x	
BS EN 50262:1999	Metric cable glands for electrical installations				x	x	x	x	x	x	

Specification No.	Specification Title	Structures	Track	Roads	Power Distr.	Fare Collection	OLE	SC & C	Tramstops	Depot	Trams
BS EN 50310:2000	Application of equipotential bonding and earthing in buildings with information technology equipment				x	x	x	x	x	x	
BS EN 54-10:2002	Fire detection and fire alarm systems. Part 10 Flame detectors. Point detectors				X				x	x	
BS EN 54-11:2001	Fire detection and fire alarm systems. Part 11 Manual call points				X				x	x	
BS EN 54-1:1996	Fire detection and fire alarm systems. Part 1 Introduction				X				x	x	
BS EN 54-2:1998	Fire detection and fire alarm systems. Part 2 Control and indicating equipment				X				x	x	
BS EN 54-3:2001	Fire detection and fire alarm systems. Part 3 Fire alarm devices. Sounders				X				x	x	
BS EN 54-4:1998	Fire detection and fire alarm systems. Part 4 Power supply equipment				X				x	x	
BS EN 54-5:2001	Fire detection and fire alarm systems. Part 5 Heat detectors. Point detectors				X	x		x	x	x	

Specification No.	Specification Title	Structures	Track	Roads	Power Distr.	Fare Collection	OLE	SC & C	Tramstops	Depot	Trams
BS EN 54-7:2001	Fire detection and fire alarm systems. Part 7 Smoke detectors. Point detectors using scattered light, transmitted light or ionization				X				x	x	
BS EN 55015:2001	Limits and methods of measurement of radio disturbance characteristics of electrical lighting and similar equipment							x	x	x	
BS EN 60051-1:1999	Direct acting indicating analogue electrical measuring instruments and their accessories. Part 1 Definitions and general requirements common to all parts				x				x	x	
BS EN 60081:1998	Double-capped fluorescent lamps. Performance specifications				x				x	x	
BS EN 60188:2001	High-pressure mercury vapour lamps. Performance specifications								x	x	
BS EN 60269-1:1999	Low-voltage fuses. Part 1 General requirements				x	x	x	x	x	x	

Specification No.	Specification Title	Structures	Track	Roads	Power Distr.	Fare Collection	OLE	SC & C	Tramstops	Depot	Trams
BS EN 60400:2000	Lamp holders for tubular fluorescent lamps and starter holders				x				x	x	
BS EN 60432-2:2000	Safety specification for incandescent lamps. Part 2 Tungsten halogen lamps for domestic and similar general lighting purposes				x				x	x	
BS EN 60439-1:1999	Specification for low-voltage switchgear and control gear assemblies. Part 1 Type-tested and partially type-tested assemblies				x	x		x	x	x	
BS EN 60439-2:2000	Specification for low-voltage switchgear and control gear assemblies. Part 2 Particular requirements for busbar trunking systems (busways)				x	x		x	x	x	
BS EN 60439-3:1991	Part 3 Particular requirements for low-voltage switchgear and control gear assemblies for installation in places where unskilled persons have access to their use.				x	x		x	x	x	

Specification No.	Specification Title	Structures	Track	Roads	Power Distr.	Fare Collection	OLE	SC & C	Tramstops	Depot	Trams
BS EN 60439-4:1991	Part 4 Particular requirements for assemblies for construction sites (ACS)				x	x	x	x	x	x	
BS EN 60439-5:1996	Part 5 Particular requirements for assemblies intended to be installed outdoors in public places. Cable distribution cabinets (CDCs) for power distribution in networks				x	x	x	x	x	x	
BS EN 60454-1:1995	Pressure-sensitive adhesive tapes for electrical purposes. Part 1 General requirements				x	x	x	x	x	x	
BS EN 60529:1992	Degrees of protection provided by enclosures (IP code)				x	x	x	x	x	x	
BS EN 60598-1:2000	Luminaires. Part 1 General requirements and tests								x	x	
BS EN 60598-2-18:1994	Luminaires. Part 2-18. Particular requirements. Luminaires for swimming pools and similar applications								x	x	

Specification No.	Specification Title	Structures	Track	Roads	Power Distr.	Fare Collection	OLE	SC & C	Tramstops	Depot	Trams
BS EN 60598-2-22:1999	Luminaires. Part 2-22. Particular requirements. Luminaires for emergency lighting								x	x	
BS EN 60598-2-23:1997	Luminaires. Part 2-23. Particular requirements. Extra low voltage lighting systems for filament lamps								x	x	
BS EN 60598-2-2:1997	Luminaires. Part 2-2. Particular requirements. Recessed luminaires								x	x	
BS EN 60598-2-3:2003	Luminaires. Part 2-3. Particular requirements. Luminaires for road and street lighting			x					x	x	
BS EN 60598-2-5:1998	Luminaires. Part 2-5. Particular requirements. Floodlights								x	x	
BS EN 60896-2:1996	Stationary lead-acid batteries. General requirements and methods of test. Part 2 Valve regulated types								x	x	

Specification No.	Specification Title	Structures	Track	Roads	Power Distr.	Fare Collection	OLE	SC & C	Tramstops	Depot	Trams
BS EN 60898-1:2003	Circuit-breakers for overcurrent protection for household and similar installations. Part 1 Circuit-breakers for a.c. operation				x	x		x	x	x	
BS EN 60898-2:2001	Part 2 Circuit-breakers for a.c. and d.c. operation				x	x	x	x	x	x	x
BS EN 60921:1991	Ballasts for tubular fluorescent lamps. Performance requirements				x	x	x	x	x	x	
BS EN 60923:1996	Auxiliaries for lamps. Ballasts for discharge lamps (excluding tubular fluorescent lamps). Performance requirements				x	x	x	x	x	x	
BS EN 60925:1991	Performance requirements for d.c. supplied electronic ballasts for tubular fluorescent lamps				x	x	x	x	x	x	
BS EN 60927:1997	Auxiliaries for lamps. Starting devices (other than glow starters). Performance requirements				x	x	x	x	x	x	

Specification No.	Specification Title	Structures	Track	Roads	Power Distr.	Fare Collection	OLE	SC & C	Tramstops	Depot	Trams
BS EN 60929:1992	a.c. supplied electronic ballasts for tubular fluorescent lamps. Performance requirements				x	x	x	x	x	x	
BS EN 60947-2:2003	Low-voltage switchgear and control gear. Part 2, Circuit-breakers				x	x	x	x	x	x	
BS EN 60947-3:1999	Part 3, Switches, disconnectors, switch-disconnect TBA ors and fuse-combination units				x	x	x	x	x	x	
BS EN 60947-4-1:2001	Part 4-1, Contactors and motor-starters. Electromechanical contactors and motor-starters				x	x	x	x	x	x	
BS EN 61008-1:1995	Residual current operated circuit-breakers without integral overcurrent protection for household and similar uses (RCCBs). Part 1 General rules				x	x	x	x	x	x	
BS EN 61008-2-1:1995	Part 2-1 Applicability of the general rules to RCCBs functionally independent of line voltage				x	x	x	x	x	x	

Specification No.	Specification Title	Structures	Track	Roads	Power Distr.	Fare Collection	OLE	SC & C	Tramstops	Depot	Trams
BS EN 61009-1:1995	Residual current operated circuit-breakers with integral overcurrent protection for household and similar uses (RCBOs). Part 1 General rules				x	x	x	x	x	x	
BS EN 61009-2-1:1995	Part 2-1 Applicability of the general rules to RCBOs functionally independent of line voltage				x	x	x	x	x	x	
BS EN 61048:1993	Capacitors for use in tubular fluorescent and other discharge lamp circuits. General and safety requirements				x	x	x	x	x	x	
BS EN 61049:1993	Capacitors for use in tubular fluorescent and other discharge lamp circuits. Performance requirements				x	x	x	x	x	x	
BS EN 61347-2-1:2001	Lamp control gear. Part 2-1 Particular requirements for starting devices (other than glow starters)				x	x	x	x	x	x	
BS EN 61347-2-3:2001	Lamp control gear. Part 2-3 Particular requirements for a.c. supplied electronic ballasts for fluorescent lamps				x	x	x	x	x	x	

Specification No.	Specification Title	Structures	Track	Roads	Power Distr.	Fare Collection	OLE	SC & C	Tramstops	Depot	Trams
BS EN 61347-2-7:2001	Lamp control gear. Part 2-7 Particular requirements for d.c. supplied electronic ballasts for emergency lighting				x	x	x	x	x	x	
BS EN 61347-2-8:2001	Lamp control gear. Part 2-8 Particular requirements for ballasts for fluorescent lamps				x	x	x	x	x	x	
BS EN 61347-2-9:2001	Lamp control gear. Part 2-9 Particular requirements for ballasts for discharge lamps (excluding fluorescent lamps)				x	x	x	x	x	x	
BS EN 61537:2002	Cable tray systems and cable ladder systems for cable management				x	x	x	x	x	x	
BS EN 61558-1:1998	Safety of power transformers, power supply units and similar devices. Part 1 General requirements and tests				x	x	x	x	x	x	
BS EN 61558-2-9:2003	Part 2-9 Particular requirements for transformers for Class III handlamps for tungsten filament lamps				x	x	x	x	x	x	
BS EN 62035:2000	Discharge lamps (excluding fluorescent lamps). Safety specifications				x	x	x	x	x	x	

Specification No.	Specification Title	Structures	Track	Roads	Power Distr.	Fare Collection	OLE	SC & C	Tramstops	Depot	Trams
BS EN 62040-1-1:2003	Uninterruptible power systems (UPS). Part 1-1 General and safety requirements for UPS used in operator access areas				x	x	x	x	x	x	
BS EN 62040-1-2:2003	Uninterruptible power systems (UPS). Part 1-2 General and safety requirements for UPS used in restricted access locations				x	x	x	x	x	x	
BS IEC 1008-2-2:1990	Residual current operated circuit-breakers with integral overcurrent protection for household and similar uses (RCCBs). Part 2-2 Applicability of the general rules to RCCBs functionally dependent on line voltage				x	x	x	x	x	x	
BS 5489-1:2003	Code of Practice for the Design of Road Lighting				x	x	x	x	x	x	
GM/TT0146	Lighting of Railway Premises (Railway Group Standards)								x	x	
GI/RT7010	Lighting of Railway Premises (Railway Group Standards)								x	x	

Specification No.	Specification Title	Structures	Track	Roads	Power Distr.	Fare Collection	OLE	SC & C	Tramstops	Depot	Trams
GI/GN7607	Guidance for Low Voltage Electrical Installations (Railway group guidance notes)				x	x	x	x	x	x	
GI/RT7007	Low Voltage Electrical Installations (Railway Group Standards)				x	x	x	x	x	x	
GPGLRP3	Good Practice – Lighting for Railway Premises				x			x	x	x	
										x	
EN50121 Pts 1-5	Railway applications electromagnetic compatibility				x	x	x	x	x	x	
2004/40/EC	European directive				x			x		x	
EN50128: 2001	Railway Applications – Communications, signalling and processing systems – software for railway control and protection systems.				(not applicable)x			x		x	

Specification No.	Specification Title	Structures	Track	Roads	Power Distr.	Fare Collection	OLE	SC & C	Tramstops	Depot	Trams
ENV50129: 1998	Safety related electronic systems for signalling.				(not applicaqble)x			x		x	
IEC61508: 1998	Functional safety of electrical/electronic/programmable electronic safety related systems.							x		x	
	Methods for assessing the safety integrity of safety related software of uncertain pedigree (SOUP), Health and Safety Executive				(not applicable)x			x		x	
	Edinburgh Tram Earthing Systems Policy	x	x		x	x	x	x	x	x	

Specification No.	Specification Title	Structures	Track	Roads	Power Distr.	Fare Collection	OLE	SC & C	Tramstops	Depot	Trams
EN50128: 2001	Railway Applications – Communications, signalling and processing systems – software for railway control and protection systems.				(not applicable)x	x	x	x	x	x	
IEC61508: 1998	Functional safety of electrical/electronic/programmable electronic safety related systems.				(not applicable)x			x			
MPT 1331	Code of Practice for Radio Site Engineering							x			
MPT 1362	Code of Practice for installation of mobile radio equipment in land based vehicles							x			
MPT 1327	A Signalling Standard For Trunked Private Land Mobile Radio Systems (June 1997)							x			

Specification No.	Specification Title	Structures	Track	Roads	Power Distr.	Fare Collection	OLE	SC & C	Tramstops	Depot	Trams
G1/RT7015	Railway Group Standard (Feb 2003)					x					
BS EN50126	Railway applications- The specification and demonstration of Dependency, Reliability, Availability, Maintainability and Safety,		x		x	x	x	x	x	x	x
BS EN50149	Railway applications – Fixed installation-Copper and Copper alloy grooved contact wire,						x				
BS EN50119	Railway applications - Fixed installation-electric traction-Overhead Lines.						x				
BS EN50206-2 –	Pantographs for Light Rail vehicles						x				
BS EN50125-1	Railway applications - Fixed installations, Environmental conditions						x				
BS EN50317,	Railway applications - Fixed installations, Requirements for and validation of measurements of dynamic interaction between pantograph and contact line						x				

Specification No.	Specification Title	Structures	Track	Roads	Power Distr.	Fare Collection	OLE	SC & C	Tramstops	Depot	Trams
BS EN50151	Railway applications - Fixed installations, Special requirements for composite insulators						x				
BS EN50345	Railway applications - Fixed installations, Insulating synthetic rope assemblies for support of overhead contact lines						x				
BS EN50318	Railway applications - Fixed installations, validation of the simulation of dynamic interaction between pantograph and contact line						x				
BS EN 50122-1	Railway Applications – Fixed Installations Part 1: Protective provisions relating to electrical safety and earthing				x		x				
BS EN 50122-2	Railway Applications – Fixed Installations Part 2: Protective provisions against the effects of stray currents caused by d.c. traction systems				x						

Specification No.	Specification Title	Structures	Track	Roads	Power Distr.	Fare Collection	OLE	SC & C	Tramstops	Depot	Trams
BS EN 60146	Semiconductor convertors – General requirements and line commutated convertors				x						
BS EN 50123	Railway Installations – Fixed installations – d.c. switchgear				x						
IEC 850 (IEC 60850)	Supply voltages for traction systems										
BS 2618	British Standard Specification for Electrical Traction Equipment				(not applicable)x						
BS 6290	Batteries				x						
BS 7354	Battery Duty Calculations.				x						
CP 1013	Earthing.				x						
BRB Spec. DC 112	DC Power Cables.				x		x				

Specification No.	Specification Title	Structures	Track	Roads	Power Distr.	Fare Collection	OLE	SC & C	Tramstops	Depot	Trams
BS 6360 (IEC 60228)	Cable Conductors.				x		x				
BS 6899 Type GP2	DC Power Cable Insulation.				x		x				
IEC 228 (BS 6360)	Conductors for Multicores.				x		x				
DMRB	The United Kingdom Design Manual for Roads and Bridges (as amended by any City of Edinburgh Council -specific requirements)	x		x							
TSM	Traffic Signs Manual			x							
MCDHW	The Manual of Contract Documents for Highway Works;			x							
SHW	Specification for Highway Works;			x							
HCD	Highway Construction Details.			x							
CEC	'Edinburgh Standards for Streets'.			x							
NRSWA	New Roads and Street Works Act 1991			x							

Specification No.	Specification Title	Structures	Track	Roads	Power Distr.	Fare Collection	OLE	SC & C	Tramstops	Depot	Trams
CEC	Measures Necessary Where Apparatus is Affected by Major Works (Diversionary Works)			x							
CEC	Specification for the Reinstatement of Openings in Roads			x							
	Code of Practice for the Co-ordination of Street Work and Works for Road Purposes and Related Matters			x							
	Utility specific specifications (to be advised by each utility)			x							
RSPG Part 1, 1966	Railway Safety Principles and Guidance, Safety Principles	x	x	x	x	x	x	x	x	x	x
RSPG Part 2, Section G	2005, Railway Safety Principles and Guidance, Tramways	x	x	x	x	x	x	x	x	x	x
RVAR	Railway Vehicle Accessibility Regulations								x		x
GM/RC1500	1994-12, 2001-10 Code of Practice for EMC between the railway and its neighbourhood				x	x	x	x	x	x	x

Specification No.	Specification Title	Structures	Track	Roads	Power Distr.	Fare Collection	OLE	SC & C	Tramstops	Depot	Trams
EN55013	Sound and television broadcast receivers and associated equipment. Radio disturbance characteristics. Limits and methods of measurements.							x		x	x
GE/RT8015, 2002	Electromagnetic compatibility between railway infrastructure and trains.										x
ECE 43	1990-08, Uniform Provisions Concerning the Approval of Safety Glazing and Glazing Materials (Rev1 08.1990).								x	X	x
prEN13129-3	2003-10, Railway Applications – Air conditioning for urban and suburban rolling stock – Part 1: Comfort parameters										x
BS EN 779	2002-12-05, Particulate air filters for general ventilation - Determination of the filtration performance									x	x
BS 857	1967-06-30, Specification for safety glass for land transport										x

Specification No.	Specification Title	Structures	Track	Roads	Power Distr.	Fare Collection	OLE	SC & C	Tramstops	Depot	Trams
BS 6853 1999-01-15	Code of Practice for fire precautions in the design and construction of passenger carrying trains or European equivalent Standard										x
BS EN 50121-3-1 2000-12-15	Railway Applications - Electromagnetic compatibility - Rolling stock - Train and complete vehicle										x
BS EN 50125-1	Railway Applications – Environmental conditions for equipment										x
BS EN 50155-3-1 2000-12-15	Railway Applications – Electronic Equipment used on Rolling Stock										x
BS EN 50215 1999-09-15	Railway Applications - Testing of rolling stock after completion of construction and before entry into service										x
BS EN 60077-1 2002	Railway Applications – Electric Equipment for Rolling Stock										x

Specification No.	Specification Title	Structures	Track	Roads	Power Distr.	Fare Collection	OLE	SC & C	Tramstops	Depot	Trams
prEN ISO 3095 1975-09	Acoustics; Measurement of noise emitted by rail bound vehicles										x
prEN ISO 3381 1976-02	Acoustics; Measurement of noise inside rail bound vehicles										x
EN 12663-2000	Railway applications, Structural requirements of railway vehicle bodies										x
EN 13749-2005	Methods of specifying structural requirements of bogie frames										x
VDV 164 1995-04	System for fault detection, fault registration and fault message (FERM) on guided public transport vehicles										x
IEC 60494-2, 2002-08	Railway applications - Rolling stock; Pantographs; Characteristics and tests - Part 2: Pantographs for metros and light rail vehicles						x				x

Table 24 - Applicable Standards

9 Geotechnical

Where the Infraco Works may affect geotechnical and geo-environmental features, including but not limited to, aquifers, ground water and surface watercourses, the Infraco shall comply with the requirements of relevant third parties, the Scottish Environment Protection Agency (SEPA) or other statutory consultees and environmental legislation.

The Infraco shall agree the criteria and methods for the identification, classification, treatment and disposal of material with SEPA, the relevant local environmental health authority or other relevant authority as appropriate. The Infraco shall obtain all necessary consents for the removal, disposal or re-use of materials. Materials not suitable for re-use shall be transported off Site to a licensed facility in accordance with the requirements of the applicable relevant authority and environmental legislation.

The Infraco shall not carry out works or activities which would result in any Site or any land licensed to the Infraco under the Agreement or any adjacent or adjoining property being classified as contaminated land under the Environmental Protection Act 1990, the Contaminated Land (Scotland) Regulations 2000, the Contaminated Land (Scotland) Regulations 2005 and the guidance contained in the Scottish Executive Statutory Guidance for the the Contaminated Land Regime, Edition 2 dated May 2006 and/or any similar environmental legislation, or that would preclude such a classification being removed.

The Infraco shall assess the risk of the ingress of landfill gases, coalfield gases and other hazardous ground gases and implement appropriate measures to mitigate such risks.

The Infraco Works shall be designed and constructed to accommodate reasonably foreseeable changes in the existing and potential future nature and level of ground water, where reasonably practicable.

10 Environment

10.1 Environmental Considerations

10.1.1 General

Environmental Statements have been prepared for Line One and Line Two in accordance with the standing orders of the Scottish Parliament, which require that projects approved by private Act of Parliament must be subject to Environmental Impact Assessment (EIA). EIA in Scotland is governed by the Environmental Impact Assessment (Scotland) Regulations 1999 (S.I. 1999 No. 1). The Environmental Impact Assessments (EIAs) have been undertaken to identify the construction and operational effects of building and operating a tram network in Edinburgh. Each assessment has been documented in a comprehensive Environmental Statement which describes:

- The design of the project and the way it will be constructed and operated;
- Its impacts on the physical, natural and human environment; and
- The measures that will be undertaken to minimise these impacts.

The Environmental Statements report the assessment of the following environmental topics which should be considered by the Infraco:

- The proposed scheme – including an explanation of the need for the scheme, alternatives considered, route alignment and infrastructure description, construction and operational activities;
- Approach to the EIA – summarising the legal requirements, scope and methods used in undertaking this EIA;
- Policy context – provides a review of compliance of Line One and Line Two to relevant national, regional and local policies;
- Traffic and transport;
- Land use - including potential impacts to the agricultural use of land along the route;
- Geology, soils and contamination – including references to hydrogeology and waste management;

- Landscape and visual amenity;
- Ecology and nature conservation;
- Surface water – including water quality and hydrology;
- Heritage - including archaeology;
- Socio-economic effects;
- Noise and vibration;
- Air quality - including local air quality (PM10, NO2), global air quality (CO2) and dust; and
- Cumulative impacts.

The Infraco shall ensure that the environmental impact caused by the Infraco Works shall be no worse than that contained in the Environmental Statements.

10.1.2 Freedom of Access to Environmental Information

The attention of the Infraco is drawn to the requirements of the Environmental Information (Scotland) Regulations 2004 (SSI 2004/520). This Statute permits public access to environmental information held by a Scottish public authority.

10.1.3 Relevant Legislation, Regulations and Guidance

The following are a series of project specific documentation governing various aspects of the environmental considerations of the Edinburgh Tram Network design, construction and operation.

10.1.4 Code of Construction Practice

A code of construction practice was prepared in consultation with the City of Edinburgh Council (CEC), Scottish Natural Heritage (SNH), the Scottish Environmental Protection Agency (SEPA) and Historic Scotland, in order to define **tie's** minimum standards of construction practice. Compliance with this code is a legal requirement of the Edinburgh Tram (Line One) and (Line Two) Acts (2006) under Section 66 and this code has been developed by **tie** and this developed version is included in Schedule 3 (Code of Construction Practice and Code of Maintenance Practice).

The Code of Construction Practice sets out policies, legislation and guidance relating to the impact of the proposed construction works on the environment and the amenity and safety of residents, businesses, the general public and the physical surroundings adjacent to the ETN. The Code of Construction Practice also provides a list of environmental protection measures to be implemented during the construction of the ETN.

10.1.5 tie's Noise and Vibration Policy

tie's Noise and Vibration Policy (NVP/001 V1.01) sets out the mitigation approach for noise and vibration impacts during the operation of the Tram in Edinburgh. Mitigation requirements relating to noise and vibration impacts during the construction of the ETN route are outlined in the Code of Construction Practice. Compliance with the Noise and Vibration Policy is a legal requirement under Section 66 of the Edinburgh Tram (Line One) and (Line Two) Acts (2006). Other legal requirements relating to noise insulation are set out in Sections 63, 64 and 65 of the respective Acts. The Noise and Vibration Policy is included in Schedule 32 (**tie** and CEC Policies).

10.1.6 The Tram Design Manual and Urban Design Briefs

A Design Manual and urban design briefs have been prepared for the ETN. Both sets are regarded as supplemental guides to deemed consent for Line One and Line Two under the section 11 (Class 29) of the General Permitted Development (Scotland) Order 1992.

Although permitted development status exists for the ETN it is nonetheless necessary to gain prior approval from the City of Edinburgh Council before the Infraco Works can commence. The Design Manual and urban design briefs are both designed as guides in informing both the design process and the prior approval process. It is therefore important that the Infraco gives appropriate consideration to the contents of the Design Manual and the briefs as major component in the integration of a tram design into the urban fabric of the City.

10.1.7 Landscape and Habitat Management Plan

The Landscape and Habitat Management Plan (LHMP) details the proposals for retention, protection and enhancement of existing planting and habitats, within the Roseburn Corridor. It also sets out details of replacement planting and habitat which are lost as a consequence of the development. The plan will be updated by the Infraco as new information on habitat, landscape proposals and Tram design becomes available. The plan will also include proposals for noise mitigation for properties adjacent to the ETN. Revisions to the LHMP will require to be approved by the City of Edinburgh Council Planning Authority. The procedure for updating the LHMP is set out within Section 68 of the Edinburgh Tram (Line One) Act (2006).

10.1.8 Badger Mitigation Plan

The Badger Mitigation Plan sets out the scope and form of the proposed mitigation measures for avoiding/ reducing adverse impacts on badgers within the Roseburn Corridor. The Plan will be updated by the Infraco as new information on badger social groups and the ETN design becomes available. Revisions to this Plan will be agreed with SNH, CEC and the Edinburgh and Lothians Badger Group (ELBG) and approved by the CEC Planning Authority.

In preparing the detailed environmental design and implementation (including maintenance and monitoring periods) proposals for landscape and ecology the Infraco will ensure that all commitments given in the Environmental Statement and arising from the Scottish parliamentary process relating to the Tram Legislation (including the detailed agreements following discussions with stakeholders) are met.

10.1.9 Protected Species Plan

The Protected Species Plan identifies the constraints governing how all protected species (predominantly located in the Gogarburn area) are to be dealt with.

10.1.10 Archaeological Requirements

All Infraco Works are to be carried out in compliance with the approved AHMP relevant to that location.

10.1.11 Landscape Design

The landscape design shall include, for construction, aftercare and maintenance / monitoring, ongoing for the whole Term. The detailed landscape design shall be in accordance with the environmental objectives, principles and requirements given in the Environmental Statements, to ensure that the Edinburgh Tram Network as constructed and operated is in compliance with the Environmental Statements, and any subsequent side agreements entered into between the CEC, **tie** and various third parties.

10.2 Ecological Design

The ecological design shall include, for construction, aftercare maintenance and monitoring:, the ecological mitigation proposals will cover the wholeTerm.

The ecological design shall be in accordance with the environmental objectives, principles and requirements given in the Environmental Statements, to ensure that the Edinburgh Tram Network as constructed and operated is in compliance with the Environmental Statements prepared for Parliament, and any subsequent side agreements entered into between the CEC, **tie** and various third parties (e.g. Scottish Natural Heritage, New Ingliston Limited, Edinburgh and Lothian Badger Group).

The updated and ongoing ecological surveys and mitigation works to be carried out by Infraco shall take into account seasonal constraints and variations and will accommodate ongoing relevant surveys begun by other parties (e.g. biological water quality monitoring). The Infraco shall ensure that the construction, maintenance and monitoring of the Infraco Works complies with all existing UK and EU Environmental legislation concerned with the protection of species and habitats including but not limited to:

- Wildlife and Countryside Act 1981 (as amended in particular by Variation of Schedules 1988, 1992 & 1998);
- The Conservation (Natural Habitats, & c.) Regulations 1994 (as amended);
- Protection of Badgers Act 1992; and
- Countryside and Rights of Way Act 2000 in so far as it extends to Scotland.

The Infraco shall not commence works within any part of the Site until the necessary update surveys of ecological interest in respect of that part of the Site have been undertaken and a survey report has been submitted to **tie**. Any relevant findings of such surveys shall be included into the Infraco's Landscape and Habitat Management Plan and the Construction Environmental Management Plan (CEMP).

The Infraco shall ensure that:

- Details of all species protected by Law and any structure or place used for shelter or protection by any such species protected by Law within the Site are kept confidential and not disclosed to any person except insofar as is essential for carrying out the Infraco Works; and

- All necessary current licenses, and named license holders, are available before the commencement of any Infraco Works, which may affect species protected by Law and or any structure or place used for shelter or protection by any such species protected by Law.

In the event that the Infraco identifies or becomes aware of any species protected by Law, or any structure or place used for shelter or protection by any species also protected by Law, which could be directly or indirectly affected by the Infraco Works and for which appropriate protection measures have not previously been agreed, the Infraco shall notify **tie** immediately and shall:

- Cease all Infraco Works that may adversely affect such species, structure or place;

- Provide Scottish Natural Heritage and **tie** with any further information of which the Infraco is aware relating to such species, structure or place as may be requested;

- Consult upon and agree mitigation and/or monitoring measures with Scottish Natural Heritage and **tie** in relation to such species, structure or place; and

- Obtain any necessary licenses to carry out the agreed measures.

The Infraco shall ensure that all construction work is carried out with due regard to the seasonal interests of any flora, fauna or habitat and in particular, all species listed for any degree of protection under Law. The Infraco shall make due allowance for the seasonal constraints in preparing the Programme.

10.3 Construction of Ecological Measures

10.3.1 General

Special ecological measures shall include but not be limited to the requirements for carrying out the Infraco Works:

- fencing;
- safe passage for wildlife;
- the location of nesting or roosting boxes;
- the location of habitat creation measures to be inspected;
- the known location of protected species, and
- the list of licenses obtained or required for working with or within the vicinity of Protected Species; and
- maintaining access to foraging and water.

10.3.2 Site Supervision of Landscape and Ecological Works

The Infraco shall ensure that the environmental Site works shall be inspected and monitored by Infraco's environmental clerk of works who will be supported by Infraco's landscape architect and ecologist, as necessary.

10.3.3 Landscape Works

Planting, seeding and aftercare works shall be carried out by the Infraco.

The Infraco will be responsible for locating all services routes prior to any landscape work being carried out.

10.3.4 Completion of the Planting Works and Completion of the Landscape and Ecological Aftercare Works

On practical completion of the landscape and ecological implementation works and on completion of the three years landscape and ecological aftercare works. The Infraco shall submit the required certificates and arrange a formal inspection of the Infraco Works with **tie**.

A separate inspection shall be arranged with relevant landowners for any areas of off-site planting.

10.3.5 Construction Environmental Management Plan (CEMP)

The Infraco shall prepare a Construction Environmental Management Plan (CEMP) including specific management / action plans or Method Statements, as necessary, to convey the required level of information for the following:

- Drainage features, including oil interceptors and pollution control valves, treatment of run-off, (including run-off volumes) and the location and appearance of any balancing ponds and/or swales, access or proposed access to the same;
- Carriageway surfacing;
- Working times;
- Noise reduction and abatement;
- Pollution control and contingency plan (see below);
- Discharge, land drainage and abstraction licenses to comply with EA requirements;
- Protection of retained vegetation;
- Maintenance e.g. de-icing;
- Sourcing of construction materials;

- Waste disposal, including disposal of construction waste, arisings, spoil, miscellaneous solids and liquids;
- Topsoil and subsoil handling (strip, storage, amelioration and re-use);
- Management and disposal of any excess soil or spoil arising from the works; and
- Site compounds.

The specific requirements of the pollution control and contingency plan are as follows:

- Compliance with the SEPA pollution prevention guidance;
- Identification and categorisation of surface waters vulnerable to Site works and an assessment of the earthworks that are likely to give rise to silty run off, the routes this is likely to take and the methods to prevent damage from silt;
- Precautions for handling of fuel, oil and other liquids during the works, in particular, near rivers, streams and watercourses;
- Requirements for pollution control equipment;
- How mud and dust will be controlled;
- How water supply boreholes and wells will be protected;
- The measures to be taken to protect watercourses and associated wildlife from, for example, chemical spillages or the introduction of sediment-laden run off; and
- Discharge criteria for suspended solids in run off from the Site during construction and proposals for monitoring and control.

11 Surveys

Surveys and investigations shall be undertaken by the Infraco as required to facilitate the design, construction and maintenance of the Edinburgh Tram Network.

Before commencing any Infraco Works (including investigations) where either the Infraco or **tie** considers there to be potential for a future claim from adjacent property owners or occupiers, the Infraco shall carry out a detailed condition inspection of the relevant properties and infrastructure which may be affected by the Infraco Works. If any such inspection is carried out, this shall be done in conjunction with the owners or occupiers concerned. A condition survey report shall then be prepared and agreed with the owner or occupier.

Condition survey reports prepared under the preceding paragraph shall include photographic evidence of the existing condition of the relevant property or infrastructure including evidence of critical dimensions such as existing crack widths.

The Infraco shall undertake sufficient surveys to prepare a topographical survey model. Relevant sections of the topographical survey model shall be updated by the Infraco at least every six months throughout the period of the Infraco Works, where work has been undertaken in relation to the sections concerned.

The topographical survey model shall include all Works as constructed and the Infraco shall include in each updated topographical survey model all then existing fixtures including:

- principal cabling;
- street furniture;
- structures and buildings;
- trackwork;
- drainage;
- power supply systems including OLE structures;
- ducting and draw pits.

These surveys shall include aspects concerned with:

- dimensions
- condition; and
- inspection for assessment.

The Infraco shall update the photographic records (excluding aerial photographs) and other such data contained in the topographical survey model at intervals of not less than six months.

The Infraco shall provide access to and copies of, when requested, all reports of investigations carried out as part of the Infraco Works.

12 Project Management Processes

12.1 Communication – General

The Infraco shall develop and maintain a "Communications Plan" and this shall be submitted to **tie** in accordance with the Review Procedure.

The Communications Plan shall illustrate how all the communication processes, activities and issues are to be managed, progressed and satisfactorily resolved. The Communications Plan shall detail how the Infraco will communicate with Sub-Contractors, the Operator, **tie**, the MUDFA Contractor, key stakeholders and third parties. The Communications Plan shall also include the intended processes for dealing with enquiries, particularly complaints, from all sources. The Infraco shall refer to the Stakeholder Services in this Section of the Employer's Requirements, in order to ensure that the Communications Plan includes all necessary requirements.

The Infraco shall implement all the requirements of the Communications Plan.

The Infraco shall liaise with the relevant parties to ensure that the Infraco is copied into all relevant communications that are generated by others, in order to ensure that any relevant construction related issues, such as Temporary Works and practical constraints, are identified and addressed.

12.1.1 Meetings

The Infraco shall work with **tie** to develop the meetings schedules and requirements for progress reporting throughout the duration of the Infraco Works. The following table provides an outline of the minimum requirements:

Meetings	Frequency	Chaired by / Minutes taken
Safety Meeting	Weekly	Infraco
Management Review Meetings	Two monthly	**tie**/Infraco alternately
Project Progress Meetings	Four weekly (Fortnightly prior to Site start)	**tie**

Meetings	Frequency	Chaired by / Minutes taken
Design and Planning Meetings	Fortnightly	Infraco
Stakeholder & Third Party Meetings	As required	**tie**
Site Meetings	Weekly	Infraco
Cost Review Meetings	Four weekly	**tie**
Risk Review Meetings	Four weekly	**tie**

Table 25 - Table showing meeting schedules

The primary purpose of these meetings shall be to enable the Infraco to advise on:

- Any safety issues;
- The current state of the programmed Infraco Works;
- Progress made in the various activities;
- Communication issues;
- Third party issues; and
- Commercial issues (Including change control).

The Infraco shall develop and maintain a comprehensive meetings schedule indicating those meetings which the Infraco shall chair and those meetings which the Infraco shall attend.

Prior to commencement on Site, progress meetings shall be held every two weeks. The purpose of these meetings shall be to review progress made by both Parties, and identify and agree actions required.

The Infraco shall provide an agenda, for all meetings to which they are designated as chair. The Infraco shall also provide appropriate documentation in advance of each of the meetings, as defined in the following sections, or otherwise as agreed with **tie**.

12.1.2 Progress Reporting

Progress reports shall be submitted by the Infraco to **tie** no later than three Business Days before each progress meeting.

The Infraco's progress reports shall contain comprehensive information and shall be structured in a manner which is commensurate with **tie**'s own reporting structure. The various sections of the progress reports shall require to be agreed with **tie**, but should include the following:

1. Executive Summary;
2. Health & Safety Report;
3. Quality & Environment;
4. Financial Summary Report; and
5. Project Performance / Programme.

Information provided within the progress reports shall include, but not be limited to, the following:

- Health & safety report including a summary of H&S records
- Summary financial information summarised from the separate cost report including summary and headline data on planned spend/actual spend, forecast spend and summary of costs for Compensation Events and future forecast.
- Planned versus actual resource summary;
- Physical progress against Milestones anticipated/required completion dates;

- Four weekly forecast of all activities;
- Eight weekly critical impact notice (including all information on any internal or external factor which may affect programme delivery);
- Labour histograms detailing planned, actual and forecast across all disciplines;
- The activities commenced or completed since the previous report and upon what dates;
- The expected remaining duration of all activities commenced but not completed;
- Any other additional activities with expected durations, methods, and resource requirements and sequence assumptions;
- Schedule and programme for the delivery of method statements, permits and isolations for the next four weeks;
- Any changes to expected durations, method, resource requirements and sequence assumptions;
- Forecast completion dates for all Infraco Works in each geographical section and intermediate geographical section including any slippage or advance upon the Planned Service Commencement Date and/or the Planned Sectional Completion Dates (as appropriate);
- Programme comparison between actual vs. planned;
- Schedule of information received;
- Schedule of outstanding information;
- Progress photographs;
- Top 10 opportunities; and
- Top 10 risks.

12.1.3 Progress Photos

The Infraco shall on a monthly basis throughout the period until the Service Commencement Date procure that photographs covering all of the Infraco Works are taken by a professional photographer whose appointment the Project shall be approved by **tie**, such approval not to be unreasonably withheld or delayed.

tie shall determine the scope of the photographs referred above.

The Infraco shall ensure that:

- A minimum of 50 digital colour photographs shall be taken on a monthly basis;
- All photos shall be provided in electronic format in a form to be agreed with **tie**;
- One set of 10 inch x 8 inch size prints shall be prepared from the colour photographs referred to above;
- All prints referred to above shall be presented in albums with individual clear plastic wallets and marked on the reverse side with the date that the photograph was taken, the name and address of the photographer, identification reference number and a brief description of Work being undertaken and the direction from which the photograph was taken;
- All prints and negatives shall be delivered to **tie** within two weeks of being taken; and
- Except where **tie** have provided their prior written consent, the photographs shall not be used for any purpose other than as set out in the Agreement.

The Infraco shall procure that all Intellectual Property in respect of the photographs vests in **tie**.

12.1.4 Site Meeting Report

A report shall be submitted by the Infraco to **tie** no later than one Business Day before each site meeting. The report shall include reference to any significant issues (associated with safety, programme, design, cost, planning and consultee aspects), which have arisen since the previous monthly progress report.

The site meeting report shall also identify actual manpower resources (labour returns), plant and equipment that have occurred on site, for the previous week.

12.1.5 Topic Register

It is **tie**'s intention to continue to develop and maintain a "Topics Register" for the Infraco Works. The Topics Register is used to record all issues as they arise that require to be specifically addressed. The record is then amended as appropriate to track the manner in which issues have been progressed or resolved to the satisfaction of **tie**. The Infraco is required to add to, or respond to issues as appropriate and attend regular review meetings at which the Topics Register shall be updated and actions assigned by **tie**.

The Infraco shall participate in the management of the Topics Register.

12.1.6 Work Breakdown Structure

An agreed Work Breakdown Structure is included in the Introduction of these Employer's Requirements. The Infraco shall adopt this WBS to ensure a recognised, structured analysis, by all parties, when interrogating the programme and cost analysis. The WBS may be further developed by the Infraco with the written consent of **tie**.

Accordingly there shall be a requirement for the Infraco to adopt all aspects of the WBS in the development of programme and cost documentation.

12.2 Programme Management

The Infraco shall undertake programme management including the implementation, regular updating and management of a fully detailed comprehensive Programme illustrating how the Infraco proposes to execute the whole of the Infraco Works in compliance with the Project Programme.

This Infraco Programme shall be prepared using Primavera software in a version compatible with that of **tie**.

This Programme shall be in Primavera P3e (Version 6 or otherwise as agreed with **tie**) format and accompanied by a time chainage programme illustrating the same information. The Programme shall be cost and resource loaded and coded to reflect the Infraco's WBS activities as detailed in section 39 of these Employer's Requirements.

The Infraco shall be responsible for liaising directly with **tie**, CEC (and other appropriate third parties) to maximise delivery of the ETN but minimise disruption to public transport and other services, and ensuring that any necessary diversion routes are agreed in recognised time periods prior to the commencement of Infraco works. The Infraco shall also take note of the constraints as identified in 39 of these Employer's Requirements.

The Programme shall be submitted to **tie** in accordance with the Review Procedure within a period which shall ensure that the Infraco Works can be progressed and monitored by the Infraco and **tie** against the details contained therein. The Programme shall clearly identify the following:

- the commencement, construction and completion constraints for all elements of the Infraco Works, separated into sectors by WBS code;
- all Milestones;
- the constraints, procedures, documentation and approvals specified in the Agreement;
- the Infraco manufacture and construction execution strategy, Infraco Works and site testing and commissioning, all constraints, procedures, documentation and approvals periods;
- seasonal constraints and constraints applied by CEC and other third party and statutory bodies as defined in the Agreement;
- the required design approvals and notices;
- all works to be undertaken by any Sub-Contractor;
- sufficient detail to illustrate the integration of the Deliverables with the proposed dates of possessions and the commencement and completion of construction for all elements of the Infraco Works, by WBS code;
- all other projects affecting the Infraco Works and how they are integrated into the Infraco Works. For example, any street works to be carried out by CEC, and works by or on behalf of all third parties (including landowners and developers);

- any witnessing, inspections, testing etc of the Infraco Works which requires to be carried out by third parties;
- long lead time materials and works;
- the identification and duration of all advance works, other than those already underway;
- the requirements and approval periods for traffic management, TROs, TTROs, and including any third party's requirements for notices and road closures;
- the commencement, completion dates and relationships of intermediate geographical section of the Infraco Works within each geographical section of the Infraco Works;
- the links and relationships between all activities and the justification of the underpinning logic;
- all design, manufacture and construction periods;
- the identification and timing of inputs and approvals required from **tie**, third parties, and any Approval Bodies are clearly identified; and
- the interface and relationship with the MUDFA Works;

The Programme shall meet the following minimum requirements:

- shall be in Primavera P3e (Version 6) for detailed implementation;
- shall follow and fully reflect the **tie**'s Work Breakdown Structure ("WBS") included within these Employer's Requirements.
- shall be cost and resource loaded down to coded activities;
- all resource reporting and progress reporting shall be coded to suit the activities contained within the WBS;
- records of time spent against activities shall be completed weekly against planned works as generated by Primavera;

- Any deviations shall be reported in the progress report and include notification of remedial actions for authorisation by **tie**;
- weekly records shall be collated and delivered to **tie** by 09:00hrs on the Tuesday following the week to which the records relate;
- the Programme shall also take into account programming input and attendance at meetings, both as required by **tie**; and
- the Programme shall also contain cost/spend tables and cumulative curves to match the achievement of major milestones and activities within the WBS.

The Infraco shall take into account the availability of alternative materials or components when developing the Programme. The Infraco shall identify those materials and components which require advance ordering and processing. Any advanced orders which are approved shall be identified and defined in the Programme.

The Infraco shall update the Programme every four weeks in line with **tie** reporting periods to take full account of the Infraco progress in completing the Infraco Works.

A hard and soft copy updated Programme and an Infraco Progress Report shall be submitted by the Infraco to **tie** no later than three Business Days before each four weekly progress meeting.

12.3 Time Chainage

The Infraco shall also produce, manage, develop and work in accordance with its Time Chainage Diagram.

The Time Chainage Diagram shall be submitted to **tie** in accordance with the Review Procedure to ensure that the Infraco Works can be progressed and monitored by the Infraco against the details contained therein but in any case, the Time Chainage Diagram shall be submitted not later than six weeks after the Commencement Date. The Time Chainage Diagram shall be updated regularly and be available for inspection or distribution on a monthly basis, during the course of the Infraco Works.

The Time Chainage Diagram shall fully reflect, accommodate and comply with the information detailed on the Programme.

12.4 Planning and Other Consents

The responsibility for the Consents is as set out in Clause 19 of the Agreement.

12.5 Project Management Plan

12.5.1 General

The Infraco shall submit and maintain a plan describing the approach to project management for the delivery of the complete scope of the Infraco Works. This project management plan shall include sections to clearly and separately describe the approach to the specific topics set out below.

12.5.2 Resource and Competence

A description of the procedures employed to ensure that the required resource and competence level throughout the duration of the Infraco Works shall be achieved.

12.5.3 Documentation

Identify key policies and procedures to deliver such works, infrastructure and equipment to programme, specification, budget and otherwise safely and efficiently and in a manner which is fully integrated with the activities of other relevant contractors.

The approach to the development of a suite of project specific documentation, indicating how they shall effectively be integrated with, and reflect, the Infraco's corporate procedures and policies (including any Joint venture or consortia procedures).

Templates that shall be used for the procurement and delivery of the service deliverables, which shall be required to be prepared by the Infraco.

Outline proposals covering the suite of required documentation including training, maintenance and operations manuals, as-built drawings, design Information, testing procedures and proposals, and certification and records (e.g. testing).

12.5.4 Regulations

Management arrangements and procedures for ensuring/monitoring compliance with all applicable Regulations (e.g. HMRI), Law, and the requirements of the Agreement and its Schedules.

12.5.5 Procedures

Details of internal procedures for decision making and review in your management team with particular emphasis on safety, programme, budget, quality, the management and control of non-compliance and the implementation of continuous improvement.

12.5.6 Proposals on reporting and controlling design information requirements

Procedures which shall be followed in obtaining outstanding consents and approvals for the works.

Definition of the process for managing the approvals interface with **tie**, HMRI, Planning Authority, Roads Authority, Network Rail, the Operator and third parties with whom agreements have been entered into.

12.5.7 Interface Plans

Given that successful co-operation between the Operator, Infraco, and **tie** is essential to the delivery of a successful project, a description of the key areas of this interface and details which demonstrate how this is successfully achieved.

Details of supply chain process/procedures, in particular provide details of the criteria for selection of sub-contractors/suppliers for this project.

Details of how the Tram Provider shall be managed.

Details regarding the commissioning and handover of the Edinburgh Tram Network or Geographical Sections thereof to the Operator shall be provided.

12.5.8 Design

Clear definition of the areas where the Infraco shall undertake design work and an explanation of where the Infraco believes this deviates from the previous design work done.

12.6 Construction Management Plan

The Infraco shall submit and maintain a Construction Plan relating to the Programme. This Construction Plan shall include sections to clearly and separately describe the approach to the specific topics set out below.

12.6.1 Mobilisation

Detailed mobilisation plan, to incorporate comprehensive details of all aspects of mobilisation including, but not limited to, number of work sites, the facilities on each, a general arrangement drawing of main sites, lay down areas, materials storage, welfare and car parking. This should detail timescales and immediate resource availability and should also provide details of the permissions required and assumptions made.

12.6.2 Plant

A description of the plant that will be used for the construction of the project and of how long the plant will be used. This should include description in relation to plant used for specialist purposes such as rail laying or wire stringing (these should be separately identified).

12.6.3 Sub-Contractors

Details of the sub-contractor management and control process during the construction phase, including how the performance of sub-contractors will be measured and reviewed and how sub-contractor compliance with standards will be assured.

12.6.4 Method Statements

A description of the process by which method statements shall be developed and approved, and a schedule summarising those method statements that are anticipated. An initial schedule shall be submitted in accordance with the Review Procedure and this shall be updated from time to time with agreement from **tie**.

12.6.5 Avoidance of Disruption

Description of the management process for ensuring that traffic disruption is kept to a minimum, particularly in relation to Traffic Management and TTRO requirements. Details of procedures of how unforeseen works (that are out with the area covered by the Temporary Traffic Restriction Order, but are necessary to complete the Infraco Works within the TTRO area) shall be dealt with.

Proposals for maintaining reasonable access to premises at all times and what measures The Infraco might employ when access is denied taking into account the requirements of the Disability Discrimination Act 1995.

Details of how it is proposed to liaise with all potentially affected third parties, and an assessment of the likely identities of such parties.

12.7 Network Rail Interface Plan

The Infraco shall submit and maintain a plan describing the approach to managing the ongoing interface requirements with Network Rail. The plan should identify the critical activities and the key risks associated with this interface and proposals to mitigate these risks. Notwithstanding the Infraco's responsibility of complying with the Agreement (including compliance with the Third Party Agreement and the Asset Protection Agreement) the Plan should address the following issues.

- A description of procedures for gaining access to Network Rail's infrastructure both in terms of the approval process and the physical access proposals;
- Confirmation, in terms of safety and in terms of undertaking the Infraco Works, the personnel utilised shall be appropriately qualified, skilled, experienced and adequate in quantity;
- The proposed Possession Strategy for works on or adjacent to Network Rail infrastructure, to include identification of Possessions & Isolations on Programme taking cognisance of lead time;
- Summary of the required method statements for principal construction activities associated with Works adjacent to Network Rail infrastructure;
- The proposals which allow access for Network Rail to maintain their infrastructure;
- Details as to how the Railway Group & Network Rail Line standards shall be complied with;
- Specific details of how Network Rail's infrastructure and rail vehicles shall be protected from injury/damage arising from the works activities;
- Details of how staff and any third parties shall be protected from injury from Network Rail's infrastructure or vehicles using it;
- The strategy for Red & Green Zone working;

- Proposals for competencies, making specific reference to management of the certification of personnel and operatives in accordance with the National Competency Control Agency "Sentinel" systems and procedures;

- A specific accident/incident procedure with regard to Network Rail infrastructure which details action to be taken, including the communications regime;

- Proposals for security and prevention of trespass onto site, especially onto adjacent Network Rail property;

- Proposals with regard to work in and around First Scotrail's Haymarket Depot and its associated stabling & sidings. There shall be a requirement to highlight proposals for ensuring access to Haymarket Depot is maintained for staff; road and rail vehicles, especially if rail vehicles require access/egress to the depot by road. There shall be a requirement to identify how First ScotRail operations shall not be restricted.

12.8 Quality Management

The Infraco shall undertake the Works fully in compliance with quality management processes and procedures referenced in ISO 9001 and ISO 9004.

The Infraco shall develop and maintain a Quality Plan to meet the requirements of ISO 10005 - 1995, and which fully defines all quality aspects of the Works. The Quality Plan shall be submitted in accordance with the Review Procedure. The Quality Plan shall demonstrate an integrated quality management system relating to the design, construction, testing and commissioning of the system and shall show how Infraco and its Sub-Contractors shall comply with the requirements of the Quality Plan.

The Infraco shall have all associated documentation readily available for internal review and review by **tie**. Regular internal audits shall be undertaken by the Infraco to ensure full compliance with ISO 9001 and ISO 9004 in accordance with Clause 5.1 of the Code of Construction Practice. The Infraco shall prepare and submit in accordance with the Review Procedure a "Schedule of Internal Audits" for agreement with **tie**. This shall define the planned nature and timing of the internal audits. Furthermore **tie** reserve the right to undertake external audits in accordance with paragraph 5.2 of the Code of Construction Practice and Code of Maintenance Practice.

The Infraco shall ensure that their management system for the Infraco Works is developed to ensure that it aligns with the requirements of the Tram Project Quality policy Statement (DEL.HSQE.103).

Quality control including materials and works on Site shall also be undertaken in accordance with the requirements of paragraph 3.2 of the Code of Construction Practice. The Infraco shall be required to comply with these Employer's Requirements including the completion of forms and other systems in order to assist **tie** in complying with **tie**'s own safety and quality management systems.

12.8.1 Document Standards and Control

All Deliverables that are shared with, or issued to, **tie** shall be posted and reside within **tie**'s document management system. The official version of any project document shall be the version that exists within **tie**'s document management system. Access shall be granted to **tie**'s document management system on a named basis, and access levels shall be determined by **tie**. The Infraco also agrees to abide by **tie**'s document management procedure as notified to Infraco from time-to-time.

Documents from external parties should be uploaded to the project extranet for processing by document control. The extranet will also be the official conduit for issuing project information. In exceptional circumstances where documents must be exchanged by email, only the Document Control team will receive and issue this information. They will then handle all appropriate processing and distribution.

Deliverables shall conform to the following standards:

Acceptable File Types

- MS Office Suite 2003;
- MS Project 2003;
- MS Visio 2003;
- Portable Document Format (PDF) – Fully-searchable (OCR) Acrobat Reader v7 compatible;
- Compressed Files/Folders – WinZip v10 compatible;
- Graphics – GIF, TIFF, JPG, JPEG, or BMP;
- Audio – Audio files should be saved in MP3 format;
- Video – WMV or MPEG format with WMV preferred;

- Drawings – DWG (inclusive of used templates) and DCF.

Acceptable File Sizes

In general, all files should be optimised to keep their size to a minimum. For email correspondence the maximum allowable attachment size is 10MB. Individual files in excess of 50MB are only acceptable with prior agreement from **tie**.

Project Applications

- Collaboration – SharePoint 2007 (hosted by **tie**);
- Project Planning – Primavera v6;
- Risk Management – Active Risk Manager (hosted by **tie**);
- Deliverables. In addition to Deliverables conforming to the above, they should specifically be supplied in complete, self-contained and fully editable formats.

Typical examples include;

- Drawing Deliverables should be supplied as complete DWG files (inclusive of used templates) as well as the DCF print snapshot;
- Documents should be in Word 2003 (or previous) format;
- Spreadsheets should be in Excel 2003 (or previous) format and include the associated macros, equations, and functions.

Illegal Characters

As a matter of best practice the following characters should not be used in filenames to minimise the risk of error in software applications:

&	**¦**	**$**
~	**¬**	**£**
*****	**^**	**?**
%	**; (semi-colon)**	**!**
#	**, (comma)**	**@**
****	**‘ (apostrophe)**	**=**
/	**` (single quote)**	
<	**“**	
>	**. (dot)**	
{	**: (colon)**	
}		

12.9 Infraco Performance Measurement

As part of the overall project reporting regime, a four weekly report incorporating performance against Key Performance Indicators (KPI) shall be required from the Infraco. These shall be project, as opposed to company, specific.

A fundamental consideration is that the KPIs agreed must be measurable and without dispute, thus they shall be fact based. The outputs shall be compared on a four weekly basis against both four weekly and rolling targets. A colour coded "traffic light" visual warning shall be used.

The KPIs agreed are split into a number of different areas. The following provides the breakdown of components within each of the areas. Deductions against the failure to achieve the agreed KPIs are set out in Schedule 45.

Table 26 – Table showing indication of Safety KPIs

Safety
Accident Frequency Rate (AFR)
Equivalent Fatality Rate (EFR)
Lost Time Accidents (LTA)
RIDDOR
Road Traffic Injuries
Road Traffic Damage (caused by Infraco actions)
Accident Investigations (late receipt)
HSE inspections, observations, improvement notices and prohibitions
Working at height
PPE – not using/not using correctly
Review of Accident Book entries
Possible 3rd Party specific (e.g. Network Rail)
NCRs
CARs (non-completion/late response or action)
Procedure compliance
Test failures (to include concrete and welding)
Safety Tours
Safety Inspections
Security
Achievement of programme
Snagging correction

Method Statements/Risk Assessments – failure to operate in compliance therewith
Late Possessions / Overruns
Reporting
Spills
Working hours contraventions
Complaints
Pollution – water courses; noise; light; dust; others
Trespass
COSHH contraventions
Signage and warning signage
Specific parameters may need to be devised relating to programme, performance, reporting and other specific issues that are important to **tie**.

The Infraco shall submit samples, manufacturers' literature, documentation and other such materials to demonstrate compliance with the Employer's Requirements, from time to time, for review by **tie**, in advance of the associated materials or equipment being procured. The Infraco shall prepare a Schedule of Procurement Proposals to identify all such proposed submissions and their timing for approval by **tie**.

12.10 Cost Management and Reporting

The Infraco shall carry out a pro-active role in cost management and reporting. A cost report shall be submitted by the Infraco to **tie** no later than 3 Business Days before each cost review meetings / or at a 4 weekly period, to be agreed with **tie**. In addition cost summary information shall be provided for inclusion in the Progress Reports.

The Infraco cost reports shall contain comprehensive information and shall be structured in a manner that is commensurate with **tie**'s own reporting structure. The cost reports shall be required to provide information, including the following:

- Executive summary and narrative on significant changes from the previous report;
- Actual / Planned / Forecast Spend Tables / Curves to match the achievement of major deliverables and activities within the Work Breakdown Structure;
- Change Control Schedule and background information;
- Schedule of Compensation Events and background information;
- Value management estimates / analysis;
- Schedule of status of completion of Construction Milestones and Critical Milestones;
- Copy of the progress statements included in Monthly Progress Monitor.

The Infraco shall also be required to provide value engineering estimates and reports. These reports shall be provided by Infraco from time to time, as proposed by the Infraco or as required by **tie**, for the purpose of achieving better value.

12.11 Risk Management

12.11.1 Project Objectives

tie is dedicated to ensuring that a consistent approach to risk management is adopted across the ETN, which shall enable an informed view of risk to be taken.

ETN project risk management's mission is "to successfully manage all risks to and opportunities for the project thus ensuring that a supported and fully functioning operational service is delivered within budget and on time.

The key drivers within this mission are to:

- Promote and support proactive management of risk and opportunity;
- Integrate risk awareness / management, and not risk aversion, into the project culture;
- Manage risk in accordance with best practice;
- Reduce risk exposure to acceptable levels;
- Capitalise on opportunities;
- Ensure that all identified risks are owned and managed by the party best able to manage them;
- Provide assurance and enhanced information to managers and stakeholders.

tie maintains a project risk management plan and risk register covering the strategic, project management and commercial aspects of the ETN and shall continue to do so throughout the Term and operation. **tie** seeks to have all service providers, including the Infraco, contributing towards this risk register.

12.11.2 Risk Deliverables

The Infraco shall provide various Deliverables, as described in this section, to assist **tie** in meeting **tie**'s risk management obligations associated with strategic, project management and commercial aspects of the ETN. The required procedures for managing hazards and risks associated with obligations associated with safety are not covered in this section.

The Infraco shall be responsible for the production, management, development, regular maintenance and necessary updating and distribution of the documentation included within the table below. The documentation shall be held by the Infraco in electronic format with hard and soft copies being made available as required.

Risk Documentation shall be submitted to **tie**, in paper copy and electronically, for their approval in accordance with the Review Procedure and the required dates and frequencies are included in the table below.

Required Action from the Infraco	Timing/Frequency applicable to the Infraco
The Infraco shall provide assurance that they shall manage design and construction risk to the satisfaction of **tie** and in order to fulfil the objectives described in12.11.1. As part of this obligation the Infraco shall be responsible for the production, development and maintenance of a Infraco Risk Management Plan ("IRMP") for the management of all risk aspects of the Edinburgh Tram Network throughout the Term. The IRMP shall focus on the risk factors related to the Infraco managed activities related to the Infraco Works for the delivery of the Edinburgh Tram Network including the risk deliverables noted below. The IRMP shall identify individuals and their responsibility in relation to risk.	Agree format and delivery date for the IRMP with **tie**'s designated risk manager within one month of the Commencement Date. The Infraco shall update and maintain the IRMP throughout the Term. The Infraco shall issue an update to the IRMP at least bi-annually throughout the Term.

Required Action from the Infraco	Timing/Frequency applicable to the Infraco
The Infraco shall be responsible for the development and maintenance of an Infraco Risk Register ("IRR"), to best present all capex, opex, lifecycle, programme and quality risks to the Edinburgh Tram Network. The IRR shall also detail the proposed and completed mitigation of such risks. The platform used shall include the ability to generate reports, highlight risks to **tie**, key programme and cost impacts. The Infraco shall be responsible for the identification of commercial risks associated with all interfaces related to the works and shall facilitate and coordinate the inputs from stakeholders and other parties requested by **tie** from time to time. The IRR shall include analysis of each risk in terms of 'likelihood' and 'impact' providing detail on the inherent risk significance and current residual risk significance. Each risk shall have a designated responsible owner and the Infraco shall provide dashboard type graphical summaries of the risk profile and management actions being taken to mitigate. The risks to be addressed should include technical, operational, infrastructure, interface, economic, legal and regulatory, organisational and environmental risks. The Infraco should review the IRR on a four weekly basis to ensure that it is current. The Infraco shall meet with **tie** on a four weekly basis in line with the tram period calendar to discuss the control of key risks by the Infraco.	Agree format assessment criteria, platform and delivery date with **tie**'s designated risk manager within one month of the Commencement Date. The Infraco shall update and maintain the IRR as required on a four weekly basis and shall distribute the IRR to **tie** on a four weekly basis throughout the Term. Assessment criteria must be compatible with **tie**'s own risk register and assessment criteria.

Required Action from the Infraco	Timing/Frequency applicable to the Infraco
It is recognised that the identification, monitoring and progress of risk shall be discussed at regular workshops. The Infraco shall provide to **tie** a schedule of and undertake workshops, regarding risk matters to assist **tie** in ensuring the effective management of risk in relation to the Edinburgh Tram Network, **tie**, the Operator and/or relevant suppliers should receive timely notification of these in order to be able to attend. It is noted that **tie** may routinely request to attend workshops in order to be able to evaluate Infraco's approach to and performance in relation to risk. Infraco shall also attend meetings and workshops with **tie**'s project and risk management team and other ETN suppliers, the Operator and service providers as instructed by **tie** to take part in update of existing project risk and identification of new risks. The representatives attending such workshops shall be qualified and shall have sufficient knowledge of the ETN project to be able to contribute pertinent information within these workshops.	Provide and agree workshop schedule for the coming 6 months within the risk progress report to **tie**'s designated risk manager within 2 months of the Commencement Date.

Required Action from the Infraco	Timing/Frequency applicable to the Infraco
The Infraco shall be responsible for the preparation and maintenance of a Commissioning Risk Control Report which shall detail the plans for mitigating risks associated with the commissioning of the Edinburgh Tram Network. This should cover commissioning, operational and design risks, but not limited to the trams, the tracks, the power supply and the tram depot. The Commissioning Risk Control Report shall concentrate primarily on the (commercial risk) associated with the commissioning process, but shall also refer to ongoing issues which also affect the construction and/or operation or part operation of the Edinburgh Tram Network .	Agree format of the Commissioning Risk Control Report to **tie**'s designated risk manager (as notified to the Infraco from time to time) within 6 month of the Commencement Date. Final report to be delivered at least 3-months prior to start of the Testing and Commissioning. The Infraco shall update the Commissioning Risk Control Report as required until the Service Commencement Date..
The Infraco shall be responsible for the preparation and maintenance of a Residual Risk Control Report ("RRCR") that will detail the plans for mitigating the risks arising from the construction and commissioning of the Edinburgh Tram Network, which are still of ongoing importance. The RRCR should clearly detail the areas of importance that could affect the ETN after the Service Commencement Date until the end of the Term. These areas could be associated with design, operational and defects factors. Risks to be noted in the RRCR may include, but shall not be limited to commercial risk associated with, snagging, claims, specification defects and other commercial concerns.	Agree format of RRCR with **tie**'s designated risk manager (as notified to the Infraco from time to time) within 12 months of the Commencement Date. Final report to be delivered at least three months prior to the Service Commencement Date. The Infraco shall update the RRCR as required throughout the Term.

Required Action from the Infraco	Timing/Frequency applicable to the Infraco
The Infraco shall prepare and maintain an Operational and Maintenance Risk Register ("OMRR") that will detail the identified risks associated with provision of the Maintenance Services in relation to the Edinburgh Tram Network and management actions being taken to mitigate. The Infraco shall liaise with its Sub-Contractors and the Operator and any other relevant party as required in relation to the creation, development and updating of the OMR	Agree format and assessment criteria of the OMRR with **tie**'s designated risk manager (as notified to the Infraco from time to time) within 12 months of the Commencement Date. First formal report to be delivered at least three months prior to the Service Commencement Date. The Infraco shall update the OMRR in line with the four weekly tram period calendar

Table 27 - Table showing required actions from the Infraco

12.12 Traffic Management / Temporary Traffic Regulation Orders (TTROs)

The Infraco shall be responsible for the preparation of a Traffic Management Plan (TMP) and Work Site Staging Plan (WSSP). The TMP and WSSP shall comply with instructions issued by **tie** and shall be drafted in consultation with **tie** and CEC. The Infraco shall be responsible for the preparation of a Traffic Management Plan (TMP) and Work Site Staging Plan (WSSP). The plans shall apply to all work required in connection with the Infraco and including wider area traffic management measures associated with the construction of the main works. The TMP and WSSP shall comply with instructions issued by **tie** and shall be drafted in consultation with **tie** and CEC.

The TMP and WSSP shall identify and account for interfaces with parallel works, including the MUDFA Works.

The TMP and WSSP shall also include all necessary survey work, temporary traffic diversion modelling, assessment and design which will take account of the works, network constraints and the traffic control requirements.

The design shall identify the required alterations to road layouts, regulatory changes to be enacted through TTRO, altered/additional traffic signal equipment, new traffic signal installations and advance/local road signage.

The design shall also determine the locations of temporary bus stops and taxi ranks, alterations to parking and access/servicing arrangements for residents and businesses in works areas.

The TMP and WSSP shall be submitted within four weeks of the Commencement Date by the Infraco to **tie** and CEC for approval in accordance with the Review Procedure and as detailed in the current CEC-**tie** Interface Protocol relating to TTROs (Protocol Ref: TECH – 01).

The TMP and WSSP submission packages shall be as described in the Protocol and the plans shall include temporary works method statements, and shall identify general traffic, bus and pedestrian diversionary routes, access routes for emergency vehicles, and alternative arrangements for bus stops, parking and loading. The plans shall also include assumptions registers, issues logs and any other means to ensure prompt resolution of issues which could affect the progress and economic execution of the Infraco Works.

Leaflets and other approved publicity material as reasonably required shall be prepared for the information of the public/stakeholders/media showing temporary traffic management arrangements and traffic diversions and how these will operate.

Prior to implementation the TMP and WSSP shall be presented for review and approval to the **tie**/CEC/ Police/TEL Traffic Management Review Panel (TMRP) in-line with the agreed protocols and timescales which include procedures to give stakeholders advanced notification of the proposed arrangements to be implemented during the works.

The TMP and WSSP shall also include all necessary drawings, diagrams and supporting information to show the mobilisation, erection and dismantling of Temporary Works, traffic and pedestrian management during any pre-diversion works and the Infraco Works, access to properties, details of fencing and security measures.

The Infraco shall update the TMP and WSSP every two weeks throughout the duration of the Infraco Works for review at fortnightly design meetings and every four weeks at stakeholder and third part meetings.

The Infraco shall be responsible for the preparation of draft TTROs which shall be submitted to **tie** for onward submission to CEC, in its capacity as Roads Authority, for approval, again as described in the current CEC-**tie** Interface Protocol relating to TTROs (Protocol Ref: TECH – 01). The submission packages shall be as described in the Protocol.

TTRO submissions will adhere to the programme detailed in the Protocol.

The Infraco shall also attend meetings in relation to the TTROs, as required by **tie**, including representations to the **tie** / CEC Roads Working Group Committee, which convenes quarterly.

The Infraco shall develop a set of requirements in relation to TTROs and traffic management, which shall be based on information supplied to the Infraco by **tie** and/or **tie** ("TTRO Obligations and Traffic Management Plan") and shall take account of the interface on traffic management that will be required in relation to the MUDFA Works.

The Infraco shall prepare and develop project-specific procedures for complying with the TTRO Obligations and Traffic Management Plan, and these procedures shall be submitted for approval by **tie** and CEC in sufficient time to avoid disruption to the Programme.

By appropriate induction, the Infraco shall ensure all site-based personnel, management staff, operatives and visitors are fully aware of and understand the procedures contained within these Employer's Requirements.

The designated project or site manager appointed by the Infraco shall be accountable for the implementation and compliance with these requirements and procedures.

The Infraco shall ensure that the overriding considerations expressed in these procedures and requirements shall be the safety of road users, minimising disruption caused by the Infraco Works, pedestrian management and ensuring that traffic and pedestrian disruption is kept to a minimum.

This shall include taking such measures as CEC, in its capacity as roads authority, may reasonably require.

The Infraco shall ensure that reasonable access to all business, residential premises and properties (having regard to Infraco's obligation to comply with the Programme) along the route of the Edinburgh Tram Network is maintained at all times. Infraco shall not be obliged by virtue of this provision to provide access which is more extensive than the access agreed in any Third Party Agreement.

12.13 Stakeholder Management

12.13.1 General

A Stakeholder and Communications Management Plan has been developed by **tie**. The Infraco shall comply with the requirements of this document.

The Infraco shall be, jointly with **tie**, accountable for minimising any possible adverse impact of the implementation of the Edinburgh Tram Network on stakeholders (both statutory and non statutory), local businesses and the general public.

12.13.2 Design

The Infraco shall incorporate the following requirements into the design in addition to any other requirements as defined:

- Securing, implementing and incorporating into the design all necessary Network Rail, BAA and other third party agreements;
- Assisting by providing all technical details relevant to the compulsory purchase order process and land acquisition process (including wayleaves and servitudes); including integration with **tie**'s stakeholder and GIS systems.
- Liaising with CEC, Scottish Executive, Historic Scotland, World Heritage Trust, Scottish Natural Heritage and others as required by **tie** in relation to the performance of the Infraco Works.

12.13.3 Liaison and Public Information

The Infraco shall appoint a liaison officer to manage all public relations, information and press related matters relating to the Infraco Works, who shall along with the necessary technical, commercial and other Infraco resource, liaise with **tie**, and if so requested by **tie**, with CEC, other statutory bodies, members of the public, local businesses, the press and the media as may be

necessary on all matters relating to the Infraco Works. Except where expressly stated in the Agreement, the Infraco shall not make any publicity or media statements or make any other formal disclosure of information regarding the Infraco Works without the prior approval of **tie**.

The liaison obligation referred to in the above paragraph shall include, but shall not be limited to the following matters:

- From time to time as directed by **tie**, Infraco shall be required to participate in business, stakeholder and community liaison groups, public meetings and consultation meetings as the progress of the Infraco Works dictate.

- From time to time as directed by **tie**, Infraco shall be required to provide proactive input, information and comment into information initiatives organised by or on behalf of **tie** and attending as requested by **tie** at any relevant consultation meetings

- As directed by **tie Infraco** will assist with the development and maintenance of, and adherence to, a communications protocol for dealing with all stakeholders, businesses and members of the public affected by the Infraco Works. In particular this will require strict adherence to timescales determined by **tie**.

- Assisting with the development and maintenance of procedures developed by **tie** in relation to stakeholder management by way of the provision of information relating to the Infraco Works

- Provision of weekly updates to **tie** on the progress of the Infraco Works and all planned Infraco Works in a form reasonably requested by **tie**.

- Depending upon the type of communication, Infraco shall give **tie** a minimum of two weeks notice in advance of all plans for any formal communication with stakeholders, businesses and members of the public (e.g. for major customer works governed by the Customer Interaction Cycle far more weeks would be required). The form and content of such formal communication shall be subject to **tie**'s prior approval

- Provision to **tie** of all information reasonably requested by **tie** in respect of the Infraco Works planned in a form prescribed by **tie** and timescales and frequency agreed with **tie**.

- **tie** and Infraco will be jointly involved in the appointment of appropriately qualified "Tram Helpers". They will be directly managed by **tie,** but integrated into Infraco work areas and teams through joint induction and briefing; appropriate cross training; "Tram Helper" visibility in Infraco work areas; "Tram Helper" involvement in the direct management of stakeholder issues on site;

direct engagement by "Tram Helpers" or appropriate Infraco management and staff to assist in the resolution of on site issues; provision of appropriate Infraco uniform and equipment, etc. "Tram helpers" are to be recruited and in place four weeks prior to commencement of notification.

- Provision and use of approved branding materials, PPE kit and signage at all operational Work Sections. No such materials, kit or signage shall be erected at any Work Section without the prior approval of **tie**.

- The provision and distribution of traffic routing maps which conform to the terms of the TTROs for all areas affected by the Infraco Works in advance of the Infraco Works starting in any particular location as may be requested by **tie**. In the event that **tie** requires that such material is for public issue, public issue shall not occur before the form and content has been approved by **tie**. Infraco shall ensure that all public statements (including by way of media referred to in the sections below (customer care centre, website, weekly newsletter, monthly newsletter, call centre and communication log) in relation to the Infraco Works are consistent with (**tie**'s) Communications Strategy and integrated with **tie**'s systems and procedures.

12.13.4 Information Centre

The Infraco shall provide all information and documentation regarding the Infraco Works as may be reasonably required by **tie** in respect of the mobile and fixed information centres being operated jointly by **tie** and Infraco in relation to the Edinburgh Tram Network. The frequency of update and version control of information shall be subject to a process agreed with **tie**.

12.13.5 Website

The Infraco shall provide all information regarding the Infraco Works, reasonably requested by **tie**, in order to populate the website, which shall be maintained and operated by **tie** throughout the progress of the Infraco Works, in respect of the Edinburgh Tram Network. The frequency of update and version control of information shall be subject to a process agreed with **tie**.

12.13.6 Weekly Newsletter

The Infraco shall produce and publish weekly newsletters every Wednesday, detailing the Infraco Works to be undertaken in the forthcoming week and outlining, with appropriate maps, drawings and diagrams, the impact on the general public, businesses and in particular any alterations to road traffic circulation patterns required by the coming week's Infraco Works.

Each newsletter, the contents and format of which shall have the prior approval of **tie**, will also be issued, if requested by **tie**, by fax and email to: local and national newspapers and other news media, CEC, Lothian and Borders Police, the emergency services, to any party or parties requested by **tie** and to any other persons or organisations that have requested receipt of the newsletters.

The newsletters shall also be distributed door to door by the Infraco in affected locations and the Infraco shall advise **tie** when such distribution is occurring.

The Infraco shall monitor and record the distribution of newsletters, recording who is carrying out such distribution, the intended recipients etc, so as to enable **tie** to carry out its own audit and monitoring of such distribution. Infraco to ensure, by regular surveys that circulation data is accurate and up to date.

Sufficient free distribution take-away hard copies of these newsletters shall be delivered to and placed in the information centre by the Infraco before 08:00 every Thursday morning.

The Infraco is required to submit a draft of each issue of the newsletters to **tie** no later than midday on the Monday immediately preceding the proposed issue of the newsletters on the Wednesday. **tie** shall respond before 17.00 hours the same day.

12.13.7 tie Monthly Newsletter

The Infraco shall provide all information and assistance reasonably requested by **tie** in relation to the publication by **tie**, of a monthly newsletter in relation to the progress of and future plans for the Edinburgh Tram Network.

12.13.8 Customer Contact Centre

The telephone number, fax number and e-mail address of the call centre to be operated jointly by **tie** and Infraco in relation to the Edinburgh Tram Network (the "hotline") shall be publicised through the press and the weekly newsletter and clearly displayed on all appropriate PPE kit, site signage, hoardings and at other suitable locations within and throughout the vicinity of the Infraco Works. All letters, e-mails, customer queries shall be answered by Infraco within timescales, to be agreed in advance with **tie**.

12.13.9 Communication Log

All contacts, communications, complaints, comments and queries howsoever received by the Infraco shall be registered in a suitable electronic log (the "communication log").

The Communications Log shall be developed and maintained by Infraco in a manner that allows it to be fully integrated with **tie**'s Stakeholder Database and GIS systems. The communication log shall set out each contact under the type (e.g. General, Traffic, Safety, Vibration, Noise, Dirt, Disruption, Injury, Parking, Access, RTA, publicity, suggestions etc).

The method of approach shall also be logged (e.g. phone, direct, letter, email, etc.) as well as the time and date.

The log shall be so constructed such that statistical analysis of the different communications can be presented as part of the data to be provided to **tie**. It shall be a requirement that the Infraco shall deliver an "above average" customer satisfaction level, with criteria, frequency and method of assessment to be agreed by **tie**. In order to demonstrate this, there shall be a requirement for the Infraco (and as required **tie**) to undertake internal (and external) audits of the overall engagements with the stakeholders. All this information shall be summarised by the Infraco in its monthly progress report.

Infraco shall take such steps as are required to address any such contact, communication, complaint, comment or query in accordance with the response requirements set out in Table 28 - Notification Hierarchy and in line with the agreed enquiry management process.

To the extent that a stricter response requirement is otherwise required under the Agreement, the stricter response requirement shall apply.

To the extent that Table 26 provides for the recovery of any amount by **tie** from the Infraco, such amount may be deducted from any monies due to or to become due to the Infraco or, alternatively, may be recovered from the Infraco as a debt.

A record of all remedial actions taken shall be maintained.

In the event of the Infraco receiving a complaint, a follow up letter or electronic communication shall be passed to the complainant by the Infraco within 24 hours of their receipt of the complaint, outlining the complaint and details and timing of the remedial action being undertaken by the Infraco.

An up to date copy of the communications log shall be compiled daily by the Infraco, together with a report on the progress of any actions.

The communications log shall be inspected and signed daily by a nominated senior representative of the Infraco and shall be counter signed by the Infraco's Representative at least once per week.

The Infraco's Representative shall write a report to **tie** and/or the Nominated City Officer of CEC (as notified by **tie** from time to time) at a frequency determined by **tie** (at least once per month) containing a list of any breaches of the requirements as defined within this section and also Schedule 3 (Code of Construction Practice and Code of Maintenance Contract) occurring within the previous month, setting out:

- the nature of the breach;
- the duration of the breach;
- the action taken by the Infraco to mitigate the breach; and
- the steps taken to minimise the likelihood of a subsequent occurrence of the breach.

Subject to the Infraco obtaining **tie**'s prior approval, a copy of each week's communication log shall be placed every Friday in the information centres, where it will remain until completion of the Infraco Works.

Any person, including representatives of **tie** and CEC's nominated representatives may freely inspect all deposited copies of the communications log during the normal opening hours of the information centres.

The version of communications log on public display should not breach any data protection legislation or other Law.

Copies of the communication log shall be forwarded to **tie**'s Representative and/or and CEC's Nominated City Officer once per week.

The master communication log shall be available for **tie**'s Representative and CEC's Nominated City Officer to inspect at any other time during normal working hours.

Level of Urgency	Category of Notification	Required Response Time
1	**High urgency** Involves an immediate threat to persons or property or the circumstances otherwise require immediate rectification.	Immediate action required. If response not completed by the Infraco within 4 hours, **tie** may procure that the relevant work is carried out and the costs of so doing shall be recovered from the Infraco.
2	**Medium urgency** No immediate threat to persons or property, but circumstances require rectification within 24 hours.	Remedial action requires to be completed within 24 hours. If the Infraco does not complete the required response within 24 hours, **tie** may procure that the relevant work is carried out and the costs of so doing shall be recovered from the Infraco.
3	**Issue requires rectification** but no immediate threat to persons or property and the circumstances do not otherwise require immediate rectification.	Timescales for rectification to be agreed between the Infraco and **tie**. In the event that the Infraco does not comply with the agreed timescales, **tie** may procure that the relevant work is carried out and the costs of so doing shall be recovered from the Infraco.

Table 28 - Notification Hierarchy

13 Permits / Approvals

The Infraco shall obtain all necessary permits and approvals prior to undertaking investigations or works on Site, in accordance with paragraph 3 of the Code of Construction Practice.

13.1 Method Statements

The Infraco shall prepare method statements in respect of all investigation and work activities, as detailed in this Section and paragraph 3.2 of the Code of Construction Practice and submit these in accordance with paragraph 3.3 of the Code of Construction Practice.

The Infraco shall produce a method statement entitled "Procedures for dealing with Unidentified Apparatus or Unrecorded Artificial Obstructions", which shall be submitted by Infraco in accordance with paragraph 3.3 of the Code of Construction Practice. This method statement shall contain procedures which shall confirm the processes for dealing with unforeseeable events or circumstances, the discovery of unidentified apparatus (including live services) or unrecorded artificial obstructions. The final version of the method statement and procedures shall be agreed with the relevant key third parties, Approval Bodies, the Utilities and the emergency services The method statement shall be updated and a final version produced which shall be finalised by the Infraco in accordance with paragraph 3.3 of the Code of Construction Practice.

13.2 Existing Structures Which May Affect Progress and relationship with Third Parties

The Infraco shall undertake works to address the condition of existing structures where such condition may affect the progress of the Infraco Works. Where such work is completed the Infraco shall take appropriate photographs to fully demonstrate the quality of the reinstatement works.

The Infraco shall undertake survey inspections associated with buildings and structures which may be at risk of physical damage as a result of the Infraco Works.

For such structures and buildings the Infraco shall compile an appropriate schedule of such buildings / structures, and produce surveys / records similar to those described under paragraph 18.2.1 of Schedule 3 (Code of Construction and Code of Maintenance Practice).

Early warning must be given to **tie** where any third party is, or is likely to start, acting unreasonably. In these situations, **tie** will seek to resolve any issues with the third party to assist Infraco.

13.3 Network Rail

The Infraco shall ensure that the requirements of the Network Rail GRIP process are implemented on the works for which they are responsible whilst working in accordance with all relevant Network Rail Group Standards.

The contract requirements for Network Rail with regard to health and safety are included within the Network Rail document NR/SP/OHS/008. The project specific requirements are identified within the Safety Clause Menu against the requirements of Network Rail document NR/SP/OHS/008 and indicated with 'ticks' in the contractor column sections 51 to 59 inclusive of the safety clause menu and any other requirements that the Infraco is proposing by virtue of his method of undertaking the Infraco Works. The safety clause menu shall be signed off by the Infraco to confirm its proposals.

The Infraco Works shall be undertaken as Third Party Works as identified within the Network Rail document (RT/LS/P/043).

14 Human Factors

The Infraco shall provide systems and working practices that are:

- As easy to use as possible;
- Unlikely to cause annoyance or stress to users of the Edinburgh Tram Network, whether members of the public, operators, or maintainers; and
- Likely to promote safety to all.

The Infraco shall systematically and comprehensively:

- identify all the human factors issues associated with the engineering of the Edinburgh Tram Network, using task analysis;
- determine which of these human factors issues pose the most significant risk to the efficiency, productivity, safety and health of the Edinburgh Tram Network; and
- describe the organisational arrangements and processes the Infraco intends to put in place to manage these significant human factors issues as part of the engineering of the Edinburgh Tram Network

The Infraco shall produce and maintain in accordance with the submittals schedule a human factors management plan, covering the requirements summarised above, and where appropriate, shall undertake human factors studies to recommend solutions.

Areas of particular concern are:

- The human computer interfaces in the Control Centre;
- The layout of the driver's cabs;
- The facilities to enable maintenance of equipment:
  - In the workshop and Depot;
  - At trackside;

- In substations;
- At the Tramstops; and
- In the Control Centre.

The Infraco shall adopt all applicable best practice and guidelines for human factors. In designing the environment in the Control Centre, the Infraco shall comply with BS EN 50126 and ISO 11064 "Ergonomic Design of Control Centres.

15 Reliability, Availability and Maintainability

15.1 Reliability and Availability

The Edinburgh Tram Network is made up of many different subsystems, most of which may affect the reliability of operation of the ETN as a whole. In respect of achieving and maintaining reliability, the Infraco shall design, construct and maintain the Edinburgh Tram Network in accordance with Good Industry Practice, subject to the reasonable constraints of cost. Where necessary, the ETN should be made resilient to single point equipment and cable failure by employing suitable levels of equipment/cable redundancy and duplication.

On equipment or cable failure, subsystems shall be designed in a fail-safe manner, with graceful degradation. Limited back-up facilities shall be provided to maintain services under specified partial failure conditions.

Defined below are the requirements for availability of individual subsystems (each of which is given a definition), and also the availability of individual components of the subsystems.

In addition to the above, the overall availability of the Edinburgh Tram Network and its subsystems must support the tram punctuality requirement that is set out in these Employer's Requirements. Consequently it may be necessary to increase the minimum requirements that are set out below, especially as the consequences of the actions that third parties may take, including delays caused by other road users, need to be included in the punctuality analysis for the Edinburgh Tram Network.

For all components and subsystems, assume a Mean Time to Repair (MTTR) of 4 hours.

Any downtime required for planned maintenance can be discounted from the determination of availability, provided that such maintenance can be reasonably undertaken at a time when the maintenance has no impact on the operation of the ETN. This will often be during overnight shut downs.

15.2 Traction Power System

Component or Subsystem	Minimum Availability
AC circuit breaker, where its availability is defined as the probability that it either fails to conduct electricity when commended to be closed.	99.99%
Transformer / rectifier where its availability is defined as the probability that it either fails to provide the nominal 750VDC when energised.	99.99%
DC circuit breakers and busbars, where its availability is defined as the probability that traction power is not available from the DCCB when commanded to be closed, provided that 750 VDC is available at from the rectifier	99.99%
Transformer / rectifier where its availability is defined as the probability that it fails to provide the nominal 750VDC when energised by the HV input.	99.99%
Substation battery and charger, where its availability is defined as the probability that control voltage is not available from the battery at any time during its normal operation, regardless of the state of the incoming LV supply	99.99%
Substation, where its availability is defined as the probability that 750VDC voltage is not available for the OLE when the substation is commanded to provide 750VDC	99.75%

Table 29 - Substation Equipment

Component or Subsystem	Minimum Availability
OLE System, where its availability is defined as the probability that in any linear km of the OLE system, trams are not able to operate at the normal operational speed due to defects in the OLE. This is based on an 8 hour incident once every 3 years, 20hr/day operation and (20 route-km plus depot, about 50 track-km)	99.99925% for each km

Table 30 – Overhead Line Equipment

15.3 Supervisory and Communications Systems.

Component or Subsystem	Minimum Availability
ODN node	99.99%
Fibre Optic Cabling	99.99%
Patch Panels and Connectors	99.99%
ODN network, where its availability is defined as the probability that any message from a given input to a node reaches its intended destination node correctly and could be transmitted onwards by that node.	99.99%

Table 31 - Operational Data Network

Component or Subsystem	Minimum Availability
Transponder (if used)	99.9%
Loop Detector	99.9%
TPDS Trackside Controller	99.9%
TPDS subsystem, where its availability is defined as the probability that any given tram has its position detected and passed to the signal controller and to Control Centre operators correctly, assuming that the ODN is fully functional and that the hardware component of the Control Centre servers and workstations is fully functional	99.75%

Table 32 - Tram Position and Detection System

Component or Subsystem	Minimum Availability
Passenger Information Display	99.9%
Local Controller (if required)	99.9%
PID subsystem, where its availability is defined as the probability that the appropriate message is displayed correctly at a given PID, assuming that the ODN is fully functional and that the hardware component of the Control Centre servers and workstations is fully functional	99.75%

Table 33 – Passenger Information Display

Component or Subsystem	Minimum Availability
Telephone Handset	99.9%
PABX	99.99%
Telephone network, where its availability is defined as the probability that any 30 second conversation between a given telephone and another given telephone is heard clearly and completely by the caller and the intended recipient, assuming that the ODN is fully functional.	99.75%

Table 34 – Telephone Network

Component or Subsystem	Minimum Availability
PA speaker	99.9%
PA controller	99.9%
Microphone and speaker	99.9%
PA subsystem, where its availability is defined as the probability that an operator can make an intended announcement clearly at a given platform, assuming that the ODN is fully functional and that the hardware component of the Control Centre servers and workstations is fully functional.	99.75%

Table 35 - Public Address System

Component or Subsystem	Minimum Availability
Base Station	99.95%
Mobile Handset (Tram, Vehicle, or Hand Held)	99.7%
Central Switch	99.99%
Operational Radio subsystem, where its availability is defined as the probability that a 10 second call (voice) or short data message can be received clearly by the intended recipient, assuming that the ODN is fully functional and that the hardware component of the Control Centre workstations is fully functional	99.75%

Table 36 - Operational Radio System

Component or Subsystem	Minimum Availability
Help / Emergency Help Point	99.9%
Help Point subsystem, where its availability is defined as the probability that a member of the public can contact the Control Centre operator and can carry out a Help Point conversation lasting 20 seconds, clearly and without interruption, assuming that the ODN is fully functional and that the PABX is fully functional	99.75%

Table 37 - Passenger Help / Passenger Emergency Help System

Component or Subsystem	Minimum Availability
CCTV camera	99.95%
Digital Video Recorder	99.95%
CCTV Matrix	99.95%
CCTV subsystem, where its availability is defined as the probability that an image is displayed correctly and in the specified sequence at the Control Centre, assuming that the ODN is fully functional and that the hardware component of the Control Centre servers and workstations is fully functional	99.9%
Recording and replay subsystem, where its availability is defined as the probability that an image is displayed from any given time in the past (within the recorded period) can be retrieved and displayed correctly, assuming that the ODN is fully functional and that the hardware component of the Control Centre servers and workstations is fully functional	99.9%

Table 38 - CCTV System

Component or Subsystem	Minimum Availability
SCADA RTU (including I/O cards and interface cards)	99.95%
SCADA subsystem, where its availability is defined as the probability is the lesser of (a) that an indicator is read correctly at the RTU, transmitted to the SCADA Master Station in the Control Centre, and displayed correctly on any SCADA display that is in use within four seconds: and (b) that a control is effectively transmitted to an outstation within two seconds, assuming that the ODN is fully functional and that the hardware component of the Control Centre servers and workstations is fully functional	99.75%

Table 39 - SCADA System

Component or Subsystem	Minimum Availability
Servers (if necessary, by use of hardware and software redundancy)	99.99%
Workstations	99.9%
Printers	99.5%
CCTV Matrix Controller	99.9%
LAN Switches, Routers and Hubs	99.99%

Table 40 - Central Control Equipment

15.4 Maintainability

The ETN and its components shall be designed with maintainability in mind. To this end, the following shall be observed:

- Important equipment shall be in a redundant configuration, so that a component may be replaced while standby equipment takes over its duty;
- Equipment shall be replaceable, if possible, as field replaceable units, so that defective components can be replaced without the need to power down the overall piece of equipment; and
- Equipment, particularly at trackside and on Tramstops, shall be positioned so that where possible it is accessible for maintenance or replacement without the necessity to halt tramway traffic or to close the Tramstop and without the need to use access equipment such as steps.

15.5 Supportability

The equipment selected for use on the Edinburgh Tram Network shall be selected so that:

- It has a long design life, as specified in section 6 of these Employer's Requirements.
- It shall be based on standard Commercial Off-the Shelf (COTS) equipment as far as appropriate, so that replacement parts may be easily obtained and integrated into the ETN without the necessity of resorting to the original subsystem or equipment suppliers.

16 Electromagnetic Compatibility

16.1 EMC Directive

On 20th July 2007 a new EMC Directive came into force in the European Union. Statutory Instrument 2006 No.3418 implements the new EMC Directive 2004/108/EC in UK law. The rules for the new EMC Directive have changed significantly from the old Directive (89/336/EEC). After 19th July 2009 declarations made will require appropriate "Technical Documentation". This means that the Declaration of Conformity made using the old conformance mechanisms will have to be updated to use "Technical Documentation". The Infraco must be aware of the relevance of the 19th July 2009 date and insist that suppliers provide documentation accordingly.

16.2 Essential Protection Requirements

The purpose of the EMC Directive is to ensure that electrical/electronic equipment does not cause or be susceptible to electromagnetic disturbance. The protection requirements required of all electrical/electronic equipment/systems/installations are as follows:

- the electromagnetic disturbance generated shall not exceed the level above which radio and telecommunications equipment or other equipment cannot operate as intended; and

- they shall have a level of immunity to the electromagnetic disturbance to be expected in their intended use which allows them to operate without unacceptable degradation of that intended use.

The Infraco must produce an Edinburgh Tram Network specific EMC strategy document in accordance with the Submittal Programme that clearly defines its strategy for achieving compliance with these essential protection requirements and shall submit it to **tie** for its approval.

17 Health, Safety, Quality and Environment

17.1 Quality Management

The Infraco shall undertake the Infraco Works fully in compliance with quality management processes and procedures referenced in ISO 9001 and ISO 9004.

The Infraco shall develop a Quality Plan to meet the requirements of ISO 10005 - 1995, and which fully defines all quality aspects of the Infraco Works. The Quality Plan shall be submitted in accordance with the Review Procedure. The Quality Plan shall demonstrate an integrated quality management system relating to the design, construction, testing, commissioning and maintenance of the Edinburgh Tram Network and shall show how Infraco and its Sub-Contractors shall comply with the requirements of the Quality Plan.

The Infraco shall have all associated documentation readily available for internal review and review by **tie**. Regular internal audits shall be undertaken by the Infraco to ensure full compliance with ISO 9001 and ISO 9004 in accordance with paragraph 5.1 of the Code of Construction Practice. The Infraco shall prepare and submit in accordance with the Review Procedure a "Schedule of Internal Audits" for agreement with **tie**. This shall define the planned nature and timing of the internal audits. Furthermore **tie** reserves the right to undertake external audits in accordance with paragraph 5.2 of the Code of Construction Practice.

The Infraco shall ensure that its management system for the Infraco Works is developed to ensure that it aligns with the requirements of the Tram Project Quality Policy Statement (DEL.HSQE.103).

Quality control including materials and works on Site shall also be undertaken by the Infraco in accordance with the requirements of paragraph 3.2 of the Code of Construction Practice and the Project Safety and Quality Interface Document. The Infraco shall be required to comply with the requirements of this document including the completion of forms and other systems in order to assist **tie** in complying with **tie's** own safety and quality management systems.

17.2 Health & Safety

17.2.1 Safety Management Plan

The Infraco shall submit a safety management plan that is over-arching with regard to safety and defines the management procedures that shall be put in place to ensure health and safety for the design, construction, testing, commissioning and maintenance of the Edinburgh Tram Network. This document shall be stand alone and separate from other safety deliverables such as health and safety plan, system safety management plan, case for safety development etc. The Safety Management Plan shall address all issues relating to the safety of the Infraco Works, staff and third parties, however specific details relating to the items below are required and shall be submitted by the Infraco in accordance with the Submittal Programme:

- The plan shall detail the approach and all management procedures relating to health and safety for the Edinburgh Tram Network;
- The plan shall show how the Infraco will ensure that its Sub-Contractors apply all relevant health and safety policies and procedures to all Sub-Contractors;
- Details of all interfaces associated with safety and the procedures of how these shall be managed. Interfaces shall include Roads Authorities, Health and Safety Executive; any other relevant statutory authorities, HMRI; Competent Person (ROGS); Network Rail; Police; Fire and Rescue Services; Ambulance Service; and all applicable Law;
- Proposed Safety Initiatives;
- How the Infraco proposes that a safety culture shall be cascaded and enforced throughout the team including with Sub-Contractors;
- Infraco proposals for how safety shall be incentivised throughout the team, including with Sub-Contractors;
- The emergency procedures which the Infraco propose to implement;
- Details of how the Infraco shall implement accident and incident reporting and promotion of an open culture;
- The Infraco's safety inspection & safety tour regime;

- An outline of the Infraco's procedures relating to safety for compliance with **tie**'s Drugs & Alcohol Policy and procedures and details of the Infraco's own similar policy and procedures;
- Details of any particular safety issues the Infraco considers would be significant and initial mitigation measures the Infraco considers necessary;
- Commissioning of the Edinburgh Tram Network;
- Driver Training on the Edinburgh Tram Network;
- Maintenance of the Edinburgh Tram Network.

17.2.2 Occupational Health & Safety Management System

The Infraco shall adopt an occupational health & safety management system consisting of the implementation and use of those processes and procedures referenced in BS 8800, OHSAS 18001-2007 and/or HSG 65 (Successful H&S Management).

17.2.3 Project Health & Safety Plan and Health & Safety File

The Infraco shall develop a construction phase plan and supply all necessary information for the Project Health & Safety File in accordance with the Construction (Design and Management) Regulations 2007 and L144 Managing Health and Safety in Construction and as described in the pre-construction information. The construction phase plan shall require to be submitted in accordance with the Review Procedure.

17.2.4 Interface with tie's Safety Systems

The Infraco shall ensure that the management system for the Infraco Works is developed to ensure that it aligns with the requirements of the Tram Project Safety Policy Statement (DEL.HSQE.105). Section 32 of the Agreement contains the Project Safety (and Quality) Interface Document. The Infraco shall be required to comply with the requirements of this document including the completion of forms and other systems in order to assist **tie** in complying with **tie**'s own safety and quality management systems.

17.2.5 System Safety Management Plan (SSMP)

The Infraco shall be responsible for the development of the SSMP.

The SSMP shall define the engineering process that shall ensure, and provide a record of, assurance that the tramway has achieved an acceptable level of performance. This is achieved through a staged "case for safety" submission (refer below) process to signify that safety has been engineered into the design of the Edinburgh Tram Network. The SSMP shall define the process, activities and requirements for the preparation for a "case for safety" at the relevant design stage. The SSMP shall also define the system safety management organisation and the strategy to achieve the individual hazard system safety targets. The SSMP is concerned with only with those hazards that could give rise to an increased level of risk to passengers, staff and the general public from the operating system. (All health and safety hazards related to the risk to workers, staff and the general public from the construction activities should be covered under the safety management plan.)

17.2.6 The Railways and Other Guided Transport Systems (Safety) Regulations 2006

The Edinburgh Tram Network shall be delivered in accordance with The Railways and Other Guided Transport Systems (Safety) Regulations 2006 (ROGS).

The Infraco shall design and execute the Infraco Works using safety management and procedures to demonstrate that the Edinburgh Tram Network is safe to introduce into service as defined by the Safety Management System under ROGS. This shall also include the development of the Case for Safety to the satisfaction of the Competent Person and the Project Safety Certification Committee. These aspects form an integral part of the design of the Edinburgh Tram Network and are detailed in this section of these Employer's Requirements.

The Infraco shall undertake all Infraco Works in accordance with the written safety verification scheme requirements prepared by **tie**. Safety verification will be undertaken by **tie**. The Competent Person shall assure the process and its outputs. The Infraco shall allow **tie** and the Competent Person access to undertake safety verification activities, such as system safety audits. The Infraco shall develop a safety management system for when the Edinburgh Tram Network is operational which complies with the requirements of ROGS and other relevant legislation to the satisfaction of the Competent Person and **tie/TEL**.

Whilst there is no requirement in ROGS for projects such as the ETN to be notified to or given prior consent or approval by HMRI, HMRI have been involved in the development of the Edinburgh Tram

Network scheme to date and it is **tie**'s intention to continue this involvement. The Infraco shall assist **tie** in any liaison with the HMRI when requested to do so.

17.2.7 Health and Safety Management

The health and safety responsibilities and CDM/ROGs application are defined in the matrix below for each phase of the project.

Table 41 – Matrix showing Contractual Responsibilities – Health & Safety Management

			Infraco				Revenue services	
RESPONSIBILITIES	**MUDFA**	**Pre Novation Design**	**Post Novation Design**	**Construction / Installation**	**Commissioning / Test running ***	**Shadow running**	**Operation**	**Maintenance.**
tie Ltd.	CDM Client.	CDM Client. **ROGS duty holder.**	CDM Client. **ROGS duty holder.**	CDM Client. **ROGS duty holder.**	CDM Client. **ROGS duty holder. ****	- **ROGS duty holder. ****	-	-
Transdev.		Adviser to **tie**.	Adviser to **tie**.	Adviser to **tie**.	Driver training. Inputting into hazard log.	Operator of tram system. Inputting into hazard log.	Operator of tram system.	-
SDS	Designer.	Designer. Managing hazard log.	Designer. Inputting into hazard log.	-	-	-	-	-
MUDFA contractor.	Principal contractor	-	-	-	-	-	-	-
Infraco.	-	-	Design manager. Managing hazard log.	Principal contractor. Managing hazard log.	Principal contractor. Managing hazard log.	-	-	Contractor/Principal contractor. Maintainer–infrastructure.
Tramco.	-	-	Designer. Inputting into hazard log.	Contractor. Inputting into hazard log.	Contractor. Inputting into hazard log.	-	-	Maintainer–vehicles.
TEL.	-	-	-	-	-	-	**ROGS duty holder.**	CDM Client.
CEC.	-	-	-	-	-	-	-	-Maintainer - roads
REGULATIONS								
CDM Regs	Yes – Construction Phase Plan, Residual Risk Register. Health & safety file initiated.	Yes – Pre-construction information, Residual Risk Register. Health & safety file progressed.	Yes – Pre-construction information, Residual Risk Register. Health & safety file progressed.	Yes – Construction Phase Plan. Health & safety file progressed.	Yes – Construction Phase Plan. Health & safety file completed & handed over to TEL.	No – no longer construction work.	No.	Yes – where maintenance works are "construction works". (Notifiable works last more than 30 days or 500 man days).
ROGS Regs	No.	Yes – Safety Verification Scheme. Appointment of Independent Competent	Yes – Safety Verification Scheme. NoNOs from ICP.	Yes – Safety Verification Scheme. NoNOs from ICP.	Yes – Safety Verification Scheme + Safety Management System. NoNOs from ICP.	Yes – Safety Verification Scheme + Safety Management System. Final NoNO from ICP.	Yes – Safety Management System.	Yes – Safety Management System.

		Person (ICP).						
SAFETY MANAGEMENT SYSTEMS								
Safety Management Systems	AMIS SMS – construction. SDS SMS – design.	**tie** SMS – safety verification. SDS SMS - design.	**tie** SMS – safety verification. Infraco SMS – design management. SDS SMS – design. Tramco SMS – design.	**tie** SMS – safety verification. Infraco SMS – construction/installation Tramco SMS – manufacture/installation.	**tie** SMS – safety verification. Infraco SMS – installation/operation. Tramco SMS – installation. Transdev SMS – operation.	**tie** SMS – safety verification. Infraco SMS - operation. Transdev SMS – operation.	TEL SMS. Transdev SMS - operation.	TEL SMS. Infraco SMS – maintenance. Tramco SMS – maintenance.

* The project moves into this stage in phases once key milestones have been achieved e.g. the energisation of the OLE within the depot.

** This is flexible. TEL may assume the role of **ROGS duty holder** during this phase.

KEY

Responsibilities under the CDM Regulations

Responsibilities under the ROGS Regulations

17.3 Environmental Management

17.3.1 Environmental Management System

The Infraco shall adopt an environmental management system consisting of the implementation and use of those processes and procedures referenced in ISO 14001.

Documentation developed to meet the requirements of the environmental management system shall be submitted in accordance with the Review Procedure.

The Infraco shall ensure that the management system for the Infraco Works is developed to ensure that it aligns with the requirements of the Tram Project Environmental & Sustainability Policy Statement (DEL.HSQE.101).

17.3.2 Environmental and Sustainability Action Plan

The Infraco shall submit and maintain an Environmental & Sustainability Action Plan (EAP). This shall be based on SDS Environmental Mangement Plan and shall cover environmental issues for the duration of the Infraco Works, including design and construction stages. It shall describe the management process, procedures and interface requirements associated with meeting the Infraco's environmental responsibilities.

It shall then develop in detail the potential impacts on environmental resource, mitigation measures and responsibilities associated with all stages of the Infraco Works.

The EAP shall be prepared using the following sources of information.

- the Environmental Statements;
- The Design Manual;
- The Noise and Vibration Policy as contained within the Code of Maintenance Practice;
- The Code of Construction Practice;
- The Landscape and Habitat Management Plan for the Roseburn Corridor;
- The Badger Mitigation Plan for the Roseburn Corridor;
- Agreements made with statutory bodies; and

- Parliamentary agreements.

The EAP shall be amended by the Infraco to reflect any changes to the tramway design or engineering solutions and the results of surveys..

17.3.3 Construction Environmental Management Plan (CEMP)

The Infraco shall prepare a construction environmental management plan (CEMP) including method statements, as necessary, to convey the required level of information during the construction stage of the Infraco Works.

Site specific EMPs shall be prepared for each geographical section and intermediate geographical section as appropriate. These plans shall be produced by the Infraco prior to any works commencing on Site and must be reviewed by **tie** before work starts. The site specific EMPs must separately address the following sites and/or issues:

- Site accommodation, compound and offices and storage areas;
- Site clearance;
- Geographical sections and intermediate geographical sections of the Tram route;
- The Depot;
- Structures, such as sub-stations not already included in the above; and
- Road, cycleway and footway works, including drainage, signage and lighting.
- A series of site specific and topic related EMPs shall also be produced by the Infraco that shall address all the environmental issues, landscape, ecology etc. These shall cover the general control and protection measures for each topic as it relates to each of the site specific sections in the plan area. The Infraco shall have responsibility for the production, content and implementation of the Site Specific EMPs.
- The Infraco shall submit to **tie** the site specific EMPs 8 weeks prior to the commencement of the relevant section of the Infraco Works.

- **tie** shall comment on the plan(s) submitted, in accordance with the Review Procedure and agree the final plans prior to the commencement of any work on the relevant section or activity.

17.3.4 Requirement of Site Specific EMPs

The Infraco shall develop the site specific EMPs to include the following details:

- **A description of the works to be undertaken**
  - List of all separate work activities that fall within the scope of the works.
- **A detailed programme of the construction activities**
  - Proposed dates and sequence of the works (showing how environmental impacts are affected by potential changes to the Programme);
  - Details of proposed normal working hours and intended start up and close down times; and
  - Outline of any works which may require construction activities outside of normal working hours.
- **Location of the works, including a site plan, showing construction site boundaries**
  - This shall show the position of plant and position of any sensitive receptors e.g. watercourses, local residents, etc.
- **Personnel access routes/points**
  - Location plan of each access route/point;
  - List of activities for which each access point is to be used
- **Vehicular access routes/points**
  - Location plan of each access route/point;
  - List of activities for which each access point is to be used
- **Equipment and plant to be used (including type, make and expected number)**
- **Method of delivery/removal of materials and plant**

- **Details of proposed site accommodation**
- **Details of how public right of way and access to property will be retained and managed**
  - A list of Consents/permissions obtained or to be obtained for the works
- **External Consultation**
  - A list of those notified of the works and the date notified
  - A list of proposed notifications and dates
- **Significant environmental impacts relating to each activity.**
  - (This should draw upon the definitions of significant impacts used in the Environmental Statement).
- **Significant environmental risks relating to each activity.**
- **Receptors which are likely to be affected by the works.**
- **On-site mitigating measures for each impact and risk.**

These will be transferred onto site management statements which will briefly state the key risks and mitigating measures which have been agreed. The site management statement will be attached to the construction method statement for the works to ensure that it is brought to the attention of all site staff. The Site Management Statement will be briefed out to all site based staff as a toolbox talk.

- **Monitoring proposals that shall include:**
  - The receptors for which monitoring will be undertaken;
  - Frequency of monitoring;
  - Factors against which the monitoring results will be analysed;
  - Threshold levels;

- Timescales within which results will be analysed;
- List of organisations/individuals to whom results will be distributed; and
- Actions to be taken in the event that thresholds are breached.

17.3.5 Permits to Work

Prior to being granted access to commence construction works, the Infraco shall complete and submit to **tie** for its autorisation, the required Permits to Work.

Further details of the Permits to Work process are included within the Code of Construction Practice, the Project Safety & Quality Interface Document and Section 39 of the Employer's Requirements.

18 Cabling and Ducting

This Section sets out the requirements with the Infraco must comply with in relation to cabling and ducting.

18.1 Cabling

All cables must be mechanically protected such that they cannot be accessed by the public without using tools to remove separate mechanical protection.

Cables and associated supports must be rated such that neither the cables nor the supports degrade due to thermal or mechanical stress during their design life.

Cables must operate satisfactorily under all foreseeable fault, and loading conditions.

Cables must operate satisfactorily under all foreseeable environmental conditions. This must include the effects of sunlight, dampness, temperature, and exposure to water. Cables must be selected to recognise risk that they may be submerged in water.

Cables must be designed to last for the durations that are set out in Table 22 - Equipment Design Life.

Cable terminations must not impose any stress on the cables, and sufficient spare length must be provided in all cables to permit foreseeable maintenance and repair work.

Cables must be identified in accordance with requirements agreed with **tie**.

Where joints in cables are required, and cannot be reasonably avoided, they must be located in draw pits and identified on the as-built drawings. Joints in draw pits must be both suitably supported and accessible. This may require draw pits that are larger than normal size to be used to contain cable joints.

All cables in all draw pits will be identified with a suitable label.

18.2 Ducts

Spare ducts shall be provided on all duct routes as follows:

Number of ducts in cable route	Minimum number of spare (unused) ducts	Minimum size of spare duct
2	0	N/A
3 or more	20% of the number of ducts	Maximum size of used ducts

Table 42 – Ducts

All ducts, and all individual ducts in banks of ducts, must contain draw ropes of sufficient mechanical integrity to enable additional new or replacement cables to be pulled through the duct.

All ducts, including ducts that are installed but not used for cables, must be free from debris and free from obstructions.

All installed ducts, including ducts that are installed but not used for cables, must not be crushed. All internal dimensions of the duct as built must never less than 90% of duct's nominal dimensions.

Ducts must be provided with drainage that is integrated with the specification of the cables used such that there is no foreseeable risk of degradation from any water that may be in the ducting system.

Ducts must be of sufficient mechanical integrity to protect both themselves and the cables contained in the ducts from all foreseeable damage, degradation and vandalism.

The bending radii of ducts must be integrated with the requirements of the cables to be installed such that the cables can be installed, replaced and terminated without damage.

Ducts must be provided in sufficient number and size to ensure that there is no degradation in the cables due to thermal effects or chafing of cables. It shall be possible to remove and replace any individual cable in the ducting system without the need to remove or significantly disturb any other cables from the system.

Cable ducts shall be installed with appropriate warning arrangement to anyone who may be undertaking excavation work that may damage the ducts. This may be achieved by the installation of plastic warning tape in the ground above the ducts.

Where cables are installed in segregated parts of the tramway, they shall not be installed in cable troughs unless specifically agreed by **tie**. Any proposals for the use of cable troughs must include:

- Locked lids or equivalent to minimise the risk of vandalism and/or theft;
- Where cable troughs form part of the walkway along the tram route, a proven design of locked lids that will eliminate any rocking of the lids must be used; and
- Troughs must be secured against any lateral movement.

For the avoidance of doubt, where cable troughs form part of a structure, the above requirements still apply.

Where ducts are used on the off street tramway, these are preferred to be placed under the walkway with draw pit covers forming part of the walkway.

Any slipping and/or tripping hazards associated with draw pits that are located in a walkway must be eliminated.

Some cables terminate in equipment on ballasted track. These include:

- traction return bonding connected to the rails;
- connections to loops; and
- possibly some connections to some Point Position Indicators.

These cables are to be installed such that the risk of damage to the cables due the activities of track maintenance equipment, vandalism and people walking on the track is minimised.

18.3 Duct Chambers and Draw pits

Duct chambers must be structurally sound and built to the requirements of the cabling network as specified in this section 18.

The design of the location of draw pits must such that they can be safely accessed without stopping the operation of the tramway or requiring a road closure, unless specifically agreed by **tie**.

The integration of draw pit covers into the surfacing in the surrounding area shall be included in the design. This will include the orientation and the surfacing of the cover.

Draw pit covers will be of a family, such that the number of different keys needed to lift draw pit covers is minimised.

The Infraco shall provide sufficient draw pit keys and access equipment to adequately operate and maintain the system.

18.4 Cable separation

Sufficient separation between cables must be provided in order to:

- ensure that any risk of damage to the insulation of the cables that could cause potential risks of energising other circuits is minimised. All cables carrying +750V dc must not be in physical contact with any other cables unless the cables are permanently bonded together,
- ensure that electromagnetic compatibility between cables is provided, and
- permit access to cables and any essential cable joints for maintenance purposes

18.5 Other requirements

Where cables are installed inside conducting items that are not earthed, such as OLE poles, the insulation and the mechanical protection of the cables must be sufficient to mitigate any associated hazards.

As built drawings will accurately identify:

- the cables that are contained in each duct, to aid cable location and fault finding; and
- the location of all draw pits and all duct runs.

19 Cabinets

This Section 19 sets out the requirements which the Infraco must comply with in relation to cabinets and the environmental conditions as defined in Section 3.6.4.

Cabinets, cubicles and equipment housings will be required in the following instances as a minimum:

- To house communications equipments at the Tramstops;
- To house SCADA equipment within substations;
- To house radio equipment at base stations; and
- To house points control, points indicator control, points heaters and Tram control equipment at rail junctions.

All cabinets that are located externally shall meet the following requirements:

- They shall provide an ingress protection rating of 55 (BS EN 60529 Specification for Degrees of Protection Provided by Enclosures) as a minimum;
- They shall be coated with materials that inhibit graffiti and assist with its removal;
- Equipment housing, enclosures, cable routes etc. shall allow for an increase of temperature caused by the equipment, whereby the housing itself shall not cause any harm to the functionality of the equipment or the temperature reached at the surface of the enclosure
- All cabinets shall provide an entry for cabling, with no cables visible or accessible without opening the cabinet;
- All cabinets are provided with a robust lock, satisfying the **tie** lock suiting requirements set out in these Employer's Requirements;
- The cabinet doors shall be equipped with a multi point locking mechanism that complies with the Edinburgh Tram Network security locking policy;
- In the event of the equipment cabinets being opened, an alarm shall be transmitted to the Supervisory Control and Data Acquisition system so that staff in the Control Centre can be alerted;

- The equipment contained within the cabinets shall be of a modular construction that shall allow rapid replacement should that become necessary;

- When the cabinet doors are open, they do not obstruct tramway operation, road vehicles, passengers or other members of the public; and

- Work can be carried out safely on the contents without affecting tramway operations or requiring temporary traffic management.

In addition, those cabinets located at Tramstops shall be designed to integrate visually with the Tramstop furniture. The external colour and appearance of the cabinets, shall match and complement the architectural finishes and materials of the structures of the Tramstop where the cabinet is to be mounted.

20 NOT USED

21 Utilities / MUDFA

Where Infraco is instructed by a **tie** Change to carry out utilities diversions, relocation or protective works to deliver the Edinburgh Tram Network the following shall apply.

The philosophy adopted for the MUDFA Works is to clear the ground of utilities such that the track can be installed in ground that has no live utilities within it. The MUDFA Works considers utilities that lie below the area of land that is described by the tram's DKE. It is assumed that the width of ground needed for the construction of the track slab is no more than the width of the tram's DKE.

Where utilities lie below 1200mm from the surface, they are left in-situ.

Where utilities occupy ground that is within 600mm of the existing road surface, they are removed and replaced.

Where utilities lie between these two limits, they are considered on a case by case basis. Generally, utilities that cross the tramway are protected (sleeved for example) and left in position. Where utilities run along the tramway, they are diverted and placed outside the tram's DKE.

Special arrangements are made for major utilities such as the HV cables and the service tunnel along Leith Walk.

Schedule 46 details specific locations and utility types which shall be either left in situ or be diverted by Infraco as a **tie** Change. Where utilities' scope decisions and responsibilities fall outside this schedule Infraco and tie shall jointly agree the most appropriate party (either MUDFA or Infraco) to undertake the diversion works.

The generic allocation of responsibility for relocating utilities is set out in Section 21 of these Employers Requirements. Infraco will only be responsible for relocating such utilities after receiving a **tie** Notice of Change instructing such relocation.

Tie will obtain designs for all utility diversion works and issue them to Infraco.

Infraco shall deliver the utilities diversion works instructed in accordance with designs provided.

Infraco shall ensure that the Programme as amended in accordance with Clause 80 contains adequate allowance for these utility diversion works.

Infraco responsibilities in respect of utilities diversions instructed as a **tie Change** shall also include:

1. Where diversion works are to be delivered by Statutory Utilities (SUs) supporting tie in the development and agreement of utilities diversions works package agreements with the SUCs. Such support mean supporting tie and providing all necessary information to enable tie to negotiate contracts for diversion works with SUCs, assembling and checking work package agreements, defining detailed scope, providing constructability advice and agreeing programme of works with SUC's and co coordinating such so that impact on programme for delivery of the Infraco Works is minimised, agreeing construction and delivery methodologies with SUCs, finalising the scope of Utilities diversion works and the boundary of responsibility between work to be delivered by Infraco and that of SUCs.
2. Providing all enabling, traffic management requirements, ancillary building, civil engineering, electrical and mechanical works in connection and all attendances required to enable SUCs to carry out and complete their works.
3. Coordinate the works of SUCs with each other and with that of the Infraco.

Service	Description	MUDFA SCOPE	INFRACO SCOPE	NOTES

Service	Description	MUDFA SCOPE	INFRACO SCOPE	NOTES
Water	Connections	Connections to new mains will be required before old main can be decommissioned. This is part of the advance diversion scope of MUDFA.	If any connections are missed by MUDFA and subsequently identified by Infraco, they must be carried out at the time of Infraco. However, this risk is small as missed connections would usually lead to immediate customer complaints when the old service was decommissioned.	Note that this is not intended to be the primary mitigation of this risk: site investigation and planning should ensure that connections are identified and dealt with by MUDFA.
	Diversion (other than 800mm at Depot)	Part of the advance diversion scope of MUDFA.	If any apparatus is discovered by Infraco that was not identified at the time of the utility advance diversion works, the diversion must be carried out by (or at the same time as) Infraco. Extensive site investigation has been carried out to reduce this risk, but it cannot practically be eliminated.	
	Diversion of 800mm at Gogar Depot.	Part of the advance diversion scope of MUDFA.	If any apparatus is discovered by Infraco that was not identified at the time of the utility advance diversion works, the diversion must be carried out by (or at the same time as) Infraco.	There is little, if any, risk of encountering any other water service in the Gogar Depot area that has not been dealt with by MUDFA.
	External Protection	Part of the advance diversion scope of MUDFA.		Long longitudinal protection would not be acceptable for water mains

Service	Description	MUDFA SCOPE	INFRACO SCOPE	NOTES
	Insurance Pipes	Part of the advance diversion scope of MUDFA.		

Service	Description	MUDFA SCOPE	INFRACO SCOPE	NOTES
Waste water	Diversions and manhole construction	Part of the advance diversion scope of MUDFA.	If any apparatus is discovered by Infraco that was not identified at the time of the utility advance diversion works, or where the designs of works have been unable to be sufficiently progressed prior to MUDFA vacating the Work Sections, the diversions must be carried out by (or at the same time as) Infraco. Extensive site investigation has been / will be carried out to reduce this risk, but it cannot practically be eliminated.	Sewer design and agreement with SUC (Scottish Water) regarding treatment required to existing sewers is not currently complete and the programmed completion of the telecoms cabling works is such that existing services cannot be abandoned to allow the manhole and sewer construction works to be undertaken for significant periods of time after all the ducts and other utility diversions are complete. This may result in sewer diversion works to be undertaken after all other MUDFA programmed works in Work Sections are complete. Works may be undertaken by either MUDFA or Infraco.

Service	Description	MUDFA SCOPE	INFRACO SCOPE	NOTES
	Internal Refurbishment	Part of the advance diversion scope of MUDFA.		
	External protection	Where crossing or short longitudinal - part of the advance diversion scope of MUDFA.	Where long longitudinal: would be relatively easy to incorporate into Infraco - for a section, excavation would be deeper with (e.g.) concrete placed - this would avoid double excavation by MUDFA and Infraco.	
	Connections to new sewers	Connections to new mains will be required before old main can be decommissioned. This is part of the advance diversion scope of MUDFA.	If any connections are missed by MUDFA and subsequently identified by Infraco, they must be carried out at the time of Infraco. However, this risk is small as missed connections would usually lead to immediate customer complaints or evidence of flooding when the old service was decommissioned.	This is not intended to be the primary mitigation of this risk: site investigation and planning should ensure that connections are identified and dealt with by MUDFA.
	Existing connections	An existing connection to an existing (and left in place) sewer may have to be repositioned. This would be part of the advance diversion scope of MUDFA.	A connection may not be identified at the time of MUDFA, and uncovered by Infraco. The connection must be repositioned at the time of Infraco.	

Service	Description	MUDFA SCOPE	INFRACO SCOPE	NOTES
	Manhole access level change (eg raise height of access cover)	St Andrews Square and North & South St Davids Street will be undertaken by MUDFA as part of the road realignment and construction works required to accommodate the proposed Traffic Regulation Order (TRO).	Manhole access level changes must be adjusted at the time of Infraco. Manhole lids to be flush with the finished road surface.	It will also mean that new manholes installed by MUDFA may have to be modified by Infraco.
	New Gully connections	St Andrews Square and North & South St Davids Street will be undertaken by MUDFA as part of the road realignment and construction works required to accommodate the proposed Traffic Regulation Order (TRO).	Infraco shall install road gulleys. These will have to be installed at the same time as the road construction is carried out.	If a new road gully is required at a place where the road level is not to be changed, MUDFA could install it. However this situation is unlikely, and for consistency and avoidance of confusion Infraco should probably do all of this.

Service	Description	MUDFA SCOPE	INFRACO SCOPE	NOTES
Telecoms	Protect	Where crossing or short longitudinal - part of the advance diversion scope of MUDFA. Where long longitudinal: would be part of the advance diversion scope of MUDFA allowing Infraco a "clear run". However would necessitate double - excavation of a long length of the tram foundation area.		Where long longitudinal: would be relatively easy to incorporate into Infraco - for a section, excavation would be deeper with (e.g.) concrete placed - this would avoid double excavation by MUDFA and Infraco*.
	Slew/Lower	Part of the advance diversion scope of MUDFA.	If any apparatus is discovered by Infraco that was not identified at the time of the utility advance diversion works, the diversion must be carried out as Infraco Works. Extensive site investigation has been carried out to reduce this risk, but it cannot practically be eliminated.	

Service	Description	MUDFA SCOPE	INFRACO SCOPE	NOTES
	Divert (inc manhole construction)	Part of the advance diversion scope of MUDFA.	If any apparatus is discovered by Infraco that was not identified at the time of the utility advance diversion works, the diversion must be carried out as Infraco Works. Extensive site investigation has been carried out to reduce this risk, but it cannot practically be eliminated.	
	Insurance Ducts	Part of the advance diversion scope of MUDFA.		
	Manhole access level change (eg raise height of access cover)	St Andrews Square and North & South St Davids Street will be undertaken by MUDFA as part of the road realignment and construction works required to accommodate the proposed Traffic Regulation Order (TRO).	Manhole access level changes must be adjusted at the time of Infraco. Manhole lids to be flush with the finished road surface.	This will also mean that new manholes installed by MUDFA may have to be modified by Infraco.

Service	Description	MUDFA SCOPE	INFRACO SCOPE	NOTES
Gas	Divert	Part of the advance diversion scope of MUDFA.	If any apparatus is discovered by Infraco that was not identified at the time of the utility advance diversion works, the diversion must be carried out as Infraco Works. Extensive site investigation has been carried out to reduce this risk, but it cannot practically be eliminated.	
	Protect	Part of the advance diversion scope of MUDFA.		Long longitudinal protection would not be acceptable for gas mains
	Insurance Pipes	Part of the advance diversion scope of MUDFA.		
	Connections	Connections to new mains will be required before old main can be decommissioned. This is part of the primary scope of MUDFA.	If any connections are missed by MUDFA and subsequently identified by Infraco, they must be carried out as part of Infraco Works. However, this risk is small as missed connections would usually lead to immediate customer complaints when the old service was decommissioned.	This is not intended to be the primary mitigation of this risk: site investigation and planning should ensure that connections are identified and dealt with by MUDFA.

Service	Description	MUDFA SCOPE	INFRACO SCOPE	NOTES
Electricity	Divert	Part of the advance diversion scope of MUDFA.	If any apparatus is discovered by Infraco that was not identified at the time of the utility advance diversion works, the diversion must be carried out as part of Infraco Works. Extensive site investigation has been / will be carried out to reduce this risk, but it cannot practically be eliminated.	
	Protect	Where crossing or short longitudinal - part of the advance diversion scope of MUDFA.	Where long longitudinal: would be relatively easy to incorporate into Infraco - for a section, excavation would be deeper with (e.g.) concrete placed - this would avoid double excavation by MUDFA and Infraco.	Where long longitudinal: would be part of the advance diversion scope of MUDFA allowing Infraco a "clear run". However would necessitate double - excavation of a long length of the tram foundation area.
	Insurance ducts	Part of the advance diversion scope of MUDFA.		

Service	Description	MUDFA SCOPE	INFRACO SCOPE	NOTES
	Domestic + Business connections	Connections to new cables will be required before old cable can be decommissioned. This is part of the primary scope of MUDFA.	If any connections are missed by MUDFA and subsequently identified by Infraco, they must be carried out as part of Infraco Works. However, this risk is small as missed connections would usually lead to immediate customer complaints when the old service was decommissioned.	This is not intended to be the primary mitigation of this risk: site investigation and planning should ensure that connections are identified and dealt with by MUDFA.
Street Furniture (eg street lighting, traffic lights, lighted bollards, bus stops, etc)	Existing power & telecoms Divert	St Andrews Square and North & South St Davids Street will be undertaken by MUDFA as part of the road realignment and construction works required to accommodate the proposed Traffic Regulation Order (TRO).	All existing power and telecoms diversions required must be carried out by (or at the same time as) Infraco. Depth of cover and the final road infrastructure alignment and construction to be finalised by and carried out by Infraco.	Extensive site investigation has been / will be carried out to reduce this risk, but it cannot practically be eliminated.
	Protect	St Andrews Square and North & South St Davids Street will be undertaken by MUDFA as part of the road realignment and construction works required to accommodate the proposed Traffic Regulation Order (TRO).	All existing power and telecoms diversions required must be carried out by (or at the same time as) Infraco. Depth of cover and the final road infrastructure alignment and construction to be finalised by and carried out by Infraco.	.

Service	Description	MUDFA SCOPE	INFRACO SCOPE	NOTES
	New connections	For future street furniture, appropriate ducting would be installed by MUDFA where (1) design details are available sufficiently in advance, (2) the road/tram alignment is formally finalised and (3) the future ground levels are such that new ducts can be buried beneath the existing ground level, without either excessively deep excavation or inadequate (or no) cover.	Where design is not available in time for MUDFA, or where future road levels do not facilitate advance installation, duct installation work must be carried out as part of Infraco Works.	
Other	SP transmission cables	If the design agreed with Scottish Power requires external protection beyond that provided by the track slab in that area, and if the design is available in good time, then MUDFA could undertake these works if required.	Infrastructure design will have to take account of the specific requirements to avoid diverting these cables. This will include special track slab construction (for Leith Walk) and careful bridge abutment/pier design (for 3 other areas). Should this design be impossible, the diversion work would be carried out by Scottish Power directly.	This would not be possible before 2008 (at the time of writing; lead time requires a notification before October in one year for work in the summer of the following year). Consultation between utilities and infrastructure design teams should facilitate this design.

Service	Description	MUDFA SCOPE	INFRACO SCOPE	NOTES
	BT cables at A8 by Gogar		Infrastructure designs shall take account of the specific requirements to avoid diverting these cables.	This may include a deeper excavation for the tunnel under the A8 than had previously been envisaged, plus provision of temporary support for the cables during the construction of the tunnel. Should this design be impossible, the diversion work would be carried out under MUDFA terms and conditions. Consultation between utilities and infrastructure design teams should facilitate this design. Trial holes have been undertaken on behalf of BT to confirm the depth of the existing cables – the initial, informal, impression from BT is the cables are higher than anticipated which indicates the cables may not require diversion but incorporation into the infrastructure design.

Service	Description	MUDFA SCOPE	INFRACO SCOPE	NOTES
	BT cables at Roseburn street		Infrastructure design will have to take account of the specific requirements to accommodate these cables. Infraco shall consider the design solution for cabling installation as part of the Infraco Works.	This will include careful bridge abutment/pier design. The cabling element of this work is to be carried out by BT following diversion works, and may impact on the Infraco programme. Consultation between utilities and infrastructure design teams should facilitate this design. Note: a design solution for the cables as part of the Infraco works has been agreed with BT.
	Utility work dependent on prior structures work, eg cables in bridge decks		Will require structures work to be completed before utility work can be started. Infraco shall complete any and all utility diversions, utility protections works etc. including design (by SDS) following (or at the same time as) the Structures are completed.	

Table 42a – Table showing the responsibility for diversion/protection work on the utilities for the Edinburgh Tram project

22 Locks and Key Suiting

22.1 General

The Edinburgh Tram Network will have many locks installed to provide a suitable level of secure access to equipment and rooms. The locks and keys used shall be integrated into appropriate key suiting families. The philosophy is to strike an appropriate balance between the following two extremes:

- A single fully integrated key suiting arrangement for the whole of the Edinburgh Tram Network;
- No suiting, with every lock needing a different key;

The Infraco shall propose key suiting arrangements that are subject to approval by **tie**. In developing the proposals, Infraco shall consider:

- The need for staff to be able to undertake their duties without having to carry large numbers of keys with then to access the places that their duties require;
- Future expansion of the Edinburgh Tram Network;
- Changes to the key suiting that are likely to be needed as the system matures, and any key suiting must bear be sufficiently flexible to enable such changes to be made; and
- The ongoing costs of providing keys to staff during the life of the Edinburgh Tram Network;

22.2 Key Suiting System

A key suiting system that is based by the Infraco on the following is likely to be acceptable to **tie**.

A stand alone suite of keys, hierarchically structured to provide access to equipment such as:

The suiting documentation will list all locks to be installed on the Edinburgh Tram Network, including any locks that are not proposed to be included in the suites. There should be 4 completely separate suiting systems, as set out below:

22.2.1 Tram

- The Infraco shall procure all keys that are required for operating each tram. It is anticipated that each tram driver will need to carry no more than two keys for each Tram in order to undertake their duties. One key would permit access onto the tram, into the cab, and enable the Tram to be driven. The second key would open any panels that the driver may need to access and may also provide for such tasks as locking doors out of use;

- A different key would permit staff such as cleaners to access the inside of the Tram and the Tram cabs, but would not enable the Tram to be driven;

- Tram Maintenance staff may also need additional keys to access sensitive or potentially dangerous equipment.

22.2.2 Substations and Power

A stand alone suite of keys, hierarchically structured to provide access to equipment such as:

- Isolator cabinets, to check the position of isolators and to fit isolation padlocks;

- Substation LV areas;

- Substation HV areas in substations;

- Isolators, to permit hand operation;

- Equipment within the substations may also have a multitude of locks that may be suited, depending on the Infraco maintenance philosophy.

Separate individual locks with a single key will be used for securing isolations. There will be no suiting whatsoever for these.

22.2.3 Depot and buildings

A stand alone suite of keys, hierarchically structured to provide access at doors in the Depot building and other buildings in the Depot area such as the Depot plant building. A low level key in this structure could be used for any trackside gates that are required along the alignment.

22.2.4 Signalling and Communication Equipment

A stand alone suite of keys, hierarchically structured, to provide access to all trackside cabinets, including:

- Points control;
- Points heating;
- Signalling and;
- Tramstop.

Isolator cabinets are substations are excluded from this suite because they are included in the substations and power suite of keys.

23 Testing and Commissioning

23.1 Systems Acceptance

23.1.1 Scope

This section of the Employer's Requirements is to define the systems acceptance requirements applicable to the Edinburgh Tram Network (ETN) which the Infraco must comply with.

23.1.2 General Description and Principles

The process for acceptance of the Edinburgh Tram Network set out in this document is designed to ensure that the ETN is delivered in an acceptably safe, compliant, and efficient manner. The objectives of the process are to ensure that system performance, integrity, reliability, availability, and safety are rigorously tested and that throughout all stages of the delivery process the many sub-systems and the overall System are validated and verified against **tie**'s requirements and applicable standards. The detailed sequence and scope of infrastructure testing and commissioning prior to System Acceptance Testing shall be programmed out and proposed by the Infraco.

The acceptance process is heavily dependent on the delivery of the planned service timetables, the Operational Timetable (see 2.8 of these Employer's Requirements) and the Enhanced Timetable (see 2.8 of these Employer's Requirements). Details regarding the tram service frequency, number of trams and the phased opening of the Edinburgh Tram Network are contained in 2.8 of these Employer's Requirements.

Pre-system acceptance testing includes both Factory Acceptance Tests (FATs), Site Acceptance Tests (SATs), Sub-system Integration Tests (SITs) and System Commissioning Tests (SCTs).

Once a Section of the ETN is physically completed and the System Integration Tests are satisfactorily completed then the formal acceptance process requires the Infraco to carry out and pass a series of System Acceptance Tests (SATS) in order to achieve Sectional Completion. These tests are:

Table 43 - Description of the Acceptance Tests

Test	Test Name	Test Description	Programme
T1	Post Commissioning Test	The test shall demonstrate and prove that each Section of the ETN in sequence is able to perform in an acceptably safe manner and deliver the required run times. Please refer to relevant section below. This is the gateway test to driver training.	Post Commissioning Test will immediately follow the successful commissioning of the nominated section and is a requirement for progressing into the Driver Training.
T2	Performance Test 1	After Section D has passed Test T1 then this test shall demonstrate and prove that Phase 1a of the ETN is able to perform satisfactorily to move into the three-month Shadow Running period. Please refer to relevant section below. This is the gateway test to shadow running.	Performance Test 1 will immediately preceed the Shadow Running period and is a requirement for progressing to this phase of the programme.
T3	Pre-operations Test	The test shall cover a seven day period during the latter part of the Shadow Running phase of the programme. The Test is the operation of the initial entry into service timetable and includes infrastructure, trams, and operations systems – Please refer to relevant section below.	Pre-operations Test shall immediately precede the Service Commencement Date.
T4	Network Performance Test	The Test shall be carried out over a 28 day period in Passenger Service to establish that the ETN can reliably operate the Operational Timetable – please refer to Please refer to relevant section below.	To be completed within twelve months of the Service Commencement Date.
T5	Network Reliability Test	Reliability Testing of certain sub-systems in Passenger Service – please	To be completed within twelve months of the Service

		refer to Please refer to relevant section below.	Commencement Date.

The Post Commissioning Test (T1), Performance Test 1 (T2) and Pre-operations Test (T3) have to be passed before the Edinburgh Tram Network (or Sections thereof) can open for passenger carrying service and are therefore to be scheduled during the test running and driver training and shadow running phases.

The Post Commissioning Tests (T1) can be undertaken in isolation for each Section.

Performance Test 1 (T2) and the Pre-operations Test (T3) can only be undertaken for that/those section(s) that are to be opened for passenger carrying service immediately thereafter.

The Network Performance (T4) and Network Reliability Test (T5) shall not be carried out until Passenger carrying Service has commenced on the whole Edinburgh Tram Network.

The figure on the next page shows the structure of the tests.

Figure 10 - Edinburgh Tram Network: Extract from System Life Cycle Model

Stage	Flow Chart	Tests	Description
8	Passenger Service	Network Performance (T4) and Reliability Test (T5)	The date upon which the Edinburgh Tram Network starts in public service
			PASSENGER SERVICE COMMENCEMENT
7	Shadow Running	Pre-Operations Test (T3)	The period of Tram operations that simulates full public service operation including running to published timetable and calling / dwelling at Tramstops before the ETN enters public service
		Performance Test 1 (T2)	ENERGISATION OF COMPLETED PHASE OF THE ETN
6	Test Running & Driver Familiarisation		The period post-ETN commissioning used to complete driver and control room staff training and gain confidence to enter Shadow Running Phase
		Post-Commissioning Test (T1)	
5	Commissioning	System Integration Test	All subsystems, including the tram, are fully-integrated to form the ETN and are tested to demonstrate that they work together successfully and meet the Employer's Requirements
			ENERGISATION OF SECTION OF THE ETN
4	Set to Work Tests	Site Tests	The point at which subsystems have been installed and then tested to prove they meet their requirements with both Type tests and Site Acceptance tests
			LIMITED ENERGISATION OF PART OF THE ETN
3	Installation / Construction		Once the subsystem has successfully passed Factory Acceptance Tests installation / construction at site will take place and as appropriate a delivery test undertaken.
2	Factory Acceptance Tests	FAT	Thorough demonstrable testing of the subsystem at Infraco's premises
1	Build / Manufacture		Manufacture and assembly of the System by the Infraco
D	Design		The scope of the works designed through Approval in Principle and Approved for Construction & Manufacturing Drawings; with associated verification and validation test and integration plans complete

23.2 Test Planning

The efficient programming of the tests is vital to the success of the system acceptance test process. Infraco shall, therefore, consider and incorporate, in a coordinated manner at each stage of the implementation of this process, the relevant documentation, the required tram availability and commissioning site availability and staff (from all concerned parties), into the overall Infraco test plan.

The Infraco shall prepare and present the Infraco test plan for review no later than six months after the Effective Date. The Infraco test plan shall describe how the Factory Acceptance Testing, Site Testing and Commissioning, Test Running and Driver Training and Shadow Running, as well as the Network Performance and Network Reliability tests are to be undertaken. The definition of these tests is shown in Figure 10. The programming of the tests shall be in accordance with the Programme as described in Section 39 of these Employer's Requirements. Infraco shall ensure that the PSCC and the Independent Competent Person (or the appropriate approval regime in force) are satisfied that the testing process is robust, comprehensive and satisfies all of the safety issues legislated and mandated for the system.

As the project evolves the Infraco Test Plan/Risk Register/Hazard Log shall be maintained by the Infraco. Infraco shall demonstrate that the issues raised in this log have been mitigated or that the tests have demonstrated the risk has been resolved. It is therefore important that the testing procedures and results are correlated with the Project Risk Register and Hazard Log.

23.3 Pre-Systems Acceptance Testing (before starting the systems acceptance process)

The following should be noted with regards to any tests to be undertaken:

- The individual test documentation / specifications shall be submitted to **tie** for acceptance in accordance with Schedule 14 (Review Procedure) and **tie**'s approval obtained before the test can take place;

- A notice period of at least seven working days shall be given to **tie** prior to any test in order that **tie**, and/or its representative(s), can arrange, at their option, to witness the test. The Operator's staff shall also be invited to witness all testing activities;

- Factory Acceptance Tests (FAT) and Site Acceptance Tests (SAT) test results shall be submitted to **tie** for review;

- **tie** reserves the right to be present during any of the tests to be undertaken; and
- Any such review will be undertaken in accordance with Schedule 14 (Review Procedure).

The following tests shall be carried out in advance of the systems acceptance testing sequence.

23.4 Factory Acceptance Tests (FAT)

23.4.1 Overview

Factory Acceptance Tests consist of a series of progressive activities all of which are undertaken at the sub-system manufacturer's premises.

Initial testing at the component manufacturer's premises of components to be used as part of a sub-system shall be undertaken to verify that the components behave as predicted in the design and satisfies the Employer's Requirements for that component.

Initial testing undertaken at the manufacturer's premises shall be undertaken to verify that the sub-system **or** component behaves as predicted in the design and meets the requirements of the design specification and provides correct functionality.

Once sub-systems or components have been successfully tested they shall be incrementally integrated and tested to verify that the sub-systems behave as predicted in the design and meet the requirements of the design specification and provide correct functionality.

Part of the FATs are first article inspections or type tests. These shall be undertaken on the first production item. This inspection shall verify that the Quality and functionality of the product is acceptable and that the manufacturers' quality control processes and procedures have been implemented.

The test specification(s) shall be produced by Infraco and shall be subject to acceptance in accordance with the Review Procedure. **tie** agreement to all proposed component, sub-system and Factory Acceptance Test specifications is required at least ten business days prior to the date of the component, sub-system and FAT tests identified above and any additional tests required by Infraco.

23.4.2 Pass Criteria

FAT testing shall demonstrate that the individual sub-systems or components and equipment fully meet the requirements and are suitable for the subsequent release from the factory environment, delivery to site and installation.

FATs demonstrate the integration of the modules and sub-systems under factory conditions and their reliable operation under cyclical testing.

As far as applicable the FAT will demonstrate that the sub-system or components has been successfully exercised through simulation, including a demonstration on how the alarm handling manages the worst case alarm flood. This test will be subject to **tie** approval.

23.5 Site Tests

23.5.1 Overview

The objective of site tests is to demonstrate that:

(a) Construction/installation activities have been completed correctly by demonstrating that the design specification and functionality of these Employer's Requirements have been achieved;

(b) The sub-systems, in isolation and before passengers are carried, function and behave at site as designed and tested in the FAT;

(c) The infrastructure sub-systems and the tram will then be integrated with each other insofar as is possible to prove that they collectively function and behave at Site as designed and tested in the FAT; and

(d) The ETN functions and behaves at Site as designed and tested in the FAT. This is defined as system commissioning tests and involves the integration of the infrastructure sub-systems and the tram.

The Independent Competent Person as defined under the ROGS Regulations, other regulatory bodies and the PSCC shall need to be satisfied that the ETN is safe to operate before commencement of system commissioning activities. In order to verify this it shall be necessary for the Infraco to address the issues raised by the Independent Competent Person, PSCC, HMRI (or the appropriate approval regime in force) and Approval Bodies. This may necessitate defining specific tests or incorporating additional Network Performance Test details into the suite of verification commissioning tests. Often the areas of interest to these bodies do not become clear until the majority of issues on the risk register and hazard log have been closed out. Typically these may include items such as:

- pedestrian collision, and the risk of a person being "run over " by a tram;
- gauging and possible entrapment of people in pedestrian areas;
- failed tram recovery;
- control room operational procedures; and
- Recovery from derailments, including rerailing a tram.

It is assumed that **tie** shall procure all electrical power and that a supply is available for the complete on site test procedures until commencement of passenger service.

23.6 Sub-system Integration Tests (SIT)

23.6.1 Overview

Sub-system Integration Tests cover items 23.5.1 of these Employer's Requirements. They shall be undertaken on Sections.

The Infraco shall produce the suite of SIT testing specifications for acceptance by **tie** no later than three months prior to the commencement of the tests through the Review Procedure.

23.6.2 Pass Criteria

The tests are passed when:

- Each sub-system, module or component of the system functions in isolation as designed and does not deviate from FAT results.
- All sub-systems for the given section of tramway are demonstrated to collectively perform in accordance with the operations and performance, and all of these Employer's Requirements.

23.7 System Commissioning and Integration Tests (SCT)

23.7.1 Overview

System Commissioning and Integration Tests shall be undertaken on Sections.

Such activities include the running of tram(s) over section(s) of the Edinburgh Tram Network for which Sub-system Integration Tests have been successfully completed. This will verify that the ETN behaves as predicted and as demonstrated as far as was practical in previous tests.

Infraco shall liaise with both **tie** and the Operator to ensure that sufficient competent operational personnel are available to conduct the required activities, including tram drivers and control room staff.

23.7.2 Pass Criteria

The tests are passed when:

- Each sub-system, module or component of the system functions collectively as designed and do not deviate from FAT results.

All sub-systems for the given section of tramway are demonstrated to collectively perform in accordance with the operations and performance, and all of the Employer's Requirements for a representative number of consecutive passes of a tram in each direction over the given section of the network.

- The integration testing shall include demonstrating that the control room systems and control centre equipment connected to a representative sample of the substation SCADA and other

equipment required for Tramstops can be effectively exercised under a robust simulation of trams progressing around the ETN.

23.8 System Acceptance Activities and System Acceptance Tests

The Infraco shall produce the suite of System Commissioning Test specifications for review by **tie** no later than three months before commencement of the tests. These will be reviewed in accordance with the Review Procedure

23.9 Operations and Maintenance Staff Training

The object of this series of activities is to complete driver, control room and maintenance staff training and provide said staff with greater system familiarisation, demonstrating competence to enter Shadow Running phase upon the passing both of the Post Commissioning and Performance Test 1 (T1 and T2). It therefore forms an integral part of the driver-route familiarisation and training programme.

Staff Training shall achieve the following objectives:

- Enables control room staff to gain experience running a tramway without passenger pressures;
- Allow operational staff to fulfil their duties; and
- Enables the drivers to gain route knowledge and familiarity with the trams and procedures without passenger pressures.

The activities undertaken during this phase are designed to demonstrate confidence in the system performance and system safety by means of passing the post commissioning test and performance test T1, and to gain approval of the Independent Competent Person, PSCC and HMRI. (or the appropriate approval regime in force) to progress to Shadow Running.

Infraco shall liaise with the Operator to undertake careful integration of the operational training programme and testing needs in order to avoid conflicts between operational requirements and the technical validation/verification. These comprise items 4, 5 and 6 of the system commissioning model in Figure 10 – Edinburgh Tram Network –Extract From System Lifecycle Model.

23.10 Shadow Running

The Shadow Running phase will last three months and shall:

- Build and validate the operating pattern up to the Service Commencement Date;
- Carry out any further emergency exercises;
- Demonstrate that the ETN can be safely operated in a routine manner and can recover from emergency situations and emerging perturbations;
- Resolve any issues in respect of operating practices;
- Demonstrate that reliability growth is being monitored and corrective action taken as necessary;
- Allow mileage accumulation to be carried out on the trams;
- Permit infrastructure and tram maintenance staff to familiarise themselves with the procedures, practices and operations regimes and to demonstrate competence development;
- Ensure experience is gained in the gathering and evaluation of the performance monitoring regime data in accordance with Schedule 7 of this Agreement; and
- Allow minor adjustments and tuning of systems.

This comprises item 7 of the system commissioning Model in Figure 10 – Edinburgh Tram Network – Extract From System Lifecycle Model.

The evaluation of Shadow Running is the pre-operations test (T3), the passing of which is the gateway to moving into operation, provided all necessary HMRI (or the appropriate approval regime in force) consents are obtained.

23.11 Final System Acceptance Tests in the Operations and Maintenance Phase

Within twelve months of opening the ETN to passenger service Infraco shall undertake and pass the Network Performance (T4) and Network Reliability Test (T5) (as described in Sections 23.16 and 23.17).

23.12 Emergency Exercises

The Infraco and the Operator shall prepare a plan for review by tie and the Competent Person and following approval of the plan, the Operator shall perform with support from the Infraco a series of exercises with the emergency services and other stakeholders such as Network Rail and BAA. The planning for these exercises will require close liaison by the Infraco and the Operator with the various emergency services. They will be planned to take place in the commissioning period, test running or in the shadow running phase. The nature of the exercises will require detailed planning with Fire, Police, and Ambulance services but are likely to include, as a minimum:

- A simulated road traffic accident at a major road junction;
- A major tram collision/derailment including emergency isolations; and
- A rescue of persons trapped underneath a tram.

23.13 Post Commissioning Test Specification – T1

This sub-section sets out the Performance Test assumptions applicable to all Performance Tests. Should the Infraco be able to prove to the reasonable satisfaction of **tie**'s Representative that any of the Performance Test pass criteria have been exceeded by reason of a Performance exclusion then the test results will be amended to discount the effects of such Performance Test exclusions.

The following exclusions shall apply:

- Operator staff in the Control Room causing or significantly contributing to delays in the operation of the System;
- Failure to provide the correct number of trained Tram Drivers as defined in the DPOFA save where the failure is as a result of the Infraco's own failure in respect of its own obligations in the Agreement;
- Failure of the Tram Drivers to consistently drive the Trams to good industry practice;
- Failure to procure all electrical power that is required for the operation of the System. Periods when the electrical supply is not available will be discounted from the Test and the test period shall be extended by an equivalent period;

- A failure by the Operator to comply with the relevant parts of the Operations and Maintenance Manuals; and
- Damage caused by the Operator.

However, in no event shall any allowances or relief or Network Performance Test exclusion be granted to the Infraco where any delays or failure to pass the Network Performance Test has been caused or contributed by:

(a) Any default, breach or omission by the Infraco or its subcontractors;

(b) Infraco Defects or Snagging;

(c) Equipment undergoing modification or rectification by the Infraco and;

(d) TRAMCO's failure pursuant to the Tram Maintenance Contract.

The burden of proof shall be on the Infraco to show that such failures of the Operator were caused by reasons for which the Infraco was not responsible and for which the Operator should be properly accountable for by reason of the Operator's default, omission, negligence or breach of statutory duty. The Infraco shall develop and agree audit procedures with **tie**, and the Operator in respect of the Network Performance Test exclusions set out in this paragraph.

Dwell times at Tramstops shall be regulated; as set out in the Employer's Requirements.

23.13.1 Overview of Post Commissioning Test

This section describes the requirements for the Post Commissioning Tests, their execution, monitoring and completion. Post Commissioning Tests form part of the requirements for the final system acceptance.

23.13.2 Test Objectives

This Post Commissioning Test seeks to achieve the following objectives:

Prove that the system is capable of controlling an 'off-street' section of Edinburgh Tram Network in an acceptably safe manner; and

Prove that the system is capable of controlling an 'on-street' section of Edinburgh Tram Network in an acceptably safe manner.

23.13.3 Network Performance Test Description

The Post Commissioning Test is a multi part test, with each part of the test required to be passed in sequence before the entirety of the Post Commissioning Test can be passed. It cannot be conducted until Phase 1a of the Edinburgh Tram Network has been successfully commissioned.

23.13.4 Features

The Infraco shall demonstrate that Gogar Depot and Phase 1a of the Edinburgh Tram Network can be monitored and controlled in accordance with the Case for Safety.

Tests shall provide for:

- Demonstration of the run times as defined below.
- Forty end-to-end tram movements on the nominated section of which twenty are in each direction; and
- Trams will dwell at each Tramstop, and will exercise opening and closing of the doors at each Tramstop, the minimum period of doors being fully opened at each Tramstop will be 13 seconds.

The undertaking of the test shall essentially be an operational function led by Infraco but in conjunction with the Operator. Infraco shall manage the preparation for the tests with technical and maintenance support and monitoring by Infraco (along with representatives from **tie)**.

For the demonstration of run time, the following conditions shall apply:

- Targets of the run time demonstrations shall be developed in accordance with Section 2.12 of the Employers Requirements and agreed between the parties from the agreed maximum journey times and associated assumptions detailed in Section 2.11 of the Employers Requirements during the design phase, as further details of tram performance and traffic lights are available;
- For avoiding of influences due to public traffic, run time demonstrations shall take place during night times only;
- tie will be responsible for the communication with local authorities like CEC, UTC or police;
- run time demonstration to be performed in both directions and shall include the following two demonstrations:
  - run allowing tram priority at each traffic junction along the route
  - run following the regulations and phasing of traffic lights under regular conditions
- Sufficient runs shall be carried out in both directions to provide a level of confidence that the target runtimes have been achieved as agreed in accordance with Section 2.12 of the Employers Requirements.
- Infraco shall undertake and pass the Post Commissioning Test (T1) before proceeding to the Performance Test 1 (T2).

tie shall be given thirty working days advance notice of the finalisation of the Post Commissioning Test plan and seven working days written notice of the Test commencement date.

23.13.5 Pass Criteria

Subject to the exclusions defined in23.13 above, the following shall define the pass criteria for the T1 test.

- All test results from previous tram and system and sub-system tests are to be available and signed off as accepted by **tie**, including all the closed out Snagging Rectification Certificates.
- The test shall have been successfully completed when:
  - At least 95% of the end-to-end tram movements are within the agreed target runtime; and
  - Acceptance of the Case for Safety and test results by the Independent Competent Person and where appropriate Her Majesty's Railway Inspectorate (or the appropriate approval regime in force) and approval or "No Objection to Proceed" respectively for full driver training has been obtained.

23.13.6 Monitoring and Reporting of Test Performance

Appropriate levels of observation by Infraco shall be conducted to satisfy **tie** that the auto-generation of reports from the systems is accurate.

23.14 Performance Test 1 Specification – T2

23.14.1 Overview

This section describes the requirements of Performance Test 1 and the proposals for its execution monitoring and completion. Performance Test 1 forms part of the requirements for the final System Acceptance.

23.14.2 Test Objectives

Performance Test 1 seeks to achieve the following objectives:

- Demonstrate that the Edinburgh Tram Network (or sections thereof) can be operated in an acceptably safe manner;

- Demonstrate that the completed Operator training programme has achieved an adequate competency to proceed in Shadow Running; and

- Demonstrate the mobilisation and competency of the maintenance teams provided by the Infraco.

23.14.3 Network Performance Test Description

Performance Test 1 builds upon Post Commissioning Test and cannot be undertaken until Post Commissioning Test has been passed.

23.14.4 Features

The Infraco shall demonstrate that the Edinburgh Tram Network can start Shadow Running and can be monitored and controlled in accordance with the Case for Safety.

Performance Test 1 shall provide for:

- Operation from 07:00 to 20:00 hrs on three consecutive days (none of which are Saturday, Sunday or Bank Holidays);
- The System will run to the Operational Timetable with headways extended by no more than 50%. For the avoidance of doubt, the trips scheduled for this test are the same as in the Operational Timetable as set out in Sections 2.11 and 2.12 of these Employer's Requirements; and
- Trams shall dwell at each Tramstop and shall exercise opening and closing of the doors at each Tramstop. The minimum period of doors being fully opened shall be 13 seconds at each Tramstop.
- The undertaking of the test shall be an operational function led by Infraco but in conjunction with the Operator. Infraco shall manage the preparation for the Tests with technical and maintenance support and monitoring by Infraco (along with representatives from **tie**).
- Infraco shall undertake and pass Test T2 before proceeding to the Shadow Running phase.
- **tie** shall be given twenty working days advance notice of the Performance Test 1 plan and seven working days written notice of the Test commencement date.

23.14.5 Pass Criteria

The following define the pass criteria for the T2 test.

All test results from previous tram and system and sub-system tests are to be available and signed off as accepted by **tie**. Any Defect Correction lists shall be available and agreed as being programmed to be remedied.

The test shall have been successfully completed when:

- At least 95% of the end-to-end tram movements meet the requirements of the Performance Regime in terms of Punctuality Service Element as defined in 2.16.

- Acceptance of the Case for Safety and test results by the PSCC , the Independent Competent Person and where appropriate Her Majesty's Railway Inspectorate (or relevant approval body) and their approval or 'Letter of No Objection to proceed" into Shadow Running.

23.14.6 Monitoring and Reporting of Test Performance

The primary data used to evaluate the test shall be automatically generated from the Supervisory Control & Communications performance monitoring sub system and validated independently.

23.15 Pre-Operations Test Specification – T3

23.15.1 Overview

This section describes the requirements of the Pre-Operations Test and the proposals for its execution monitoring and completion. The Pre-operations Test shall be conducted during the Shadow Running phase of the project and forms part of the requirements for the final System Acceptance.

23.15.2 Test Objectives

The Pre-operations Test seeks to prove that the Edinburgh Tram Network, or section thereof, in the event of sectional opening operates to a sustained level of performance determined by the Opening Timetable and the performance regime such that:

- The Operator can safely commence passenger carrying revenue earning service;
- The Infrastructure and Tram Maintainers can commence the Planned Maintenance proposed for passenger carrying revenue earning service; and
- The Edinburgh Tram Network passes the ride quality criteria in Tables 62 & 63 of the Employers Requirements.

23.15.3 Network Performance Test Description

Pre-operations Test is a four-part test upon successful completion of all parts of which the Edinburgh Tram Network or section(s) thereof can be opened to public service. The Pre-Operations test cannot be undertaken ahead of the successful completion and passing of the respective Performance Test 1.

23.15.4 Features

The Infraco shall demonstrate that the entire Edinburgh Tram Network or section(s) thereof can be operated to the defined levels of performance, reliability and availability and in accordance with the operational Case for Safety.

The Part 1 test shall comprise:

- Five consecutive days (none of which are Saturday, Sunday or Bank Holidays) of testing in accordance with the Operational Timetable. This test is to be undertaken no sooner than two weeks after commencement of the Shadow Running phase;

The Part 2 test shall comprise:

- Five consecutive days (none of which are Saturday, Sunday or Bank Holidays) of testing in accordance with the Enhanced Timetable, which cannot commence until two weeks from successful completion of the Part 1 test, and must be completed at least two weeks prior to the end of the Shadow Running phase, unless agreed otherwise by **tie**.

For both the Part 1 and Part 2 tests, trams shall dwell at each non-terminus Tramstop for a nominal 25 seconds and the doors shall normally remain closed.

The Part 3 test (which can be undertaken at any time during shadow running) shall comprise:

- One of the fleet of trams shall be selected by **tie** to be instrumented and monitored. The selected tram shall provide results for 100 journeys of the selected tram consecutively over all sections of the ETN;

- Measurement of lateral, longitudinal and vertical accelerations to be taken on the floor of the trailing cab of the tram.

- All tram journeys during the test period that provide data for this test shall be completed within a tolerance of plus or minus 10% of the journey times that are setout in the Operational Timetable;

- Analysis to be performed as follows:

  - For each journey between Tramstops a root mean square average of the combined lateral, longitudinal and vertical accelerations (RSS addition) is to be determined in accordance with ISO 2631.

The Part 4 test shall comprise:

- One tram from the fleet will be loaded to AW0
- Measurement of lateral, longitudinal and vertical accelerations to be taken on the floor of the trailing cab of the tram
- Entire Edinburgh Tram Network to be covered within 10% of the journey times that are setout in the Operational Timetable
- Load the tram to AW2 and repeat steps above; and
- Analysis to be performed as follows:
  - Select the greater of the results (AW0 or AW2) for each of the journeys to be used as a benchmark for each individual tram for any particular journey.

The undertaking of the test shall essentially be an operational function led by Infraco but in conjunction with the Operator. Infraco shall manage the preparation for the Tests with technical and maintenance support and monitoring by Infraco (along with representatives from **tie**).

Infraco shall undertake and pass Pre-operations Test before proceeding to the Service Commencement Date.

tie must be given thirty working days advance notice of the Performance Test 1 plan and seven working days written notice of the Test commencement date.

23.15.5 Pass Criteria

The following define the pass criteria for the T3 test.

All test results from previous tram and system and sub-system tests shall be available and signed off as accepted by **tie** including the clearance of all Defect Correction lists unless dispensation has been proposed by Infraco and agreed by tie acting reasonably.

23.15.6 Part 1 and 2 Pass Criteria

Each Pre-operations Test can only be successfully completed:

- As soon as 99% Punctuality Service Element as defined in chapter 2.16 has been achieved in accordance with the Infraco and Tram Maintainer performance regimes.

For the avoidance of doubt any delays caused by road traffic shall not be included in the delay measurement.

23.15.7 Part 3 and 4 Pass Criteria

Part 3 test can be deemed to be passed when none of the 100 journeys have an rms of the combined lateral, longitudinal and vertical accelerations exceeding 30mg.

Part 4 test can be deemed to have been passed when the instrumented tram from the fleet has attained a Ride Index equal to or less than as shown in the tables below in accordance with ISO 2631:

Speed	Wz Vertical	Wz Lateral
40 km/h	2,32	1,58
70 km/h	2,96	2,36

Table 44 - Ride Index in the Drivers Cab

Speed	Wz Vertical	Wz Lateral
40 km/h	2,24	1,64
70 km/h	2,82	2,28

Table 45 - Ride Index in the Passenger Compartment

23.15.8 Consents

This is in addition to passing the above tests.

All consents to achieve full passenger service must have been obtained and evidenced as part of Test T3.

23.15.9 Monitoring and Reporting of Test Performance

The primary data used to evaluate Parts 1 and 2 of this test shall be automatically generated from the Supervisory Control & Communications performance monitoring sub system and validated independently.

During the Pre-operations Test monitoring period Infraco will undertake audits, to the satisfaction of **tie**, of the collection and communication of fault and tram punctuality data against each of the performance indicators.

23.16 Network Performance Test Specification – T4

23.16.1 Overview

This section describes the requirements of Network Performance Test (T4) and the proposals for its execution monitoring and completion. Network Performance Test forms part of the requirements for the final System Acceptance.

The Test shall cover a 28 day consecutive period, which shall be undertaken after the Edinburgh Tram Network has entered Public Service until the Test is satisfactorily passed or, unless otherwise agreed by **tie**.

The Test is the operation of the complete ETN to the Operational Timetable each day for the duration of the test. The timetable used for the test shall be agreed with **tie**.

The undertaking of the test will be an operational function carried out by the Operator. Infraco shall manage the preparation for the Tests with technical and maintenance support and monitoring by Infraco (along with representatives from **tie**).

Infraco shall undertake and pass the Network Performance Test within twelve months after the Service Commencement Date of the whole Edinburgh Tram Network.

tie shall be given thirty working days advance notice of the Network Performance Test plan and seven working days written notice of the Pre-operations Test commencement date.

23.16.2 Pass Criteria

The test will measure the Punctuality Service Element over twenty-eight days.

The test shall be passed once the criteria stated in the Employer's Requirements Operational and Performance Section (Section 2) have been demonstrated to be met.

The Infraco may discount any one day from the calculation but shall not be a day on which a Special Demonstration shall be planned.

For the avoidance of doubt the exclusions in Section 23.13 shall apply.

23.16.3 Special Demonstrations

During the Network Performance Test a number of demonstrations will be performed, these are described in the following two sub-sections.

23.16.4 Substation and UPS Demonstrations

Infraco shall demonstrate that the system can operate with two of the traction supplies from a substation taken out of use, one at a time, for a period of two hours during the peak service. The substations concerned and the times for their disconnection will be selected by **tie**.

The disconnection of the substations and placing them into bypass will be undertaken in accordance with the Operator's normal procedures for such switching.

Operation of the Uninterruptible Power Supplies (UPS) at two tram stops for four hours shall also be demonstrated. During this period the electrical supply to the chosen tram stop UPS's shall be disconnected. The tram stop UPS's concerned and the time for their disconnection shall be chosen by **tie**.

The Infraco shall prepare a plan detailing the programme for the above events and include this in the test arrangements that will be submitted to **tie** in accordance with the review procedure.

23.16.5 Tram Change Over

The Infraco shall demonstrate, during peak hours, a Tram changeover by which a Tram in service shall be substituted with the "hot spare".

tie will give Infraco thirty minutes notice of this test.

23.16.6 Monitoring and Reporting of Test Performance

The Punctuality Service Element shall be obtained. The results for the previous day shall be ratified in accordance with the Performance Regime in Schedule 7 of this Agreement and the Operator Performance Regime under the DPOFA Agreement.

A meeting will take place daily where the performance up to that date is reviewed and any investigations concluded and data accepted. The meeting will be recorded and minutes distributed to each party by the meeting secretary within three working days.

During the Network Performance Test monitoring period **tie** may undertake audits of the collection and communication of fault data against each of the performance indicators.

23.16.7 Network Performance Test Timetable

The Enhanced Timetable delivering the ultimate capacity of the ETN as contracted shall be prepared by the Operator as that which shall be the ultimate timetable to be used in Passenger Service, proposed by the Infraco, and agreed by **tie**.

23.17 Network Reliability Test Specification – T5

23.17.1 Overview

This sub-section describes the requirements of Network Reliability Test and the proposals for execution, monitoring and achievement of System Acceptance.

Network Reliability Test is a set of sub-system reliability tests each measured over a twenty-eight day period. Each specified sub-system has its own specified target detailed within 23.17.2. The tests may start on the same date as T4 (on or after Service Commencement Date) and as each subsystem is individually demonstrated to meet its contractual target that subsystem reliability test is then considered completed. Network Reliability Test is only passed when all the sub-systems meet their targets.

The undertaking of the test will essentially be a maintenance function carried out by the Infraco. However, it requires Infraco management of the preparation for the Tests with technical support and monitoring by Infraco, (along with representatives from **tie** during the Test).

Infraco shall undertake and pass Network Reliability Test within twelve months after the Service Commencement Date of the whole Edinburgh Tram Network to pass Network Reliability Test.

If any part of the works or part of the ETN fails to pass Network Reliability Test then rectification, repair, modification or reinstatement of that part shall be undertaken. The defect correction period on that part of the system or any sub-system which fails the test shall be extended a further twelve months beyond the time of rectification, repair or modification. Infraco will propose and undertake the necessary remedial action and retest to achieve acceptance.

tie must be given 20 working days advance notice of the Network Reliability Test plan and fourteen working days written notice of the test commencement date.

23.17.2 Sub-Systems Subject to Network Reliability Test and Reliability targets

Table 46 - Network Reliability Test

TEST	TARGET VALUE
Tram Reliability	Please refer to Tram Supply Agreement.
Passenger Information Display System	As set out in the Employer's Requirements 99.75% availability over six consecutive Periods.
Passenger Help/Emergency Help Point System	As set out in the Employer's Requirements 99.75% availability over six consecutive Periods.
On Street Track & Formation	Achieves 99.995% availability over six consecutive Periods.
Off Street Track & Formation	Achieves 99.995% availability over six consecutive Periods.
Point Machines	Achieves 99.995% availability over two consecutive Periods.
Traction Switchgear	Achieves 99.99% availability over two consecutive Periods.
OLE Equipment	Achieves 99.999% availability over two consecutive Periods.
Earthing & Bonding	No reported stray current instances, or rail to earth voltages that exceed 60 volts as defined in the EN50122/1, for four consecutive Periods
Operational Radio	Achieves 99.75% availability over two consecutive Periods.
Operational Data Network	Achieves 99.99% availability over two consecutive Periods.
UTC Interface	Achieves 99.75% availability over four consecutive Periods.
Wheel/Rail Interface	No proven instances of Noise and Vibration exceedence have occurred in a six month periods
CCTV System	Achieves 99.9% availability over two consecutive Periods.
Tram Position Detection System	Achieves 99.9% availability over two consecutive Periods.
Traction SCADA System	Achieves 99.75% availability over two consecutive Periods.
Tramstop Lighting	Achieves 98.5% availability over two consecutive Periods.

23.17.3 NOT USED

23.17.4 Assumptions and Exclusions

General Exclusions and Assumptions

Should the Infraco be able to prove to the satisfaction of **tie** that any of the reliability tests would have been exceeded by means of one or more of the following exclusions then, in consultation with **tie**, the test results shall be amended to discount the effects of such proven Network Reliability Test exclusions.

The Network Reliability Test exclusions and Network Reliability Test assumptions set out in this section relate only to the Network Reliability Test and shall not be used or relied upon in any circumstances in any connection with any other test.

When the tests have commenced, neither **tie,** the Operator or Third Parties shall be entitled to interfere, interrupt or influence the tram operation or service or the tests in such a way that it disadvantages Infraco, or has an impact on the testing process, the results, or causes the non acceptance of the tests.

Operator Influences

Defects caused by the Operator's failure to:

Provide properly trained staff as defined in the DPOFA, exercising a reasonable duty of care to good industry practice.

Exclusions

The Infraco must demonstrate by reasoned argument that failures or loss of availability resulting from Operator actions were caused by reasons for which the Infraco was not responsible (eg Operating Manuals and supplier training). The Infraco shall develop and agree audit procedures with **tie** and the Operator in respect of the Network Reliability Test exclusions set out in this paragraph.

However, in no event shall any allowances or relief or Reliability Network Reliability Test exclusion be granted to the Infraco where any delays or failure to pass Network Reliability Test has been caused or contributed to by:

- Any default, breach or omission of the Infraco;
- Infraco defects; and
- Equipment undergoing repair, modification or rectification by the Infraco.

Realistic long term response times to repair defects shall be provided by Infraco during the period of the test.

It is assumed that **tie** shall procure all electrical power and that a supply is available for the tests.

Any failures resulting from inappropriate actions or omissions by the Operator or his contracted staff shall be discounted. as set out in the DPOFA .

For the avoidance of doubt, the impact of third party vandalism shall be excluded.

23.17.5 Monitoring & Reporting of Test Performance

The scoring of faults should be achieved by first reviewing the fault logs and performance reports using them as a filter to establish which faults need to go forward into the review. The review meeting will then be used to discuss and allocate the responsibility of faults under the performance regime.

The review meeting will take place daily where the performance of each system will be reviewed for the previous day. Representatives of Infraco, Tramco, **tie** and the Operator will attend this meeting. Each sub-system will be reviewed and agreement reached on all failures. The meeting will be recorded and the resulting daily report distributed to each party within 3 Business Days.

23.17.6 Audit Procedures

During the Network Reliability Test monitoring period, **tie** may undertake audits of the collection and communication of fault data against each of the sub-system tests and also audit the response times to rectification of notified faults.

23.17.7 Services in Connection with the Operator

The Operator shall be appointed separately by **tie** to provide various services in conjunction with the construction, commissioning and operation of the Edinburgh Tram Network. The Operator's Scope of Supply shall include the following:

Provision of representatives during the Construction, Commissioning and Operation stages to provide the Operator's Services, including liaison with the Infraco.

Observing and reporting on the acceptability of the proposed design and the quality of infrastructure, trams and equipment;

Supporting obtaining the necessary consents for commissioning and Public Operation;

Assisting Infraco in development of a Testing & Commissioning Plan (in conjunction with Infraco)

Appointment and training of staff in support of any commissioning process.

Notwithstanding the Operator's responsibilities described above, the Infraco responsibilities (associated with the interface with the Operator) shall include, but not be limited to, the following:

- providing support to obtain operational approvals and consents in respect of the Edinburgh Tram Network;
- providing technical support on systems integration
- providing technical support on the development of operational plans and management systems; and
- provide technical support with regard to operational interfaces with CEC traffic management systems. This shall include phasing sequence drawings of key junctions
- Preparing and submitting plans for driver training and the training of other operational staff. Undertaking training of the Operator's trainers (8-10 trainers) and control room staff (18-21 staff)
- Prepare and submit plans for maintenance and operations manuals
- Provide support required for System Acceptance, including the development of a Testing and Commissioning Plan;
- Work to mitigate any delays to the system construction and commissioning howsoever caused.

Comm. Model Ref	Infraco	Operator
	The following table represents a guide of the key responsibilities associated with the Infraco and the Operator during the various phases of the Life Cycle Model. Further details are provided within these Employer's Requirements and the DPOFA. The Infraco Contract (refer to the Code of Construction Practice) allows for the potential for Sectional Completion. Accordingly, where Sectional Completion was to apply, then it would follow that the (System Commissioning Model) stages for each Sectional Completion would apply at different times in the programme (e.g. possible to have "Shadow Running" ongoing for Section A, whilst "Commissioning" for Section B on-going). The listed responsibilities would equally apply to each Sectional stage. Items are listed under the most appropriate stage, but this does not exclude the associated activity from being required during other stages	
	GENERAL OBLIGATIONS	
	The general provision of all the technical and management services as defined within these Employer's Requirements. This shall include design, programming, installation, testing, system acceptance, training and maintenance. The Infraco shall be required to work closely with the Operator to successfully deliver the project.	Liaising and working closely (and timely) in partnership with the Infraco to meet the requirements of the Project associated with design, installation, system acceptance, delivery into service and maintenance, taking account of the Infraco's Scope of Supply. The Operator shall also be responsible for Operator Maintenance.

	Management and implementation of a liaison process, with the assistance of the Operator, to ensure that all parties are fully informed and resources arranged adequately.	Provision of staff resources during the Commissioning, Construction and Operation stages to provide the Operator's Services, including liaison with the Infraco. Provide and keep updated the training and recruitment plan describing the roles of each member of the Operations staff with specific instructions for the proper performance of their duties and training requirements.
		Ensuring that all relevant operational and maintenance subcontracts are in place and that appropriate subcontractor staff training programmes are implemented.
	Responsibility for adherence to the programme	Monitoring Progress
	Responsibility for complying with the functional and non-functional requirements as defined within these Employers Requirements.	Observing and commenting on the acceptability of the design and installation.
	Production of risk deliverables and register in accordance with these Employer's Requirements.	Provision of risk advice (from the Operator's viewpoint) to Infraco and commenting / liaising on risk documentation produced by Infraco.
	Under the CDM Regulations, the Infraco shall be responsible as Principal Contractor and shall comply with all associated CDM Responsibilities relating to the design and construction activities until Services Commencement Date (and beyond, where appropriate). Beyond the Services Commencement Date, the Infraco may be required to undertake certain elements of work (including maintenance) which fall within the remit of CDM Regulations. In such a scenario the Infraco would be responsible as Principal Contractor for the duration of such works.	As with any party working on a "CDM site", the Operator shall be responsible for complying with CDM Regulations and the Principal Contractors Safe Systems of working (e.g. permit to work system). Notwithstanding the Infraco's over-arching responsibility as Principal Contractor up to Services Commencement Date, once the network is energised (and trams begin to operate) the Operator shall have a key role in managing the "operational end" of systems (e.g. the Operator would be responsible for developing and managing a permit to isolate systems within the context of the over-arching Infraco's systems).

	There shall be a requirement for the Infraco to comply where appropriate with the Operators Systems and procedures associated with the Operator's responsibility to manage operational safety.	The Operator shall be responsible for Operational Safety. This shall include developing Operational Plans, timetables and Management Systems and Operating Procedures for the Operational Phase. Operational safety responsibilities shall, by definition, occur once any part of the system is energised (anticipated to be between Stages 4 and 5, "Set to Work Tests" and "Commissioning", respectively.
DD	**DETAILED DESIGN STAGE**	
	Completing the full design and meeting all the deliverables as defined within the SDS Providers Agreement with **tie**, which is being novated and which is included in Volume 7 of the Infraco ITN.	Observing and reporting on the acceptability of proposed designs against the Design Manual and the Employers Requirements and the ability of the proposals to meet operational objectives
	Obtaining all approvals and consents in respect of the Edinburgh Tram Network;	Supporting the obtaining of necessary consents for Commissioning and Public Operation (and any consents which are relevant to the Operator).
	Managing and undertaking all interfaces with CEC traffic management systems.	Assisting Infraco with the interfaces with CEC, which are relevant to the Operator.
	Developing and updating a Testing and Commissioning Plan (TCP) for each element of the System including programmes and procedures with controls and acceptance criteria.	Providing input to a Testing and Commissioning Plan (TCP) for each element of the System including programmes and procedures with controls and acceptance criteria.

	Assisting the Operator with the development of a process for the handover for Operational purposes of the infrastructure and equipment from Infraco.	Developing a process for the handover for Operational purposes of the infrastructure and equipment from Infraco.
	Scheduling, and coordinating with the Operator, driver training, and the training of other operational and maintenance staff. The scope of the training shall cover all aspects of maintenance (as defined within these Employer's Requirements) and all operations. The Infraco shall be responsible for developing coordinated Training Plans in accordance with section 40 (Maintenance) of these Employer's Requirements.	Assisting the Infraco in the development of coordinated Training Plans and the specification of training documentation requirements from Infraco and Sub-suppliers.
	Complying with, and undertaking internal audits, associated with the Code of Construction Practice	Reviewing Infraco's compliance with the Code of Construction Practice, associated with any operator related issues.
1	BUILD / MANUFACTURE	
	Managing and implementing the manufacture and assembly of the System in accordance with the general provision of all the technical and management services as defined within these Employer's Requirements	Observing and reporting on the quality and functionality of Infrastructure and Equipment provision / manufacture and its compliance with Specifications where it affects the operational objectives.
	Liaising with the Operator to address any associated issues, and where necessary rectifying any works.	
2	FACTORY ACCEPTANCE TESTS	
	Managing and implementing the Testing process in accordance with the TCP. FAT tests (initial tests and integrated testing) shall be undertaken to verify that the components / system behave as planned in the design, meet the requirements of the design specification and provides correct functionality.	Assisting and providing advice to Infraco to manage the Testing process in accordance with the TCP.
		Observation if necessary and appropriate of any factory acceptance tests on equipment to be provided.

3	INSTALLATION / CONSTRUCTION	
	Managing and implementing the installation and construction at the Site in accordance with the general provision of all the technical and management services as defined within these Employer's Requirements.	Observing and reporting on the quality and functionality of Infrastructure and Equipment provision and installation, and its compliance with Specifications where it affects the operational objectives
	Liaising with the Operator to address any associated issues, and where necessary rectifying any works.	
4	SET TO WORK TESTS	
	Managing and implementing the Testing process in accordance with the TCP. These site tests (System Integration Tests) in accordance with section 6 of Part 1c – Tram Testing and Commissioning of the Employer's Requirements shall be undertaken to demonstrate that the construction / installation has been undertaken satisfactorily and that the systems behave as intended in the design.	Assisting and providing advice to Infraco to manage the Testing process in accordance with the TCP
		In accordance with the TCP; witnessing and reporting on the implementation tests
		Attending Tests
		Managing the Operational Safety of the Testing and Commissioning process in support of Infraco once the system is energised and trams begin to operate. Develop a system of management of safety during testing and commissioning (including the training of staff and contingency provisions)
	Obtaining Consents and Approvals required to allow the system to be energised and trams to operate to the extent not the responsibility of **tie** under Clause 19.	Supporting the obtaining of Consents and Approvals for the system to be energised and trams to operate.
	Reviewing and commenting on the proposed Commissioning Phase Operating Procedures.	Developing Commissioning Phase Operating Procedures.

5	COMMISSIONING	
	Managing and implementing the Testing and Commissioning process in accordance with the TCP. This includes the site commissioning testing as defined within this Section at 23.20.1.	Assisting and providing advice to Infraco to manage the Testing and Commissioning process in accordance with the TCP
		In accordance with the TCP; witnessing and reporting on the implementation tests
		Attending Tests
		Managing the Operational Safety of the Testing and Commissioning process in support of Infraco once the system is energised. Develop a system of management of safety during testing and commissioning (including the training of staff and contingency provisions)
	Providing technical support on the development of operational plans, timetables and management systems and Operating Procedures; and	Developing Operational Plans, timetables and Management Systems and Operating Procedures for Operational Phase
	preparing and submitting plans, manuals & procedures for maintenance and operations in accordance with these Employer's Requirements, in time for System Energisation.	Reviewing and commenting on the acceptability of plans, manuals & procedures for maintenance and operations.
6	TEST RUNNING AND DRIVER FAMILIARISATION	
	Scheduling, and coordinating with the Operator, driver training and the training of other operational staff as part of the Commissioning activities prior to the start of Shadow Running. Implementing training plans including the undertaking of training of the Operator's trainers (8-10 trainers) and control room staff (18-21 staff).	Appointing and training of Operator staff and Operational rules and procedures training for Infraco. The Operator shall be responsible for training the drivers (utilising the training plans / information developed by Infraco and the Operator Trainers, who shall have been assessed as competent by Infraco on the operation of their systems and equipment).
	Demonstrating that the completed Operator training programme has produced a level of adequate	Assisting Infraco to demonstrate that the completed Operator training programme has

	competency to proceed to shadow running.	produced a level of adequate competency to proceed to shadow running.
T1	The implementation of the T1 Post Commissioning Test: follows successful commissioning of the nominated section, test to demonstrate and prove the system is able to perform in a safe manner and delivers the required end to end run times (these may be up to 5% greater than target runtimes).	Assisting and providing advice to Infraco to manage the Testing and Commissioning process in accordance with the TCP
T2	The implementation of the T2 Performance Test: precedes Shadow Running: test to demonstrate and prove the system is able to perform satisfactorily to move into the 3 month Shadow Running Period (The T2 Performance Test is performed over 3 days and 95% of runtimes must be within target runtime; whilst service headways may be increased by up to 50% of those of the operating timetable).	
		In accordance with the TCP; witnessing and reporting on the tests
		Attending Tests
		Managing the Operational Safety of the Testing and Commissioning process. Develop a system of management of safety during testing and commissioning (including the training of staff and contingency provisions)
	Infraco to review to prepare Go Live timetable to be tested during shadow running.	Operator to prepare the Opertional Timetable to be tested during shadow running.
	Obtaining Consents and Approvals required to allow the system to start shadow running to the extent not the responsibility of **tie** under Clause 19.	Supporting the obtaining of Consents and Approvals for the system to commence shadow running.

7	**SHADOW RUNNING**	
	Implementing the Shadow Running Phase to cover the requirements. Please refer to relevant section below.	
T3	Implementing the T3 Pre-Operations Test: precedes Service Commencement, the test is undertaken during the Shadow Running Period, the test is the operation of the initial entry into service timetable and includes infrastructure, trams and operations systems (T3 is over 2 x 5 days and 99% performance must be achieved).	In accordance with the TCP; witnessing and reporting on the tests
		Attending Tests
		Managing the Operational Safety of the Testing and Commissioning process
		Developing a system of management of safety during shadow running and public operation (including the training of staff and contingency provisions)
	Obtaining the necessary Consents and Approvals for Public Operation to the extent not the responsibility of **tie** under Clause 19.	Supporting the obtaining necessary consents for Public Operation
8	**SERVICE COMMENCEMENT DATE**	
	Infraco shall support the preparation for the T4 Network Performance Test with technical and maintenance support and monitoring. (T4 is over a 28 consecutive day period on a rolling basis in passenger service with the ultimate timetable in operation. 1 day in the period may be discounted. The test is to show that reliable operation is achieved.)	The Operator shall manage the preparation for the T4 Network Performance Test with technical and maintenance support and monitoring by the Infraco. The implementation of the T4 Network Performance Test.

	Demonstrations during the Network Performance Test e.g. sub-stations / UPS – demonstration of operation where a sub-station can be taken out of service for 2 hours during peak service.	
	Review, comment and provide support in preparation of the Test and Ultimate Timetables.	Preparation of an agreed Network Performance Test Operational Timetable and Enhanced Timetable as that which shall be the ultimate timetable to be used in Passenger Service.
	Infraco management for the preparation of the T5 Network Reliability Test with technical support and monitoring by Infraco.	The implementation of the T5 Network Reliability Test: the reliability testing of certain sub-systems in Passenger Service (within 12 months of opening).
	In accordance with the TCP; witness and report on the tests	Managing the Operational Safety of the Testing and Commissioning process. Develop a system of management of safety during testing and commissioning (including the training of staff and contingency provisions)

Table 47 - Table showing a guide of the key responsibilities associated with the Infraco and the Operator during the various phases of the Life Cycle Model

23.18 Tram Testing and Commissioning

23.18.1 Document Scope

The scope of this section of the document is to define the Tram Testing & Commissioning requirements that are applicable to all elements of the Edinburgh Tram Network (ETN).

23.18.2 General Requirements

This document defines the process for the testing and commissioning of the ETN that shall be carried out by the Tram Supplier together with the requirements of the Tram Tests that must be carried out to meet the Employer's Requirements and all relevant regulatory bodies as to the quality, performance and compliance of the Trams. It also identifies the tests to be carried out to meet the requirements for System Acceptance testing (involving Trams) of the completed Edinburgh Tram Network.

For certain of the type tests it may be acceptable to reference relevant tests previously undertaken on similar systems. The Tram Supplier will justify to the Tram Inspector all instances where this approach is applicable. This approach will only be possible in areas where there has not been anything other than very minor design changes. Where this approach is proposed, the final test reports and supporting data must be provided to allow the information to be assessed and accepted or rejected. It will be the Tram Supplier's responsibility to obtain any necessary permissions for the use of the test results and data concerned.

23.18.3 Test Plan

The Tram Supplier shall create and adhere to a Test Plan, which will comply with the requirements of EN50215 and encompass a logical build up of testing that leads to acceptance of the vehicles. The Test Plan shall include sufficient testing to demonstrate that all the Employer's Requirements have been met and to ensure that all relevant consents for passenger operation can be achieved from all relevant bodies. It must also be created in such a way as to maximise off-site testing.

The Tram Supplier shall carry out the Tram tests in accordance with this document, the Test Plan and the Tram commissioning and delivery programme. The Tram Supplier shall submit the Test Plan for agreement by the Infraco. Detailed Test Specifications for all tests shall also be submitted for agreement as part of the design scrutiny process and not less than eight weeks prior to the commencement of the tests.

The Test Plan shall be provided in Microsoft Project, together with any commentary, specifications and all results following completion of the Tram tests, in Microsoft Word/Excel format. The relevant supplied drawings shall be provided in electronic format and as hard copy. Test reports for each Tram Test shall be submitted, within two weeks following the completion of the Tram Test.

23.18.4 Tram Test Categories

The Tram Tests shall be divided into five discrete stages:

- Factory Acceptance Tests ("FAT")
- Delivery Acceptance Tests ("DAT")
- Site Commissioning Tests ("SCT")
- System Integration Tests ("SIT")
- System Acceptance Tests ("SAT")

With the exception of the Factory Acceptance Tests, which shall be carried out at the Tram Supplier's Factory, all other tests are to be carried out after the Trams are delivered to the Depot. All the tests are to be carried out by the Tram Supplier, except for the System Integration and System Acceptance Tests, which will be managed by Infraco.

Each category of Tram test can comprise two sub-categories:

- Type tests shall be performed to demonstrate that the vehicle design complies with the relevant section of these Employer's Requirements and all relevant Legislation and regulations;
- Routine tests shall be carried out on each vehicle prior to delivery/handover. The routine tests shall include the agreed measurements and checks to confirm the compliance of each Tram.

The Tram Supplier shall provide all necessary support to the Infraco during the testing and commissioning activities in Edinburgh, from the delivery of the first Tram and until the completion of the System Acceptance Tests. This will include input to the development of the necessary specifications and procedures. The support for the Tram tests to be undertaken in Edinburgh shall include, but be not be limited to, a testing manager and technicians (who will be based in Edinburgh throughout the delivery and testing of the trams), full logistics support for the despatch of urgent and routine spares during the testing process, documentation authors and administrative support for the production and control of test specifications, reports, and supporting documentation.

23.18.5 Test Certificates

Upon the successful completion of each of the Tram tests the Tram Inspector will issue the following test certification:

- Factory Acceptance Type Test Certificate;
- Factory Acceptance Routine Test Certificate;
- Certificate of Tram Delivery; and
- Site Commissioning Type Test Certificate.

Upon successful completion of all the tests for any individual Tram the Tram Inspector will issue the following test certification:

- Certificate of Tram Commissioning.

23.19 Factory Acceptance Tests (FAT)

Factory Acceptance Tests– This group of tests shall be undertaken at the Tram Supplier's Factory and upon successful completion the Tram Supplier will be issued with a Factory Acceptance Type Test Certificate and/or Factory Acceptance Routine Test Certificate by the Tram Inspector. The Factory Acceptance Tests shall be conducted in accordance with the Tram Manufacturing, Delivery Programme and the Test Plan. The FAT will be broken down into Factory Acceptance Type Tests and a series of Factory Acceptance Routine Tests and will comprise both static inspections and dynamic tests. The Factory Acceptance Type Tests shall be undertaken on a single Tram. This shall be the first Tram unless agreed otherwise in writing by the Tram Inspector.

Static inspections and tests shall be conducted at the Tram Supplier's Factory or at the sub-suppliers' premises during normal working hours during which the Tram Inspector will be entitled to inspect, examine and witness testing of all major systems, sections, apparatus, equipment, components, internal seating, fixtures and fittings and devices, including all structural, electrical, hydraulic and other major components and assemblies (except where the items concerned have been previously tested to the Tram Inspector's satisfaction and the appropriate test certificate issued).

Dynamic tests shall be conducted on the test track at the Tram Supplier's Factory or an alternative location subject to the Tram Inspectors agreement.

The Tram Inspector shall be given adequate prior notice of all tests. **tie** may, at its sole discretion, waive its right to attend or witness any test.

Whether or not the Tram Inspector is in attendance the Tram Supplier shall keep, and make available to the Tram Inspector on request, true and accurate records of the tests, the performance of the Tram during such tests, and any faults which developed or became apparent during the course of such tests.

The Tram Inspector may require evidence that the Tram has operated an agreed number of kilometres/hours in order to fulfil the requirements of the Test and Commissioning Plan under the agreed test track conditions without major faults or breakdown and has met the performance standards set out in this section throughout such period before issuing the Factory Acceptance Routine Test Certificate and/or Factory Acceptance Type Test Certificate. The distance travelled during the dynamic test on the test track will be limited and the main objective will be to check functions and performances not endurance, hence the distance travelled will relate to an agreed schedule to prove these functions.

The Factory Acceptance Routine Tests and the Factory Acceptance Type Tests referred to in the following tables shall include such examinations and tests as the Tram Inspector may reasonably require to satisfy himself that the Trams qualify or do not qualify for a Factory Acceptance Routine Test Certificate and/or and a Factory Acceptance Type Test Certificate. This will include but not be limited to; the checking of individual manufacturing and inspection records, module and sub-assembly tests including as-built dimensional checks where appropriate, for major items such as but not limited to bogie frames, wheel sets, traction and brake equipment.

The Tram Supplier shall make available to the Tram Inspector throughout the Factory Acceptance Routine Tests and/or Factory Acceptance Type Tests qualified staff and, where appropriate, its major sub-contractors to conduct, supervise and record the results of all such inspections, tests and examinations as are referred to in this document and to respond to all enquiries about the condition or performance of the Trams or its major sub-systems.

Table 48 - Factory Acceptance Tests: Static Type Tests

TEST	LOCATION	EN 50215 Reference	COMMENTS
Overall dimensional checks	Static test, at the Tram Supplier's Factory	8.1	To include external static envelope, internal dimensions, door widths and openings.
General examination and security check.	Static test, at the Tram Supplier's Factory		To establish accuracy and security of fixing of fixtures and fittings,
Coefficient of flexibility	Static test, at the Tram Supplier's Factory	8.2	Static test with a maximum cant of 100mm simulated. Horizontal and vertical flexibility.
Lifting ability	Static test, at the Tram Supplier's Factory	8.3	Body Lifting and major component removal. Bogie handling.
Tram weight	Static test, at the Tram Supplier's Factory	8.4	Tram and axle weights, including individual wheel and axle loading. Load testing of the complete vehicle and the checking of critical dimensions and clearances under a range of loading conditions. Suspension deflections and door entrance height measurement.
Sealing	Static test, at the Tram Supplier's Factory	8.5	Resistance of body structure to water ingress, humidity and snow.
Electrical insulation	Static test, at the Tram Supplier's Factory	8.6	High voltage insulation tests. Withstand and impedance of all cabling.
Bonding & return circuits	Static test, at the Tram Supplier's Factory	8.7	Continuity and integrity of all safety earth bonds and return current circuits.
Hydraulic system	Static test, at the Tram Supplier's Factory	8.9	Pumps and pipe-work. Pressure tests and leakage.
Braking System	Static test, at the Tram Supplier's Factory	8.10	Friction brake system

TEST	LOCATION	EN 50215 Reference	COMMENTS
Parking brake	Static test, at the Tram Supplier's Factory	8.11	Clamping force measurement
Auxiliary Power Supply	Static test, at the Tram Supplier's Factory	8.12	Power supplies and associated equipment.
Battery charging system	Static test, at the Tram Supplier's Factory	8.13.1	Batteries, battery chargers and associated equipment. Battery capacity for emergency working.
Auxiliary and control system	Static test, at the Tram Supplier's Factory	8.14	Vehicle control and management system. Software validation. Drivers' controls and instruments.
Doors	Static test, at the Tram Supplier's Factory	8.14.3	Passenger Doors, driver's doors. Emergency access and egress. Operation and timing.
Heating, ventilation & air-conditioning	Static test, at the Tram Supplier's Factory	8.14.4	System operation and effectiveness at the ambient conditions of the test location Thermostats, air flows. Hot/cold areas.
Lighting	Static test, at the Tram Supplier's Factory	8.14.5	Interior and exterior lighting.
Monitoring equipment	Static test, at the Tram Supplier's Factory	8.14.7	CCTV System, cameras and displays.
Event recorder	Static test, at the Tram Supplier's Factory	8.14.7	OTMR, (as far as practicable at the test location).
Communications and passenger information systems	Static test, at the Tram Supplier's Factory	8.14.7	Radios, PA, emergency communications (as far as practicable at the test location). Warning tones. Passenger information system. Passenger Emergency Help Points.
Configuration control	Static test, at the Tram Supplier's Factory	8.14.8	Determination of defined software and firmware status for all sub-systems. Modification status for all major and critical components and others as appropriate.

TEST	LOCATION	EN 50215 Reference	COMMENTS
Traction system	Static test, at the Tram Supplier's Factory	8.16	Motors, gearboxes, control equipment, power supplies and current collection.
Tram control system	Static test, at the Tram Supplier's Factory	8.16	Tram central control system and interfaces, fault monitoring and diagnostics.
Operability and maintainability	Static test, at the Tram Supplier's Factory	8.17	Verification of conformity with the proposed and agreed design. Operator and maintainer access to all appropriate areas.
Safety systems	Static test, at the Tram Supplier's Factory	8.19	Brake control systems, emergency brake, passenger emergency. Driver's deadman system, door safety loop. Emergency pushbutton, Track brakes. Horns/warning devices.
Windscreen washers, wipers and demisters	Static test, at the Tram Supplier's Factory	9.18	System operation and effectiveness, demisters.
Pantograph	Static test, at the Tram Supplier's Factory	9.12	Operation. Contact forces.
Sanding system	Static test, at the Tram Supplier's Factory		System operation. Sand delivery rate. Coherence between VTCU output and the correct sanding unit.
Flange lubrication system.	Static test, at the Tram Supplier's Factory	9.11	Set-up of equipment.
Visual examination of all client defined features	Static test, at the Tram Supplier's Factory	HMRI, RVAR	Interior layout, seating, livery and signage.
Emergency coupler	Static test, at the Tram Supplier's Factory		Check of mountings / space envelope. manual operation.

Table 49 - Factory Acceptance Tests: Dynamic Type Tests

TEST	LOCATION	EN50215 Reference	COMMENTS
Traction system performance	Dynamic test, at the Tram Supplier's Factory test track	9.1	Dynamic performance, acceleration and braking rates. Jerk rates. Current collection. Degraded modes. Speed attainment. Power consumption. Wheelslip correction and sanding. Simulated locked axle detection
Braking system	Dynamic test, at the Tram Supplier's Factory test track	9.3	Friction brake system, service and emergency deceleration rates and stopping distances. Dynamic brake operation and blending with friction brake, jerk rates. Wheelslide correction and sanding. Track brake operation.
Thermal capacity	Dynamic test, at the Tram Supplier's Factory test track	9.4	Temperature rise monitoring of traction, braking & auxiliary equipment during repeated duty cycles. Including degraded modes and emergency duty.
Motion resistance	Dynamic test, at the Tram Supplier's Factory test track	9.5	Demonstration/derivation of Tram resistance to motion.
Coupling test	Dynamic test, at the Tram Supplier's Factory test track	9.8	Coupled Tram operation with emergency couplers, as far as practical and subject to availability of two Trams.
Ride quality	Dynamic test, at the Tram Supplier's Factory test track	9.9	Assessment of Tram ride quality, (providing that the test is meaningful at this location).
Flange lubrication system.	Dynamic test, at the Tram Supplier's Factory test track	9.11	System operation.
Pantograph	Dynamic test, at the Tram Supplier's Factory test track	9.12	Operation, Functional check.

TEST	LOCATION	EN50215 Reference	COMMENTS
Electromagnetic compatibility	Dynamic test, at the Tram Supplier's Factory test track	9.14	Electromagnetic radiation and susceptibility of vehicle systems. See also EN 50121, within the constraints of the test track.
Voltage interruption and jump	Dynamic test, at the Tram Supplier's Factory test track	9.15	Reaction of traction/dynamic brake/auxiliary power systems to supply voltage interruptions jumps. Operation over the full-specified voltage range covered by the type test certificate of the traction and auxiliary equipment (as far as practicable at the test location).
Windscreen washers, wipers and demisters	Dynamic test, at the Tram Supplier's Factory test track	9.18	System operation and effectiveness, including demisters.
Tram control system	Dynamic test, at the Tram Supplier's Factory test track	9.19	Interfaces between traction, braking, auxiliary, control and safety systems. Tram management systems, displays and diagnostics.
Monitoring equipment	Dynamic test, at the Tram Supplier's Factory test track	9.19	CCTV System, cameras and displays.
Event recorder	Dynamic test, at the Tram Supplier's Factory test track	9.19	OTMR, (as far as practicable at the test location).
Communications & passenger information systems	Dynamic test, at the Tram Supplier's Factory test track	9.19	Radios, PA, emergency communications. Warning tones. Passenger information system as far as practicable at the test location.
Safety systems	Dynamic test, at the Tram Supplier's Factory test track	8.19	Brake control systems, emergency brake, passenger emergency. Driver's deadman system, door safety loop and speed inhibit. Emergency pushbutton, Track brakes. Horns/warning devices. Speedometer calibration.

TEST	LOCATION	EN50215 Reference	COMMENTS
Operability & maintainability	Dynamic test, at the Tram Supplier's Factory test track	8.17	Demonstration of degraded modes
Parking brake	Dynamic test, at the Tram Supplier's Factory test track	8.11	System operation and pull away test
Noise and vibration	Dynamic test, at the Tram Supplier's Factory test track	9.16	Noise and vibration measurements, as far as practicable at the test location.

Table 50 - Factory Acceptance Tests: Static Routine Tests

TEST	LOCATION	EN 50215 Reference	COMMENTS
Overall dimensional checks	Static test, at the Tram Supplier's Factory	8.1.2	Reduced overall dimension check.
General examination and security check.	Static test, at the Tram Supplier's Factory		To establish accuracy and security of fixing of fixtures and fittings.
Tram weight	Static test, at the Tram Supplier's Factory	8.4.3	Tram, and axle, weights.
Sealing	Static test, at the Tram Supplier's Factory	8.5.2	Resistance of body structure to water ingress
Electrical insulation	Static test, at the Tram Supplier's Factory	8.6	High voltage insulation tests. Withstand and impedance of all cabling.
Bonding and return circuits	Static test, at the Tram Supplier's Factory	8.7	Continuity & integrity of all safety earth bonds and return current circuits.
Hydraulic system	Static test, at the	8.9	Pumps and pipe-work. Pressure tests. Leakage.

TEST	LOCATION	EN 50215 Reference	COMMENTS
	Tram Supplier's Factory		
Braking System	Static test, at the Tram Supplier's Factory	8.10.2	Friction brake system functional test including parking brake
Auxiliary power supply	Static test, at the Tram Supplier's Factory	8.12.2	Power supplies and associated equipment.
Battery charging system	Static test, at the Tram Supplier's Factory	8.13.2	Batteries, battery chargers and associated equipment.
Auxiliary and control system	Static test at the Tram Supplier's Factory	8.14.1	Tram control and management system. Drivers' controls and instruments.
Doors	Static test, at the Tram Supplier's Factory	8.14.3	Passenger doors, driver's doors. Emergency access and egress. Operation & timing
Heating, ventilation and air-conditioning	Static test, at the Tram Supplier's Factory	8.14.4	System operation and effectiveness. Thermostats, air flows. Hot/cold areas. Duct sealing. Functional check
Lighting	Static test, at the Tram Supplier's Factory	8.14.5	Interior and exterior lighting. Functional check.
Monitoring equipment	Static test,at the Tram Supplier's Factory	8.14.7	CCTV System, cameras and displays.
Event recorder	Static test, at the Tram Supplier's Factory	8.14.7	OTMR, (as far as practicable at the test location).
Communications and passenger information systems	Static test, at the Tram Supplier's Factory	8.14.7	Radio, PA, emergency communications (as far as practicable). Warning tones. Passenger information system.
Configuration control	Static test, at the Tram Supplier's Factory	8.14.8	Verification of defined software and firmware status for all sub-systems. Modification status for all major and critical components and others as appropriate.

TEST	LOCATION	EN 50215 Reference	COMMENTS
Traction system	Static test, at the Tram Supplier's Factory	8.16	Motors, gearboxes, control equipment, power supplies and current collection.
Tram control system	Static test, at the Tram Supplier's Factory	8.16	Tram central control system and interfaces, fault monitoring and diagnostics.
Operability and maintainability	Static test, at the Tram Supplier's Factory	8.17	Fault handling, diagnostics and indications. Safety isolations.
Safety systems	Static test, at the Tram Supplier's Factory	8.19	Brake control systems, emergency brake, passenger emergency. Driver's deadman system, door safety loop. Emergency pushbutton, Track brakes. Horns/warning devices.
Windscreen washers, wipers and demisters	Static test, at the Tram Supplier's Factory	9.18	Functional check including demisters.
Pantograph	Static test, at the Tram Supplier's Factory	9.12	Operation. Contact forces
Sanding system	Static test, at the Tram Supplier's Factory		System operation. Sand delivery rate.
Flange lubrication system.	Static test, at the Tram Supplier's Factory	9.11	Set-up of equipment.
Visual examination of all client defined features	Static test, at the Tram Supplier's Factory		Interior layout, seating, livery and signage.

Table 51 - Factory Acceptance Tests: Dynamic Routine Tests

TEST	LOCATION	EN 50215 Reference	Comments
Traction system performance	Dynamic test, at the Tram Supplier's Factory test track	9.1.2	Dynamic performance, acceleration and braking rates. Current collection. Speed attainment. Wheelslip correction and sanding.
Braking system	Dynamic test, at the Tram Supplier's Factory test track	9.3.2	Friction brake system, service and emergency deceleration rates and stopping distances. Dynamic brake operation and blending with friction brake, Wheelslide correction and sanding. Track brake operation.
Flange lubrication system.	Dynamic test, at the Tram Supplier's Factory test track	9.11	System operation, as far as practicable.
Tram control system	Dynamic test, at the Tram Supplier's Factory test track	9.19	Interfaces between traction, braking, auxiliary, control and safety systems. Tram management systems, displays and diagnostics.
Monitoring equipment	Dynamic test, at the Tram Supplier's Factory test track	9.19	CCTV System, cameras and displays.
Event recorder	Dynamic test, at the Tram Supplier's Factory test track	9.19	OTMR, (as far as practicable at the test location).
Communications and passenger information systems	Dynamic test, at the Tram Supplier's Factory test track	9.19	PA, emergency communications. Warning tones. Passenger information system (as far as practicable at the test location).
Safety systems	Dynamic test, at the Tram Supplier's Factory test track	8.19	Brake control systems, emergency brake, passenger emergency. Driver's deadman system, door safety loop and speed inhibit. Emergency pushbutton, Track brakes. Horns/warning devices. Speedometer calibration.

23.20 Delivery Acceptance Tests (DAT)

These tests shall be carried out by the Tram Supplier upon the delivery of each Tram. They shall establish that the Tram has not been damaged or affected in any way by the delivery process and that it remains in the condition in which it was inspected prior to despatch from the Tram Supplier's factory. On satisfactory completion of the DAT the Tram Inspector will issue a Certificate of Tram Delivery.

TEST	LOCATION	EN 50215 Reference	Comments
Overall dimensional checks	Static test, at the Depot		Reduced to any parts or components which will been adjusted/removed during the transport.
General examination and security check.	Static test, at the Depot		To establish accuracy and security of fixing of all fixtures and fittings, transit damage. Visual inspection
Hydraulic system	Static test, at the Depot	8.9	Pumps and pipe-work. Visual inspection and checks for leakage.
Tram weight	Static test, at the Depot		Measurement of as-delivered tare weight, plus sand and fluids.

Table 52 – Table showing Delivery Acceptance Tests

23.20.1 Site Commissioning Tests

The Site Commissioning Type Tests shall be undertaken on the Tram(s) as appropriate, when they are delivered to the Depot and following the completion of the DAT. Upon successful completion the Tram Supplier will be issued with a Site Commissioning Type Test Certificate by the Tram Inspector. The tests shall comprises Static and Dynamic tests and will include, but not be limited to, the tests referred to in the tables on the following page.

For the avoidance of doubt the Tram Inspector shall not issue a Type Test Certificate even if by a lack or fault of the system infrastructure a test is failing or cannot be executed.

Table 53 – Site Commissioning Tests: Static Type Tests

TEST	LOCATION	EN 50215 Reference	Comments
Monitoring equipment	Static test, at the Depot	8.14.7	CCTV System, cameras and displays.
Tram location and detection system	Static test, at the Depot	8.14.7	Tram location and detection system.
Event recorder	Static test, at the Depot	8.14.7	OTMR
Communications and passenger information systems	Static test, at the Depot	8.14.7	Radios, PA, emergency communications. Warning tones. Passenger information system.
Noise.	Static test, at the Depot	8.18	Noise (outstanding from factory), internal & external. At same time as dynamic and performed on specified track section.
Safety systems	Static test, at the Depot	8.19	Brake control systems, emergency brake, passenger emergency. Driver's Deadman system, door safety loop. Emergency pushbutton, Track brakes. Horns/warning devices. Speedometer
Pantograph	Static test, at the Depot	9.12	Operation. Contact forces.
Electromagnetic compatibility	Static test, at the Depot	9.14	Electromagnetic radiation and susceptibility of Tram systems. Completion of the Tram FAT type test.

Table 54 – Site Commissioning Tests: Dynamic Type Tests

TEST	LOCATION	EN 50215 Reference	Comments
Traction system performance	Dynamic test, at designated test site	9.1.1	Dynamic performance, acceleration & braking rates. Jerk rates. Acceleration and control on gradients. Roll-back protection. Current collection. Speed attainment. Power consumption. Wheelslip correction and sanding. Emergency duty.
Braking system	Dynamic test, at designated test site	9.3.1	Friction brake system, service and emergency deceleration rates and stopping distances. Dynamic brake operation and blending with friction brake, jerk rates. Wheelslide correction and sanding. Track brake operation.
Thermal capacity	Dynamic test, at designated test site	9.4	Temperature rise monitoring of traction, braking and auxiliary equipment during repeated duty cycles. Including degraded modes and emergency duty.
Tram/track interaction	Dynamic test, at designated test site	9.8	Wheel rail interaction. Load testing of the complete vehicle and the checking of critical dimensions and clearances under a range of loading conditions. Suspension deflections and inter-vehicle clearances. Safety against derailment. Coupled Tram operation
Ride quality	Dynamic test, at designated test site	9.9	Assessment of Tram ride quality.
Kinematic gauging	Dynamic test, at designated test site	9.10	Dynamic performance, kinematics and gauging. Load testing of the complete vehicle and the checking of critical dimensions, swept path and clearances under load conditions. Suspension deflections. Pantograph sway,

TEST	LOCATION	EN 50215 Reference	Comments
Flange lubrication system.	Dynamic test, at designated test site	9.11	System operation.
Pantograph	Dynamic test, at designated test site	9.12	Included in Kinematic gauging
Electromagnetic compatibility	Dynamic test, at designated test site	9.14	Electromagnetic radiation and susceptibility of Tram systems.
Noise and vibration	Dynamic test, at designated test site	9.16	Noise and vibration tests performed on the specified section of track.
Safety Systems	Dynamic test, at designated test site	8.19	Brake control systems, emergency brake, passenger emergency. Driver's deadman system, door safety loop and speed inhibit. Emergency pushbutton, Track brakes. Horns/warning devices. Speedometer. Event Recorder (OTMR).
Tram location and detection system	Dynamic test, at designated test site	8.14.7	Tram location and detection system.
Operability and maintainability	Dynamic test, at designated test site	8.17	Coupling test and recovery.
Parking brake	Dynamic test, at steepest gradient	8.11	System operation, effectiveness on steepest available gradient.

The Site Commissioning Routine Tests shall be performed on each Tram and comprise static and dynamic tests. This shall comprise of a full functional test, both statically and dynamically, of the Tram, including inspection, examination or testing of all major systems, sections, apparatus, equipment, components, internal seating, fixtures and fittings and devices (including testing the same whilst in operation); with the further inclusion of electrical, hydraulic and other major components and assemblies, as far as practical, at the test location.

The Site Commissioning Routine Test will be designed to establish that each individual tram functions in accordance with the design. It is not intended that the routine test should be a full re-working of the either the type test or the factory tests merely confirmation through carefully targeted testing that the build was correct., It will confirm that it is in a suitable condition to operate safely on the system. Upon successful completion of the Routine Tests the Tram Supplier will be issued with a Certificate of Tram Commissioning by the Tram Inspector.

Whether or not the Tram Inspector is in attendance at a Site Commissioning Test, the Tram Supplier shall keep and make available to the Tram Inspector on request true and accurate records of the Site Commissioning Test conducted, the performance of the Tram during such tests and any faults which developed or became apparent during the course of such tests.

23.20.2 Re-Testing

The Tram Supplier shall, if requested by the Tram Inspector, undertake such further examinations and tests as the Tram Inspector may reasonably require to satisfy himself that a Tram and/or the Trams qualify for a Certificate of Tram Commissioning

23.20.3 Testing Support

The Operator shall make the following available where required by the Testing and Commissioning Plan, (and agreed by Infraco):

- Depot and workshop facilities at the Depot;
- Reasonable assistance from its drivers, maintenance and other staff; and
- Track, power supplies and other facilities, as agreed, to meet the needs of the Tram Testing and Commissioning Plan.

All parties involved and their respective representatives and staff shall:

- Observe such reasonable requirements as may be notified in writing by the Operator or to preserve health and safety, protect the Trams against damage and avoid unnecessary disruption to the Operator's operations.

- Use all reasonable endeavours to avoid risks to health and safety, damage to the Trams or unnecessary disruption to the Operator's operations.

- The Tram Supplier shall make available throughout the Tram Commissioning Tests qualified staff from the Tram Supplier's organisation and, where appropriate, its major sub-contractors to:

  - Conduct, supervise and record the results of all such inspections, tests and examinations as are referred to in this document; and

- Respond to all reasonable enquiries about the condition or performance of the Trams or the major systems, sections, apparatus, equipment, components, internal seating, fixtures and fittings and devices, including all structural, electrical, hydraulic and other major components and assemblies and to rectify any failures of the same.

Table 55 – Site Commissioning Tests: Static Routine Tests

TEST	LOCATION	EN 50215 Reference	Comments
Braking system	Static test, at the Depot	8.10.2	Friction brake system, including parking brake
Monitoring equipment	Static test, at the Depot	8.14.7	CCTV System, cameras and displays.
Event recorder	Static test, at the Depot	8.14.7	OTMR,
Tram location and detection system	Static test, at the Depot	8.14.7	Tram Location and Detection equipment.
Communications and passenger information	Static test, at the Depot	8.14.7	Radios, PA, emergency communications. Warning tones. Passenger information system.

TEST	LOCATION	EN 50215 Reference	Comments
systems			
Configuration control	Static test, at the Depot	8.14.8	Verification of defined software and firmware status for all sub-systems. Modification status for all major and critical components and others as appropriate.
Traction system	Static test, at the Depot	8.16	Motors, gearboxes, control equipment, power supplies and current collection.
Safety systems	Static test, at the Depot	8.19	Brake control systems, emergency brake, passenger emergency. Driver's deadman system, door safety loop. Emergency pushbutton, Track brakes. Horns/warning devices. Speedometer.
Windscreen washers, wipers and demisters	Static test, at the Depot	9.18	System function
Pantograph	Static test at the Depot		Contact forces and operation.
Sanding system	Static test, at the Depot		System function.
Doors	Static test at the Depot		Cycle times.
Heating, ventilation and air-conditioning	Static test, at the Depot	8.14.4	Functional check

Table 56 – Site Commissioning Tests: Dynamic Routine Tests

TEST	LOCATION	EN 50215 Reference	Comments
Traction system performance	Dynamic test, at designated test site	9.1.2	Dynamic performance, acceleration & braking rates. Speed attainment. Operation through supply interruptions and at varying line voltages.
Braking system	Dynamic test, at designated test site	9.3.2	Friction brake system, service and emergency deceleration rates and stopping distances. Dynamic brake operation and blending with friction brake, sanding. Track brake operation.
Ride quality	Dynamic test, at designated test site	9.9.2	Subjective ride test to discern any obvious ride irregularity.
Flange lubrication system.	Dynamic test, at designated test site	9.11	System function.
Noise and vibration	Dynamic test, at designated test site	9.16.2	Subjective noise and vibration assessment to discern any obvious irregularity.
Tram control system	Dynamic test, at designated test site	9.19	Interfaces between traction, braking, auxiliary, control and safety systems. Tram management systems, displays and diagnostics.
Monitoring equipment	Dynamic test, at designated test site	9.19	CCTV System, cameras and displays.
Event recorder	Dynamic test, at designated test site	9.19	OTMR
Tram location and	Dynamic	9.19	Tram location equipment

TEST	LOCATION	EN 50215 Reference	Comments
detection system	test, at designated test site		
Communications and passenger information systems	Dynamic test, at designated test site	9.19	Radios, PA, emergency communications. Warning tones. Passenger information system (as appropriate).
Safety systems	Dynamic test, at designated test site	8.19	Brake control systems, emergency brake, passenger emergency. Driver's deadman's system, door safety loop and speed inhibit. Emergency pushbutton, Track brakes. Horns/warning devices. Speedometer calibration.
Parking brake	Dynamic test, at designated test site	8.11	System function Part of braking test

23.21 System Integration Tests (SIT)

The System Integration Tests consist of tests carried out to prove that the ETN as a whole can function as intended. All infrastructure, operation and control systems shall be exercised during these tests. The Tram Supplier will provide reasonable input to the development of the SAT specifications as well as participation in, and support to, the tests whenever reasonable technical support is needed in reference to the Trams.

The System Integration Tests will include, but will not be limited to, the following:

- Comprehensive gauging and dimensional checks under a range of loading conditions;
- Run time tests;
- Interface checks to all items of workshop plant and equipment including the wheel lathe, Tram washing machine, sanding plant, cranes and hoists;
- Access and handling checks for all major items of equipment, sub-assemblies and major capital spares items;
- Validation of the radio communication system; and
- Validation of the tram position detector system.

The System Integration Tests will involve carrying out gauging runs over all parts of the ETN in order to establish that the Trams (when operating individually or in conjunction with other Trams) accord with the Tram Section and the agreed detailed interface arrangements in terms of the alignment geometry, clearances, loads, pantograph dynamics, wheel rail interface, traction power system, communications and route setting equipment, compliance with operational procedures and Tram performance values. In particular it shall be demonstrated that there is sufficient clearance between passing Trams on the Network and between Trams and other Network equipment and installations to ensure that the Trams can be operated safely and without damage to themselves and to the other parts of the System.

There shall be static and dynamic tests to verify that the pantograph conforms to the requirements of the Employer's Requirements.

There shall be a series of tests to demonstrate the ability of one Tram to recover another failed Tram, including on the most severe gradient on the ETN and potentially in a degraded mode.

The testing of the systems, including but not limited to; power supplies, overhead line, Depot equipment, and EMC tests will require the use of a number of Trams running at the same time.

Table 57 – System Integration Tests: Static Type Tests

TEST	LOCATION	EN 50215 Reference	Comments
Lifting ability	Static test, at the Depot	8.3	Body Lifting and major component removal. Bogie handling.
Battery charging system	Static test, at the Depot	8.13	Battery access for maintenance and topping up. Operation and suitability of external battery chargers.
Monitoring equipment	Static test, at the Depot	8.14.7	CCTV System, Interface with the Depot systems.
Event recorder	Static test, at the Depot	8.14.7	OTMR, Interface with the Depot systems.
Tram location and detection system	Static test, at the Depot	8.14.7	Tram location equipment.
Communications and passenger information systems	Static test, at the Depot	8.14.7	Radios, PA, emergency communications. Warning tones. Passenger information system. Interface with the Depot systems.
Traction system	Static test, at the Depot	8.16	Power supply interaction.
Operability and maintainability	Static test, at the Depot	8.17	Review and demonstration of accessibility and removal of components. Fault handling, diagnostics and indications. Safety issues.
Noise and vibration.	Static test, at the Depot	8.18	Noise and vibration levels, internal and external.
Pantograph	Static test, at	9.12	Operation. Contact forces.

TEST	LOCATION	EN 50215 Reference	Comments
	the Depot		
Sanding system	Static test, at the Depot		Refilling system. Verification that the fill level can be observed from inside the tram.
Flange lubrication system.	Static test, at the Depot	9.11	Refilling.
Visual examination of all client defined features	Static test, at the Depot	HMRI, RVAR	Interior layout, seating, livery and signage
Electromagnetic compatibility	Static test, at the Depot	9.14	Electromagnetic radiation and susceptibility of vehicle systems.

Table 58 – System Integration Tests: Dynamic Tests

TEST	LOCATION	EN 50215 Reference	Comments
Tram/track interaction	Dynamic test, at designated test site	9.8	Wheel rail interaction. Load testing of the complete vehicle and the checking of critical dimensions and clearances under a range of loading conditions. Suspension deflections and inter-vehicle clearances.
Kinematic gauging	Dynamic test, at designated test site	9.10	Dynamic performance, kinematics and gauging. Load testing of the complete vehicle and the checking of critical dimensions, swept path and clearances under a range of loading conditions. Suspension deflections. RVAR and HMRI requirements.
Platform gauging	Dynamic test, at designated test site	9.10	Platform stepping distance and heights, tare and loaded conditions. RVAR requirements.
Flange lubrication system.	Dynamic test, at designated test site	9.11	Effectiveness.
Pantograph	Dynamic test, at designated test site	9.12	Operation, contact forces, sway. OLE deflection.
Electromagnetic compatibility	Dynamic test, at designated test site	9.14	Electromagnetic radiation and susceptibility of vehicle systems.
Voltage interruption and jump	Dynamic test, at designated test site	9.15	Reaction of traction/dynamic brake/auxiliary power systems to supply voltage interruptions, jumps and short circuits. Operation over full-specified voltage range.
Noise and vibration.	Dynamic test, at designated test site	9.16	Noise and vibration levels.
Monitoring equipment	Dynamic test, at designated	9.19	CCTV System, cameras and displays.

TEST	LOCATION	EN 50215 Reference	Comments
	test site		
Tram location and detection system	Dynamic test, at designated test site	9.19	Tram location equipment, throughout the available route. Road junction and point motor control.
Communications and passenger information systems	Dynamic test, at designated test site	9.19	Radios, PA, emergency communications. Reception and effective communication with the Depot throughout the available route. Warning tones. Passenger information system
Operability and maintainability	Dynamic test, at designated test site	8.17	Review of all systems as required. Demonstration of degraded modes and recovery practices. Coupling test
Traction supply	Dynamic test, at designated test site		Sub-station load tests, sub-station outages. Regeneration. Overload protection, touch voltage and stray current tests.
Section run times	Dynamic test, throughout the System		Proving of the System infrastructure in stages as it becomes available to operate.

23.21.1 System Acceptance Testing

Tram testing will be undertaken in support of the system acceptance testing set out in these Employer's Requirements.

24 Trams

24.1 Scope

This section defines the requirements for Trams that are applicable to the Edinburgh Tram Network and with which the Infraco must comply.

24.2 General Technical Specification

The Trams shall be of a high quality in design and construction and comply with the following general design criteria:

- High safety standards including, but not limited to:
  - Compliance with Railway Safety Publication 2 - Guidance on Tramways, issued by the Office of the Rail Regulator;
  - Compliance with Rail Vehicle Accessibility Regulations, 1998;
- High reliability, minimum maintenance requirement and ease of repair;
- Proven design and technology;
- Low floor access;
- Easy to clean;
- Modern and attractive appearance;
- Low weight;
- Low environmental impact;
- Meets access requirements for the disabled;
- Minimum use of energy;
- The Trams will be required to have a minimum operating capability of at least 100,000 km per year; and

The Trams shall be designed to have a minimum service life in accordance with Section 6 of these Employer's Requirements.

The Trams shall be articulated in order to negotiate the track alignment. They will be fully bi-directional and capable of being driven from either end and shall have passenger doors on both sides. They will be capable of being operated by one person.

Normal service Trams shall comprise one vehicle, but shall be capable of running coupled together for the purpose of one Tram recovering another failed Tram from any point on the system.

The Tram should be designed and constructed in accordance with a Quality Plan (as prescribed under ISO9001), which should also include a delivery plan and a Test Plan.

A full-scale Tram mock-up shall be provided to demonstrate areas critical to operation and access as part of the formal design process and for use in public consultation. The mock-up shall include the entire cab and a representative portion of one saloon, including a vestibule with at least one operational pair of bi-parting doors and space reserved for wheelchair use. The mock-up shall show the exterior form and livery. The mock-up shall be weatherproof and shall be delivered to a location in Edinburgh designated by **tie.**

24.3 Wheel / Rail Interface

The Trams shall have a wheel profile and suspension characteristic that is compatible with the rail profiles used throughout the System in terms of risk of derailment, noise, wear and vibration. The wheel profile shall allow for flange running at crossings. The Tram will be designed to operate in conjunction with a track gauge of 1,435mm and a flange back-to-back dimension consistent with the rail types to be used on the Edinburgh Tram Network.

24.4 Tramway Path

Trams shall be compatible with the System track alignment and the geometric constraints as outlined in Section 26 of these Employer's Requirements, which gives the alignment criteria and the assumed Tram characteristics. From this the developed kinematic envelope ("DKE") calculations and any other information, to show compatibility with the alignment, shall be provided by the Infraco. The Trams shall negotiate the minimum radius horizontal and vertical curves, and maintain acceptable wheel flange wear.

Minimum clearances to existing structures, Tramstops, overhead line equipment structures and all other road furniture shall be maintained in accordance with the agreed DKE and it shall always be possible for one Tram to pass another, at any point on the system. The Infraco shall ensure that the Tram Supplier shall provide supporting information to enable a reduced DKE to be developed for use in locations where restricted speeds are or may require to be applied.

24.5 Supervisory, Control & Communications Systems

The Trams shall be fitted with equipment to automatically indicate their position to, and communicate with, a central control centre.

Additionally, a bus tracker box will be fitted.

A voice radio system will be permanently available between the driver and the central control centre. This equipment will be supplied by Infraco and will be free-issue to the Tram Supplier, to be installed and tested as part of the Tram manufacturing process.

The supply and integration of the free-issue equipment will be controlled through a system interface register, to be developed from Schedule 22 of the TSA and managed by Infraco.

All on-board systems with real-time clocks shall be updated and synchronised from a common source, throughout the working life of the Tram.

24.6 Depot Facilities

The Trams shall be maintained at the Depot and a system interface register shall be used to ensure that the Trams and the equipment provided for their routine maintenance and operation are compatible.

The Trams shall be compatible with a mechanised sand filling system at the Depot (see Section 29 of these Employer's Requirements), enabling the sand system on the Trams to be replenished within five minutes and by one driver alone. The Infraco shall ensure that the Tram Supplier shall provide a specification for the sand, and contact details for a UK-based commercial supplier of this sand.

The Trams shall have a key suiting system that provides a logical hierarchy of access to cleaners, inspectors, drivers and maintenance staff. It shall not be part of the same suite as detailed in Section 22 of these Employer's Requirements.

The Trams shall be supplied with a nominal 24VDC shore supply, socket compatible with battery charging equipment in the depot.

24.7 Electro-Magnetic Compatibility

The Trams and their sub-systems shall not generate excessive, nor be susceptible to, electro-magnetic interference and shall comply with EN 55013, EN 50121 and EN 50122 as appropriate.the requirements of the specification as detailed in section 16 of these Employer's Requirements.

24.8 Climate and Environment

The Trams shall operate normally in all climatic and environmental conditions found in the Edinburgh area on the proposed route, including operation in a marine environment having a saline atmosphere and being subject to fine wind-blown sand. This shall also include conditions where ice forms on the overhead line and wind speeds of up to 120km/h.

The Trams shall function, without deterioration in performance and for their whole design working life, within the weather conditions anticipated within the Edinburgh area as described elsewhere in Section 3.6.4 of these Employer's Requirements - taking into account the previously quoted wind speed. All equipment housings/enclosures that contain electronic equipment shall be so equipped to avoid the occurrence of condensation. The Trams shall be capable of being started up normally under the range of weather conditions as outlined above after no less than 72 hours of being left in the open in a shutdown condition.

24.9 Interface Management

The Infraco shall procure that the Tram Supplier participates in the interface engineering process. The Tram interfaces are identified in the TSA. The management of the interfaces will be carried out by Infraco using the system interface register.

24.10 Systems Assurance

The Infraco shall ensure that the Tram Supplier shall implement a System Assurance engineering process in accordance with the requirements of the Edinburgh Tram Network. This process shall cover all aspects of design, manufacture, integration, testing and commissioning of the Tram, and all interfaces with the system, to demonstrate compliance with the reliability, availability, maintainability and safety requirements of **tie**.

The Infraco shall ensure that the Tram Supplier shall follow the approach of BS EN 50126:1999 "Railway Applications – The specification and demonstration of RAMS".

The Infraco shall ensure that the Tram Supplier shall implement a reliability, availability and maintainability management process and will detail it in a Reliability, Availability and Maintainability Plan (RAMP).

The Infraco shall ensure that the Tram Supplier shall implement a System Safety Management Plan (SSMP), which shall define the process, activities and requirements for the preparation of a 'Case for Safety' during the design and handover stages of the project. The plan shall also define the system safety management organisation and the strategy to achieve the individual hazard system safety targets.

All foreseeable system safety hazards are to be identified, evaluated and recorded in a Hazard Log that will be managed and maintained throughout the project lifecycle. The Infraco shall ensure that the Tram Supplier shall implement a hazard management process to identify hazards through hazard analysis and the means to mitigate these hazards.

24.11 Noise and Vibration

Trams shall at all times meet the requirements of the **tie** Noise and Vibration Policy (NVP/001/V1.01). Trams shall operate as quietly as is reasonably possible. The proposed design shall incorporate wheel damping, side skirts with sound-deadening linings and resilient mounting of electrical equipment likely to generate noise. The Infraco shall ensure that the Tram Supplier shall provide the anticipated noise levels of the proposed Tram. Noise tests shall be carried out in Edinburgh to determine the frequency peaks generated, in particular by the wheels. The results of these tests shall be used to determine the type and extent of any tuned vibration dampers that should be fitted to the wheels.

24.12 Specific Technical Requirements

The Tram body shall be a nominal width of 2.65m externally. Note that external door sills may be required in order to comply with Rail Vehicle Accessibility Regulations.

The total Tram length shall be a nominal value of up to 44m.

The following loading conditions shall apply in this document:

- AW0 = Tram tare weight (empty car)
- AW1 = AW0 + full load of seated passengers
- AW2 = AW1 + weight of standing passengers at 4 persons/m^2

- AW3 = AW1 + weight of standing passengers at 5 persons/m_2
- AW4 = AW1 + weight of standing passengers at 6 persons/m_2
- AW5 = AW1 + weight of standing passengers at 8 persons/m^2

Where the mean passenger weight is taken to be 70.5kg.

The passenger capacity of the tram shall be at least 230 persons, of which a minimum of 80 shall be seated, on fixed seats. There shall in addition be provision for wheelchairs in accordance with Rail Vehicle Accessibility Regulations. There shall also be provision for luggage racks.

At least 66% of the floor area available for standing must be low-floor, with a height above rail level of between 300mm and 400mm. High floor areas shall be minimised. All doorways shall allow level boarding access at a height between 300-350mm above the top of the rail. The slope of the floor at the entrance shall be in accordance with disabled access regulations. Suitable means of adjustment shall be provided to compensate for wheel wear in order to remain within these limits.

The Tram shall have a maximum operating speed of up to 70km/h. However, a speed of 80km/h must be achievable, though not sustainable for a prolonged period.

The Tram structure will incorporate a strong and stiff underframe capable of supporting a buffing load in compliance with EN 12663 category V without permanent deformation. The structure shall not deform, crack, fracture, corrode or suffer loosening of rivets or bonding during the normal service life of the vehicle. It shall be, and remain, watertight against rain, passing through standing water and passing through the washing plant throughout its working life.

The tram structure shall be designed and tested to accommodate a passenger loading of AW5 as defined earlier in this clause.

All cavities in the floor structure, body sides and ceiling will be well drained and constructed in such a way that water does not collect and corrosion does not occur. Insulation material will fill all void spaces to minimise noise, vibration and heat loss.

The articulated joints will provide a wide gangway and resistance to vehicle climbing in the event of a collision. The articulation will require minimum maintenance and be capable of being dismantled to separate the Tram bodies with a minimum of equipment.

Where different metals are in contact, due regard shall be given to preventing the effects of dissimilar metal corrosion. All metal surfaces shall be treated to resist corrosion. All body panels will be interchangeable between vehicles and all exterior panels will be lined with water resistant, sound absorbing and heat insulating materials to minimise the possibility of resonance.

Easily replaceable energy absorption devices shall be provided at both ends of the Tram such that frontal and rearward collisions, at speeds up to 5 km/hr shall be fully absorbed without causing permanent deformation of the body structure. The front skirts and lower body side panels shall be mechanically fastened so as to allow easy replacement and shall be interchangeable between Trams. Each panel must be able to be replaced by one person in ten minutes.

The Trams shall be designed to be resistant to fire in accordance with the standard BS6853 Category 2, or the equivalent European Standard.

The maximum axle load at AW4 loading, and including all consumables, shall be 11.5 tonnes.

The windscreen shall be compliant to the equivalent International Regulation ECE 43 (Uniform Provisions Concerning the Approval of Safety Glazing and Glazing Materials (Rev1 08.1990). The windscreen and cab side windows shall consist of laminated glass panes made of safety glass. There should be no diffraction effects or colour distortions in the cab windows. Any glass screens dividing the driver's cab from the saloon shall be treated to minimise reflections. All internal glazing shall be made from safety glass.

The side windows (including the door windows) will be made from heat reflecting safety glass. The glazed area shall be maximised within the limits set by structural integrity, solar gain and passenger modesty. Passengers must have a clear view to the exterior whether seated or standing. Tinted windows shall be used to minimise dazzling.

The windows shall allow permeability for radio waves with frequencies for Global System for Mobile telecommunications, and other public-domain transmissions.

All windows, (including the driver's windscreen) shall be easily replaceable using standard methods and tooling available in the Depot. All glass surfaces must be replaceable within two hours and should be secured so as to be watertight and draught-proof. Bonded glass is not preferred, unless it can be demonstrated that the bonded glazed units can be easily interchanged in less than two hours. Bonding to a mechanically-fixed window frame, or securing using a rubber section, is preferred.

If the windows used are bonded, they should have a black, printed ceramic silk screen print to cover the bonding zone and protect the bonding material from ultra violet transmission, on which the ultra violet -Transmission should be less than 0,1% at 400-600 nm.

Opening hopper windows will be fitted throughout the passenger compartment. All interior glass surfaces in the Tram passenger compartments shall be fitted with Ultra Violet light reducing and shatter resisting film on the inside surface, which shall be easily replaceable as a maintenance task when required yet give good visibility when in place. This film shall also provide effective protection against damage to the glass by 'etching'-type graffiti.

24.13 Driver's Cab

The driver's cab shall be arranged so that at least 95% of adult persons can comfortably access the cab desk and all the controls located within the cab, whilst retaining the appropriate field of view out of the cab. The design of the cab shall be undertaken to good human factors practice.

The driver's cabs shall be air-conditioned and the temperature shall be thermostatically controllable by the driver. Air conditioning in both cabs shall be switched on or off from either cab. Temperature selection shall be only available from the cab in use.

An effective windscreen demisting system shall be fitted, suitable for the climatic conditions encountered in Edinburgh. The demisting system shall be able to clear the windows of condensation within ninety seconds of a cab being made operational.

The cab may extend to the full width of the Tram, and be separated from the passenger area by a glazed partition providing good passenger visibility through the cab windscreen. A mirror providing the driver with a view into the saloon (when sat at the controls) shall be provided.

An internal cab to saloon door is required, which must be lockable from the saloon side and cab side but capable of being opened at any time from inside the cab. The door must latch automatically when closed.

An inward opening, hinged and lockable external cab door may be provided. It shall be capable of being locked and unlocked from both inside and outside the cab.

The cab lighting level shall be 250-300 LUX at 1.0m above floor level. The driver shall have the control of switching this lighting on or off.

A generally translucent mesh fabric sunblind shall be provided, with an opaque strip extending 150mm up from the bottom edge. The blind must be able to be deployed by the driver whilst in the driving position. It need only be retractable at stops.

Cab windscreens and cab windows shall maximise the degree of all round vision available to the driver. A clear unobstructed view of the road/track ahead shall be provided with clear and unrestricted sight lines, particularly low down in front of the cab.

The partition between the Cab and Saloon and other glazing surfaces shall minimise the incidence of reflections at all times and in all expected environmental conditions. Blinds or curtains shall be provided to screen the saloon lighting from the cab at night.

The following features that relate to instruction of Tram drivers shall be provided:

- A Tram driver can be under instruction when a Tram is in passenger service, consequently it must be possible for an instructor and a driver to be inside the cab with the cab/saloon door closed, and the instructor must be comfortably and safely located in the cab.
- The instructor must be able to apply the Tram security brakes quickly.
- The instructor must be seated and secure in the cab to the extent that he can apply the brakes even when the Tram is performing unpredictably.
- The instructor's seat may be a portable item,supplied with the Tram.

The driver's seat, unless purpose-designed for a Tram, shall be a seat specifically designed for bus applications rather than for other vehicles such as heavy rail or heavy goods vehicles, as it must be capable of being adjusted frequently without any damage. The seat must be of ergonomic design, easy to clean and easily removable from the cab. The seat cushions shall be easily removable for cleaning.

The driver's seat must be easily adjustable so that 95% of adult persons may be seated comfortably with effective reach to the drivers' controls, and maintain unrestricted lines of sight through the windscreen.

Both cabs on each Tram shall provide stowage for:

- A points handle, typically a steel bar about 1m long (supplied by others). This must be placed so the driver can easily take it with him when leaving the cab, and so it must be stowed and un-

stowed without risk of damage to the cab finishes or equipment. When not in use it must be secured so as to prevent becoming a hazard in the event of an emergency stop or a collision.

- A first-aid box (supplied by others)
- A fire extinguisher to be supplied with the Tram.
- A place to hang a driver's coat, where it will not interrupt the view in any direction.
- A place to hold two A5 ring binders of timetables, information and procedures.
- A place to clip an A5 sheet of paper, which can be conveniently referred to by the driver (whilst at a Tram stop), and which does not obscure any controls or gauges.
- A hand lamp (supplied by others)

Provision shall be made within each cab to allow two operational personnel to separately and securely store personal effects

There shall be provision in each cab for a secure cash box (supplied by others). The dimensions of this are to be provided by **tie**.

There shall be charging points in each cab for a portable radio and a hand-held ticket machine.

The tram shall be fitted with holders in each cab for a destination board, for the purpose of indicating additional destinations of public interest. This board is to be placed in position by the driver so as to be seen from in front of the tram. The dimensions of the board are to be provided by **tie**.

24.14 Tram Controls

The layout of controls, switches and instrumentation shall be agreed with **tie** on the mock-up, by use of design submittals and the use of the mock-up. The desk panels shall be made of material that is wear resistant and free from reflections.

It shall be possible to drive the Tram from each cab. Insertion of the driver's key and the operation of one switch in either cab shall switch on all of the equipment needed to enable the Tram to be driven from that cab. Essential sub-systems shall not be separately switched.

The Tram acceleration and braking shall be controlled from a combined controller handle, incorporating a dead man safety device. This shall normally be locked out of use until released by the driver's key, which shall remain captive in the controller until the controller is placed in the off

position. It shall not be possible to operate the Tram with more than one controller in use at any one time.

The controller shall include a slow speed mode, for driving through the Tram washing plant.

The following controls shall be conveniently placed for the driver's free hand when the Tram is in motion:

First priority

- Audible warnings (bell, horn);
- Track brake (in addition to the emergency brake on the driver's controller);
- Indicators;
- Pantograph emergency drop.

Second priority

- Manual sand (in addition to the automatic sanding system);
- Windscreen washer and wiper controls;
- Headlamp dip/main beam;
- Panic Alarm;
- Tram punctuality display against timetable or headway.

The following controls shall be conveniently placed for use when the Tram is at a Tram stop:

- Door controls;
- Rear-view normal mode push-button;
- Tram Ready To Start (junction calling when at a Tramstop close to the junction);
- Hazard and marker lights;

- Air-conditioning and temperature controls;
- Saloon heating control;
- Fault reset push-button;
- Public Address controls;
- Radio controls;
- Cab light switch;
- Saloon lighting;
- Pantograph control;
- Windscreen demister.

At least one cab shall display an odometer calibrated in km. Both cabs shall display a speedometer calibrated in km/h and mph.

Windscreen wiper control shall be by means of a multi-position switch having intermittent, continuous slow and continuous fast positions. Wipers shall be self-parking to a position close to and parallel with the edge of the windscreen.

There shall also be a separate push button, which operates wipers and windscreen washers for as long as it is held down, and provides one additional sweep of the wipers after it is released.

Each cab shall be equipped with an indicator to inform the driver whether the Tram is running early or late, and by how much.

24.15 Rear View Equipment

Rear-views shall be provided by close circuit television equipment which shall function as follows:

The 'normal' view, displayed whenever the Tram is in motion, shall have two screens in the cab integrated into the desk: one on the left side of the desk and one its right. The images in them shall be the same as would be seen in mirrors.

The 'Tram stop' view shall be displayed in the time between the doors being enabled at a stop and all doors being proved closed. In this view, the monitor on the platform side (the side on which the doors are enabled) shall show the same as in normal view. The other monitor shall display the image from the rear camera on the platform side, to enable the driver to view passengers disembarking and embarking and to ensure that doors are clear before they are closed.

Note that the images of views back from the cab will be laterally inverted and those forward from the rear of the Tram will not.

A separate push button conveniently located on the cab desk shall provide the driver with a changeover facility from 'Tram stop' to 'normal mode' for as long as it is held down, to allow a driver to check that nothing is overtaking the Tram at an on-street stop whilst the doors are closing.

Closed circuit television images must remain clear enough to see a cyclist overtaking the Tram before the Tram sets off from an in-street Tram stop, even whilst it is raining, dark, under street lighting and there are car headlamps shining towards the cameras. The tram supplier will be required to demonstrate that the CCTV coverage allows drivers to effectively see all passengers boarding and alighting, as well as being sufficient for the needs of driving the tram on street.

The images from the cameras shall be displayed in the cab to the driver on colour flat-screens with manually adjustable brightness. Images on these screens shall be viewable by the driver under all ambient lighting and weather conditions and at as wide an angle as possible. Care shall be taken to ensure that 'flaring' of the image from brightly lit, wet, road surfaces is avoided. Special consideration shall be given to the use of this equipment in wet weather and poor lighting conditions, when it may be necessary to remove rain droplets or prevent them from forming on the camera lens.

Rain affects closed circuit television both by creating additional reflections from wet road surfaces and by settling on the camera housings themselves. The system must cope adequately with both.

24.16 Interior

Care and attention shall be given to provide a safe passenger environment. Passenger movement within the Tram shall be made as safe as practicable, and able-bodied passengers shall be able to move along the entire length of the passenger saloon of the Tram.

The free and safe movement and loading of passengers shall be facilitated by the incorporation of handrails, grab-poles and an interior free of tripping hazards and sharp corners throughout the Tram. The gangway width between seats shall be not less than 650mm. Hand-holds will be provided to maximise the use of standing space, particularly in vestibules and articulations.

Steps may be included to permit the movement of passenger's to or from areas where there is a difference in the height of the floor of the Tram. Steps shall not exceed 200mm in height and the quantity should be as few as possible. There shall be a minimum of 16 seats accessible to passengers without using steps.

All seats shall be at least 450mm wide, ergonomically designed, resistant to damage and soiling and have easily replaceable covers. The seats shall as far as possible not be placed on pedestals, i.e. shall not require a step up for passengers when taking a seat. Wherever practicable seats should be cantilevered from the vehicle side so as to leave a clear floor area to facilitate cleaning. Seat rows shall be pitched no closer than 752mm.

The non-slip, easy clean floor covering shall also continue up the vehicle sides and seat pedestals so that there are no corners that can act as dirt traps. The floor covering shall be hardwearing with minimal openings and continuous welded or seamless glued joints. The edges of the floor covering shall be sealed to prevent water penetration to the structure of the Tram.

The floor covering shall be highly resistant to staining from any source.

The actual floor area available for standing passengers shall be clearly identified. From this the total standing capacity shall be calculated, respecting Rail Vehicle Accessibility Regulations and the limitations of standing room in areas such as articulations. Seating shall generally be arranged transversely with minimum longitudinal seating.

The tram shall be fitted with luggage racks, distributed evenly about the vehicle and situated as close as practicable to the vestibules. The luggage racks shall occupy a floor space of up to $10m^2$ and extend the full height of the interior and have two intermediate shelves. At floor level a horizontal bar shall extend across the opening into the saloon to prevent objects rolling out of the luggage space. Luggage shall be effectively prevented from excessive movement out of the racks, either under high rates of braking or lateral acceleration. The luggage racks should be easily replaced by seating (or standing areas if appropriate) should **tie** require to do so.

The tram is to be provided with information screens so as to be visible from within most parts of the saloon. The screen should be able to display video information for events and places of public interest, and should also be able to display selected views from the closed-circuit television system. All passenger areas of Trams shall be provided with windows in all sidewalls to maximise visibility for passengers. This requirement shall also apply to draught screens and separation walls to the driver's cabs.

The Tram shall provide data on the number of passengers boarding and disembarking at each Tramstop. This data shall be easily downloaded each day when the tram returns to the Depot. Software to allow analysis of the data shall be provided.

The passenger counting facility shall be incorporated on 6 of the trams in the fleet only. It shall be possible, with minimum disruption to wiring looms, body panels and major equipment, to retro-fit passenger counting equipment should this be required after the vehicles have been delivered.

Passenger stop request buttons shall be provided in the saloon area in accordance with Rail Vehicle Accessibility Regulations.

Interior saloon lighting shall provide glare free, uniformly distributed illumination in passenger areas, to a level of between 280-350 lux. The lighting diffusers shall be easily cleanable.

Emergency internal lights must function after disconnection from the overhead power supply (at all operating temperatures) in accordance with the battery back-up and load-shedding requirements below. Emergency internal lighting shall provide a minimum illumination of 30 lux at floor level and shall be evenly distributed in each passenger area of the Tram. The operation shall be independent from the overhead line power supply. Uniformity of illumination shall not be less than a factor of 0.4 Headroom throughout the seating areas shall be at least 2.1m to ceiling.

There shall be litter bins provided at each vestibule on both sides of the tram, each being able to be filled with typical soft drink cans. The litter bins shall be easily emptied.

All passenger areas of Trams shall be provided with a heating and ventilation system that maintains a constant acceptable ambient temperature during transit between Tram stops and during boarding and alighting at Tram stops when operating in all prevailing climatic and environmental conditions on the proposed route.

The arrangement of heating devices shall prevent excessive draughts caused by high airflow rates, due to the even warm air distribution inside the Tram. With the appropriate arrangement of the

vents, the air inside the Tram shall be heated and distributed over a large area through natural convection. Pockets of hot and cold air shall be avoided.

The interior of each Tram shall be fitted with reserved spaces for on-board advertising and passenger information notices. These spaces shall allow cardboard panels, 210mm deep, to fit snugly into retaining grooves. A clear smooth surface at least 160mm deep shall be available between the grooves to allow for the fixing of vinyls. There shall be a route map above the inside of every passenger doorway. The Infraco shall ensure that the Tram Supplier shall produce and fix all notices required by law or the Safety Management System, and fix free-issue logos, route maps and other notices, using appropriate materials and attachment methods, against a schedule which shall be agreed by **tie** on the mock-up.

Trams shall be fitted with racks close to the vestibule areas for holding information leaflets and newspapers. The arrangement and design of these racks is to be agreed by **tie** on the mock-up.

Two night partitions shall be provided which are fully retractable and can be securely stowed when not in use. These partitions shall be located adjacent to the articulations on either side of the wheelchair area towards the centre of the tram.

This night partition should be included in the mock-up.

The function of these partitions shall be to enable the rearmost portion of the tram to be securely locked out of use by the on-board inspector in order to enable him to more closely supervise the passengers in the forward portion of the tram whilst retaining the wheelchair facilities, as required by RVAR.

The partitions themselves shall be simple to operate by one person in the range of 5th percentile female to 95th percentile male. It shall be possible to lock the partitions in either the stowed or fully deployed position using a key which is carried by the on-board inspector as part of his normal duties. It shall be possible to deploy and stow the partition within 2 minutes. When deployed or stowed the partition shall be robust enough to withstand a person falling against it without sustaining damage.

A key operated control, located such that it may be conveniently operated by the on-board inspector with the partition deployed, from either side of the partition, shall cause the lights in the rearmost (isolated) portion of the tram to be reduced to emergency lighting levels, and disable the external door pushbuttons in order to prevent passengers accessing this portion of the tram. Under all circumstances the crew entry functionality at the single end doors shall remain operable and it shall be possible to operate the emergency door release throughout the tram. Additionally the Passenger

Emergency Communication Units shall remain active in all parts of the tram. The activation of the key operated control shall be indicated in the active driving cab but shall not cause a fault alarm.

In order to assist with the design the following information gives the anticipated normal method of operation.

At a terminus where the partition is to be put in place:

- The passenger doors will be opened in the normal way to allow passengers to exit and enter the tram (at this point they may board at any point in the tram);
- The driver will close and remove the enable command from all doors before closing down the cab and walk to the other cab;
- The on-board inspector will move any passengers in the area to be closed off to the portion of the tram forward of the partition;
- The inspector will then secure the partition in place and operate the key switch to deactivate the rearmost door controls and dim the lights;
- The driver will activate the forward cab and enable the doors for passenger boarding in the normal manner prior to departing.

Consideration should be given to providing an indication on the side passenger information displays to indicate to intending passengers that boarding is at the forward end of the tram only.

Tram loading will be uneven when the partition is deployed. The implications on load compensation in traction and braking control of the tram shall be considered and should continue to function appropriately when this condition is in force.

Interior ceiling and coving panels should be securely retained, so that they do not fall onto the maintainer when the catch is released. All interior panels should be small enough to be handled and lifted by one person unaided.

The interior livery shall be developed as part of the system identity and branding package and is to incorporate the features set out in the Design Guidelines. Typically this shall include the following factors:

- Paint finishes should use the same colours as for the exterior;
- GRP interior panels / door interiors / lower finisher trim for bonded glazing shall be Blue RAL 5005;
- Roof / coves / sides laminates shall be the same colour as Perstorp PP5650U Cezanne;
- Seats and wheelchair backrests shall be covered in Holdsworth Edinburgh Tartan – W218ET (including priority moquette);
- Driver's seat covering shall be Black hide material;
- Floor colours shall be as per Taraflex Luna NT Lewis (Taraflex Red BEF 53/01) and Taraflex Polaris NT Arran (Taraflex Blue BEF 33/01);
- Floor covering weld cord – Yellow;
- Seat backs shall be in Lothian Blue; and
- Hand rails and stanchions shall be in Red RAL 3020.

Passenger seats shall be of a similar style to the Grammar Pratico 2845 Low backrest, as currently deployed on Lothian Buses.

24.17 Bogies

The vehicle will have a minimum of 66% adhesive weight on motored axles.

The bogies shall be of proven design and have been used successfully in another Tram project.
The bogies will incorporate suspension systems to give a high-quality ride characteristic. The suspension system will be self-adjusting or adjustable for wheel wear so that ride heights can be closely maintained.

The ground clearance (from top of rail) fully laden with worn wheels shall not be less than 50mm to any part of the bogie structure except a track guard.

Each axle on the motor bogies will have a spring-applied friction brake. It shall be possible to release the spring-applied brake manually in the event of failure of the actuation system. Under normal operation the parking brake will release and apply automatically when the driver's controller is activated.

Each bogie shall have two electro-magnetic track-brakes, one suspended over each rail between the wheels.

The wheels shall incorporate resilience and damping in order to minimise noise and vibration. Tuned vibration absorbers will be fitted after carrying out tests to determine their most effective parameters.
Effective under-run protection arrangements shall be provided. The end bogies will carry adjustable track guards on their outer ends, to conform to Railway Safety Publication 2 – Guidance on Tramways, issued by the Office of the Rail Regulator requirements for under-run protection. The motor bogies will be interchangeable with each other.

Removal of components such as brake actuators, suspension units, etc. will be facilitated to allow on-site repair and replacement of major items such as motors or wheels to take place with the minimum of Tram down-time.

The ride comfort levels measured according to the ISO 2631 Standard on a ballasted straight and level track in good condition shall be no worse than:

Speed	Wz vertical	Wz lateral
40 km/h	2,32	1,58
70 km/h	2,96	2,36

Table 59 - Ride Comfort in the Driver's Cab

Speed	Wz vertical	Wz lateral
40 km/h	2,24	1,64
70 km/h	2,82	2,28

Table 60 - Ride Comfort in Passenger Compartment

At least two wheelsets of the Tram shall be equipped with flange lubrication equipment on all wheels. Both sides of the flange shall be lubricated. It shall be capable of being programmed to operate on the basis of either location, or of a time interval, or a combination of these.

24.18 Re-Railing

The Trams shall be capable of being returned to the running track in case of derailment with the minimum amount of equipment and in the shortest possible time. The Infraco ensure that the Tram Supplier shall indicate the best methods for re-railing and the equipment required, for all track forms used on the system.

If the Tram design includes suspended body sections, then articulation locks shall be procured by the Infraco from the Tram Supplier.

24.19 Propulsion Equipment

The Tram shall not export additional risk onto Network Rail infrastructure. In particular, the harmonic generation from the propulsion and control equipment shall not interfere with train-borne or trackside systems or other third party systems and infrastructure.

The traction equipment shall detect and automatically manage wheel slip and wheel slide, so as to maintain performance and stopping distances in all track conditions and without damage to the wheel treads. When slip or slide is detected sand will automatically be applied to the rails in front of the leading axle. Sanding must not take place due to spurious wheelslip/slide detected at flange running crossings, pointwork or sharply curved or transitional track. The traction equipment shall tolerate variations in wheel diameter.

The Trams will have the following performance when motoring, on straight and level track and with a nominal line voltage of 750V dc:

Speed (km/h)	Load	Performance	Notes
0 -> 30	Up to AW4	1.2 m/s^2	Instantaneous
0 -> 70	Up to AW4	0.8 m/s^2	Average

Table 61 - Tram Performance Levels

The effect of variation of the line voltage (within the prescribed system limits) on the Tram performance, shall be provided by the Tram Supplier on behalf of the Infraco. The maximum line current, and the conditions when it shall be demanded by the Tram, shall also be provided by the Tram Supplier on behalf of the Infraco.

The Trams shall provide safe operation on all gradients under degraded performance modes as imposed by the traction equipment. In particular, the Trams shall be able to complete any journey on the System with one complete traction drive unit isolated.

The traction and braking control system shall be optimised to provide smooth and low jerk values in starting from rest, acceleration, braking and stopping, on level track and on all gradients that are encountered, under all loading and environmental conditions, while protecting against unintended downhill movement.

The Tram may be fitted with a short-time rated emergency mode, with a higher tractive effort, to assist in recovering other Trams.

24.20 Braking Equipment

The Tram Braking Equipment shall be designed to comply with BS EN 13452 Part 1 except where stated below.

The service brake application shall be capable of retardation at an acceptable rate (as defined in Tables 3 and 4 of BS EN 13452 Part 1) at all specified laden conditions and the jerk rate shall be limited so as to not cause discomfort to standing passengers. The service brake shall normally consist of a regenerative electro-dynamic brake, (that as far as is practicable shall return the braking energy to the overhead line) and a friction brake. The electro-dynamic brake shall normally take precedence over the friction brake.

The regenerated voltage shall not exceed 900V. Should the overhead line become unreceptive, the braking energy shall be dissipated in naturally cooled resistors. Transition between regenerative and rheostatic modes shall be automatic, instantaneous and free from jerk. Braking distances and deceleration rates shall be unaffected by transitions during braking.

The brake resistors shall be protected from overheating. Malfunction of the dynamic brake system must be detected and recorded by the fault monitoring system.

Electro-dynamic and friction brakes shall be blended. In normal operation the friction brake will take over from the electric brake at a low speed. In addition, sand will be applied automatically during braking when triggered by the wheel slip/slide control system. Should the electro-dynamic brake be unavailable on any particular traction drive then the friction brake will be automatically applied to compensate, without jerk or loss of performance.

For emergency braking applications the jerk rate shall be limited without compromising emergency braking performance. The friction braking system should be capable of repeated full service or emergency brake applications.

The Tram parking brake shall be of sufficient performance for a Tram (whether laden or unladen) to hold without movement and for an indefinite period another unladen Tram without brakes on the steepest gradient on the Edinburgh Tram Network under all adhesion conditions.

The braking function and performance of the Tram shall be in accordance with Tables 3 and 4 of BS EN 13452 Part 1. The definitions of the braking modes given in these tables are as defined at Section 3.2 of the Standard.

When the Emergency brake is applied, the track brakes should be released immediately before the Tram comes to rest in order to minimise jerk to passengers.

All braking and jerk rates shall comply with the requirements defined in Standard EN 13452.

24.21 Run Time

The Trams will be capable of being operated continuously for twenty hours in each day.

A runtime simulation will be carried out by the Infraco to demonstrate the required end-to-end journey times. The Trams shall have sufficient performance and ratings to meet the requirements for these run times and end to end journey times. The inputs to the simulation shall be based on theoretical Tram performance validated by type test measurements with similar Trams in service elsewhere. The infrastructure and operational assumptions for the runtime shall include, but not be limited to:

- Alignment information, including speed restrictions due to geometry and sighting restrictions;
- Location of Tram stops and assumed dwell times;

- Speed restrictions due to the presence of pointwork;
- Service brake rates including agreed allowances for driver variation and technique, and varying adhesion conditions;
- Jerk rate and acceleration compliant with the requirements;
- Assumed delays due to operation in mixed traffic, which may be in the form of assumed speeds or time delays;
- Assumed delays due to the operation of the traffic-signal-controlled junctions, which may be in the form of assumed speeds or time delays;
- Tram loading;
- Wheel wear; and
- Traction system supply voltage.

24.22 High-Voltage Equipment

All Tram-borne high voltage equipment shall be adequately rated for operation at the line voltage. All high voltage equipment other than the pantograph will be securely enclosed in rigid, metal and earthed equipment cases.

The high-voltage sub-systems will be protected by high-speed circuit-breakers or fuses, which shall be enclosed so that their operation does not cause alarm or danger to persons standing near to the Tram. The length of electrically unprotected cabling between the pantograph and the protection devices shall be minimised.

Wherever feasible, there will be duplication of primary assemblies in order to minimise the potential for single-point failures. There will be a minimum of two self-contained traction groups, so that failure of a traction drive on one bogie does not immobilise the Tram.

24.23 Auxiliary Power Supply Systems

The auxiliary supply converter(s) shall start when fed from the overhead line, irrespective of the state of charge of the batteries.

The converter outputs for auxiliary supplies and battery charging derived from the overhead supply shall be isolated from the overhead supply to prevent any possibility of excessive voltages appearing on the low-voltage circuits.

The saloon heating units (if mounted in the saloon area) shall be provided with appropriate protection and insulation for the heating elements and their terminal connections.

The charging system for the batteries will be appropriate to the type and size of battery provided.

A suitable socket for connecting a 24V battery charging supply shall be provided.

The batteries shall be of a low maintenance type suitable for traction applications and enclosed in electrolyte-proof containers to contain environmental pollution in case of damage. There shall be absolutely no possibility of spillage from the batteries entering the passenger saloon or the cab. The battery enclosure shall be vented to prevent the build-up of gases.

In the event of loss of the 750V overhead supply, the batteries will allow all essential systems to operate for a minimum of thirty minutes. Certain critical functions will continue to operate for up to one hour from battery supply:

After ten minutes:

- The saloon lighting system shall revert to emergency lighting only.

For up to thirty minutes, the following systems shall remain in operation:

- Brake system;
- Public Address system ;
- Emergency lighting; and
- Door system.

For up to one hour the following systems shall remain operational:

- Pantograph;
- Minimum exterior lighting; and
- Radio communication system.

24.24 Faults and Diagnostic System

The Trams will have a condition and fault monitoring system integral with the vehicle control system, to give indication to the driver of the status of equipment and to allow control of degraded modes. Failures or events requiring maintenance intervention shall be recorded by an on-board system that shall retain all pertinent details after the Tram has been shut down, for downloading and analysis by maintenance staff. This system will have sufficient capacity to store such information at least for the interval between scheduled maintenance examinations, on a first-in, first-out basis. There shall be a visible indication that at least one day's worth of recording remains available.

The downloading of data shall be accomplished using a commonly available lap-top computer or related portable device. Any software or special equipment or licences required to download or analyse the data from the Trams shall be provided by the Tram Supplier.

The display for the driver shall also provide unambiguous information of the status of the Tram, and the severity of any faults present. In particular, the system shall continuously indicate one of the following fault states according to the condition of the Tram:

- Tram OK;
- Minor fault, report to control and continue;
- Major fault, report to control and continue in degraded mode;
- Major fault, Tram must be immediately taken out of service; and
- Major fault, Tram inoperative.

The Tram shall perform a self-check automatically whenever it is started up from a shut-down condition.

24.25 Sanding System

The Tram shall be equipped with a system, which deposits sand immediately ahead of the driven wheels in the direction of travel to rectify any poor adhesion conditions at the wheel/rail interface. The system shall be activated both automatically whenever wheelslip or wheelslide is detected, and manually when under control of the driver. Sand will also be automatically applied whenever the emergency or security brakes are used.

Sand shall be deposited on at least two locations on each rail per direction of travel. The rate of sand deposition shall be no more than that required to correct the poor adhesion. The automatic sanding system shall be inhibited when the Tram is stationary, unless activated manually. The sanding unit response time shall be effectively instantaneous.

The Tram-mounted sand boxes shall have sufficient capacity for a full day's service under all conditions of weather and loading.

The sand filler covers shall have seals to keep the sand content dry under all weather conditions, and when the vehicle is being washed.

A means of ascertaining the sand level in the sandboxes shall be provided, visible from within the Tram.

The Tram sandboxes shall be filled from outside of the Tram using a sand dispensing plant at the Depot. The sandbox arrangement will be compatible with the sand dispensing plant such that it is possible for the driver of the Tram to completely fill all the sandboxes in five minutes. In the event of failure of the plant, it shall also be possible to fill the sandboxes manually, and if any special equipment is required for this, the Infraco shall ensure that the Tram Supplier shall provide it.

24.26 Passenger Doors

The Tram will be equipped with at least four pairs of bi-parting sliding-plug doors, plus two single doors, on each side of the vehicle for the passenger saloon and one internal cab door per cab with a clear opening of not less than 610mm. The doors shall be equipped so that rainwater does not drip onto passengers when the doors are opened.

The passenger saloon doors shall be fitted on both sides of the vehicle in the low-floor area. The doors will be of the following characteristics:

- The double door clearance width shall not be less than: 1300 mm
- The double door clearance height shall not be less than: 2025 mm
- The closing force shall be: <200N
- The opening force shall be: <250N

The doors will be opened and closed by the driver or simply released by the driver so that the passengers will be able to open the doors themselves using door push buttons. The push buttons will be illuminated when they are activated. The doors shall stay open for a fixed time before closing automatically. A warning tone shall be sounded when the doors are released and a different tone shall sound to give warning of door closure.

Devices will be incorporated into the individual door control mechanisms, or in the leading edge of the door, to detect and protect against door obstruction. Slow or defective door mechanisms will be indicated to the driver by the vehicle fault management system. The driver shall be able to isolate any door by using the driver's key to operate an isolation switch local to each door. Such a door shall be secured from all forms of operation other than emergency release.

It shall be possible to open each door manually in case of emergency (including any door that has been isolated). An internal emergency handle will be provided at each door entrance. Operation of the handle shall cause an immediate application of the emergency brake and unlock the door such that it can then be moved open by hand after the vehicle is stationary. The emergency handle will only be able to be reset using the driver's key.

The door edges shall be fitted with weather-proof seals that are soft enough to allow a person's fingers to be withdrawn after the doors have closed. The seals shall be effective against all likely weather conditions and in the Tram washing plant and shall not offer a hand-hold to allow persons to ride on the outside of the Tram.

The Tram shall accept a door enable command from the driver when the Tram speed is below 10km/h, but the doors shall not become enabled until the Tram is at a standstill. If, having been enabled, the Tram speed then rises above 10km/h, the enable command shall automatically be cancelled.

The time from the Tram coming to rest to doors being fully open in response to a prompt passenger demand, plus the time from the driver pressing the door close button to the Tram moving off, shall be less than 12 seconds. This time shall include all necessary delays for RVAR-required tones. The doors themselves shall move from closed to fully open or vice versa in 3.5 seconds or less.

The door guidance mechanism shall not be a swing plug mechanism nor a folding door.

The following controls shall be fitted in each cab for driver control of the doors:

- Separate door-enable controls for the left and right sides. It must be possible to enable both sides simultaneously. The 'enable' buttons of the Tram should each be located on the appropriate side of the cab desk.

- One door 'open' button, which will open any doors previously enabled, but not opened by passengers, provided the Tram is at a stand still.

- One door 'close' button, which will close all doors that are open. This will be the normal mode of door closing at Tram stops other than termini.

- To prevent the doors being enabled on the wrong side, the door enable shall be interlocked and programmed with the correct side for the platform at each Tram stop along the route. This feature shall be capable of being over-ridden by the driver (for example, if the Tram uses an unusual platform at a terminus), but such over-ride shall require the driver to press at least one additional button, which shall not be located adjacent to the other door controls in the cab. It shall be possible to open all the doors when the Tram is in the Depot.

The door enabled indicator lights at the doors shall illuminate and the door enabled tone start, simultaneously with the door actually becoming available.

A door shall re-close automatically, with warning tone, if no obstacle is detected for twenty seconds (configurable). This will be the normal mode of door closing at termini.

When all doors are closed and traction is available, an audible signal, distinct from all other tones and quieter and less offensive than any alarm tone, shall sound in the cab in use. This is preferred to a lamp or other visual signal as the driver already has to view the platform and check ahead before moving off.

Unless a separate external cab door is provided, the door nearest each cab on each side (four doors in total) of the Tram shall be provided with local internal and external 'door open' and 'door close' switches operated by the driver's key. These shall be spring-loaded centre-off, turned one way to open and the other to close. Any door opened using a local switch shall be capable of being closed either using the appropriate local switch or the 'door close' button in any active cab. The purpose of these switches is to allow local control of the door by a driver who needs to leave and re-enter a passenger-carrying Tram, for example to operate points, at a place which is not a Tramstop. In addition, unless a separate cab door is provided, a separate control shall be provided in the cab to allow the Tram driver to open and close the nearside front passenger door separately from the cab. This is to allow the driver to open and close this door separately at the crew change halt at the Depot. An exterior emergency door release shall be incorporated to comply with the requirments of Railway Safety Publication 2,

The door-enabled tone required by Rail Vehicle Accessibility Regulations 1998 (as amended) shall be audible from both inside the Tram and on the platform. This may require an additional external sounder if, in order to be heard outside, the internal one is uncomfortably loud for passengers on the Tram.

24.27 Communication and Monitoring Systems (CCTV)

Spatial provision shall be made in the most appropriate part of the Tram for the operational radio system, driver control units and tram position and detection system equipment, including the associated cabling, support equipment, microphones, speakers, antennae and power supplies. The cabling shall be installed and tested by the Tram Supplier.

These sub-systems will be supplied by the Infraco as free-issue items to the Tram Supplier, and shall be installed and functionally tested during the Tram manufacturing process. The Infraco and Tram Supplier shall work with the suppliers of these sub-systems to define and agree the interface requirements.

The Tram shall be fitted with cab-to-cab intercom facilities. The intercom facility will also provide communication between all four cabs when two Trams are coupled during the recovery of a defective Tram. This facility shall be fully duplex and hands-free.

The Tram shall be fitted with internal cameras that record digital images covering:

- The whole of the saloon, (including the passenger help points) with sufficient clarity to enable individuals to be identified for evidential purposes; and

- The views ahead/back from the cabs.

The resolution of recorded images and recording speed of images shall be of a quality from which it would be capable of being reliably used as part of an accident investigation, and in respect of the saloon images shall be of a quality to enable a conviction in the event of illegal activity. Appropriate labelling in accordance with regulations governing the use of such equipment shall be put in place.
The cameras shall be of a hemispherical type without any detectable direction of the camera view. Additional information, i.e. time, date, camera number and the Tram number will be added to every image recorded.

The recorded Closed Circuit Television images will be capable of being retained on the Tram for not less than 72 hours at which point the system will restart recording and erase the retained image. Minimum frame rate shall be 16fps, per camera. Consideration should be given to providing a push-button in the cab to enable the driver to add an index-point to the recorded images.

Closed Circuit Television images shall be taken from the Tram for subsequent retention and analysis. This shall be done using a removable data storage medium rather than by data transfer. It shall be readily apparent to the Tram driver and to maintenance staff when the storage medium is not present on the Tram. The data storage medium shall be retained by a secure locking device, that is not released by a Tram system key. All data storage devices shall be interchangeable between trams.

All software required for off-Tram viewing, editing and analysis, shall be procured by the Infraco from the Tram Supplier. This shall include any non-standard supporting hardware and any associated licences.

24.28 Event Recorder

The Tram shall include a data recorder capable of providing time, speed and distance information at 1.0m resolution or better for the last day's operations, and at 10.0m resolution or better for the last seven days' operations. Additionally, the start and end of the following events shall be recorded:

- Horn;
- Bell;
- Traction;
- Brake;
- Hazard brake;
- Safety brake;
- Track brake;
- Driver's Safety Device;
- Door enable left present;
- Door enable right present;
- Manual sand command present;
- Tram Ready to Start;

- Hazard lights;
- Left indicator;
- Right Indicator; and
- Passenger Help Point.

Software enabling event recorder download data to be interrogated and displayed in both graphical and tabular format shall be provided. The software shall also enable all of the data to be exported into Microsoft Excel for further analysis.

The data shall be recorded onto a secure, removable data storage medium. The data recorded shall include the Tram number and date. The data shall be retained and be retrievable at least until 48 hours after the Tram has been shut down. The data storage medium shall be retained by a secure locking device,that is not released by a Tram system key. All data storage devices shall be interchangeable between trams.

The Infraco shall ensure that the Tram Supplier shall indicate how the distance base of the recorder shall be recalibrated in normal usage.

24.29 Public Address System

Automatic, audible announcements for destination and stops shall be made by means of a digital voice announcement system. The Tram Supplier shall supply a copy of any necessary equipment and software needed to upload new and amended announcements or to alter the times and places at which announcements are made. The system should allow for a sound quality of RASTI 0.7, or better.

Additionally, the Tram shall be fitted with both internal and external public address systems, selectable individually by the driver, to allow the driver to make direct announcements.

The following are additional to the requirements of the Rail Vehicle Accessibility Regulations 1998 (as amended):

- Rail Vehicle Accessibility Regulations permit audible announcements between stops to be omitted where the run time between stops is less than two minutes. This option is to be used wherever possible.

- Where stops are omitted the system shall automatically allow for this without intervention of the driver.

- At a stop, in addition to the Rail Vehicle Accessibility Regulations requirement of announcing the next stop and destination, the equipment must also be capable of announcing the current stop. The form of the announcement to be provided initially shall be:

  "This is <name of current stop>. This Tram is for <name of destination>. The next stop is <name of next stop>."

It shall be initiated by the door enable, and there shall be a short delay so that the door-enable tone is finished before the announcement starts.

24.30 Passenger Information System

The Tram shall be fitted with six external destination displays, one at each end above the cab and two on each side, one near each end. The side displays should not be obscured by open doors. These displays shall be capable of displaying as a minimum a service number and the ultimate destination of the Tram. The displays should be legible from an oblique viewing angle.

In addition to the text indicating the destination of a tram on both the side and cab exterior displays an area immediately preceding the text shall be reserved for a single symbol. This symbol shall be displayed in an array of LEDs of the same size and resolution as that of a text character. The symbol shall be in a single colour which is the same as that of the text display. It shall be possible to display a variety of characters including simple geometric shapes and representative symbols (e.g. an aeroplane to indicate AIRPORT as the destination). It shall be possible to select an appropriate symbol during the programming of the system which will then appear on the display when the driver selects his route.

The purpose of this feature is to assist passengers with reading difficulties to ensure that they board a tram on the correct route for their requirements.

Internal saloon displays shall be used to show information concerning the next stop and additionally a "Tram Stopping" sign. They shall also display the local time, and should also be able to display public service information. The number and location of these displays shall be such that the information shall be easily visible to passengers within any part of the Tram.

The internal visual displays shall display, successively:

- Screen 1: Tram to
- Screen 2: <Destination>
- Screen 3: Next Stop
- Screen 4: <Next Stop>

Stepping to the next stop name shall take place on arrival at a stop once the doors are enabled. Where stops are omitted, the displays shall take account of this automatically without the intervention of the driver.

The size of the Passenger Information Display font shall conform to the requirements of the Rail Vehicle Access Regulations 1998 (as amende). The brightness of the displays shall compensate for ambient light quality.

After leaving the stop before a terminus, the external destination indicators shall change to show the destination of the next trip, so that the Tram arrives at the terminus with the correct next destination already displayed.

24.31 Passenger and Inspector Alarm System

Passenger alarm devices shall be located in the saloon area, at every door area and at the disabled passengers area. These devices shall allow communication with the driver and the location of the active device shall be indicated on the driver's display. The communication system shall be fully duplex.

Request 'Stop' buttons shall be provided and shall be compliant with Rail Vehicle Accessibility Regulations 1998 (as amended) and shall:

- Become operable when doors are proved closed at a Tramstop;
- When the first one is pressed, sound a single audible warning in the cab, illuminate a warning light in the cab and illuminate the Tram stopping indicators (required by the Rail Vehicle Accessibility Regulations) 1998 (as amended) in the saloon;
- No further audible warning in the cab from subsequent button pushes; and

- Be positioned such that they can be easily activated by any passenger intending to disembark, but should not be positioned such that they can be inadvertently activated by standing passengers.

Request stop from the wheelchair spaces shall:

- Illuminate a different warning light in the cab.
- Create a door open request for the nearest door, so it opens as soon as enabled.
- Override the automatic close on that door for the next opening.

All request stop indications shall be cancelled by the next door enable command.

Devices shall be provided that enable the on-board inspector, working within the saloon or on an adjacent platform, to alert the tram driver to an incident.

The handheld, pocket sized device to be carried by the on-board inspector shall have 2 modes of operation. Mode 1 will provide an alarm to the driver to indicate that the inspector is experiencing difficulties or feels under threat. Mode 2 will alert the driver to an immediate emergency e.g. the inspector is under physical attack.

When the inspector initiates a Mode 1 alarm the handheld device will operate silently. If a Mode 2 alarm is initiated a loud 'panic alarm' sound will be emitted from the handheld device in order to deter the attacker.

The inspector's device shall be stored in a charger/holder in the Depot Duty Room for Drivers and Inspectors and picked up by the inspector as he begins his duty on the tram. The Inspector's device shall be equipped with a mounting device and sized such that it can be conveniently and comfortably be carried on the ticket issuing machine shoulder strap. Each cab of the tram shall be equipped with a receiver capable of responding to all alarm Modes transmitted within range.
It shall be possible to replace either the handset or the receiver with a spare in the event of failure or loss.

The handheld device and related system shall operate satisfactorily in the electromagnetic environment which will be encountered on the Edinburgh Tram Network.

24.32 Hauling or Propelling a Defective Tram

An emergency coupler will be provided at each end of each Tram. It will be used only for hauling or propelling a defective Tram. The couplers will normally be concealed behind a removable cover. Coupling must be possible at all locations on the Edinburgh Tram Network.

An empty Tram shall be capable of both hauling and propelling (but not both simultaneously) another empty Tram, which is incapable of movement under its own power, between any two points.

As well as mechanical coupling, the following control facilities shall be provided on a coupled pair of Trams:

- Track brake control of both Trams from the cab in use, assuming that each Tram's batteries have sufficient charge;
- Through intercom between all cabs; and
- Through control and power to hazard lights, brake lights and marker lights.
- The intercom, marker lights, brake lights and hazard lights shall be operational on both Trams even if the Tram being assisted has no battery power available.
- The Tram will have a true reverse direction capability from a leading cab, to allow the uncoupling of one Tram from another. This will be enabled with the use of a sealed switch.

24.33 Exterior Details and Livery

The exterior livery shall be as set out in Section 5 of these Employer's Requirements.

The paint shall typically be water based and should allow for the application and removal of advertising vinyl coverings without damage.

The Infraco shall ensure that the repair methods for the Tram shall be defined by the Tram Supplier and shall not import undue risk with regard to the processes and materials used.

The external lighting shall comply with Her Majesty's Railway Inspectorate Railway Safety Publication, Part 2, The Road Vehicles Lighting Regulations, 1989 and the amendment 1994.

The external lighting shall consist of Light Emitting Diode (LED) arrays wherever practicable, and shall be composed of:

Facing forward

- Two white dip-able symmetric headlights;
- Two white front position lights (integrated in the headlight cluster)(side lights);
- One fixed white centre headlight located centrally above the windscreen;
- Two amber direction indicators; and
- Two end outline marker light (white, at high level).

Facing rearward

- Two red rear position lights (tail lights);
- Two red brake lights;
- Two high intensity rear fog lights (red);
- Two amber direction indicators; and
- Two end outline marker lights (red) (at high level).

Side Markers. Four, or more, amber LED combination lights down both sides working as:

- Side marker lights;
- Direction indicators; and
- Side reflectors.

The Tram exterior shall be designed so as to prevent surfing by any individual.

The Tram exterior finish shall allow for easy repair to accidental damage and severe attacks of graffiti. The finish shall allow for the easy application and removal, if required in the future, of special finishes for advertising, such as self-adhesive vinyl.

24.34 Roof-Mounted Equipment

Much of the electrical traction and auxiliary equipment will be housed in equipment cases located on the roof of the Tram. The equipment cases will be robust, weatherproof and suitable for storage and operation in an exposed position. All enclosures will minimise the risk of condensation, and provide adequate and effective ventilation for cooling where required. The normal working of the roof-mounted equipment shall not be adversely affected by dust, wind, rain, snow or ice.

Access to the equipment within the equipment cases will be quick and straight-forward for suitably qualified and trained staff, working from high-level platforms. Standing areas shall have non-slip surfaces. Due regard will be given to the safety requirements considering the location at height and the working voltage. Specific measures will be required to mitigate the risk from charged capacitors and batteries, and equipment likely to be at high temperature. All metal enclosures shall be suitably earthed to the vehicle structure.

All the roof-mounted assemblies shall be easily removable with the minimum amount of disruption to the Tram, to allow repair by replacement. The use of plugs and sockets to allow quick connection and disconnection of assemblies is preferred. Cabling and piping shall be protected from accidental damage.

As far as is practicable, the equipment will be equally divided between the two end sections of the Tram to equalise weight distribution.

The location of the pantograph will be determined by the layout of the Tram and shall be mounted above a bogie and as near to the centre of the Tram as possible.

24.35 Pantograph

Infraco shall ensure that the pantograph for the tram fleet shall be supplied by Tramco.

The governing specifications for the pantograph shall be BS EN 50206-2, BS EN 50119 and Railway Safety Publication 2 - Guidance on Tramways, issued by the Office of the Rail Regulator.

The wire height requirements shall be confirmed, including the operational wire heights within the depot buildings, over-bridges and high load route areas.

A single roof mounted pantograph shall be provided compatible with the Edinburgh Tram Network OLE.

Failure of any porcelain insulators on the lightning protection or other equipment shall not allow flexible cables to fall onto the vehicle roof.

The pantograph mechanism shall raise and lower using an electric drive system. In the event of failure or emergency situation, it shall be possible to lower the pantograph using a hand-crank operated from inside the Tram.

In developing the OLE design, the following pantograph / OLE characteristics have been assumed.

- Maximum wire height 6.8 m
- Minimum wire height 4.3 m
- Profile to be developed
- Overall Collector Head width 1850mm assumed
- Carbon length 1000mm minimum
- Collector Head Depth 250mm
- Along track length to be developed
- Head mass (to be as low as reasonably achievable)
  - (a) Carbon 13.0 kg assumed
  - (b) Metallised Carbon 15.0 kg assumed
- Articulation (frame) dynamic mass 12.0 / 16.0 kg
- Head suspension 12000 N / m
- Frame damping raising 60 / 100 N sec / m
- Frame damping lowering 60 / 100 N sec / m
- Head suspension damping 8 / 12 N sec / m
- Quasi-static contact force 90 N / 180 N
- Friction frame hinge 8 N / 10 N

25 Tramstops

This Section of the Employer's Requirements defines the Tramstop requirements applicable to the Edinburgh Tram Network which the Infraco must comply with.

25.1 General

The Edinburgh Tram Network shall have Tramstops provided at the locations shown in Figure 1 – Edinburgh Tram Phases 1a and 1b Network Diagram of these Employer's Requirements.

All elements of the Edinburgh Tram Network infrastructure shall be designed, manufactured and installed to provide a layout and a suite of furnishings reflecting a fully integrated system and shall be of an economical design and construction that shall reflect economy of use, maintenance, overhaul and renewal.

Provision shall be made, in the form of space, agreed fixing details, local cable routes for data, power and lighting (where appropriate) for a local termination point (Tramstop equipment cabinet), to be provided at all Tramstops.

The Tramstop design aesthetic shall extend to the design of the associated street furniture cabinets, trackside isolator cabinets, point control, point heater cubicles, road junction control cabinets, detector loop cabinets, etc. which shall be visually compatible with the Tramstop furniture. Particular note shall be paid to the requirements laid down in the Tram Design Manual to ensure compliance.

The emphasis on this co-ordination shall ensure an integrated design approach within the urban environment.

25.2 Tramstop Definition

Tramstops shall provide passengers waiting for, entering or leaving the tram system with safe, comfortable, environmentally friendly, informative, high quality access and egress facilities.

Tramstops shall be of the following three types:

- Island platform stops;
- Side platform stops; and
- Combined side and island platform stops.

Platforms shall be long enough to cater for nominal tram vehicles with the extreme distance between the outer edges of the end passenger doors of the vehicle of up to 38.13 m.

Side platform stops shall provide passengers with an effective circulation area and shall be a minimum of 3.0 metres wide. Island platform stops shall be a minimum of 4.0 metres wide unless otherwise agreed with **tie**. A stopping tolerance of plus/minus 2.0m shall be allowed for in the platform length.

All platforms shall contain a minimum clear unobstructed envelope.

The platform height shall match the requirements of the tram to ensure level access in accordance with RVAR (Rail Vehicle Accessibility Regulations).

The layout of architectural elements on the platform shall be arranged to provide the user with ease of access and passage on / off the trams.

Access routes serving the platform shall be appropriate for the level of pedestrian activity and be, where practical, a direct route from key passenger generators.

Key views and vistas of the City of Edinburgh shall not be unnecessarily interrupted.

Platforms shall provide passengers with a clear view of approaching trams.

Tramstops shall maintain consistency of alignment with the track.

A Tramstop shall be defined as:

- That area bounded by the rear of any platform structure and the track crossing points at either end; (or for central stops the external track edge between the track crossing points at either end);
- Including any underground service ductwork and cabinet specifically associated with the stop, outside this zone in the immediate vicinity;
- Including all dedicated access routes to the nearest public road or key passenger generator; and
- Including all structures, systems (including cabinet), finishes etc required to deliver the functionality of the Tramstop.

25.3 Tramstop Requirements

25.3.1 General

Tramstop architecture shall reflect a coordinated design consistent with the overall design aspirations as outlined in the Tram Design Manual and in the CEC Code of Practice for Access and Mobility and shall be subject to the approval of **tie**.

All components used in the construction of the Tramstop shall comply fully with relevant British and European Standards.

Tramstops shall be compliant with amongst others:

- The requirements of the Tram Design Manual;
- Railway Safety Publication 2 – Guidance on Tramways, issued by the Office of the Rail Regulator;
- Disability Discrimination Act requirements;
- The outcome of consultation with the Mobility and Access Committee for Scotland (MACS);
- The Department for Transport Inclusive Mobility Guide to Best Practice on Access on Pedestrian and Transport Infrastructure; and
- The Building Regulations (Part M).

Reference should also be made to:

- Mobility-impaired access and egress to and from each platform, the minimum width of ramps provided on the Edinburgh Tram Network System shall be 2.0m between handrails;
- Ramps, if required, shall have a maximum gradient of 1 in 20;
- No ramp shall be longer than 10m without the incorporation of a landing;
- Landings shall be no shorter than the width of the ramp; and

- Mobility impaired tram access/egress points shall be clearly defined within the platform finish if required by the tram design and consistent with tram stopping tolerances.

Tramstops shall be of a design that ensures the mobility impaired are able to use them and all parts thereof without hindrance or confusion. All walking routes approaching or within the Tramstop area shall be clear of any form of obstruction.

Provision shall be made for those who require to use canes e.g. inclusion of tapping rails. Guardrails shall be provided with handrails.

Where appropriate, Tramstops shall be provided with handrails, balustrades, and general platform furniture, other than seating, of a design that inhibits their use as seating or as a climbing medium.

Tactile surfacing shall be provided as appropriate e.g. at platform edges, stairs or ramps (if applicable), and at dropped kerbs.

25.3.2 Platform Surface

The general platform surface shall be in accordance with the Tram Design Manual and will vary dependant upon location, but in all instances provision shall be made for tactile strips (400mm wide) to assist the visually impaired along the platform edge. The platform edge shall have a suitable 65mm wide delineation of the white or alternative inset line to the leading edge of the line-side coping, or other equivalent visual feature.

Disabled boarding points shall be indicated, if required, by use of tactile material indicating the position of the relevant tram doors.

Platform surfaces shall have a nominal cross fall away from the platform edge of 1:40 to a slot drainage system. Platform drainage will be dependant upon local topographical criteria.

The platform top surfaces shall be slip resistant and durable. Transition zones shall be provided, free of trip hazards, which can be clearly differentiated by those who are visually impaired.

25.3.3 Tramstop Furniture and Equipment

All Tramstop furniture and equipment on the platforms shall be constructed of materials and finishes that are resistant to scratching and ensure the easy removal of graffiti.

Emphasis shall be given to the reduction of 'clutter' and where possible elements shall be combined to provide a dual functionality.

The Tramstop furniture and equipment shall be designed to allow easy replacement of damaged components without affecting equipment, lighting and seating.

Tramstop furniture and equipment shall be designed to support the passenger service without maintenance intervention that results in any form of disruption to the service during service hours.
The equipment provided at each location shall be appropriate to that location to limit any unnecessary clutter at Tramstops.

Tramstop furniture and equipment shall be of a modular design based around simple geometric shapes and of modular construction to enable their rapid replacement.

Components and materials shall be of a quality suitable for use in a densely populated and marine environment.

The design of the Tramstop furniture and equipment shall ensure that minor inspection, repairs and maintenance, including lamp replacement, can be carried out during the operational day with the minimum of disruption to passengers, and without disruption to passenger services.

25.4 Description of Tramstop and Street Furniture

25.4.1 General

Each Tramstop shall include the following components:

- Passenger Shelter / Canopied Waiting Area;
- Passenger Help Point;
- Passenger Emergency Call Point;
- Closed Circuit Television Cameras;
- Real Time Passenger Information Display Bus Tracker Reporting (where identified);
- Braille assistance;

- Public Address;
- Information Panel;
- System Logo and Stop Name;
- A perch rail/seat; and
- Advertising panel (6 sheet) - if permitted by Planning Authority;
- Ticket Vending Machines;
- Lighting;
- Litter bins.

Equipment placed on platforms shall not prohibit passengers from having a clear view of an arriving tram.

25.4.2 Shelters and Canopied Waiting Areas

Each platform shall contain facilities to provide passengers with weather protection (e.g., wind, snow and rain) in the form of a canopy or shelter designed and constructed to provide maximum visual transparency with minimum visual impact, consistent with offering the required protection.

Tramstop shelters shall be of a modular design based around simple geometric shapes, providing the necessary requirements for passenger use and comfort. A clear uninhibited view of arriving trams shall be available to passengers from within the shelter area.

Tramstop shelters shall permit future easy alteration to the capacity in terms of volume of passengers and equipment to meet emerging needs.

Lighting within the shelter shall provide a minimum of 50 Lux evenly distributed (controlled by sensor).

All shelters shall be provided with adequate drainage facilities to ensure all rainwater is carried away into the Tramstop drainage system.

Side infill panels together with back panels shall be of toughened transparent glass to provide a light visual appearance and with the Roof panel of complementary quality to provide passengers with protection from the weather. The design shall be such that it provides a safe environment for passengers in the event that glass panels are missing from the shelter as a result of breakage. The design of the shelter shall also take account of access requirements for maintenance and repair purposes.

Side panels shall provide sufficient depth to give weather protection but not obstruct the safe use of the Passenger Emergency Call and Help Points and shall meet the requirements of the visually impaired.

Shelter roofs shall be profiled to prevent build up of litter / debris on the top surface. The shelter structure, roof and wall panels shall, as far as is possible, be made from proprietary components in order to facilitate ease of replacement and repair.

25.4.3 Tramstop Lighting Columns

Platforms shall be provided with a minimum illumination level of 30 Lux.

Lighting shall be low energy, avoid glare to tram drivers and road users, have good colour rendition and be provided throughout the whole of the area occupied by the Tramstop.

The Tramstop lighting shall differ from the adjacent urban and or city lighting and shall emphasise the presence of the Tramstop to enable passengers to identify the Tramstop from a distance. Consideration should be given to the requirement to make use of local ambient lighting (which may need to be enhanced) to avoid additional clutter at the Tramstop.

Access routes to the stops shall, wherever practical, use existing street lighting as the sole or primary means of illumination. Where this is not possible then lighting of a similar level to the local road lighting shall be provided.

All platform shelter / canopy lighting shall enhance security in the waiting area.

Tramstop lighting shall not conflict with the requirements for Closed Circuit Television coverage and shall permit the attachment of other stop furniture or equipments as required.

Hinged columns, hinging parallel to the track, shall be provided for ease of maintenance.

Tramstop emergency lighting facilities shall be provided in all shelters where the adjacent road lighting would be inadequate in the event of a Tramstop power supply failure.

25.4.4 Tramstop Name Signs

Each Tramstop shall include an illuminated pole mounted Logo, or more than one if there are more than one access points from a public road, or a sign incorporating the Edinburgh Tram Network corporate identity visible from a distance of 50m.

Each Tramstop shall be provided with Tramstop name signage as part of the general furniture arrangement on each platform.

Tramstop name signs shall be legible to tram-borne passengers as early as possible on their approach to the platform.

An appropriate number of stand-alone Tramstop name signs shall be provided along the length of each platform. The construction and materials shall form part of the "family" of components forming the Tramstop furniture.

The Tramstop name sign support structures shall be incorporated within the line of any guardrails, should these be provided, and into the advertising / information display.

The Tramstop name signs and Logo shall be illuminated and shall be displayed on the tram arrival side of the shelter as well as along the platform.

25.4.5 Advertising / Information Signs and Displays

A Real Time Passenger Information Display (double sided) shall be provided at each platform.

This shall take the form of a dynamic multi line visual display which is legible in all weather conditions to passengers having normal vision and standing at a distance of 10.0m away.

The Real Time Passenger Information Display shall comply with the requirements described in the Employer's Requirements.

Passenger information regarding the tram service and safety notices shall be provided at all Tramstops in both writing and Braille.

All passenger-operated equipment shall be provided with clear unambiguous operating instructions in both writing and Braille.

A suitably enclosed weatherproof map (part of the Tramstop furniture) of the local area, bearing the words 'You are Here', shall be located in each platform shelter.

A suitably enclosed weatherproof information display or displays (indicating the locations of adjacent bus stops and bus related information, hospitals, local amenities and places of interest) shall also be located at each platform access/egress position.

At appropriate key interchange locations (refer to 35.4.1 - Overview to the Passenger Information Display System), provision shall be made within the Tramstop layout to provide a bus tracker information panel, which shall be provided and installed by others.

25.4.6 Litter Bins

Litter bins, where provided, shall be stainless steel (Minimum Grade 304 to BS 5135) to facilitate easy cleaning and shall have a lockable removable bin liner.

The location of bins shall not obstruct the main passenger circulation routes and shall ensure convenience of use.

A minimum of two litter bins per platform shall be provided each positioned mid-point between the shelter and the end of the platforms.

Lockable access covers shall be provided and the bins shall be designed to limit entry and retention of liquids.

The bin size shall be determined on the basis of a single collection per day.

25.4.7 Public Address

Speakers shall be provided at each lighting pole location and within the shelter to enable passengers to receive messages without volume settings being high and causing nuisance outside the area of the platform.

Induction loops shall be provided within the central area around the shelter position.

Further details of the public address system are contained in Section 35.13.2 – Workstation Capabilities.

25.4.8 Tramstop CCTV

Closed Circuit Television (pan, tilt and zoom) digital colour cameras shall be provided on each platform to enable colour pictures to be displayed at the Control Centre and other Closed Circuit Television monitoring authorities.

The canopies / shelters, stop lighting and publicity / information displays shall not inhibit the Closed Circuit Television coverage of the Tramstop or platform.

The total number of cameras on each Tramstop shall be dictated by the physical restraints associated with each individual Tramstop, however, a minimum of one per platform shall be provided.

25.4.9 Passenger Help Points and Passenger Emergency Help Points

Tramstops will be provided with one combined Passenger Help Point and one Passenger Emergency Help Point on each platform, providing two-way (duplex) audio communication between a person located on the platform and the operator located at the Control Centre.

The Passenger Help Points / Passenger Emergency Help Points detailed arrangements shall be in accordance with Section 35.13.2 – Workstation Capabilities.

25.4.10 Guardrails, Handrails and Cycle Racks

Platform guardrails shall be provided to the rear of any platform where there is a potentially dangerous interface with passing road vehicles, Network Rail or a significant change in level.

Splashguards shall be provided in vulnerable locations.

Where provided, guardrails shall be set at 1150mm above platform level and comply with the requirements for the mobility impaired.

Cycle parking frames will be provided at each Tramstop, where this is appropriate. These will be positioned within view of the Closed Circuit Television surveillance system.

25.4.11 Seating

Bench seats (with integral arm rests and perforated seating structure) shall be positioned on each platform and within each shelter a perch rail / seat shall be provided, designed to prevent the retention of liquids. In all instances the under seat space shall be open to meet security requirements.

25.4.12 Ticket Vending Machines (TVMs)

Ticket vending machines shall be located within or adjacent to the shelters. The TVMs shall be positioned in an appropriately shaded location to assist users in reading the machine's visual display. Ticket vending machines will be supplied to the Infraco, as free issue, by TEL.

Infraco shall make provision for the power and communication cable routes, cables and draw wires from the Tramstop equipment cabinet to the proposed ticket vending machine locations.

Sufficient spare ways within the power and equipment cabinet to accommodate ticket vending machines and a local ticket vending machine network connection will be provided. Further details regarding ticket vending machines can be obtained in 36.5 of these Employer's Requirements.

25.5 Electrical (LV) and Communication Facilities

All Tramstop electrical (LV) and communication equipment shall be accommodated within a Tramstop equipment cabinet. LV supplies shall be provided to the equipment cabinet from which local electrical supplies to Tramstop equipment will be fed.

A 230V, 13A or equivalent socket shall be provided within the Tramstop equipment cabinet.

A 110V supply shall be provided at a suitable location on each platform for cleaning purposes.

All power requirements for the Tramstop infrastructure and adjacent infrastructure equipment will be sourced from the local Distribution Network Organisation supply. All power supplies shall be adequately rated to support the requirements of the Tramstop equipment.

25.6 Layover Facilities

Layover facilities shall be provided in accordance with Section 2.15.

26 Track

This Section of the Employer's Requirements defines the Track requirements applicable to the Edinburgh Tram Network which the Infraco must comply with.

26.1 Track Layout

The Infraco shall ensure that the track layout shall be in accordance with ETN Diagram at Figures 2 & 3 – Edinburgh Tram Phases 1a and 1b Network Diagram

26.2 Components

Trackwork components to be provided shall include, but are not limited to, the following:

- Rails (relate to Wheel / Rail interface: N.B. inc. hardness related to welding repair);
- Sleepers and points and crossing bearers;
- Turnouts;
- Points and points motors;
- Points baseplates and slippers;
- Points rollers;
- Crossings;
- Check rails and check rail fastening systems;
- Guard rails and guard rail fastening systems;
- Transition rails;
- Rail joints (fishplated and welded);
- Insulated rail joints;
- Isolatable rail joints and provisions for access to associated rail/cable connections;

- Rail movement joints;
- Rail fastening systems;
- Rail pads;
- Baseplates;
- Resilient baseplate systems;
- Rail embedment for street running track;
- Paved trackbed and concrete trackbed systems;
- Grooved rail drainage systems (including boxes);
- Buffer stops and vehicle arrestor systems;
- Ballast;
- Granular filtering;
- Granular blanketing;
- Geotextile membranes;
- Plastics membranes;
- Geosynthetic reinforcement;
- Provision and installation of signs and markers; and
- Grasstrack.

26.3 General Requirements

Tracks shall be designed and constructed for left-hand running under line of sight operation.

The maximum design speed shall be 80 km/h.

Where the Edinburgh Tram Network runs within an urban environment on non-segregated sections of tramway, the speed limit shall be the same as that for motor vehicle traffic.

The trackforms shall be applied as indicated at the documents System wide trackform Surface Finishes Version 3 ULE90130-SW-DRG-00069.PDF, ULE90130-SW-DRG-00070.PDF and ULE90130-SW-DRG-00071.PDF

The track shall facilitate ease of construction and minimise disruption to other road users and the public during the construction phase on all roads and across all junctions between Haymarket and Ocean Terminal via Princes Street.

The track shall minimise the potential for stray current and be in accordance with the requirements and codes of practice for stray current and the **tie** Earthing and Bonding Policy document. As the valid standard the EN 50122 shall be in force.

Ensure simplicity of overall maintenance and ease of rail replacement and relaying, minimising the disruption to other road users.

The track shall comply with the operational noise and vibration requirements as stated in the **tie** Noise and Vibration Policy. Detailed technical solutions will be determined during the Detailed Design Phase for areas identified as sensitive to Noise and Vibration. The assessment of these solutions shall be in line with the characteristics of the vehicles, the existing sub-structure and the structures adjacent to the track-bed.

The track shall integrate fully with roads, such that differences in roads surfaces, specifically finished levels and skid resistance, are minimised as far as is reasonably practicable.

The track shall integrate fully with surrounding area functionality and appearance, to ensure that hazards to pedestrians, the mobility impaired and cycle users are minimised as far as is reasonably practicable, and such that track surface finishes are in accordance with all design requirements, guidance and aspirations.

Adequate track formation shall be provided to facilitate the secure foundation for track installation.

The in-street track formation shall be of shallow design such that it permits minimum amount of public utility diversions and aids the high speed construction of the tramway.

The surface at pedestrian crossing points shall be level with the top of the running rails and surfaced in non-slip materials. These materials shall be chosen to be reasonably consistent with the character of the locality whilst providing clear indication to all users (including the visually impaired) of the correct point to cross the track and the extent of the Edinburgh Tram Network environment.

Track shall be a standard tramway track with steel rails set to Standard Gauge (1.435m) and shall be compatible with the Edinburgh Tram Network trams.

On ballasted sections of the route, road/rail equipment will be used for maintenance tasks such as tamping. These machines shall be equipped with suitably profiled wheels.

26.4 DKE, Structure Gauge and Clearances

The DKE adopted shall be the "Assumed Tram for Design", as presently defined in the SDS design documents.

Structure gauge and clearance drawings shall include the standards for staff maintenance walkways and tram evacuation walkways.

Adequate walkways are required throughout the route off-street. Appropriate signing shall be included to indicate the walkway.

26.5 Trackforms

Various trackforms, as presently shown in the SDS design documents, are required to suit the different domains in which the track lies along the route and in the Depot and sidings. The different trackforms provided shall comprise, but not necessarily be limited to:

- Flush-finished track in road areas and at Tramstops, including mixed operation with traffic of various kinds, or not; and with a variety of surface finishes;
- Track with grass flush finish;
- Track with plain concrete flush finish (e.g. in the depot and for certain structures, e.g. the A8 Underpass);
- Direct fixation track on structures;
- Ballasted track; and

- Special trackforms in the depot or at Tramstops.

The trackforms shall be designed and installed to take full account of the requirements for future maintenance of components, e.g. life-extension of rails by welding in situ, and the adjustment of the levels of rails and the adjacent surfaces, and of sectional renewal.

26.6 Specific Technical Requirements

Retention of alignment on small radius curves in the case of ballasted track where rails are continuously welded shall be considered. A minimum radius shall be established for the application of ballasted track, with an appropriate alternative trackform applied elsewhere.

For in-street track construction, and in the absence of sleepers or similar, a means of retaining the lateral and rotational position, such as tie-bars of the rail together with the track gauge shall be provided.

A standard trackform shall be provided which shall comprise a slab that shall be suitable for any of the road, pavior / block / sett and grass surface finishes. In effect the surface finishes shall be interchangeable without having necessarily to redesign or reconstruct the whole slab.

A special track form shall be used at sensitive locations to mitigate against ground borne noise and vibration. These locations will be identified by the Infraco in agreement with **tie**.

At the end of all terminating tracks, provision shall be made for a device for arresting Trams. These devices may include sliding friction or fixed type buffer stops, sand drags, architectural features such as planters, wheels stops or other means. The choice of such device(s) shall be made through risk analysis of the location, taking into account the risk to passengers, pedestrians and staff and to the vehicles and surrounding environment.

Rail shall be continuously welded wherever possible. The use of fish-plated joints shall be avoided although fishplated track may be proposed in the Depot to avoid the requirement for rail movement joints at turnouts.

26.7 The Wheel / Rail Interface

A report has been produced by SDS (ref: ULE 90130-SW-REP-00130 v3) which shall form the basis of development of this critical interface. The key factors will be recorded here.

26.8 Drainage

Drainage from trackwork shall be interfaced with the road and civils drainage systems. Adequate drainage within the trackwork system shall be provided such that the integrity of the installations is secure.

The Edinburgh Tram Network shall have a drainage system that, as a minimum, achieves accepted EU or BS standards and Good Industry Practice.

The drainage of all new bridge structures shall be positive and, unless otherwise required by the relevant local authority, all surface water shall be piped to the local storm water sewer systems by a defined drainage path.

Particular attention shall be paid to ensure that surface water drainage systems in the vicinity of traction substations and cable ducts are routed to avoid any risk of flooding of electrical equipment areas, point machine chambers, and the ducts themselves.

For on-street track, the track drainage system shall incorporate an insulated break from the storm water system.

Drainage proposals including any new flows into existing drains and the method of connection shall be approved by Scottish Water, SEPA and the City of Edinburgh Council Roads Department as appropriate.

26.9 Technical Requirements for Points and Crossings

All turnouts, crossings and interruptions to the continuity of the rail head shall be equipped with flange running sections or other design which minimises joint noise.

The design shall minimise flange squeal through tight radii and through junctions.

Points shall be provided with two movable blades so mounted to allow the use of magnetic track brakes and their safe passage through the point and crossing.

All points shall be freely trailable without damage to the blades or mechanism.

Points and crossings shall be designed so that they are capable of through stressing as required.

All points on the main line, likely at some time or another to be taken in the facing direction (including trailing, emergency crossovers), shall be equipped with detection and indication. Indication of trailing points likely to be taken at high speed shall be considered.

All points, when operated by hand lever, shall be capable of being thrown fully, by one throw of the lever, by a male or female person of slight build, without undue effort or strain. To this end, the maximum required effort to change the points shall not normally exceed 230Nm.

Some form of indication shall be incorporated into the mechanism to indicate that the point has thrown fully. Lever mechanisms requiring repeated operation to throw the points are not acceptable.

Efforts should be made to reduce friction and the effort to throw the points. Flange relief of the point tongues is one such feature.

Point tongue profiles and movement on all points shall conform to the same dimensions and tolerances.

Design tolerances shall be maintained in service with a relatively low level of attention.

Designs with potential for high wear rates or other high maintenance features are not acceptable.

Designs with the potential for lengthy infrastructure replacement periods are not acceptable, particularly in on-street areas.

Adequate, functional drainage must be provided to ensure that rail grooves and point machine pits are kept clear of rainwater, sand and rubbish from the street etc.

Pointwork in the depot site area shall be installed in a flush-finished trackform for 9 turnouts and 1 crossing at the beginning of the depot area. This flush-finished trackform will be designed for re-railing purposes only.

26.10 Technical Requirements for Point Operation

26.10.1 Point Machines and Mechanisms in General

All point machines, whether powered or not, shall be from the same family of machines and provided by the same supplier.

Point machines shall allow the points to be 'freely' trailable without damage to the blades or mechanism.

In street running track, point machines shall be installed between the rails of the track.

On ballasted track, in order to facilitate maintenance, they shall be installed to the side of the track, on the outside of a typical two track layout.

Point machines shall be capable of manual operation in a single throw by tram drivers using a removable point bar to be carried in the Tram drivers cab. Only one form of point bar shall be utilised on the system.

It shall be possible for the points to be changed by a male or female person of slight build, without undue effort or strain when the points are not affected by snow or ice. To this end, the maximum required effort to change the points shall not normally exceed 230Nm.

When operated by hand using the standard points operating bar, it shall not be possible to inadvertently partially throw the points, which shall always throw sufficiently to make the respective detection circuits at each lie of the points with a single movement of the lever.

A total number of 70 point operating bars shall be supplied.

All combinations of points and point machines shall be validated to demonstrate that:

- The machines shall exert sufficient force under all foreseeable circumstances to move the points blade into the required position;
- The points shall close and lock reliably under all foreseeable operating conditions;
- Detection settings shall have adequate maintenance tolerances to ensure that points detection setting testing shall be required no more than monthly on all points;
- The wheel/rail interface at the toes of the points shall be such that there is no derailment risk under all combinations of wheel wear, rail wear, and detection settings;
- Any tram driver shall be able to operate all points safely and without risk of injury; and

The enclosing case of the Point Machine shall be to Class IP 67 and be drained.

Point Machines shall not be overstressed in performing its duty. Efforts should be made to minimise friction and the effort to throw the points. Flange relief of the point tongues is one such feature and there are others such as PTFE slides and supporting rollers.

The flangeway in advance of the point tips shall not be less than 41mm. It shall be consistent with the wheel/rail interface report.

The amount by which nominally 'closed' point tongues may be open at their tips whilst still providing detection, shall be agreed as a part of the wheel/rail interface criteria.

Each Point Machine shall be clearly identified and robustly labelled.

Point Machines of all types and their drive and detector rods shall be insulated from the running rails and from the surrounding earth. Separate earthing connections for the drive motor (where fitted) and the machine case shall be provided.

Point Machines of all types shall normally not require maintenance more frequently than at three-monthly intervals although inspection may be carried out more frequently.

All Point Mechanisms shall incorporate at least one volt-free change-over contact in both the 'Normal' and 'Reverse' positions, in addition to those required for detection purposes.

In the case of Point Machines incorporating an over-centre device, it shall not be possible for the machine to be set in the 'null' position during powered or sprung operation, as applicable.

26.10.2 Specific Requirements for Motorised Point Machines

The Point Machines will operate from a 230Vac supply.

The Point Machine shall be capable of operating the two point tongues for the full throw required to provide the standard 'blades open' gap, to clear the backs of the flanges of the wheels. However, the throw shall not be so great as to flex the tongues further than necessary, thereby introducing unnecessary stress in the track components and load on the operating machine mechanism. This dimension 50mm,+5/-0mm will be finalised after the wheelset profile has been determined and the Wheel-Rail Interface Report has been finalised in the Detailed Design Phase.

26.10.3 Specific Requirements for Sprung Point Mechanisms

The Spring Point Mechanism shall be capable of being biased to effect a route to either lie of the points. The mechanism shall normally set the points in their 'Normal' position but by adjustment, they shall be capable of being set in the 'Reverse' position.

In both cases, it shall be possible to change the lie of the points using the standard points operating bar with an effort not exceeding 230Nm.

Only the incursion of a foreign body in the space between the point tongue and the stock rail shall prevent a satisfactory change in the lie of the points.

The lie of the points shall be continuously maintained in the 'Normal' (or if adjusted, 'Reverse') position by adequate spring pressure.

After having been forced across by the passage of a tram, the mechanism shall positively return the points to the 'Normal' position and provide the standard 'blades open' gap, to clear the backs of the flanges of the wheels.

If possible, by the rearrangement of components, the Spring Point Mechanism shall be convertible into a Bistable Point Mechanism for the avoidance of spares duplication.

26.10.4 Specific Requirements for Bistable (flip-flop) Point Mechanisms

The Bistable Point Mechanism shall be capable of being biased to effect a trailing route through either lie of the points, by use of a standard points operating bar. The mechanism shall normally retain the points in the position last trailed. However, by operation using the approved points operating bar, they shall be capable of being set in the alternative position.

Only the incursion of a foreign body in the space between the point tongue and the stock rail shall prevent a satisfactory change in the lie of the points.

The lie of the points will be continuously maintained in the position last trailed by adequate spring pressure.

After having been forced across by the passage of a tram, the mechanism shall positively leave both blades of the points held firmly across with the 'closed' point against the stock rail and provide the required 'blades open' gap, to clear the backs of the flanges of the wheels on the other side.

The amount by which nominally 'closed' point tongues may be open at their tips shall be within the same tolerances specified for points operated by powered Point Machines.

If possible, by the rearrangement of components, the Bistable Point Mechanism shall be convertible into a Spring Point Mechanism for the avoidance of spares duplication.

26.10.5 Specific Requirements for Hand-Operated Point Mechanisms (Point Levers)

Points operated by Hand-Operated Point Mechanisms shall normally be traversed in the facing direction subject to a 10 km/h track speed limit.

One throw of the lever shall fully throw the points to either 'Normal or 'Reverse' positions. Levers which require one or more attempts to complete the operation are not acceptable.

It shall not be possible to inadvertently partially throw the points, which shall always throw sufficiently to allow the respective 'points thrown' indication at each lie of the points to be given with a single movement of the lever.

Only the incursion of a foreign body in the space between the point tongue and the stock rail shall prevent a satisfactory change in the lie of the points.

After having been thrown, the mechanism shall positively leave both blades of the points held firmly across with the 'closed' point against the stock rail and provide the required 'blades open' gap to clear the backs of the flanges of the wheels on the other side.

The amount, by which nominally 'closed' point tongues may be open at their tips, shall be within the same tolerances specified for points operated by powered Point Machines.

26.11 Technical Requirements for Point Control and Indication

26.11.1 Detection

Where detection and indication is required, the mechanism shall be fitted with detection equipment capable of differentiating between a 'safe' and 'unsafe' gap. When closed, the detectors must be capable of detecting a minimum gap of 1.5mm although the 'unsafe' gap detection including a safety margin will be slightly greater than this at 2.5mm, +0/-0.5mm between the closed point tongue and the corresponding stock rail at each lie of the points. To be confirmed with wheel/rail interface criteria.

Each point tongue shall be independently detected through a separate mechanical connection to the point tongues, independent of the drive rod connection and as close as practicable to the tip of the tongue. Totally enclosed proximity switches are preferred for this duty.

26.11.2 Control

The Point Controller shall receive information from the Tram Position and Detection System (TPDS) and set the Points and Point Indicators and shall be driven by the output from the point detection.

The Point Controller shall acknowledge the requests from TPDS and make all the necessary safety checks before commanding the point machine to move the points.

When the Point Controller causes the Point Machines to change the points, it shall monitor the detection contacts in the associated Point Machine(s) to determine whether the points have fully thrown.

Once the points have been satisfactorily operated (i.e. been fully thrown), the Point Indicator shall show a sloping row of lights (or LED clusters), corresponding to the lie of the point to approaching trams. If the points have not fully thrown, a horizontal row of lights (or LED clusters) shall be displayed.

If an appropriate command has been set by personnel in the Control Centre, the Point Controller shall block any associated points requested by the tram on-board computer from its route code.

The Point Controller shall report to the adjacent Tram Position and Detection System and or SCADA when any of the following conditions apply:

- Failure of the Point Machine supply;
- Failure of the Point Indicator supply;
- Receipt of an indication of faulty point detection; and
- Failure of the Point Heaters supply.

When the relevant track circuits or mass detectors detect the presence of a tram in a prescribed area, the Point Controller will lock the points against any further signals to change them until the tram has left the prescribed area.

The Point Controller shall also afford the facility to set and control the associated points locally.

26.11.3 Indication

The lie of the points shall be indicated to trams approaching the toe of the points in a facing direction. Indication of trailing points likely to be taken at high speed shall also be considered. The specific requirements at each location are defined on the track layout diagram.

The basic technology and design of the point indicator shall be same as the tram signals. The colour shall not be white, red or green.

Point indicators shall exhibit the following standard aspects to drivers:

- Points set to left hand route: diagonal row of lights sloping upwards towards the left;
- Points set to right hand route: diagonal row of lights sloping upwards towards the right; and
- Points not detected: horizontal bar

The indicator shall be placed for visibility to the tram driver in the same basis as tram signals.

The means of illumination shall be by LEDs.

A minimum of five clusters in each row shall be provided.

All Point Indicators shall be located in agreement with the Operator and shall be co-located where relevant with tramway signals.

Each Point Indicator shall be clearly identified and robustly labelled.

The aspect shall be clearly visible in all weather conditions.

The Point Indicators shall normally not require maintenance more frequently than at three-monthly intervals although inspection may be carried out more frequently.

26.11.4 Control Cabinet

Controls to set and control the associated points locally shall be provided in a cabinet. These shall be operable while the relevant points are in direct view of the person operating them.

The Point Controller cabinet shall contain the power supply for the operation of the associated points and to all associated Point Indicators.

The Point Controller cabinet shall contain and control with an input from the SCADA system, the power supply to the point heaters mounted on the associated points.

The Point Controller shall not require maintenance more frequently than at six-monthly intervals although inspection may be carried out more frequently.

26.12 Indication of Hand Operated Point Mechanisms (Point Levers)

The lie of the points shall be indicated to trams approaching the toe of the points in a facing direction.

Upon the operating lever being thrown, a simple mechanical device will detect that the closing point tongue has closed to within the permitted tolerances specified above.

Detection of the fully thrown condition shall cause a mechanical indicator to display a corresponding indication to the tram driver. The indicator shall present an indication equivalent to that shown on lit indicators and be visible from the normal tram driver's operating position in the cab, when the tram is 5 metres to the rear of the point tips, in daylight and illuminated by the tram's headlights after dark. Failure to close the tongue to within this tolerance shall not allow the indicator to show a 'points thrown' indication. Both point tongues shall be detected, either individually or as a coupled pair.

26.13 Technical Requirements for Points Heating

Points heating systems will allow the efficient operation of points in low temperatures and shall be such that the components will not intrude into the surrounding infrastructure.

Points heating shall be electrically powered and shall be controlled automatically by sensing when the predefined temperatures for activation and deactivation have been reached.

Point Heating devices shall provide health status information via the SCADA to the Control Centre.

Point Heaters shall be capable of being manually activated and/or deactivated locally and from the Control Centre.

The locations at which point heating shall be provided will be agreed and shown on the track layout diagram.

Where more than one heater is controlled from a Point Controller, it shall energise each of them in sequence in order to limit the inrush current demanded.

The Point Controller shall monitor the local ambient temperature and humidity and control the supply to the point heaters accordingly.

The settings at which the point heaters are energised shall be adjustable within the limits of 0°C to + 5°C.

26.14 Tolerances

The following definition of construction and maintenance tolerances shall be developed and agreed between Infraco and **tie**.

Element	Qualifier	Comment	Unit	Comment	Desirable Value	Limiting Value	Exceptional Limiting Value
Speed	Shared running	Maximum	kph		**50**	**50**	**50**
Speed	Segregated running	Maximum	kph		**80**	**80**	**80**
Speed	Depot	Maximum	kph		**15**	**15**	**20**

Table 62 - Speed assumptions and normal limitations

Element	Qualifier	Comment	Unit	Comment	Desirable Value	Limiting Value	Exceptional Limiting Value
Geometric element	Minimum length		m		**15**	**12**	**6**

Table 63 - Geometric Elements - Element lengths are tied to the tram length, specifically distance between bogies

Element	Qualifier	Comment	Unit	Comment	Desirable Value	Limiting Value	Exceptional Limiting Value
Horizontal radius - Minimum	Running lines	Slab track	m		50	30	25
Horizontal radius - Minimum	Depot lines		m		50	40	20
Horizontal radius curves	Distance between opposite flexure	Radii dependant - no transition curves	m	Considered minima dependant upon tram data	15	10	6

Element	Qualifier	Comment	Unit	Comment	Desirable Value	Limiting Value	Exceptional Limiting Value
Horizontal radius curves	Distance between opposite flexure	With transitions on adjacent opposite flexure curves	m	Exceptional to be considered individually (also refer wheelbase)	10	8	6
Horizontal radius curves	Distance between curves of opposite flexure	Turnouts - theoretical tangent points at switch toe to next tangent pt (of opposite flexure)	m	Considered minimums dependant upon tram data (wheelbase)	10	8	6
Horizontal radius curves	Distance between curves of opposite flexure	Turnouts - theoretical tan.pt. at switch toe to tan.pt. (of similar flexure)	m	Considered minimums dependant upon tram data (bogie axle ctrs)	5	3	2
Horizontal radius curves	Tramstops		m	Absolute minimums	Infinity	2000	1000

Table 64 - Horizontal Curves: Minimum requirements for horizontal curves including distances between similar and opposite flexure. Similar requirements also for horizontal curvature up to turnouts and through Tramstops.

Element	Qualifier	Comment	Unit	Comment	Desirable Value	Limiting Value	Exceptional Limiting Value
Cant	Platforms		mm		0	0	0
Cant	Tangent track	Facilitate drainage	mm		0	15	15
Cant	Fixed Obtuse crossings		mm		0	15	30
Cant	Curves		mm	Subject to Tram	75	75	100
Cant	Plain line track – depot		mm		0	0	15

Table 65 – Cant: Maximum cant values

Element	Qualifier	Comment	Unit	Comment	Desirable Value	Limiting Value	Exceptional Limiting Value
Negative cant	Plain line		mm		0	15	15
Negative cant	Turnouts	Turnouts - when turnout is facing downhill on a grade	mm		0	0	15
Negative cant	Turnouts	Turnouts and acute diamond crossings	mm		0	0	15
Negative cant	Turnouts	Obtuse crossings in diamonds	mm		0	0	0

Table 66 - Negative Cant: Maximum allowable values which are particularly important with regard to turnouts and obtuse crossings.

Element	Qualifier	Comment	Unit	Comment	Desirable Value	Limiting Value	Exceptional Limiting Value
Cant excess			mm	Subject to Tram	0	25	50

Table 67 - Cant Excess - Normally applied where slow speed running may be encountered, but does have some bearing in this concept.

Element	Qualifier	Comment	Unit	Comment	Desirable Value	Limiting Value	Exceptional Limiting Value
Cant deficiency	Plain line		mm	Maximum	40	60	75
Cant deficiency	Plain line - Depot		mm		40	75	100
Cant deficiency	Through route of turnout	On tangent or curved track	mm		0	40	60
Cant deficiency	Turnout route		mm		40	60	75
Cant deficiency	Based on theoretical radius at switch toe	Cant deficiency based on theoretical radius formed by shortest wheel-base placed centrally at switch toe	mm		40	40	50
Cant deficiency - jerk	At switch toes Consider shortest wheelbase	Maximum permitted jerk rate at switch toes using theoretical radius formed by shortest wheel-base	m/s3	jerk = 0.2 m/s3	0.3	0.4	0.5
Cant deficiency - jerk	Plain line Consider shortest wheelbase	Maximum permitted jerk rate as a result of the geometry change and shortest wheel-base	m/s3		0.25	0.35	0.45

Table 68 - Cant Deficiency: Deficiency at the switch toe will require careful consideration, effectively setting speed restrictions. Particular impact on the criteria will be to assess jerk with reference to the shortest wheelbase.

Element	Qualifier	Comment	Unit	Comment	Desirable Value	Limiting Value	Exceptional Limiting Value
Transition curves	Virtual Transition	Length basis	m	Subject to Tram	No use	1.8	1.8
Transition curves	Clothoid	Minimum length	m	Subject to Tram	15	10	6

Table 69 - Transition Curves - Dimensional requirements with some relationship to the tram dimensions

Element	Qualifier	Comment	Unit	Comment	Desirable Value	Limiting Value	Exceptional Limiting Value
Cant gradient	Cant gradient - Maximum permitted	RoCC may be overwritten by other minimums		Consider RoCC	RoCC	600	300
Cant gradient	Cant gradient - Minimum permitted				1500	2000	3000
Cant gradient	Switch toes				0	0	0
Cant gradient	Crossings and diamonds				0	0	0

Table 70 - Cant Gradient: Permitted maximums which, in effect, define twist parameters (dealt with later). Note: All the following apply only in the cases of applied cant on track on zero grade. For track on a grade or a vertical curve, where a twist in the track will arise from a horizontal curve, the maximum gradient that arises from applied cant must be less than the following limits (i.e. one in (value greater than following limits)) because an element of effective cant gradient will result from the combinations of horizontal curve and grade / vertical curve. In the latter cases the gradients that arise from applied cant are governed by the overall twist limits which are specified in table 78 below.

Element	Qualifier	Comment	Unit	Comment	Desirable Value	Limiting Value	Exceptional Limiting Value
Rates of change – cant		Rate of change of cant	mm/s	Subject to Tram	35	55	68
Rates of change - cant def		Rate of change of cant deficiency - plain line	mm/s	Subject to Tram	35	55	68
Rates of change - cant def		Rate of change of cant deficiency - S&C	mm/s	Subject to Tram	35	55	80

Table 71 - Rates of change of cant (RoCC) & Rates of change of cant deficiency (RoCCD) - Rate of change in lateral acceleration.

Element	Qualifier	Comment	Unit	Comment	Desirable Value	Limiting Value	Exceptional Limiting Value
Vertical alignment	Sag	Vertical curve radius - minimum	m	Subject to Tram	1000	625	500
Vertical alignment	Hog	Vertical curve radius - minimum	m	Subject to Tram	1000	625	500
Vertical alignment	Vertical acceleration		% of g		2	2	4
Vertical alignment	Turnouts and diamonds	Vertical curve radius. Proximity of vertical curve tangent point to switch toe and crossing of turnouts and diamonds.	m		15	10	6
Vertical alignment	Advance sws - xng & sws	Vertical curve radius	m		0	0	0
Vertical alignment		Minimum curve element length	m		20	15	10

Element	Qualifier	Comment	Unit	Comment	Desirable Value	Limiting Value	Exceptional Limiting Value
Vertical alignment	Instantaeneous change in grade		%		None	0.1	0.2
Vertical alignment	Grade distance between adjacent curves (similar flexure)	Preferred situation	m		None	None	None
Vertical alignment	Grade distance between vertical curves of opposite flexure	With combined average radius ***less than*** 3125m	m		15	10	6
Vertical alignment	Grade distance between vertical curves of opposite flexure	With combined average radius ***greater than*** 3125m.	m		15	10	0

Table 72 - Vertical Alignment - Some elements require consideration from the tram supplier, others refer again to element lengths

Element	Qualifier	Comment	Unit	Comment	Desirable Value	Limiting Value	Exceptional Limiting Value
Vertical geometry	Tramstops	Radius through tramstops (without exceeding gradient criteria)	m		Infinity	2000	1000

Table 73 - Vertical Geometry: Tramstop requirements

Element	Qualifier	Comment	Unit	Comment	Desirable Value	Limiting Value	Exceptional Limiting Value
Gradients			%		5.0	6.7	8.0
Gradients	Tramstops		%		1.0	2.0	2.5

Element	Qualifier	Comment	Unit	Comment	Desirable Value	Limiting Value	Exceptional Limiting Value
Gradients	Stabling	Maximum – includes locations where tram driver is routinely required to leave driving position	%		0.0	0.1	0.2
Gradients	Turnouts and junctions	Dependant upon twist and negative cant	%		0.2	3.0	6.5

Table 74 – Gradients: Maximum gradients in various locations

Element	Qualifier	Comment	Unit	Comment	Desirable Value	Limiting Value	Exceptional Limiting Value
Twist (as part of the design)	Short wave (over bogies)		$^0/_{00}$	Subject to Tram	1.5	2.0	3.3
Twist (as part of the design)	Long wave over length of vehicle	Project Tram geometric capability 10m @ 3mm $^0/_{00}$ + 10mm -- i.e. 30+10 = 40 (or 4 $^0/_{00}$)	$^0/_{00}$	Subject to Tram	1.5	2.0	3.3

Table 75 - Twist

The above represents the limits on the overall twist in the track that is a summation of: any gradient arising from applied cant; effective combinations of horizontal curves and grades / vertical curves; and other twisting effects (e.g. resulting from induced crossfalls for road drainage).

Twist is introduced into the track whenever cant is applied and when track with zero cross-level has a combination of horizontal curvature and vertical curvature or gradient.

Such geometry creates a twist, which has to be negotiated by the tram vehicle. Clearly the tram has to be capable of handling such geometric situations. Certain manufacturers may define these criteria in their own way, an interpretation of which is indicated below.

Twist in the long wave is measured over the wheelbase (bogie centres); short wave being measured over the axle centres of the bogie. Short wave twist also leads to wheel un-loading, not, as yet, defined here.

Element	Qualifier	Comment	Unit	Comment	Desirable Value	Limiting Value	Exceptional Limiting Value
Vert / Horiz alignment	Horizontal radius - 25	Vertical curve radius - minimum (product rule)	m	40k,30k,25k	1600	1200	1000
Vert / Horiz alignment	Horizontal radius - 30	Vertical curve radius - minimum (product rule)	m	40k,30k,25k	1333	1000	833
Vert / Horiz alignment	Horizontal radius - 40	Vertical curve radius - minimum (product rule)	m	40k,30k,25k	1000	750	625
Vert / Horiz alignment	Horizontal radius - 50	Vertical curve radius - minimum (product rule)	m	40k,30k,25k	800	600	500
Vert / Horiz alignment	Horizontal radius - 60	Vertical curve radius - minimum (product rule)	m	40k,30k,25k	667	500	n/a
Vert / Horiz alignment	Horizontal radius - 80	Vertical curve radius - minimum (product rule)	m	40k,30k,25k	500	n/a	n/a

Table 76 - Vertical/horizontal alignment combinations

Taking the comments above regarding twist, it can be seen the certain combinations of vertical and horizontal alignment can cause undesirable geometric situations. The tables below define, using a simple product rule, the limitations.

Element	Qualifier	Comment	Unit	Comment	Desirable Value	Limiting Value	Exceptional Limiting Value
Track spacing	Plus allowance for DKE	Double track main line - track centres - side poles	mm	- 3100			
Track spacing	Plus allowance for DKE	Double track main line - track centres - centre poles	mm	- 3600			
Track spacing	Plus allowance for DKE	Depot tracks and sidings - track centres		TBA Subject to Tram			
Track spacing	Plus allowance for DKE	Depot tracks and sidings - track centres - working space		TBA Subject to Tram			

Table 77 - Track Spacing. Note: straight track on radii larger than 350 metres on fixed non-ballasted trackform

Element	Qualifier	Comment	Unit	Comment	Desirable Value	Limiting Value	Exceptional Limiting Value
Gauge	Track gauge				1435	1435	1435
Gauge	Track gauge widening				0	0	0
Gauge	Track gauge-flange-running			TBA Subject to Tram			
Gauge	Check flangeway			TBA Subject to Tram			

Table 78 – Gauge: Standard data that requires further review/approval

Element	Qualifier	Comment	Unit	Comment	Desirable Value	Limiting Value	Exceptional Limiting Value
Rail inclination		Inclination - Vertical street grooved rail		TBA			
Rail inclination		Inclination - Non grooved rail		TBA Subject to Tram			

Table 79 - Rail Inclination

27 Roads and Utilities

This Section of the Employer's Requirements defines the roads and utilities requirements applicable to the Edinburgh Tram Network with which the Infraco must comply.

27.1 General

The roads works and utilities shall consist of all the necessary road works and associated accommodation works required to fully integrate the Edinburgh Tram Network into the urban road environment, including those relevant areas that are not trafficked.

The road works, utilities and associated accommodation works shall be provided in accordance with the Design Manual for Roads and Bridges (DMRB), except as amended by the requirements of, or otherwise agreed with, the relevant authority including where such requirements are more onerous.

The roads and utility works shall include but not be limited to the following:

- Road and junctions (including all necessary off-alignment works);
- Site clearance;
- Safety barriers and fencing;
- Drainage works including track drainage;
- Earthworks;
- Surfacing;
- Road lighting;
- Traffic signage and road markings;
- Traffic signals and tram signals;
- Landscaping;
- Temporary and permanent traffic measures;
- All associated cable ducting required for the works;

- Depot access and utilities, including within the Depot;

- Utility diversion works where not carried out by MUDFA; and
- Removal of all redundant services and apparatus affecting the works.

The works shall take account of MUDFA.

27.2 System-Wide Requirements

The tram network shall be segregated from the road wherever feasible using a variety of means as appropriate to the features and constraints of the individual locations. These include the use of road markings and varying surface types for visual or textural delineation. The design of the segregation details shall optimise their effectiveness without significantly compromising safety and operational factors, including the operation of junctions and emergency and maintenance access.

27.3 General Requirements

All works shall be carried out in accordance with the provisions of the Tram Legislation. All works on adopted roads shall be to a standard to allow subsequent re- adoption by the Roads Authority.

Wide-area modelling of traffic impacts consequent to the design shall be provided as a pre-requisite to approval, and prior agreement with the City of Edinburgh Council on the Traffic Regulation Orders and Temporary Traffic Regulation Orders necessary to implement the design and complete the works.

In addition to roads that have been adopted by the Roads Authority, the route for the tramway also uses roads that are currently in private ownership. In all cases the owners of private roads shall be consulted and their input and approval sought during the design process. Road works within these areas shall be to the same standard as that used for the roads adopted by City of Edinburgh Council (similarly, new and extended roads shall follow the same process). Where third parties are affected by a new or extended road their inputs and approvals where necessary shall be sought during the consultation process.

27.4 Stray Current

Refer to Stray Current of these Employer's Requirements at section 32.

27.5 Roads

27.5.1 General

The general requirements for the design of the roadworks shall meet the relevant Standards set out in Section 3.6 of these Employer's Requirements with emphasis on the following:

- Design Manual for Roads and Bridges (DfT);
- City Development Transport – Development Quality Handbook – Movement and Development (CEC);
- Edinburgh Standards for Streets (CEC); and
- Tram Design Manual (CEC).

27.5.2 Roads Design

The roads and track alignment shall be integrated in a manner that best uses the available space and optimises the alignment of both systems. Horizontal clearances between kerb lines of roads and tram network structures shall be not less than those set out in the relevant Department for Transport technical memoranda and the Department for Transport publication "Roads and Traffic in Urban Areas" and shall meet the guidance in ORR RSP2.

The requirements for geographical sections of the design and construction shall be discussed and agreed with **tie** and the City of Edinburgh Council to determine the extent of the proposed re-modelling, roadworks and (temporary and/or permanent) traffic management.

All surfacing materials shall comply with the DMRB requirements and consider City of Edinburgh Council's preferences. The integration of the Edinburgh Tram Network alignment, road design and road markings shall minimise the risk of road vehicles skidding on the rails. The finished works shall meet the serviceability requirements, balanced with commercial, social and environmental considerations. In particular, the following factors shall be taken into account:

- Make the best use of existing infrastructure;
- The requirements of the promoter (**tie** and CEC);

- Minimise the disruption to traffic;
- Minimise the public perception of waste and unnecessary disruption;
- Minimise the construction cost;
- Maximise the maintainability;
- Minimise the construction time;
- Minimise the excavation, material usage and hence vehicle movements; and
- Meet the needs of properties fronting onto the route of the tramway.

The Roads Design shall include but not be limited to:

- Identification of constraints and provision of typical sections;
- Tram / road interface review in the light of outputs from the design process;
- Provision of integrated tram/road design model;
- Assessment of the impact of the track alignment on the road design and layout;
- Assessment of the impact of the OLE design on the road design and layout;
- Layout drawings including extent of the works;
- Drawings detailing discrete locations where the vertical track alignment deviates from existing ground levels, this will include cross-sections and contoured plans as required;
- Standard details;
- Drawings to show changes to existing car parking provisions along the route, for example at Rosebery House, Haymarket including new access;
- Access and general arrangement layout to the Depot at Gogar;

- Consultation with City of Edinburgh Council, Scottish Environment Protection Agency and Scottish Water during the initial drainage design process identifying potential outfall locations and surface water treatment requirements for both roads and tram;
- Location of existing surface water drainage networks and outline routing of surface water from track and road drainage over the entire route;
- Standard details of drainage connections, sand traps, manholes, etc.;
- Pedestrian guardrails and boundary fencing;
- Interpretation of outputs from the traffic modelling process;
- Identification of junctions where existing traffic signals may need modification. Identification of locations where new traffic signals may require to be installed;
- Preparation of information to support the Traffic Regulation Orders and Temporary Traffic Regulation Orders. This will be based on the roads design, or the latest road design available. Prior to submission for the Statutory Process the TROs will be reviewed against the latest design;
- Safety audits for all stages;
- Compliance with the approvals process;
- Layout drawings for tram / road interface at 1:500 scale;
- Final junction register;
- Integration of traffic and tram signalling systems determined by the traffic model and tram run-time simulation;
- Three-dimensional MX model for all roads design;
- Details including any special measures at specific locations;
- Detailed General Arrangement of new access to car park at Haymarket including any modifications to car park layout;

- General Arrangement and vertical alignment for new access road to the Depot at Gogar;
- 1:200 scale drawings for each junction;
- Detailed design of surface water drainage networks modelled using appropriate software;
- Detailed design of site clearance layout, boundary fencing, safety barrier and pedestrian guardrail, pavement, earthworks, signs and markings, kerbing, footways, traffic signal layouts and road lighting;
- Determination of the extent of modifications to existing traffic signals and new installation requirements. Preparation of a traffic signal equipment performance specification; and
- Links with the CEC UTC;
- Compliance with all side agreements entered into by CEC (whether final or in draft) with respect to the Parliamentary Tram Acts.

27.5.3 Road User Safety Audit

Road User Safety Audits shall be carried out as required by The City of Edinburgh Council and sufficient to demonstrate the integrity of the design process to HMRI (or the appropriate regime in force).

27.5.4 Cycleways

Where it is required that cycleways are provided as part of the Infraco Works these shall be designed and constructed in accordance with the relevant guidelines including:

- Design Manual for Roads and Bridges;
- City of Edinburgh Council "Roads Development Guidelines";
- Scottish Executive's "Cycle by Design"; and
- SUSTRANS "Cycle Friendly Infrastructure Guidelines for Planning and Design".

27.6 Drainage Including Track Drainage

All roads drainage shall be designed and constructed in accordance with The Design Manual for Roads and Bridges, Volume 4 and comply with The City of Edinburgh Council's requirements and the Scottish Environment Protection Agency standards. Where appropriate during the design process Scottish Water shall be consulted. The design parameters defined by these design codes and agreed by **tie** / CEC / SEPA / Scottish Water as being appropriate for the area and system shall be accommodated within the finished works.

At locations where the tramway drainage is connected to any other drainage system measures shall be taken to ensure that any by-products of the tram system are accounted for (e.g. provision of sand interceptors). Where necessary early involvement of the Scottish Environmental Protection Agency (SEPA) shall be sought to define and agree surface water outfall locations.

Provisions shall be included for the proper and effective drainage of grooved rails and point machine pits in road running track detailed in the relevant section of these Employer's Requirements.

Provision shall be made in trackwork for the interception of entrained debris in the system that drains surface water from grooved rails, to enable the easy collection and removal of detritus by means of planned maintenance.

Outlets from the grooved rail and point machine pit drains shall be connected directly to the roads drainage system. For on-street track, the track drainage system shall incorporate an insulated break from the storm water system.

Provision shall be made in trackwork for the effective drainage of the track structure on grass track, ballasted and other off-road running sections (except on bridges, viaducts and the like). Outlets from these drainage systems shall be connected to collector drains running alongside the track. Chambers for access to clean and maintain the collector drain pipes and for the interception and removal of entrained debris and detritus shall be incorporated in the collector system. Collector drain systems shall be connected to other systems or outfalls as appropriate for the local regime and existing drainage systems, and in accordance with the requirements of the relevant water utility, the Scottish Environmental Protection Agency, the roads authorities and all other authorities as appropriate.

The drainage of all new bridge structures shall be positive and, unless otherwise required by the relevant local authority, all surface water shall be piped to the local storm water sewer systems by a defined drainage path.

Particular attention shall be paid to ensure that surface water drainage systems in the vicinity of traction substations and cable ducts are routed to avoid any risk of flooding of electrical equipment areas, point machine chambers, and the ducts themselves.

27.7 Road Signs, Traffic Signals and Urban Traffic Control

Road signs shall comply with the Traffic Signs Regulations and General Directions 2002 and the Traffic Signs Manual. The works shall be consistent with the requirements stated in the Edinburgh Standards for Streets (CEC). The signage provided for the tramway and the mandatory road signs shall be considered holistically and measures shall be taken to avoid clutter that could lead to a confusing environment for road users.

The traffic and tram signalling systems shall support the run-time of the tramway whilst minimising the impact on other road users. It shall be fully integrated with the City of Edinburgh Council's urban traffic control system. A protocol will require to be developed with the City of Edinburgh Council regarding the installation and integration of the traffic and tram signals. The signalling system shall incorporate recent/current technological developments, as appropriate, to optimise the combined efficiency of the tram and traffic signals.

The traffic management system shall accommodate the direct and consequential impacts of the Tram system and will be subject to approval by **tie** and CEC Wide-area modelling of traffic impacts consequent to the design shall be provided as a pre-requisite to approval, and prior agreement with the City of Edinburgh Council to implement the design and complete the works.

27.8 Road Lighting and Road Furniture

The road lighting shall conform to the Council strategy on lighting applying current street lighting standards and the Tram Design Manual. The lighting columns and Overhead Line Equipment (OLE) poles shall be rationalised to minimise road clutter and ensure safety of all users. Similarly, the quantity and disposition of road furniture shall also be rationalised for visual and safety reasons. OLE is subject to prior approval of the CEC planning authority and is to be obtained through the design process.

Lighting and road furniture will require to conform with safety guidelines and pass all relevant stages of road safety audit which are to be undertaken within the road design for tram implementation.

27.9 Utilities

The Edinburgh Tram Network shall be designed and constructed such that there is a minimal requirement to divert existing public utilities.

The final alignment shall take cognisance of the need to avoid the diversion of utilities' system-critical apparatus such as high-voltage oil-filled cables, fibre-optic communication cables, and high-pressure gas mains, wherever possible. Any protection required to such utilities shall be instructed as a **tie** Change and follow the principles of Section 21.

Utility diversions that are not covered under the advance Multi Utilities Diversion Framework Agreement (MUDFA) including unknown apparatus that is found during the Infraco Works shall be instructed as a **tie** Change and follow the principles of Section 21.

27.10 OLE Poles

Location of Overhead Line Equipment poles will be designed so as to minimise the risk of traffic impact. Collision barriers shall be provided where there is a reasonably foreseeable risk of a collision between a road vehicle and an OLE pole. However, collision barriers are not the preferred solution and all reasonable mitigation efforts shall be made, and careful consideration given, in the location of poles to avoid the necessity for collision barriers. Should this not be achievable, the collision barriers shall be functional, practical and maintenance free with anti-climbing measures to prevent the public from climbing and standing on top of barriers. Details of such barriers shall be approved by the City of Edinburgh Council in their capacity as Roads Authority as well as for visual impact through the prior approvals process.

28 Structures

28.1 General

The Edinburgh Tram Network requires the construction, or modification to, a number of structures throughout its length. The work involved in the Edinburgh Tram Network will impact on bridges and retaining structures. This Section 28 sets out the requirements which the Infraco must comply with in relation to structures.

28.2 Structures List

The following is a list of the principal structures along the Edinburgh Tram Network.

Table 80 - Structures Schedule

Structure Ref.	Section	Structure Name	Description
S19	2A	Haymarket Station Viaduct	New underbridge
S18	1D	Leith Walk Railway Bridge	Existing underbridge over single railway line
S1	3A	Roseburn Terrace Bridge	Existing single span plate girder underbridge.
S2	3A	Coltbridge Viaduct	Existing three span masonry arch underbridge
S3	3A	St George's School Access Bridge	Existing single span masonry arch overbridge.
S4	3A	St George's School Footbridge	Single span steel truss footbridge
S5	3A	Ravelston Dykes Bridge	Existing single span masonry arch overbridge.
S6	3A	Craigleith Drive Bridge	Existing single span masonry arch underbridge.
S7	3A	Holiday Inn Access Bridge	Existing three span composite overbridge
S8	3A	Queensferry Road Bridge	Existing single span masonry arch overbridge.

Structure Ref.	Section	Structure Name	Description
S9	3A	Groathill Road South Bridge	Existing single span masonry arch underbridge.
S10	3A	Telford Road Bridge	Existing single span overbridge.
S12	3B	Crewe Road Gardens Bridge	Existing single span RC structure
S20	2A	Russell Road Bridge	New underbridge at Russell Road delta
W3	5A	Russell Road Retaining Wall One	New retaining wall required due to level difference.
W4	5A	Russell Road Retaining Wall Two	New retaining wall required due to level difference.
W18	5A	Murrayfield Tramstop Retaining Wall	
S21A	5A	Roseburn Street Bridge	New underbridge
S21B	5A	Murrayfield Stadium Retaining Wall	New retaining wall required due to level difference.
S21C	5A	Murrayfield Stadium Underpass	New underbridge
S21D	5A	Murrayfield Training Pitches Retaining Wall	New retaining wall required due to level difference.
S21E	5A	Water of Leith Bridge	New underbridge
S23	5B	Carrick Knowe Underbridge	New underbridge (Intersection Bridge)
S24	5B	Existing Saughton Road Bridge	Existing WEBS structure
S25	5B	Existing Broomhouse Road Bridge	Existing WEBS structure

Structure Ref.	Section	Structure Name	Description
S26	5B	South Gyle Access Road Bridge	New underbridge
W11	5B	Bankhead Drive Retaining Wall	New retaining wall required due to level difference.
S27	5C	Edinburgh Park Station Bridge	New underbridge (Intersection Bridge)
S28	5C	A8 Underpass	New underpass
W16	5C	A8 Retaining Wall	Now replaced by a slope.
W19	5C	Gyle Stop Retaining Wall	New retaining wall required due to level difference.
S32	6	Depot Access Bridge	New structure required to provide vehicular access from Gogar Burn roundabout to the new depot.
S29	7A	Gogar Burn Bridge	New underbridge
S33	7A	EARL Underbridge	No longer required.
W14	7A	Gogar Burn Retaining Wall One	New retaining wall required due to level difference.
W15	7A	Gogar Burn Retaining Wall Two	New retaining wall required due to level difference.
W100	3A	Roseburn Corridor Retaining Walls	
S17	1D	Tower Place Bridge	Existing underbridge at Leith Docks

Structure Ref.	Section	Structure Name	Description
S16	1D	Victoria Dock Entrance Bridge	Existing underbridge at Leith Docks
W1	1D	Lindsay Road Retaining Wall	Existing modular retaining wall adjacent to Lindsay Road.
S30	7A	Gogar Culvert One	New culvert
S31	7A	Gogar Culvert Two	New culvert
S34	7A	Gogar Culvert Three	New culvert
W8	5A	Baird Drive Retaining Wall	New retaining wall required due to level difference.
S22	5A	Balgreen Road Bridge	New underbridge
W9	5A	Balgreen Road Retaining Wall One	New retaining wall required due to level difference.

28.3 Proposed Structural Form

The approval for all structures and civil engineering works shall be in accordance with the Consents Programme and Schedule 14 (Design Management Plan). The proposals at all structures listed above shall be subject to review/acceptance by **tie** prior to application for consent being made to the City of Edinburgh Council, or Approval to Network Rail as appropriate.

28.4 Listed Structures

Due cognisance shall be taken by the Infraco of the historical status of any of the structures affected by the Infraco Works. Work on such structures will be subject to the relevant approval process, as described in the Consents Programme and Schedule 14 (Design Management Plan).

28.5 Vibration and Noise

Structures and civil engineering works shall be designed in accordance with **tie**'s Noise and Vibration Policy at 10.1.5.

28.6 Bearings and Movement Joints

The design shall minimise the need for bearings and movement joints within all the structures. Integral structures shall be adopted where feasible.

Where bearings are required, either elastomeric or pot type bearings shall be used to accommodate the longitudinal and transverse translations and rotations while minimising lateral loads on sub-structures.

All bearings shall be replaceable under full live loading.

The use of movement joints shall be minimised, but where proposed they shall be easily maintainable and replaceable.

28.7 Design Life

The design life of all structures is set out in Section 6 (Design Life) of these Employer's Requirements.

28.8 Design Standards

All structures shall be designed in accordance with the appropriate design standards – See Section 8 (Standards) of these Employer's Requirements. Adopted design standards should be listed by the Infraco in the Approval in Principle Form 'A', or equivalent, submitted to **tie** for individual structures.

28.9 Structure Loading

Structures supporting the ETN shall be designed to carry 0.5RL loading as defined in the Design Manual for Roads and Bridges (DMRB and BS5400 Part 2). The maximum allowable tram axle load is determined in 24.12 of these Employer's Requirements.

During the design of structures due cognisance shall be given to the loadings imposed by construction and maintenance vehicles. Any constraints upon the operation of construction and maintenance vehicles shall be identified and advised to **tie**.

28.10 Rail Break

All elements shall be designed and provided to cater for tensile breakage of one rail at any location at ultimate limit state only. The other unbroken rails and the supporting structure shall resist the unbalanced force from a broken rail. The force resisted by any element shall be the lesser of:

- The force resulting from the rail and concrete deck temperatures and shrinkage, or
- The sum of the clip resistances between the movement joints bounding the break.

The effect of rail break shall be considered in conjunction with rail tensile temperature effects and the tram dynamic weight, centrifugal, nosing and braking and/or traction effects. The partial load factor shall be taken as 1.0.

28.11 Clearances

As a minimum, clearances shall be to RSPG 2 Tramways requirements.

Structural designs shall take due cognisance of the potential developed kinematic envelope of Trams that may be operated on the ETN.

28.12 Finishes

Finishes to all concrete components of the Infraco Works shall comply with the following:

▪ All buried and permanently submerged surfaces	F1, U1
▪ Pier tops, bearing shelves and hidden surfaces	F2, U2
▪ Parapet Coping, Exposed surfaces	F3, U3
▪ Main bridge deck	U4
▪ Special finishes – where deemed appropriate these are to be agreed with **tie** and all relevant authorities (e.g. CEC structures department) taking cognisance of all cost and construction impacts.	Note

Table 81 - Finishes

28.13 Protection

Structural steelwork shall be protected by a paint system in accordance with the appropriate standard. Steel surface preparation and the application of high performance paint coatings shall provide a design life to the first maintenance intervention in excess of twenty years. This requirement takes precedent over other standards.

The top surface of the any bridge deck shall be protected with a proprietary sprayed waterproofing system in accordance with BD 47/99.

All buried concrete surfaces shall receive two coats of bitumen; and Pavix (or equivalent) is to be applied to all concrete surfaces exposed to salt spray. A risk based assessment is to be undertaken for approval by **tie** to identify the extent of anti-graffiti treatment to be applied to exposed concrete surfaces.

28.14 Infrastructure Maintainability

The infrastructure shall be designed to minimise maintenance requirements. In particular the design should allow access which will not adversely impact systems operation of the Edinburgh Tram Network for the completion of routine work.

Structures will be subject to regular general inspections and a principal inspection at a frequency of every six years. The principal inspection shall entail amongst others a close visual inspection of all

elements of a structure. Details of the inspection and maintenance regimes are to be developed by Infraco and approved by **tie**. Maintenance Requirements are detailed further in Table 92 – Structures at Section 40 of these Employer's Requirements.

28.15 Provision for Inspection and Maintenance

Access to the underside of decks for inspection and maintenance shall be via vehicular-mounted inspection platforms operating from ground level, where access is feasible within contracted design parameters. For maintenance of metal parapets, for example, access shall be from the walkways. For bridges across Network Rail infrastructure it will be necessary to undertake such inspections in accordance with Network Rail requirements.

28.16 Bearings

Mechanical bearings shall be replaceable by jacking up the structure's deck a nominal amount, which minimises disruption and physical works. Where this is required, track will be designed such that only the bridge track is displaced. The bearings shall not require replacement for at least 50 years. Where bearings are provided, suitable inspection and maintenance galleries shall be provided.

Unauthorised access to these galleries shall be prevented through the incorporation of suitable measures.

No specific provisions shall be made for inspection and maintenance of the bearings on piers. Access to these bearings will be via a hydraulic access platform.

28.17 Expansion Joints

Bridge expansion joints shall be of the sealed type and provision shall be made to carry any water seeping through the joint into the deck drainage system. Expansion joints shall be easily maintained and replaced.

28.18 Earthing and Bonding

Structures shall be designed to comply with the Earthing and Bonding Policy at Earthing and Bonding of these Employer's Requirements.

28.19 Protection against Stray Current

Where trackform is an integral part of the structures, it shall be designed to comply with Stray Current Section 32 of these Employer's Requirements.

28.20 Third Party Relationships

28.20.1 Road Closure and Traffic Management

All Infraco Works affecting road traffic will be subject to the granting of permissions from relevant parties and may involve road closures or traffic management measures approved by CEC or the owner of the affected road. All such approvals are to be in place in advance of of any traffic impacts and comply with the requirements of Project Management Processes

In particular, the following works are expected to have a significant effect on traffic movements and may require particular consideration:

- Groathill Road Bridge and Craigleith Drive Bridge may require road closures for the duration of the Infraco Works;
- Construction of the abutments and new deck for Roseburn Terrace Bridge will require temporary closure of the A8 and partial workings within the carriageway;
- The construction of a structure, passing under the A8 to the east of Gogar roundabout, shall require significant traffic management to minimise disruption to traffic during construction. Additionally consideration will be required for the traffic impacts to the construction of the Depot Access Bridge and A8 retaining wall structures;
- Ocean Drive Bridge widening may require road closure for the duration of the Infraco Works;
- Roseburn Corridor Structures will be impacted an may require temporary traffic constraints (Ravelston Dykes Bridge, Holiday Inn Access Bridge, Queensferry Road Bridge, Telford Road Bridge, Crew Road Gardens Bridge;
- Tram bridges to be constructed over live roads may require some traffic constraints including Haymarket Station viaduct, Russell Road Bridge, Roseburn Street Viaduct, Balgreen Road Bridge, South Gyle Access Bridge.

28.20.2 Other Interested Parties

All relevant third parties shall be consulted by Infraco as required during the course of. In particular, this will include in relation to structures:

- Network Rail – noting particularly the Carricknowe and Edinburgh Park Bridges;
- Forth Ports;
- Edinburgh Airport Limited;
- Edinburgh Park Management Limited / New Edinburgh Limited; and
- Scottish Rugby Union.

28.20.3 Landscaping and Boundary Treatment

The Design Manual sets out the parameters of the design elements of the environmental mitigation measures to be implemented. The design guidance and requirements contained within the Design Manual shall be considered by the Infraco taking into account the CEC's own Development Quality Guidelines. (They include: Quality of Landscaping in New Developments, Biodiversity, Tree protection and Urban Forestry.)

A Landscape and Habitat Management Plan (LHMP) shall also be identified and prepared for the approval of **tie** and subsequent presentation to the CEC. It should be noted that there is a requirement for the LHMP applicable to the Roseburn Corridor to be specifically approved by the CEC Planning Committee.

A Boundaries Treatment Management Plan shall be created and updated by the Infraco to reflect emerging issues regarding boundary interface design matters between the track and adjoining ownerships. In general, all landscaping and boundary measures shall be in keeping with the surrounding environment and shall be consistent with the local character of the relevant area.

Where it is determined that fencing is required either to physically segregate the tram track or to separate the tram from other parties (for example Network Rail) the fencing shall be of a type and standard that provides the necessary separation and satisfy the requirements of the other party. In the case of Network Rail it must conform to their Group and Company Standards. The design will take into account concerns with respect to an individual having safety space in a fenced route.

Boundary treatments shall take cognisance of the need for appropriate noise mitigation measures, as well as other appropriate ecological works (e.g. badger mitigation) ensuring all Infraco Works have achieved all relevant approvals. In particular it is required that such boundary treatment and noise mitigation measures meet with the requirement to provide an end result which is no worse than the environmental impact assessment and presented in the Environmental Statement which was presented as part of the parliamentary submission.

29 Depot

29.1 Scope

This Section of the Employer's Requirements defines the Depot requirements applicable to the Edinburgh Tram Network (ETN) which the Infraco must comply with.

29.2 Depot, Buildings and Associated External Works

The Depot shall be of an economical design which reflects economy of use and maintenance in providing all the functionality required by **tie**.

The Depot shall provide the facilities to operate, service, repair and maintain a reliable passenger service.

29.3 The Site

The Depot site in Gogar is located in the vicinity of Edinburgh International Airport and has constraints imposed upon its design by the Civil Aviation Authority due to the proximity of the emergency runway at the airport. Factors to be accommodated in the design and construction of the Depot include height restrictions that shall necessitate detailed discussions with the aviation authorities.

29.4 Staff Halt

At a location to be agreed by **tie**, shelters shall be provided for the sole use of tram crew and other staff working on the Edinburgh Tram Network so as they can board the Trams. The staff halt shall comprise of shelters not less than 2.5m x 2m which shall provide weather protection. The staff halt will be linked to the Depot by a designated walking route leading to a controlled gate in the Depot boundary fence. The shelters shall be monitored by CCTV cameras, if they are not visible from the Depot Control Centre. The shelters will be provided with telephones providing a dedicated link to the Depot Control Centre.

The staff halt shall not introduce any speed restriction to the passage of Trams.

29.5 Drainage

The general site area shall be lowered to ensure that all structures are below the flight path. As a result of this excavation, both foul and surface water drainage may need to be pumped from the permanent works to off-site outfalls.

29.6 Access

Road access from the A8 Gogar roundabout link road shall provide both entry and exit for normal Depot operations traffic and also for delivery and egress of Trams with the minimum of impact on other facilities. Height restrictions on vehicle loads shall be verified in relation to the Airport operations. The link road giving access to the Depot may be extended by others and will cross the Tram route to the Airport, and the Depot entry track.

29.7 Utilities

Existing utilities and sewers crossing the Depot Site site shall be protected or re-located as appropriate and shall be instructed as a **tie** Change and follow the principles of Section 21.

29.8 Depot Site Layout

The configuration of the Depot and the use of the equipment contained therein shall minimise disturbance to neighbours.

Allowance shall be made in the site layout adjacent to the Depot building to accommodate temporary office facilities that may be needed during the construction, testing and commissioning phases of the Infraco Works. This shall include the provision of temporary electricity and water services.

The Depot site shall accommodate a zone within which the required accommodation can be located.

The Depot shall be secure and be provided with security systems as appropriate.

- The Depot shall have a suitably robust security fence 2.4m high shall enclose the Depot site with controlled entry points for Trams, vehicles and pedestrians. The security entry points shall be unmanned with security control systems providing the means of operation. These shall be centred on the Depot reception during normal office hours with transfer to the Control Centre at other times.

- The Depot shall incorporate two separate access points to the running lines.

- The entire Depot external operating area within the perimeter fence shall be provided with a comprehensive CCTV surveillance system, the images from which shall be displayed in real-time in the Control Centre. The cameras shall form part of the network CCTV system (refer to Section 35 (Supervisory Control and Communications Systems) of these Employer's Requirements. In particular a CCTV system shall be provided to view the Depot vehicular and

pedestrian entrances. It shall be integrated with the entry systems and shall be centred on the Depot reception during normal office hours with transfer to the Control Centre at other times.

The current reference design sets the Depot site below existing ground level and retaining structures shall be constructed as necessary along the A8 site boundary. These structures shall also form the ramp for the through track of the tram system to the Airport.

- The stabling area and its configuration shall be established by the combination of track requirements and the Depot building footprint. The Depot layout shall accommodate a minimum of 36 berths. The stabling facility shall be built to accommodate an initial 27 x 44m Trams. Adequate provision shall be made to allow cleaning personnel to move around berthed Trams.

- Set between the stabling roads shall be access paths alternately at least 1.0m and 2.0m wide with service points to provide facilities for Tram cleaning and minor maintenance on the 2.0m width paths.

- The desirable longitudinal gradient of all tracks within the Depot shall be zero. The absolute maximum longitudinal gradient shall be 0.4%. Cross-level gradient (cant) of all tracks shall be zero (see Section 26 (Track) of these Employer's Requirements).

- At the ends of any tracks that terminate, a Tram-arresting device shall be provided.

- A track shall be provided to enable Trams to be loaded and off loaded onto/from road transportation.

- A servicing track shall be provided complete with a tram wash plant and hand windscreen cleaning points. Road access shall be provided for detergent deliveries to the wash plant.

- The wash plant shall be located inside a shelter (the shelter need not extend the full length of the Tram being washed) – see Table 83 - Depot Plant and Equipment to be Provided of these Employer's Requirements, where the operating temperature range is set out. The facility will be provided with suitable devices to remove excess moisture from the washed vehicles. High quality results, at least as good as those achieved by Lothian Buses on their fleet, shall be delivered by this facility.

- Sand filling points within an enclosed structure shall be installed on the servicing track. The bulk sand silo (capacity at least 30t) and associated feeder equipment shall be located close by, along with the provision of road access for sand deliveries.

- A suitably drained bogie wash point shall be provided in the apron at the front of a Tram entry point to the workshop which allows demounted bogies to be easily manoeuvred in and out of the workshop. Plant used for this operation shall be transportable and housed within the main workshop. Power and water shall be provided to allow the tram pressure washer to be utilised at this location. Treatment of wastewater, to meet appropriate standards prior to connecting to the site drainage system, shall be provided.

- Car parking shall be provided for one third of the personnel employed on the Depot site. Within this provision, visitor car parking shall be provided close to the Depot entrance for no less than six vehicles.

- Servicing areas for external stores and containment of waste shall be provided.

- A sub-station for both traction power (main line and depot feeds) and domestic Depot supplies shall be provided.

- Due to the proximity of the Airport runway, planting and landscaping within the Depot site shall be restricted and consistent with CAA guidance to prevent bird strikes. Native species of plants shall be used where possible and shall be compatible with Tram operations.

- The Depot site shall be appropriately lit.

29.9 Depot Building

The following identify the principal features of the Depot building:

- The main Tram workshop, other workshops, stores, management, administration, operations and maintenance offices, staff welfare facilities (support accommodation) and the Control Centre for the complete Edinburgh Tram Network, shall be contained within a steel framed building clad in an insulated panel cladding system. The roof of the building shall be insulated to a suitable standard with the minimum number of penetrations.

- The building workshop shall accommodate a minimum of two tram maintenance roads, a wheel lathe road and a further tram service road.

- The support accommodation shall be arranged on two floors set to one side of the main tram maintenance workshop. The Control Centre shall be located at first floor level with the equipment room set below. A view of the depot external stabling area and tram entry/exit point shall be provided to Control Centre staff from within the Control Centre.

- The Depot shall be provided with the appropriate electricity supplies including 400V for individual items of workshop equipment both inside and outside the building, 230V for internal domestic use and 110V for small tools.

- Natural light in offices shall be maximised and all rooms shall be placed within the building in locations appropriate to their function. This shall be supplemented by artificial lighting consistent with the tasks undertaken and the hours of operation of the facility.

- Additional service space shall be provided for the accommodation of domestic services as well as for the accommodation and systems directly linked to the Tram operations.

- Full heating and ventilation will be provided throughout the building with air conditioning to the cControl Centre, equipment room, training and meeting rooms.

- Fire alarms and fire extinguishing systems shall be provided throughout the Depot building. Fire suppression shall be provided in the technical equipment room(s).

- Suitable office furniture shall be provided for all areas within the Depot building.

The following schedule of accommodation shall form the basis of the design for the office and welfare facilities attached to the Depot.

29.10 Schedule of Staff Numbers

The Depot shall accommodate the number of staff identified in the "Establishment with Expansion" column set out below.

Note: The locker rooms should have sufficient capacity for approximately 5% spare capacity on these numbers to cope with staff turnover and associated training overlap.			**Max Number on duty in the Depot at one time**	
Anticipated Job Title	**Establishment for Phase 1a/1b**	**Establishment with Expansion**	**Phase 1a/1b**	**With Expansion ratioed up**
OPERATIONS				
CORPORATE MANAGEMENT				
General Manager	1	1	1	1
Operations Manager	1	1	1	1
Commercial Manager	1	1	1	1
OPERATIONS				
Duty Managers	11	12	4	4
Operations Supervisor	9	9	2	2
Operations Assistant	1	1	1	1
Drivers	112	126	11	12

Anticipated Job Title	Establishment for Phase 1a/1b	Establishment with Expansion	Phase 1a/1b	With Expansion ratioed up
OPERATIONS				
Engineering Manager	1	1	1	1
Vehicle Engineer	1	1	1	1
Infrastructure Engineer	3	3	3	3
Safety and Standards Manager	1	1	1	1
Performance Regime Manager	1	1	1	1
Clerk	1	1	1	1
FINANCE				
Finance Manager	1	1	1	1
Accounts Assistant	2	2	2	2
Administration				
Secretaries	1	1	1	1
Admin. Staff	2	2	2	2

Anticipated Job Title	Establishment for Phase 1a/1b	Establishment with Expansion	Phase 1a/1b	With Expansion ratioed up
REVENUE PROTECTION STAFF				
Inspectors	112	126	11	11
Cashiers	1	1	1	1
Revenue Protection Manager	1	1	1	1
INFRASTRUCTURE / VEHICLE CLEANING				
Cleaning Manager	1	1	1	1
Cleaners	20	23	10	11
SUB TOTAL	**285**	**318**	**59**	**67**
TRAM MAINTENANCE				
Office Staff	3	3	3	3
Storeman	1	1	1	1
Technicians	30	34	15	16

Anticipated Job Title	Establishment for Phase 1a/1b	Establishment with Expansion	Phase 1a/1b	With Expansion ratioed up
SUB TOTAL	**34**	**38**	**19**	**21**
INFRASTRUCTURE MAINTENANCE				
Office Staff	4	4	4	4
Storeman	1	1	1	1
Technicians	37	42	18	20
SUB TOTAL	**42**	**47**	**23**	**25**
SUMMARY				
Operations	285	318	59	67
Tram Maintenance	34	38	19	21
Infrastructure Maintenance	42	47	23	25

Table 82 – Schedule of Staff Numbers

29.11 Accommodation (First floor)

The first floor is to be occupied by the Operator. The accommodation set out below is required as a minimum and must be related in all respects to the numbers of staff to be employed and based at the Depot as set out in Table 82 – Schedule of Staff Numbers, where not otherwise specified. Appropriate account is also to be taken by the Infraco of the maximum numbers of staff indicated as being on the premises at any one time in sizing toilets, messing facilities etc.

- A Control Centre to include the equipment as defined in paragraph 35.13 and allow a good ergonomic layout for the functions carried out therein.
- A room adjacent to the Control Centre, with sufficient space for the incorporation of the necessary furniture and technical equipment used to store and manage the handheld radios and ticketing equipment and their batteries, together with one desk space.
- A cash office adjacent to the Control Centre, with adequate space for two staff members and the associated equipment for cash counting and sorting, as well as a safe of an appropriate size.
- A viewing area shall be provided for visitors to view the Control Centre without disrupting the activity within.
- Windows shall be provided to provide a view into the tram workshop from the first floor. Suggested locations are adjacent to the Control Centre (if not inside, then integrated with the viewing area referred to above), adjacent to the engineering office, and in the viewing area.
- Adequate toilets and showers (Male, Female, Disabled).
- Access from the ground floor with at least two staircases and one lift (for disabled access and, unless other arrangements are available, for the lifting of equipment and furniture required on the first floor).
- One set of stairs is to give direct access between an external door (itself adjacent to the visitor's parking spaces) and the first floor. A reception area is to be provided at the first floor landing including an allowance for a reception desk and a minimum of four waiting chairs. A second set of stairs is to be adjacent to the Control Centre and provide a direct link, to a route from the staff parking/external access gate and the locker rooms, and to the walking routes onwards into the stabling sidings and to the access gate in the Depot fence to the staff halt on the main line.

- Office for the General Manager, sized for one person with meeting table for six people.
- Office for the Operations Manager, sized for two people. To be situated close to the Control Centre.
- Office for the Safety and Performance Managers, sized for two people.
- Engineering office, sized for three people, with meeting area for four people.
- Office for the Duty Manager and Supervisors, sized for three people.
- Office for the Finance and Commercial Managers, sized for two people.
- General office, sized for eight people.
- Messing facility, including limited self-service kitchen facility.
- Cleaning office and store.
- Interview room, close to the office of the Operations Manager.
- Meeting room for 10 people, close to the Reception.
- Two training rooms, one sized for 30 people and one for 15 people. The larger should be able to be subdivided, broadly in half. Note that this may be required to be on a permanent basis once the complete system is open for service.
- Space to locate the PABX and a computer server for the Operator.
- Locker Rooms, male and female in suitable proportion for the total relevant staff numbers and with an allowance for flexibility in recruitment. The design shall allow for flexibility in the division to allow for long-term changes in the proportions. The locker rooms should be placed conveniently for the Control Centre and messing facility. The space allowance for lockers should be based on two-thirds height/interleaved lockers.
- A store for uniforms and other small operational equipment.
- A records store.

- A location for photocopying.

29.12 Workshop General Requirements

- In the main workshop, all roads shall have traction power. The wheel lathe shall be placed in a central position to enable the workshop doors to be closed whilst the lathe is in operation;

- Gantry structures, for access to the Tram roof area from both sides, shall be provided for a minimum of two berths;

- Under-track pits shall be provided on no fewer than four tram maintenance berths incorporating access and egress stairs. Pits shall have adequate lighting, drainage and power tool sockets;

- 'Built-in' jacking points (i.e. lifting under the Tram bogies) shall be provided to one of the roads, which shall be provided with traction power, the pits containing this equipment shall be adequately drained;

- Battery charging equipment shall be provided for Tram batteries, fork lift trucks and all other battery powered equipment with associated ventilation equipment, in a dedicated area off the main workshop;

- Hydraulic and electronic workshop facilities, including bespoke test benches, shall be provided appropriate to the Trams. Fixed equipment, for the servicing and testing of hydraulic and electronic equipment shall be provided. The areas shall be capable of being separated from the main workshop area by closure of an industrial door; and

- Both heavy and light stores areas shall be provided complete with the necessary racking systems to suit the storage requirements of the spare parts required for all systems, equipment and Trams being supplied. Forklift truck access to these areas shall be provided. Stores are to be segregated between those required for the Tram Maintainer and those for Infraco.

29.13 Accommodation on Ground Floor

29.13.1 General Facilities

The ground floor is to be principally occupied by the Infraco. The accommodation requirements set out below is required as a minimum.

The design of the accommodation must be related in all respects to the numbers of relevant staff to be employed and based at the Depot as set out in Table 82 – Schedule of Staff Numbers, where not

otherwise specified. Appropriate account is also to be taken by the Infraco of the maximum numbers of staff indicated as being on the premises at any one time in sizing toilets, messing facilities etc.

The different spaces should be arranged grouped logically together and with respect to accesses etc. The workshop areas must also accommodate all relevant equipment listed in the Plant and Equipment Schedule – see Table 83 - Depot Plant and Equipment to be Provided.

- The equipment room shall be underneath the Control Centre. Necessary domestic plant rooms.
- A store for tram and infrastructure cleaning equipment.
- First aid room (suitable for all staff at the depot, accessible from the first floor and to an external vehicle access).

29.13.2 Facilities

- Staff access shall be arranged preferably, adjacent to the locker rooms and convenient for external access and with appropriate security.
- Adequate toilets and showers shall be provided (Male, Female, Disabled) serving both contractors.
- A messing facility, including limited self-service kitchen facility.
- Locker rooms, male and female in suitable proportion for the total relevant staff numbers and with an allowance for flexibility in recruitment. The design shall allow for flexibility in the division to allow for long-term changes in the proportions. The space allowance for lockers should be based on a full-height lockers for each relevant person. There should be dry locker rooms, sufficient for all Infraco staff, based on full-height lockers, and a drying room to include additional full-height lockers for all of the Infrastructure and Tram Maintenance staff.
- machine tool area, open to the tram workshop. This might be linked to the dirty workshop.

29.13.3 Tram Maintainer Specific Facilities

- A small store for workshop cleaning equipment.
- A location for a computer server for the Tram Maintainer.
- Tram Maintenance Managers Office, sized for one person with meeting area for four persons.

- Tram Maintenance General Office, sized for five persons.
- Tram Stores including office, small items store and large items store with access for fork-lift truck. The size of these shall be agreed with the relevant contractor.
- Battery store and charging area
- Clean workshop(s) for electronics and hydraulics
- Dirty workshop for bogie, with cross access track from the main vehicle workshop underneath the travelling crane; area could be linked with machine tool area

29.13.4 Infrastructure Maintainer Specific Facilities

- A location for a computer server for the Infrastructure Maintainer.
- Infrastructure Maintenance Manager's office, sized for one person with meeting area for four persons.
- Infrastructure Maintenance general office, sized for five persons.
- Infrastructure stores including small office, small items store and large items store with access for fork-lift truck. The size of these shall be agreed with the relevant contractor.
- Clean workshop for electronics
- Dirty workshop which could be the machine tool area.

29.14 Provisional Schedule of the Plant and Equipment

The plant and equipment to be provided and installed shall include, but not be limited to, the following:

Table 83 - Depot Plant and Equipment to be Provided

	No	Description	Function	Features	Fixed/Mobile/ Portable	Location used	Supplier	User	Maintainer	Access Control	Cleaned	Quantity
1		Cleaning Equipment										
	1.1	Tram Cleaning Equipment	Equipment for cleaning of tram interiors	110V Industrial vacuum cleaning equipment, ≥ 2kW power Equipment to allow removal Floor polishing equipment	P	Generally used in stabling areas However can be used throughout the Depot	T	O	O	O	O	6

	No	Description	Function	Features	Fixed/Mobile/ Portable	Location used	Supplier	User	Maintainer	Access Control	Cleaned	Quantity
	1.2	Tram pressure washer	Industrial washer for general tram cleaning within the Depot including bogie washing	Self powered Hot water/steam - self heating Pressure variable up to ≥200 bar Flow rate ≥12 l/min Lance and hose ≥10m Detergents compatible with Tram external finishes	M	Throughout Depot	T	T	T	T	T	1
	1.3	Infraco pressure washer	Removal Removal of fly posters General cleaning	Features as per Tram pressure washer Mobile towable bowser with capacity for up to one shift of cleaning Infraco to ensure	M	Across the ETN	I	I	I	I	I	1

	No	Description	Function	Features	Fixed/Mobile/ Portable	Location used	Supplier	User	Maintainer	Access Control	Cleaned	Quantity
				interchangability with tram pressure washer Readily transportable on back of road-rail and other road vehicles								

	No	Description	Function	Features	Fixed/Mobile/ Portable	Location used	Supplier	User	Maintainer	Access Control	Cleaned	Quantity
	1.4	Tram Washing Plant	Fixed plant for cleaning of Tram exterior	Unidirectional >15 tph continuously Minimised water consumption, maximised water recirculation controllable and monitored from Control Centre via SCADA system Self contained Pre-wet One pair application brushes Automatic end wash Two pair water wash brushes	F	Alongside main workshop	I	O	O	O	O	1

	No	Description	Function	Features	Fixed/Mobile/ Portable	Location used	Supplier	User	Maintainer	Access Control	Cleaned	Quantity
				Dryer Operates from -5°C ambient external temperature within shelter Final details TBD with tram supplier ≥70% water recycling Backflow prevention devices shall be installed. Treatment of wastewater to meet appropriate standards prior to connecting to site drainage system shall be provided.								

	No	Description	Function	Features	Fixed/Mobile/ Portable	Location used	Supplier	User	Maintainer	Access Control	Cleaned	Quantity
	1.5	Rail Groove Cleaning Equipment	P-way cleaning	Vacuum equipment to remove detritus/debris from grooved track including drain boxes and points Able to clean drains and gullies employing water jets Transportable on road/rail vehicle, lifted with crane or fork lift truck Self powered for full shift Easy collection/disposal of detritus/debris	M	Across the ETN	I	I	I	I	I	1

	No	Description	Function	Features	Fixed/Mobile/ Portable	Location used	Supplier	User	Maintainer	Access Control	Cleaned	Quantity
	1.6	Parts washer	Infrastructure/Tram component cleaning & degreasing in dirty workshop	Able to wash components ≤100kg, ≤750mm diameter	F	Within dirty workshop	I	I/T	I	I	User	1
	1.7	Floor scrubber	Depot floor cleaning	Industrial vacuum/brush scrubber equipment Compatible with floor finishes	M	Within Depot building	T	T	T	T	T	1
2		Mechanical Handling										
	2.1	Shunter	Manouveuring Trams within workshop	Battery powered Road/rail capability Capable of towing/propelling single Trams Speed up to 3 km/h	M	Throughout Depot tracks Road capability to move	T	O/T	I/T	O	User	1

	No	Description	Function	Features	Fixed/Mobile/ Portable	Location used	Supplier	User	Maintainer	Access Control	Cleaned	Quantity
				Local and remote control Charging facilities Coupler at each end		between tracks on hardstanding						
	2.2	Tram lifting system and stands	Lifting Trams to allow routine maintenance and removal of bogie(s)	Fixed underfloor system providing flush floor when not in use. Ability to lift fully functional, unladen tram. Synchronised lift from single control panel. Ability to stop and lock lift at any vertical positionInterlocking to	F	Main workshop	I	T	T	T	T	1 set

	No	Description	Function	Features	Fixed/Mobile/ Portable	Location used	Supplier	User	Maintainer	Access Control	Cleaned	Quantity
				protect Tram in event of system/component failure. Manually positioned stands to be provided Interlocking with OLE if required.								
	2.3	Fixed high level access platforms	To allow access to all equipment mounted on Tram roof	Capable of providing access to all roof mounted equipment on tram Decking to prevent tools or small to components falling through Handrails and toeboards to prevent	F	Main workshop	I	T	I	T	T	2 sets

	No	Description	Function	Features	Fixed/Mobile/ Portable	Location used	Supplier	User	Maintainer	Access Control	Cleaned	Quantity
				personnel/material falling Access/egress gates interlocked with OLE End protection								
	2.4	Overhead crane	Bridge type crane spanning 2 roads within the workshop to allow all material within main workshop to be transported up to and including size/weight of motor bogie	≥6.3 tonne capacity Vertical clearance <960 mm from hook (fully raised) to top of crane Traverses below OLE Interlocked with OLE Remote control using hand held device Multi-speed faciltiy - lift, traverse and travel	F	Main workshop	I	T/I	T	T	User	1

	No	Description	Function	Features	Fixed/Mobile/ Portable	Location used	Supplier	User	Maintainer	Access Control	Cleaned	Quantity
				Long and cross travel to cover all areas over the two roads								
	2.5	Mobile crane	Facilitate removal of miscellaneous equipment including bogie components within the dirty workshop	≥2t capacity Powered operation	M	Throughout workshops	T	T/I	T	T	User	1
	2.6	Bogie workstands	To allow dismounted bogies to be maintained	Allows bogie to be manoeuvred along the stub track in the dirty workshop Wheel locks Capable of supporting	M	Dirty workshop	T	T	T	T	T	1

	No	Description	Function	Features	Fixed/Mobile/ Portable	Location used	Supplier	User	Maintainer	Access Control	Cleaned	Quantity
				both trailer and motor bogie								
	2.7	Other tram equipment stands	Various stands to allow items of equipment to be stored and readily maintained when dismounted from the Tram	Infraco to propose depending on tram design Expected to include stands for doors, windows, body panels etc…	M	Throughout Depot	T	T	T	T	T	
	2.8	Accommodation bogies	To allow Trams to be moved within workshop once bogies have been removed or the Tram has been split at any articulation	Allows Tram to be manoeuvred throughout the depot once any combination of bogies has been replaced Allows entire tram to	M	Throughout Depot	T	T	T	T	T	

	No	Description	Function	Features	Fixed/Mobile/ Portable	Location used	Supplier	User	Maintainer	Access Control	Cleaned	Quantity
				be manoeuvred throughout the depot once any articulation has been split								
	2.9	Fork lift truck	Lifting and transporting miscellaneous equipment	Battery powered Charging facilities Road wheels >3 t lifting capacity Drum handling equipment Crane arm Capable of accessing all shelving and racking in stores-Infraco to demonstrate	M	Throughout the Depot but limited to hard standing areas when outside	T & I	T/I	T/I	T	User	1

	No	Description	Function	Features	Fixed/Mobile/ Portable	Location used	Supplier	User	Maintainer	Access Control	Cleaned	Quantity
	2.10	Pallet truck	Lifting & Transporting equipment particularly in stores	Manually manoeuvred, hydraulic lifting the Infraco to propose requirements. Infraco to provide integrated solution	M	Throughout the Depot but limited to hard standing areas when outside	I	T/I	T/I	T	User	The Infraco to propose
	2.11	Hand trolleys	Transporting tools and spares	Unpowered the Infraco to propose requirements. Infraco to provide integrated solution	M	Throughout the Depot but limited to hard standing areas when outside	I	T/I	T/I	T	User	The Infraco to propose

	No	Description	Function	Features	Fixed/Mobile/ Portable	Location used	Supplier	User	Maintainer	Access Control	Cleaned	Quantity
	2.12	Infraco lifting slings	General slings for lifting infrastructure heavy components on system and in Depot building	Infraco to propose. Stand for storage	P	Use on system infrastructure	I	I	I	I	I	The Infraco to propose
	2.13	Tram lifting slings	Specific lifting gear to allow all equipment to be removed and replaced.	Raised hook on overhead crane can be no more than 5390 mm ARL the Infraco to propose Stand for storage	M	Use in Depot building only	T	T	T	T	T	Tramco to propose
	2.14	Windscreen/window removal equipment	For use in replacing tram windscreens and side windows	Mobile stand capable to being used to access both windscreen and side windows Electrically powered vacuum beam with	M	Use in Depot building only	T	T	T	T	T	1

	No	Description	Function	Features	Fixed/Mobile/ Portable	Location used	Supplier	User	Maintainer	Access Control	Cleaned	Quantity
				suckers adapted to windscreen design Audio/visual alarm in the event of suction loss								
	2.15	Re-railing equipment	For use in rerailing trams out on the System	Variety of jacks/beams/slides to be proposed by the Infraco Airbags Slew locking devices Capable of being readily transported on the road/rail vehicle	M	Used any where on system including Tramstops	T	T	T	T	T	1 set
	2.15	Stop boards	To indicate the presence of equipment/personnel/tram	The Infraco to propose requirements. Infraco	P	Throughout System	I	T/I	I	T/I	Us er	≥20

	No	Description	Function	Features	Fixed/Mobile/ Portable	Location used	Supplier	User	Maintainer	Access Control	Cleaned	Quantity
			s on the tracks	to develop integrated solution								
3		Workshop & Stores Furniture										
	3.1	Shelving and racking	Storage of spares and other material	Heavy duty The Infraco to propose requirements. The Infraco to develop integrated solution	F	Stores	I	T/I	I	T/I	Us er	The Infraco to propose
	3.2	Tram staging	for Tram inspections/repairs	The Infraco to propose any additional staging required	M	Used within Depot building	T	T	T	T	T	The Infraco to propose
	3.3	General staging	For infrastructure inspections/repairs	The Infraco to propose any additional staging	M	Across Edinburgh Tram	I	I	I	I	I	The Infraco to propose

	No	Description	Function	Features	Fixed/Mobile/ Portable	Location used	Supplier	User	Maintainer	Access Control	Cleaned	Quantity
				required		Network						
	3.4	Shelving	Storage of minor items/documents	The Infraco to propose requirements. The Infraco to develop integrated solution	F	Throughout workshops	I	T/I	I	T/I	Us er	The Infraco to propose
	3.5	Workbenches	Equipment maintenance	The Infraco to propose requirements. The Infraco to develop integrated solution	F	Throughout workshops	I	T/I	I	T/I	Us er	The Infraco to propose
	3.6	Cupboards	Storage of minor items/documents	The Infraco to propose requirements. The Infraco to develop integrated solution	F	Throughout workshops	I	T/I	I	T/I	Us er	The Infraco to propose

	No	Description	Function	Features	Fixed/Mobile/ Portable	Location used	Supplier	User	Maintainer	Access Control	Cleaned	Quantity
	3.7	COSHH cupboard	Storage of COSHH items	The Infraco to propose requirements. The Infraco to develop integrated solution	F	Dirty workshop	I	T/I	I	T/I	use r	The Infraco to propose
	3.8	Workshop stools	Personnel comfort when working	The Infraco to propose requirements. The Infraco to develop integrated solution	F	Throughout workshops	I	T/I	I	T/I	Us er	The Infraco to propose
4		Fixed Plant										
	4.1	Air conditioning maintenance equipment	Specialist tools for filling/emptying refrigerant	The Infraco to propose	F	Anywhere in Depot building	T/I	T/I	T/I	T/I	T/I	The Infraco to propose
	4.2	Tyre replacement equipment	Specialist tools for tyre splitting/removal/balancing /bearing replacement	The Infraco to propose	F	Dirty workshop	T	T	T	T	T	1

	No	Description	Function	Features	Fixed/Mobile/ Portable	Location used	Supplier	User	Maintainer	Access Control	Cleaned	Quantity
	4.3	Underfloor wheel lathe	In-situ reprofiling of Tram tyres	Capable of producing a range of wheel profiles. Tolerances to be agreed between the Infraco Swarf conveyed to skip for removal by means of forklift truck capable of turning all wheels on one Tram within eight hour shift	F	Within Depot building.	I	T	T	T	T	1
	4.4	Sand Plant	Refilling of Tram sanding equipment	Minimum silo capacity 30 tonnes Capable of receiving sand delivery directly from road vehicle Allows Tram driver to	F	Dedicated facility	T	O	O	O	I	1

	No	Description	Function	Features	Fixed/Mobile/ Portable	Location used	Supplier	User	Maintainer	Access Control	Cleaned	Quantity
				fill an empty tram within 5 minutes Rate of fill to be sustainable for 30 minutes. In no circumstances shall the interval between the filling of two Trams exceed 10 minutes The physical condition of the sand shall not deteriorate when stored Sand deliveries to a Tram shall stop automatically when								

	No	Description	Function	Features	Fixed/Mobile/ Portable	Location used	Supplier	User	Maintainer	Access Control	Cleaned	Quantity
				the tram sand box is full Sand filling nozzles to be compatible with the sand filling inlets on the trams Signal interlocking to inhibit the movement of a tram if the sand filling nozzles are not returned to their correct storage position.								
	4.5	Machine tools	General machine tools required for maintenance	The Infraco to propose requirements. The Infraco to develop	F	Dirty workshop	I	T/I	T/I	T/I	User	The Infraco to propose

	No	Description	Function	Features	Fixed/Mobile/ Portable	Location used	Supplier	User	Maintainer	Access Control	Cleaned	Quantity
				integrated solution								
	4.6	Paint booth	Respraying of removable Tram panels	For use with water based paints integrated compressor	F	Outside workshop	T	T/I	T/I	T	Us er	1
	4.7	Pantograph maintenance & load test jig	to calibrates and align tram pantograph off Tram roof	The Infraco to propose	F	Throughout workshops	T	T	T	T	T	1
	4.8	Suspension setting equipment	To allow suspension to be set/shimmed without using tram lift	The Infraco to propose	M	Throughout workshops	T	T	T	T	T	1
	4.9	Diesel generator	Back up power source	Capable of connection to the depot LV switchboard and other plant requiring an external	M	Across network	*	I	I	I		*To be rented by the Operator if and when required.

	No	Description	Function	Features	Fixed/Mobile/ Portable	Location used	Supplier	User	Maintainer	Access Control	Cleaned	Quantity
				energy source. Capable of providing at least three day continuous operation.								
5		Hand & Mobile Tools										
	5.1	Infrastructure tools	Hand tools	The Infraco to propose	P	Across ETN	I	I	I	I	I	The Infraco to propose
	5.2	Tram tools	Hand tools	The Infraco to propose	P	Across ETN	T	T	T	T	T	Tramco to propose
6		Welding Shop Equipment										
	6.1	Ferrous welding equipment	General infrastructure repairs	The Infraco to propose requirements. Infraco to develop integrated solution	F	Dirty workshop	I	T/I	I	T/I	Us er	The Infraco to propose

	No	Description	Function	Features	Fixed/Mobile/ Portable	Location used	Supplier	User	Maintainer	Access Control	Cleaned	Quantity
	6.2	Aluminium welding equipment	Specialist Tram and Tram shelter repairs	The Infraco to propose requirements. The Infraco to develop integrated solution	F	Dirty workshop	I	T/I	I	T/I	User	The Infraco to propose
7		Battery Shop Equipment										
	7.1	Tram battery charger	To recharge Tram Batteries	The Infraco to propose	P	Battery room	T	T	T	T	T	The Infraco to propose
	7.2	Infrastructure battery chargers	To recharge various batteries used in power supply, control and comms equipment	The Infraco to propose and develop solution compatible with tram battery charger	P	Battery room	I	T	T	T	T	The Infraco to propose
8		Instrumentation and Test Equipment										

	No	Description	Function	Features	Fixed/Mobile/ Portable	Location used	Supplier	User	Maintainer	Access Control	Cleaned	Quantity
	8.1	Tram test equipment	To allow testing of measurement and testing of tram equipment	The Infraco to propose. Note any overlap with "Special Tools" to be highlighted. As a minimum, proposal to include; headlight tester, tools to allow event recorder to be downloaded and interrogated, tools to allow CCTV systems to be downloaded and interrogated, tools to allow PA and PID announcements to be re-configured.	M/P	The Infraco to propose	T	T	T	T	T	The Infraco to propose

	No	Description	Function	Features	Fixed/Mobile/ Portable	Location used	Supplier	User	Maintainer	Access Control	Cleaned	Quantity
	8.2	Infrastructure and Fixed systems test equipment	To allow measurement and testing of infrastructure and fixed systems	The Infraco to propose. Note any overlap with "Special Tools" to be highlighted as a minimum, proposal to include; OLE height and stagger gauge, stray current data loggers, noise measurement equipment, ride measurement equipment, point setting detection equipment, ≥3 sets of live line testing	M/P	The Infraco to propose	I	I	I	I	I	The Infraco to propose

	No	Description	Function	Features	Fixed/Mobile/ Portable	Location used	Supplier	User	Maintainer	Access Control	Cleaned	Quantity
				equipment								
9		Infrastructure Maintenance Equipment										
	9.1	Portable P&C grinders	To dress points and crossings	The Infraco to propose	M	On Site	I	I	I	I	I	1 set
	9.2	Track welding equipment	to build up profiles/replace sections of track	The Infraco to propose	M	On Site	I	I	I	I	I	1 set
	9.3	Portable tamping equipment	To build up track ballast to realign track	The Infraco to propose	M	On Site	I	I	I	I	I	1 set
	9.3	Portable lighting equipment	To illuminate work/collision sites	The Infraco to propose	M	On Site	I	I	I	I	I	1 set
	9.4	Portable generators	To power site tools/lights	The Infraco to	P	On Site	I	I	I	I	I	2

	No	Description	Function	Features	Fixed/Mobile/ Portable	Location used	Supplier	User	Maintainer	Access Control	Cleaned	Quantity
				propose								
	9.5	Track measuring Equipment	To allow track line and levels to be measured	The Infraco to propose	P	On site	I	I	I	I	I	1 set
10		Road Vehicles										
	10.1	Road - rail vehicle	To move about the system carrying mobile equipment and personnel	Able to operate on UK roads Able to operate on all parts of the ETN To be equipped with demountable ≥2 man-basket to enable OLE inspection throughout the ETN Capable of towing a tram including ability to apply tram brakes from cab of road-rail	M	Mobile throughout ETN and road network	I	I	I	I	I	1

	No	Description	Function	Features	Fixed/Mobile/ Portable	Location used	Supplier	User	Maintainer	Access Control	Cleaned	Quantity
				vehicle Capable of having snow plough attached in both road and rail mode Crane with capacity ≥6t and a reach (reduced capacity) of at least 4m. Able to transport other equipment items as set out elsewhere in this list Able to transport ≥3 personnel in cab Payload capability ≥10t								

	No	Description	Function	Features	Fixed/Mobile/ Portable	Location used	Supplier	User	Maintainer	Access Control	Cleaned	Quantity
				This will make it a requirement that the driver has a LGV driving license. Powered winch with ≥8t pulling capacity								
	10.2	Other road vehicles	Miscellaneous vehicles to be proposed by Infraco	The Infraco to propose	M	Throughout road network	I	I	I	I	I	The Infraco to propose
	10.3	Road/rail trailer	Trailer with large man lift for OLE inspection/repairs	Capable of being towed to site by	M	Throughout road	I	I	I	I	I	1

	No	Description	Function	Features	Fixed/Mobile/ Portable	Location used	Supplier	User	Maintainer	Access Control	Cleaned	Quantity
				road/rail vehicle or truck		network						

29.15 Overhead Line Equipment

The Depot tracks shall be equipped with overhead line equipment. This will be in compliance with the Employer's Requirements for Overhead Line Equipment in Section 31.

Electrical and safety interlocking with the craneage and other plant and equipment shall be provided.

29.16 Depot Substation Buildings and Associated External Works

The requirements for the Depot substation building and associated external works are as follows:

- The Depot sub-station requirements and facilities shall accommodate the needs of the traction power loads within the Depot and to service the adjacent sections of main line, the Depot domestic supplies and the requirements of the Distribution Network Operator.

- A separate 11kV/400V LV transformer and distribution switchgear shall be accommodated fed from the main 11kV supply located in the Depot substation.

- The depot LV switchboard shall be capable of being energised from an external / mobile generator via socket and plug with an interlocked isolator. This shall provide 400 V ac supplies to essential services within the Depot complex.

- Provision shall be made for the switchboard generator apron and clear access to the connection point.

29.17 Depot Systems

29.17.1 Electrical Supplies

The power supply to the traction sub-station is described in Section 30 (Traction Power) of these Employer's Requirements.

Scope

The requirements on the Infraco shall include but not be limited to:

- Main (11kV) power transformer and LV switchboard;
- Sub-mains distribution and main equipment;
- Small power distribution;
- Power supply to mechanical plant and controls;
- Back-up supplies (fixed standby generator);
- Uninterruptible power supplies;
- Data distribution and information technology systems supplies (including operations IT systems);
- Fire protection system supplies;
- Power supplies to CCTV, security and access control systems supplies;
- Power supplies to lighting – internal and external, emergency lighting supplies;
- Cable containment;
- Lightning protection and Depot equipment earthing; and
- Commissioning of systems and training.

Auxiliary Power Supplies

Auxiliary supplies shall be provided with a suitably sized uninterruptible power supply. The uninterruptible power supply room shall be provided with cooling in order to maintain battery life (along with ventilation to offset hydrogen build-up if required).

110 Volt Power Supplies

Appropriate networks of 110 V shall be provided:

- 110 V power shall be distributed within the stabling area;
- 230 V/110 V transformers shall provide 110 V supplies throughout the workshops, the main LV switchroom, the plantroom, the wash plant and the sand filling plant.

Control Centre

Electrical supplies shall be configured such that in the event of a single failure there shall be no loss of data and no requirement for excessive actions on the part of the Control Centre staff.

A dual supply changeover arrangement, with high integrity circuit breakers is preferred to a single large uninterrupted power supply. The power changeover function shall not in itself cause the failure of any system so powered, the loss of information or an interruption to the availability to any sub-system for more than 20 seconds.

- Two, suitably sized uninterrupted power supplies shall be connected in parallel and supplied from the Depot substation to provide supplies to critical loads, i.e. Control Centre and equipment room supplies;
- The equipment room electrical systems to provide heating, ventilation, air conditioning, lighting, power and other building services to provide effective habitation for the centralised terminals of all sub systems deployed upon the Edinburgh Tram Network and the human/computer interfaces thereof shall be provided; and
- Lighting to equipment room shall be provided in accordance to CIBSE Codes. Emergency lighting within equipment room shall be at least 50% of normal to allow operations to be carried out even during mains failure.

An appropriate means of facilitating uninterrupted data and voice communication between the equipment room and Control Centre shall be provided for those sub-systems that are present at the operator workplaces, mimic diagrams, display banks and any emergency override facilities. Dedicated containment (and riser, depending on the room's orientation) for cabling between the two rooms shall be provided.

29.17.2 Specific Sub-System Technical Requirements

Access Control

A complete access control system shall be provided to relevant standards with a clearly defined access control strategy.

Controlled entry for pedestrians, Trams and road vehicles shall be provided with appropriate access control for each. Access control shall be switchable between a reception area (for daytime use) and the Control Centre. The Depot road entrance shall have two separate vehicle gates for entry and exit, and additionally a pedestrian gate on the footway. The vehicle gate shall be capable of being opened, and the pedestrian gate released, from either the Control Centre or the Depot reception, or by a member of staff presenting a security card to a reader at the gate.

The vehicle gate shall re-close once a vehicle has passed through. The pedestrian gate shall close automatically and re-lock when it closes. The vehicle exit gate shall open automatically when a vehicle approaches it from within the Depot.

Tram entry / exit locations shall be provided with manual gates, which shall normally be left open. At these gateways, there shall be a microwave or equivalent detector, which shall sound a single brief distinct audible warning in the Control Centre whenever the beam is interrupted by a person or larger object.

Intercoms shall be provided from each of the two entry gates (pedestrian and vehicle) to reception and Control Centre. There shall be two intercom positions on the same pole, one at convenient height for car drivers and one for heavy goods vehicle drivers, who shall be able to use them whilst in the driving seats of their vehicles. here shall be one security card reader at the lower position and one with the intercom at the pedestrian gate. Any equipment in centre of the road shall be removable if required to allow tram movement by road if designed to be through the same access. An intercom system shall operate in line with the access control system.

IT Systems

IT Systems including network cabling containment throughout the Depot building for the independent supply of IT systems shall be provided in accordance with Good Industry Practice.

- Data cabling shall be provided to appropriate standards;
- All equipment finishes shall be appropriate to area and type of use within the Depot building and shall be in materials with a long life in an environment that is in continuous use;
- All accessories used shall be from approved suppliers/manufacturers. Lifespan of finishes / accessories shall be verified with relevant supplier. Correctly (IP) rated items shall be installed as appropriate to the environment; and
- All materials used shall comply with their appropriate standards. Where necessary, finishes / accessories to carry the appropriate 'test pass' mark.

Data collection facilities shall be provided for the management of information provided by all relevant equipment including the underfloor wheel lathe, SCADA, wash plant etc.

Adequate data points shall be provided to enable data collection facilities to be connected.

Lighting

Natural light in offices shall be maximised and all rooms shall be placed within the building in locations appropriate to their function.

Office lighting shall be to CIBSE document 'Lighting Guide 7: Office Lighting'. The document encourages the maximum use of daylight in offices. Use of lighting controls (i.e. daylight sensing, presence detection) shall also be provided, hence saving energy by utilising daylight wherever and whenever possible.

Lighting in main workshop and other areas shall be placed such that light is given where required for work to take place, including when Trams are present. Each lighting element shall also be safely accessible for maintenance during the continuous operating hours with the OLE over one Tram berth isolated.

- Lighting shall be provided so as to provide the required lighting levels (to CIBSE Guides) even when Trams are occupying the workshop. Task lighting shall be provided by luminaires placed close to the task, also supported by portable lamps connected to local supplies;

- Appropriate switching and control strategies shall be implemented; and

- Verification of lighting levels shall be supported by lighting calculations and also by taking post-installation light meter readings.

29.17.3 Workshop Doors

Workshop Tram access doors shall be bi-parting, bi-folding with clear panels for through visibility. The doors shall be power-operated with push-button controls both inside and outside. The open and close button shall be press and hold whilst the door moves, rather than press and walk away to ensure door does not open or close onto an obstruction or person.

- A top-hung door with a bottom track shall be provided and allowed for when sizing the electric motor;

- The actuating mechanism shall be such that it can be maintained without the need to isolate the overhead line equipment;

- In the event of power or door operating equipment failure, it shall be possible for one person to operate the doors manually from ground level;

- The doors shall be provided with a suitably located insulated aperture to accommodate the live overhead line;

- Overdoor heaters, if proposed, shall operate only when doors open via interlinks and integral thermostats.

Door leaves shall be bonded to earth so that should they inadvertently come into contact with the overhead line equipment, the fault resistance shall be sufficiently low to ensure immediate circuit breaker trip without damage to doors or equipment.

29.17.4 Hazardous Material Storage

Facilities for the storage of hazardous materials and road access for their delivery and off loading shall be provided.

29.18 Equipment Room

29.18.1 Fire Alarms / Fire Extinguishing System

The equipment room shall have a means of locally activating the fire alarm via a wall-mounted panel.

The equipment room shall be fitted with smoke and temperature alarms.

The equipment room shall also be fitted with an automatic and manually operated extinguishing system, which shall not damage the equipment when activated. The extinguishing system chosen shall be designed subject to a risk assessment based on criticality etc.

In the event of the loss of the primary power supply, the alarm system shall function for a minimum of six hours. This system shall be integrated with the durations and functionality of all other UPS systems.

29.18.2 Heating and Ventilation

The equipment room shall be environmentally controlled to minimise the effects of room heating due to equipment dissipation.

The heat exchanger vents shall not be positioned over the work area of the maintainers nor directly above equipment cubicles, and shall be placed in position to minimise localised chilling effects.

The room shall be positively ventilated to prevent dust ingress.

All equipment fitted with fans shall ensure that fan failure shall not compromise system functionality.

29.18.3 Lighting

Lighting within the equipment room shall be either incandescent or fluorescent type fittings.

In the event of power failure, emergency lighting shall be fitted which shall operate for four hours and maintain the level of illumination in the room.

The lighting shall be positioned to illuminate the front and rear of the equipment cubicles, but not directly above equipment cubicles.

29.18.4 Cable / Conduit Entry

Cable routing shall be primarily through floor-recessed conduit.

The main cable entry / exit shall be via an aperture located in the floor, which provides entry or access for cables external to the Depot.

Cable access shall be through the equipment room ceiling.

Particular care shall be taken to ensure that electro-magnetic compatibility is not degraded when cables are closely located.

Cables shall be continuously screened through the wall / floor / ceiling apertures.

Appropriate strain relief or clamping shall be provided.

All cables and conduits shall be clearly marked with cable identifiers or suitable permanent marking which shall last for the expected lifespan of the cable or conduit.

29.18.5 Architectural Requirements

Equipment shall be laid out in the equipment room to afford easy accessibility.

Cubicle doors, when opened shall not impinge on access.

Appropriate 'safe' walkways shall be clearly identified on the floor of the room.

Equipment shall be placed such that cabling runs are minimised.

Antenna, low signal or high frequency cable runs shall be minimised and the equipment positioning optimised to ensure a majority of these runs are compliant.

The equipment room floor shall be sealed to minimise dust ingress into the equipment and the surface shall ensure that no static build-up occurs.

29.18.6 Security Requirements

In the event of security and access control system failure, this shall be logged accordingly and displayed to the Control Centre staff.

29.18.7 Equipment Room Furniture

The equipment room shall be furnished with modern ergonomic furniture to assist the maintainers and reduce fatigue.

There shall be two maintainer's desk positions in the room.

The design of the equipment room furniture shall include provision for the effective management of cabling, and equipment and maintenance power supply distribution.

Each desk position shall have personal storage of a minimum of three lockable drawers.

Positioning of storage shall not inhibit the work-envelope of the maintainer.

Additional tool storage locations shall be located in appropriate areas of the equipment room

29.19 Mechanical and Public Health

29.19.1 General

The mechanical and public health services works to be provided shall include the main Depot, and comprise heating, fresh air ventilation, toilet accommodation extract ventilation, specialist extract ventilation, comfort cooling systems, control systems, incoming natural gas supplies and distribution, fire alarm systems, fire suppression system, incoming mains water supplies, domestic hot water generation, domestic hot and mains water distribution, rainwater collection, waste and soil pipework systems, and underground surface water and foul drainage immediately local to the main Depot (connecting into main services systems).

29.19.2 Water

Cold water shall be provided to each stabling road.

Mains water shall be supplied to areas such as the vehicle workshop (and other special purpose workshops), plant room and wash plant. Backflow prevention devices shall be employed.

Domestic hot water shall be centrally generated and stored. The calorifiers and circulation plant shall be housed in the appropriate plant room.

29.19.3 Air Conditioning

Air conditioning shall be provided in the Control Centre, and all administration areas.

A 'free-cooling' system shall be provided for the equipment room.

Duplicate cooling systems, each capable of 100% duty, shall be installed to serve the Control Centre and equipment room.

29.19.4 Ventilation

Dedicated extractor systems shall be provided to suit specific items of equipment (i.e., lathes, paint spraying booths. vehicle battery charging and uninterrupted power supply system).

29.19.5 Drainage Pad

A drainage pad shall be provided adjacent to the pressure washer with a water and power supply for a pressure washer.

Treatment of wastewater to meet appropriate standards prior to connecting to site drainage system shall be provided.

29.19.6 Mechanical Systems

The systems shall be configured such that in the event of a single failure there shall be no loss of data and no requirement for excessive actions on the part of the Control Centre staff.

All centralised mechanical services plant shall be located in the plant room with sufficient space allocation for maintenance and / or plant removal. The only exception to this may be the heat rejection plant necessary for the air conditioning/comfort cooling installations, which are likely to located externally. Should equipment be required to be located externally the impact on the overall visual appearance of the Depot shall be considered.

30 Traction Power

The scope of this Section of the Employer's Requirements is to define the traction power (substations) requirements applicable to the Edinburgh Tram Network which the Infraco must comply with.

30.1 General Requirements

The provision of traction power shall be derived from a number of suitably located traction substations distributed around the Edinburgh Tram Network.

Each Edinburgh tram traction power substation shall include:

- The traction substation enclosure;
- The associated Scottish Power HV (11 kV) three-phase power supplies with associated HV switchboard, metering and local emergency tripping facility;
- 230V LV services with associated metering and distribution equipment for substation services i.e. lighting, small power etc;
- Traction substation transformer-rectifier/s and equipment;
- Traction dc switchboards;
- Feeder and bypass isolators;
- Substation earthing;
- Negative busbars;
- Batteries / charger;
- SCADA interface marshalling panels or agreed equivalent;
- Associated internal power and control cabling; and
- Miscellaneous items to complete.

Substations shall be containerised at all locations where this is practicable.

Provision shall also be made for a 11 kV supply to the Depot services transformer.

30.2 Traction Substations

30.2.1 General

A sufficient number of traction substations (including a separate substation for the Depot) shall be provided, as described later in this Section 30.

The equipment to be provided for each of the eight traction substations for Phase 1a shall comprise:

- Appropriate HV supply arrangements from a Scottish Power circuit breaker (as part of their HV switchboard to be located in a separate section of the substation building);
- A single indoor transformer-rectifier unit;
- A 750 V dc switchboard with direct acting overload protection, impedance protection, earth fault protection and transfer tripping;
- A negative busbar cubicle;
- A tripping and closing battery and charger; and
- All associated internal power and control cabling, and earthing.

The layout and disposition of all equipment contained within all substations shall be identical where this is practical.

Separate personnel access shall be provided to the compartment housing LV control, protection and instrumentation equipment and associated multicore cabling terminations. This compartment shall be fully segregated from the HV / traction voltage compartments by means of a cage or similar. An access door shall be provided between the two compartments, with a locking system that is to be agreed with **tie**.

Two track feeder isolators with earthing function and a motorised bypass isolator shall be provided.

At all substations, control and indication information shall be provided to SCADA by suitable remote communication interface.

30.2.2 Russell Road Track Paralleling Hut (applicable to Phase 1b only)

Consideration shall be given to the provision of a Russell Road track paralleling hut, which shall be provided with similar equipment as all other substations, however an HV supply from Scottish Power will not be provided and the substation shall be used as a track paralleling hut in the first instance.

The design shall consider the future detailed provision for the installation of such an HV Supply, in configuration of the substation which shall be identical, as far as practicable, to all other substations to be provided within the Edinburgh Tram Network.

Cable ducts into the building shall be provided to enable the future installation of a HV Supply with the minimum of disturbance to the ongoing operation of the location.

30.2.3 Gogar Depot Substation

The equipment at the Depot traction and services substation shall comprise three HV supply cables from three Scottish Power circuit breakers, or ring main units feeding two indoor transformer-rectifier units for depot stabling traction and main line traction, and the other to the services transformer in the Depot building.

One four-panel 750V dc switchboard with direct acting overcurrent protection, relay overcurrent protection, thermal image, earth fault protection on three (two for the yard and one for the workshop) track feeder circuit breakers and direct acting reverse current protection on the rectifier circuit breaker. (Alternatively, a fused rectifier may be used, whereby no direct acting reverse current protection on the rectifier circuit breaker is needed at all. An isolator may be offered in place of a rectifier circuit breaker. If the fused rectifier option is chosen, then this will be fed from one rectifier transformer; a three panel 750V dc switchboard feeds the main line in the usual way as described above.

The whole of the Depot yard shall be earthed on the negative side including the workshop traction supplies.

The enclosure of the yard and workshop circuit breaker shall be solidly earthed, and also connected to the rectifier negative pole.

Two negative busbar cubicles (one for the yard rectifier and the other for the main line rectifier), a tripping and closing battery and charger, all associated internal power and control cabling, and earthing shall be provided.

In an annex segregated from the main enclosure for fire detection, two motorised track feeder isolators with motorised earthing function and a motorised load break bypass isolator with over-current detection and tripping relay shall be provided.

30.3 System Protection Settings

As well as complying with the **tie** requirements for as built documentation, all calculations used to determine protection settings shall be provided by the Infraco in a format allowing complete checking of methodology results without any additional sources of information.

30.4 Power System Design Principles

The 11 kV feeds to each traction substation shall be derived from and form part of the local Distribution Network Providers (Scottish Power) Network ring with a dedicated ring main unit or switchboard feeding the Edinburgh Tram Network the traction substation.

HV switchgear shall be provided to meet the requirements of the DNO (Scottish Power).

The 750 V dc traction power system shall provide a very high degree of reliability. Thus, small single-rectifier, substations shall be provided at close spacing, arranged to feed the 'in' and 'out' lines in permanent cross-connection between substations.

The OLE feeding shall be arranged so that the use of locally operated manual feeder isolators can facilitate the remote isolation and earthing of the overhead line; alternative solutions may also be offered.

Each traction substation shall also be configured so it can be isolated from the main line and bypassed without an impact on the Tram service.

The auxiliary switches of the bypass isolator shall, on the bypass isolator closing, re-configure the hard wire inter-tripping pilots to bypass the isolated substation. In the event of a fault, the over-current relay of the bypass isolator shall trip the feeding circuit breakers at both ends of the extended section, and give SCADA indication of the direction in which the fault current flow was detected. Other procedures for indication of fault location may also be offered.

Equipment located within the substations and the remote motorised isolators, including the earthing function, shall be controlled and monitored over the SCADA system.

11 kV supplies at the Depot and control centre will be taken from two 11 kV Scottish Power feeders, via a Scottish Power switchboard affording three 11 kV feeds to the Edinburgh Tram Network.

One feed shall supply the traction transformer-rectifier for the Depot yard, workshop and stabling area roads that have the track solidly earthed.

The second feed shall supply the traction transformer-rectifier for a normal main line feeding configuration.

The third feed shall supply the transformer, adequately-sized for the Depot and control centre LV ac services.

Maximum use of the standard traction transformer rectifier unit shall be achieved for the System by providing a high degree of reliability. This will be afforded by deriving traction supplies from two separate Scottish Power feeders at each substation.

In the particular case of the Depot, in the event of loss of the 400 V ac supply, essential equipment (principally the Control Centre) shall continue to function on UPS supplies and from a separate generator (see Section 29 (Depot) of these Employer's Requirements).

The 11 kV incoming supply to all traction substations shall be able to be individually tripped by the system controller located in the Control Centre via SCADA, and by staff locally by means of a dedicated 11kV trip push button to be located in each substation lobby.

The OLE shall also be able to be tripped in either direction by the system controller from the Control Centre via SCADA.

The OLE shall be able to be tripped in both directions simultaneously via a hard wire emergency mass trip button to be located in the Control Centre that shall trip all substations in the designed groups.

The OLE shall be able to be tripped locally in both directions simultaneously by means of an emergency push button located in each substation lobby.

The substations are named, referenced and located as shown below:

Table 84 - Substation Abbreviations

Substations	Nomenclature
Phase 1a	
Leith Sands Substation	LSE

Leith Walk Substation	LWE
Cathedral Substation	CAE
Haymarket Terrace Substation	HTE
Jenner's Depository Substation	JDE
Bankhead Drive Substation	BDE
Gogar Depot Substation	GDE
Ingliston Park and Ride Substation	IPE
Phase 1b	
Craigleith Substation	CGE
Granton Mains East Substation	GME
Granton Road Substation	GRE

The 750 V dc feeder circuit breakers at each substation shall be arranged to feed the OLE locally through manual feeder isolator / earth switches located in their own compartment of the traction substation. Motorised load break bypass isolators shall be provided in these compartments or at suitable location to link adjacent OLE sections in an emergency.

Intermediate sub-sectioning points shall be provided, comprising section isolators in trackside pillars (depot: pole mounted will be acceptable) to give operational flexibility during emergencies. With the exception of 'tail end' feeds, most sections of OLE shall be double end fed, and provided as second level protection with transfer tripping through private pilot cables.

30.5 Scottish Power Interface (DNO)

All Scottish Power 11 kV supplies connections, together with all associated protection, emergency tripping and tariff metering equipment shall be procured by the Infraco.

The provision of a separate Scottish Power LV supply connection for lighting and auxiliary services within the traction substation buildings, excluding the depot traction substation shall be procured by the Infraco.

The ratings and protection of the Scottish Power supplies shall be suitably co-ordinated with the characteristics of the power conversion equipment.

SCADA indications shall be made available and SCADA cable tails shall be provided for Scottish Power to wire into their equipment. A maximum number of up to 5 in-/output connections are to be considered as sufficient.

30.6 Multicore and Control Cabling

All necessary multicore and control cables within the substation, and LV ac supplies to the substation equipment, shall be provided.

Each substation LV ac supply shall be drawn from a suitably rated LV ac consumer unit.

The provision and installation of all the necessary intertripping pilot cables to and from the dc switchgear located within each substation shall be included.

Cables for all LV ac and LV dc protection, control, alarm and indications shall have copper conductor with XLPE or PVC insulation and an overall PVC oversheath and galvanized steel wire armour where cables are to be installed without armoured conduit or trunking or other adequate mechanical protection.

The conductors shall be plain annealed copper wire complying with BS EN 60447 – 2007 as applicable or equivalent and all cores shall be clearly identified by printed numbers at regular intervals.

The minimum conductor size shall be not less than seven strands of 0.67 mm diameter wire, or in the case of single wire conductors the minimum cross-sectional area shall be not normally be less than 2.5 mm^2. In special cases for light current installations single strand, annealed copper conductors with a cross-section of 1.5 mm^2 may be used but only with the specific written approval of **tie**.

All cable sheaths shall be free from defects and impervious to water.

Multicore and control cables shall be terminated in accordance with the manufacturer's recommendations and the cable cores shall be left long enough to be terminated without the addition of separate tails.

All detail diagrams shall be cross-referenced and shall show multicore cable schedule reference numbers to facilitate cable identification.

30.7 Transformer Rectifiers

30.7.1 General Arrangement

Each unit shall consist of a dry type, Class F AN cooled transformer to BS EN 60726. Each unit shall be suitable for environmental conditions E1 and ambient temperatures C1. The rectifier shall

comprise silicon diodes mounted on heat sinks, the whole to BS EN 60146, and cooled by natural circulation of air, enclosed in a cubicle with a rigidly constructed fabricated steel framework. The steel framework shall be completely clad in sheet steel to the extent as shall be consistent, by the provision of screened openings, with the requirements of natural cooling and ability to assess readily by direct vision from outside the cubicle any unhealthy condition of the major internally mounted components. Drip-proof top covers shall be fitted. The outer surfaces of the cubicles shall be Grey Shade 631 Semi Gloss to BS 381C 1996 or similar, e.g. RAL 7047. Adequate ventilation provision shall be made in the substation buildings without jeopardising the security of the building to ensure the equipment is able to perform correctly.

Alternatively, a separate close-coupled transformer cubicle may be offered. Substation floor area shall be considered at a premium, so an important consideration is compactness of layout without jeopardising operating and maintenance requirements.

All equipment shall comply with the requirements of BS EN 60076 and BS EN 60146, and the degree of enclosure shall be IP31 of BS EN 60529.

30.7.2 Rating

The rating of the transformer-rectifiers shall be declared as the 100 per cent continuous rated output at 750 V dc on all transformer tappings. Each combined unit shall have an overload rating according to the rating class of BS EN 60146 stated in the Schedules. The impulse voltage withstand rating shall be 75 kV for the nominal system voltage of 11 kV.

30.7.3 Voltage Regulation

The overall voltage regulation of each combined transformer - rectifier shall be 5 per cent with a tolerance of ±5 per cent of the regulation from 5 to 100 per cent rated load.

30.7.4 Voltage Ratio & Connections

The HV primary winding shall be delta connected, and two secondary windings, one star and one delta, arranged for series bridge rectifier operation in accordance with circuit diagram 12 of BS EN 60146 to produce 750 V dc at 100 per cent rated load and nominal tapping.

30.7.5 Voltage & Phase Tapping

Tappings shall be provided on the HV windings in order to make an off-circuit HV voltage selection, by means of bolted links.

30.7.6 Transformer Cores

The cores shall be built up of cold rolled grain oriented silicon steel sheets in accordance with the guaranteed maximum total loss stated in BS EN 10107. When a transformer is connected on the nominal tapping, and operating at rated voltage and frequency, the flux density at any point in the magnetic circuit shall not exceed 1.6 Tesla.

The magnetic circuit shall be insulated from all structural parts and be capable of withstanding a test voltage to the frame of 2 kV rms for one minute. A link shall be provided for earthing the magnetic circuit to the enclosure.

30.7.7 Performance Under External Short Circuit

The performance of the rectifier transformer under external short circuit conditions shall be in accordance with BS EN 60076 (BS 171 is withdrawn). In applying the values stated therein it is to be assumed that the voltage at the terminals of one side of the transformer is maintained at the full rated value for the duration of the short circuit when there is a short circuit between the phases or to earth on the other side of the transformer, or between poles on the rectifier output.

30.7.8 Losses

The no-load and load losses shall be as low as is consistent with reliability and economical use of materials.

30.7.9 HV Cable Terminations

A cable termination chamber for top or bottom entry shall be provided suitable for dry type terminations and the HV cable.

30.7.10 Diodes

The type of diode used shall have been proved in service and have an assessed reliability generally in accordance with valid and current European Standards ((actual BS 9300 seems not to standardise diodes for traction rectifiers)). A fuse-less design of diode bridge shall be provided. Alternatively fused diode bridges with monitored fuses in combination with fuse-less, but short circuit proof resistor/capacitor circuits may also be offered (refer to section30.7.11).

Each diode shall be capable of withstanding voltages having a peak value not less than 2.5 times the peak working reverse voltage rating.

Particular attention shall be paid to the method used for mounting the diodes, and it shall be possible to replace easily any individual diode without disturbing other components.

30.7.11 Surge Protection

Each rectifier shall be fitted with surge protection to ensure that the reverse voltage is shared equally across series connected diodes and bridges and that the voltage across individual diodes is limited to the peak transient reverse voltage rating of the diode.

In order to attenuate surge voltages caused by lightning strikes, pantograph arcing or similar effects, a surge protection circuit comprising two separately fused resistor/capacitor networks shall be provided. The design of the surge circuit shall be such that resonant effects with significant

harmonics present in the open circuit voltage are minimised. . Alternatively, a non-fused short-circuit proof resistor/capacitor circuit may also be offered.

Adequate protection against lightning and over-voltages, however caused shall be afforded to the substation equipment. The characteristics of all surge diverters to be used on the Edinburgh Tram Network shall be correctly co-ordinated with those of the rectifier surge circuits, so as to limit over-voltages to acceptable levels and minimise resonance effects.

30.7.12 Temperature Rise

The rectifier transformer temperature rise shall be limited to 800 K at rated output. The maximum operating temperature of any rectifier component, including busbars and connections, shall not exceed the limits permitted by BS EN 60146.

30.7.13 Protective Services

The following devices shall be provided:

- Diode heat sink and transformer winding over-temperature alarm and trip, with alarm contacts for SCADA indication and local alarm lamp indication (amber) or, alternatively, indicated on substation control & protection display;

- Surge circuit fuse failure alarm, operating for the failure of either or both circuits, with alarm contacts for SCADA indication and local alarm lamp indication (amber) or alternatively indicated on the substation control & protection display; if a non fused solution is provided (refer to Section 30.7.11 Surge Protection then no indication is required.

- A supply supervision device shall be provided to monitor the presence of the main supply to the transformer-rectifier and to give a supply failure alarm through the SCADA system; and

- An extreme inverse over-current/earth fault relay protection on the 11 kV incoming circuit for tripping the Scottish Power rectifier feeder circuit breaker, with alarm contacts for SCADA indication.

30.7.14 Instrumentation

Each rectifier shall be fitted with a shunt or dc current transducer with connection to an ammeter mounted on the front of the cubicle. Each rectifier shall be fitted with a fused voltage divider connected to a rectifier output voltmeter mounted alongside the ammeter.

The overall accuracy of the shunt / dc current transducer and ammeter, and of the voltage divider and voltmeter, shall be to Class Index 1.3.

Alternatively, this instrumentation may be located in the rectifier feeder cubicle of the DC switchgear or the values may be shown on substation control & protection displays.

All 750 V dc connections, relays and instruments and any stray current monitoring instruments shall be capable of withstanding the test voltage stipulated in BS EN 50124-1 2001.

30.7.15 Negative Isolation

The negative connection from each rectifier shall include a disconnection facility by means of an isolator, either as part of the rectifier or part of the negative busbar cubicle.

30.8 A.C. HV Switchgear

Provision is to be made for a 'Scottish Power' emergency trip facility (located in each substation lobby) to allow mobile tramway staff, who may not be authorised for access to the traction substations, to trip the Scottish Power in-feed to a substation in the event of a failure of the SCADA system.

30.9 D.C. Traction Supply Switchgear

30.9.1 General

The switchgear shall be of the high-speed air break type in accordance with BS EN 50123-2, suitable for use on a 750 V dc traction overhead line system, with floating track negative return circuit.

Circuit breakers shall be of the carriage-mounted 'withdrawable' type, within cubicles.

The switchboard shall comply with BS EN 50123 Part 6 and be capable of sustaining without damage, the electrical and mechanical stresses produced by fault conditions up to the prospective system short circuit rating.

The entire switchboard enclosure shall be insulated from earth and there shall be no inadvertent earthing of the switchboard other than via the main earth bar passing through the low impedance earth fault sensor.

Each cubicle shall be of rigid folded sheet steel construction suitable for all normal and fault conditions, and withstand repeatedly without distortion or failure, shocks caused by closing and opening impacts. Enclosures shall have a degree of protection to IP 31.

Removal of covers on any cubicle to permit access to components shall not cause exposure of live conductors in the adjacent cubicles.

The design of the cubicles shall ensure complete dispersion of ionised effluent from the circuit breaker to atmosphere without hazard to personnel or the possibility of establishing a conducting path to the switchboard frame.

The switchgear assembly shall be designed in compliance with, and have certified test reports to demonstrate compliance with clause 6.6.3 of BS EN 50123-6 1998. Front access doors to compartments with exposed metalwork connected to the primary circuit shall be insulated against arcing to the door (3 mm polycarbonate screen or equivalent) and have a fault rated flexible earth strap at the top of the door between door and cubicle frame. Hinges and door latches shall be substantial and keep engaging on door closure.

Outgoing cable boxes shall be suitably sized to accommodate the DC cables. Feeder cable boxes shall be furnished with a surge arrester coordinated with the OLE and rectifier surge protection ratings.

Other DC switchgear, proved and tested in similar applications providing same or similar functionality in compliance with relevant, current and valid European Standards may also be provided.

30.9.2 Busbars

The busbars shall be rigidly supported and fully insulated throughout their length, including tee-off connections and joints between adjacent chambers.

The busbars shall be completely enclosed in an earthed metal chamber, access to which shall be by means of bolted panels. Removal of these panels shall not give access to outgoing circuits. No small wiring or other equipment shall be mounted in busbar chambers.

Other solutions providing same or similar functionality and electrical safety may also be provided.

30.9.3 System Voltage and Fault Level

The normal system traction working voltage shall be taken as 750 V DC, with a tolerance in accordance with BS EN 50163.

The switchgear shall be capable of withstanding the electrical and mechanical stresses when clearing short circuit currents up to the maximum prospective level of the system, assuming that normal voltage will be maintained at the primary terminals of the rectifier transformer.

The switchgear shall be capable of interrupting the following currents:

- Terminal short circuits;
- Overhead line faults adjacent to a substation;
- Overhead line faults remote from substations, and including faults at the most distant point fed under the most onerous outage conditions tolerable;
- All values of traction load currents likely to be encountered in service, passing through the switchgear in either the forward or reverse direction; and
- Load currents of tramcar auxiliaries, under both starting and running conditions, passing through the switchgear in either the forward or reverse directions.

All electrical clearances in air and insulator creepage distances shall be adequate to withstand all specified steady state voltages and all transient voltages likely to arise in service.

30.9.4 Temperature Rise

Each current carrying component of the equipment supplied shall be capable of continuous operation at the specified ratings without exceeding the maximum temperature rises stated in the appropriate European Standard.

30.9.5 Circuit Breaker Isolation

Each complete circuit breaker together with its auxiliary switches and operating mechanism shall be arranged on a 'withdrawable' carriage to permit full accessibility for maintenance purposes and as a means of isolating the circuit.

Indication of circuit breaker `open/closed' status, and circuit breaker position, shall be visible through a window in the cubicle access door or by other suitable means (e.g. after opening the cubicle access door and, in addition, on substation protection and control display)..

The circuit breaker carriage shall remain within the confines of the cubicle when in the service or isolated positions.

A positive stop shall be provided to indicate when the circuit breaker has been fully moved into the service position.

Mechanical interlocks shall be provided so that it is neither possible to withdraw the circuit breaker without having first tripped the operating mechanism, nor to replace the circuit breaker if in the closed position. Means shall also be provided to enable the circuit breaker to be operated electrically or by hand when in the isolated position. A padlocking facility shall be provided on the isolating handle aperture. The main isolating contacts of the fixed portion shall be equipped with shutters arranged automatically to cover all live parts on both busbar and outgoing circuits. Provision shall be made for padlocking each individual shutter in the closed position.

Secondary isolating contacts shall be provided as necessary and arranged so that when in the isolated position all auxiliary supplies to the circuit breaker carriage are still connected.

Facilities shall also be provided so that the circuit breaker and its associated electrical auxiliary circuits can be operated electrically when the carriage is completely withdrawn from the cubicle enclosure.

The circuit breaker carriage shall be equipped with suitable wheels for movement on normal floor surfaces and also to act as guides in conjunction with suitable alignment rails, pins and sockets to ensure correct and accurate engagement of the plug and socket contacts.

Steel ramps and tracks of suitable section and robust construction shall be provided for the movement of the carriage into and out of the stationary portion of the cubicle. The arrangement shall positively and accurately align the main and secondary plugs of the carriage with the respective stationary portion plugging contacts and during all movements under service conditions maintain such alignment and earthing contact. The ramps shall be designed to permit easy movement of the carriage between cubicle and floor without shock or damage to the equipment or floor.

Plugging or scraping contacts with copper current paths shall be provided to ensure a satisfactory and positive connection of the metalwork of the circuit breaker carriage to the switchboard earth bar established in the isolated position before any 750 V connections are made.

30.9.6 Circuit Breakers

All circuit breakers shall have a continuous current rating in accordance with BS EN 50123 and BS EN 60439 where applicable, shall be identical in arrangement and fully interchangeable with each other, where appropriate. Rectifier and feeder circuit breakers shall not be interchangeable, in -case Rectifier circuit breakers are provided (in case of Fused Rectifier diodes, Rectifier disconnectors are sufficient and to be provided).

The closing circuit shall contain an anti-pumping feature which shall prevent automatic re-closure should the closing signal be retained indefinitely either by operator action or resulting from a failure on the supervisory control system. The circuit breaker shall not respond to a close signal when open and a trip signal is present.

Closing and tripping circuits shall be capable of satisfactory operation within the limits of 70 per cent (tripping of feeder circuit breaker trip coils) 80 per cent (closing) and 120 per cent, of the rated dc auxiliary supply voltage.

The 'trip' coils of the dc rectifier circuit breakers shall, if needed (see above), take the form of 'under voltage release' coils after Network Rail practice, so that loss of auxiliary voltage will cause the rectifier circuit breaker to drop out, leaving the feeder breakers closed up as a track paralleling hut (TPH).

The circuit breaker shall be capable of being closed and tripped manually in the service position while still retaining its full fault making and breaking capacity. Under such manual operation it shall be possible to disconnect the auxiliary dc supply without interfering with the operation of the breaker.

Provision shall also be made for the slow manual closing of circuit breakers when withdrawn for maintenance purposes and one device for this purpose shall be provided per switchboard. The slow closing device shall be such that the moving portion of the circuit breaker can be halted at any point in the travel, to enable checks to be made at all points of the closing stroke.

Mechanical indicators shall be provided to show whether the circuit breaker is open or closed. An operations counter shall be fitted.

Shunt tripping coils shall be wired in series with circuit breaker auxiliary contacts arranged so that the supply to these coils is automatically cut off on completion of a successful operation.

All contacts shall be easily and quickly replaceable.

The arc chutes shall be so arranged that any emission of flame, hot gases or metal particles during operation of the circuit breaker will be contained within the cubicle and not cause damage. Arc-chutes shall be designed for convenient handling and removal during inspection and maintenance.

The design of the arc control chutes shall be such that erosion caused by the arc and emission of ionised effluent during operation of the circuit breaker is minimal. The materials used in them shall be non-hygroscopic.

Each circuit breaker carriage shall be fitted with a label holder and an easily removable blank white sandwich plastic label.

The front and rear of each cubicle shall display a prominent label showing the circuit identification by name and approved reference number.

30.9.7 Interlocks

A system of mechanical or electronic interlocks (substation control and protection) shall be provided which automatically imposes a fixed sequence of events designed to prevent mal-operation of the circuit breaker unit as a whole.

30.9.8 Protection Devices

Each feeder circuit breaker shall be fitted with a uni-directional series instantaneous overload device, with a calibration range chosen to be a standard for the system. It shall also be fitted with a multi-functional device to afford instantaneous, programmable and thermal image protection. Rate of rise protection is disallowed (may be a standard part of the multi function relay, provided it can be disabled) but impedance protection will be considered.

Each feeder circuit breaker shall be fitted with a line proving device to prove the circuit onto which the circuit breaker has been instructed to close is not faulted. The maximum current that may flow due to the 'line proving', in the event of a short circuit shall not exceed 40 amps. The relay that measures the residual resistance in the circuit and blocks the circuit breaker against closing shall have a setting range of 2 to 50 ohms as a minimum. In addition to blocking the circuit breaker from closing a SCADA indication shall also be given that the closing has been blocked.

A combined intertripping and earth fault protection scheme shall be provided. Each switchboard shall be equipped with a low impedance earth fault detector, arranged to initiate a local mass trip of all dc circuit breakers and to intertrip corresponding feeder breakers at adjacent substations for all causes of feeder CB tripping. 'Intertrip receive' protection relays or related control equipment shall be fitted with a manual reset flag or similar (e.g. display), showing when the protection is operated. Intertrip by-pass facilities shall be provided, by means of auxiliary switches in the substation bypass isolators reconfiguring automatically when the isolator is closed. Inter-trip, in/out of service, switches shall be provided in order to inhibit the intertripping when OLE is sub-sectioned. Provision shall be made for SCADA 'opening' of the feeder circuit breakers without causing a mass trip or intertrip.

Contacts shall be provided to give individual trip alarms from main and back-up protections through the SCADA system.

The SCADA system will include a remote trip facility. In order to maximise reliability, the incoming SCADA control signal for this facility shall be arranged not only to trip the appropriate local feeder circuit breaker but also to trip the corresponding feeder circuit breaker at the remote end of the OLE section via the intertripping pilot wire system.

Each circuit breaker shall be fitted with a push button and lamp (white) to provide a local trip 'circuit healthy' indication on demand with the breaker closed. The current path for this feature shall include the actual circuit breaker trip or actuation coil.

Additionally, a voltage operated relay fitted with a self reset flag indicator shall be provided to supervise the tripping supplies to the switchboard. Contacts shall be provided to give an alarm through the SCADA system.

Each outgoing d.c. feeder cable box shall be equipped with a surge diverter.

30.9.9 Control and Instrumentation

All equipment shall comply with relevant and valid European Standards.

Auxiliary control supply shall be from a floating LV d.c. supply. Individual panels shall have both polarities of the supply fused, or protected by magnetic circuit breakers.

Current measuring devices shall be fed from either shunts or transducers. All 750 V connections and associated relays and instruments shall be capable of withstanding the test voltages according to relevant and valid European Standards.

Main items to be included on each panel shall include:

- Circuit breaker control switch (open/close);
- Circuit breaker control selector switch (local/supervisory); and
- Indication lamps (open/closed - green/red).

All control and control selector switches shall be suitable for locking by means of a padlock. Indication lamps shall be of the LED type to ensure long life.

Each feeder circuit breaker panel shall be provided with an ammeter, of overall accuracy including the shunt to Class Index 1.5.

Each rectifier panel shall be provided with a voltmeter fed from the rectifier side of the circuit breaker, or the rectifier voltage transducer.

Alternatively, listed control and indication elements may also be provided by means of the substation protection and control units (e.g. display). In this case, therefore, padlocking is not applicable.

30.9.10 Overhead Line Emergency Trip

A facility to ensure the fail-safe hard wire emergency mass trip of traction substation dc circuit breakers by the system controllers shall be provided within the Control Centre.

Separate emergency trip push buttons shall be provided for the following two groups:

- Haymarket to Newhaven
- The rest of the Edinburgh Tram Network including the Depot,

This facility shall take the form of a suitably located and identified wall mounted box containing all equipment and push buttons necessary to provide this function.

The equipment to be provided in each traction substation and TP hut for this feature shall comprise a hold-in relay energised from the tripping batteries of the traction substation and a remote normally-closed contact in the Control Centre or other substation. The system shall be provided with trimming resistances to keep the relay current within limits for varying distances to the remote contact. The system is envisaged to be stable at up to 15 km with 1.5 sq mm pilot cores. The mass

trip relay shall have sufficient circuits to trip all feeder circuit breakers and dc rectifier circuit breakers. It is not envisaged to use the rectifier circuit breaker trip and an open link shall be provided in this circuit. Two further normally-open and normally-closed contacts shall be provided for use in cascading the trip to other traction substations in a similar manner.

Provision shall be made for an overhead line emergency trip facility (located in each substation lobby) to allow mobile tramway staff, who may not be authorised for access to the traction substations, to trip the overhead lines in both directions from a substation in the event of a failure of the SCADA system. The logic of this trip facility will be integrated in the central station controller of each substation.

30.9.11 Circuit and Busbar Earthing

Means shall be provided at each panel for applying a safety earthing device to busbar or circuit connections in order to comply with safety legislation. A dedicated earthing truck or other suitable earthing equipment, as needed for the installed equipment, shall be provided at each substation for such purposes.

30.9.12 Isolator Motorised Operation

Where motorised isolators are provided, operation of the feeder isolator and earth switch functions shall be from the substation tripping battery.

Operational commands shall be via SCADA signals hard wired from the SCADA outstation within the substation to relays in the isolator panel.

Both OLE feeder terminals shall have 'live line' detection arranged to inhibit opening of the feeder isolator and this detection shall be brought back to the Control Centre via SCADA.

It shall not be possible to earth a feeder unless the bypass and feeder isolator are both open.

It shall not be possible to close a feeder isolator unless both the earth has been removed and the adjacent bypass isolator is open.

It shall not be possible to close the bypass isolator unless both adjacent feeder isolators are open. SCADA position indication shall be provided for all switching elements in all positions.

In the event of loss of rectified Scottish Power LV supply the operation shall auto change over to a battery supply.

For isolators located in the Depot, this section is not applicable, because of manual operation.

30.9.13 Bypass Isolator Over-current Feature

The bypass isolator when closed shall reconfigure the 'pilot wire' inter-tripping between adjacent substations to bypass the substation in which the bypass isolator is accommodated.

In case protection of contact line cannot be provided by adjacent substations when bypass-isolator is closed, the bypass isolator shall have a 'line current' trip feature where the current passing through the bypass isolator is measured and operates one of two relays depending on the direction of current flow through the isolator to trip both remote substations in the event of detecting a current in excess of setting.

The setting range to be approved by **tie**.

The relays shall be powered from a dedicated battery with a minimum of four hours standby time.

This battery shall be supplied from the substation tripping battery supply. There shall be SCADA indication of loss of battery voltage.

30.10 Batteries and Chargers

30.10.1 Scope and System Voltage

One 100 per cent duty battery, 100 per cent duty charger and dc distribution board unit shall be provided for each traction substation, for the purposes of providing tripping, closing and control supplies for the 750 V dc and ac switchgear. The battery charger will be supplied from the Scottish Power LV ac supplies in the substation. Neither polarity shall be deliberately earthed and the supply shall function unaffected with either pole inadvertently earthed.

It is to be noted that such supplies for the Scottish Power 11 kV switchgear will be derived from a battery and charger to be supplied and installed by Scottish Power themselves (Electricity Supply Regulations requirement).

The nominal battery voltage, suitable for the switchgear, shall be in accordance with BS 2618. The charger supply shall be 230 V, single phase, 50 Hz, and the complete equipment shall be a manufacturer's standard product.

30.10.2 Batteries

The batteries shall be of the high performance type, and shall be designed for a life expectancy of at least ten years under the conditions of service likely to be encountered. Battery cases shall be of high impact polystyrene translucent plastic. The batteries shall be such that maintenance shall be required at not less than twelve month intervals.

30.10.3 Battery Duties

The rating of each battery shall be sufficient to meet the requirements of the most arduous duty cycle at any one of the substations including:

- The continuous standing load; and
- On the assumption the battery is charged to 80 per cent of its rated capacity and the charger supply is then lost, the battery shall then be able to supply the standing load for twenty-four hours and then have sufficient capacity to carry out the closure and tripping of a 750 V circuit breaker twelve times in quick succession.

30.10.4 Battery Accommodation

Each battery together with its associated charger and dc distribution load shall be accommodated in a single, self-contained, ventilated, sheet steel cubicle of rigid construction.

The cells shall be so mounted that ready access is provided to the tops of all cells for maintenance purposes. The battery enclosure internal metalwork shall be treated with electrolyte-resisting paint.

30.10.5 Battery Chargers

Each battery charger shall be of the automatic constant voltage type and shall be suitable for supplying the constant load and at the same time maintaining the battery in a fully charged condition while floating across the load and charger.

Arrangements shall be made such that, in the event of the battery becoming discharged, the rate at which recharging commences is as high as possible consistent with maintaining the automatic charging constant voltage feature and with the connections remaining undisturbed, as for normal service.

Each charger shall also incorporate a boost charge feature, which shall, after having been started, provide an automatically controlled high charge rate sufficient to restore a fully discharged battery to the fully charged state within twelve hours without excessive gassing or any form of damage to the

battery. The boost charge shall be initiated manually but reset to float automatically, and shall not cause damage to any connected equipment. Each charger shall be capable of automatically and continuously supply the constant load with the battery disconnected. Under such conditions, the charger shall still maintain the nominal system voltage without any damage to itself, and the ripple of dc output shall not exceed ±15 per cent.

30.10.6 Alarm Devices

The following shall be provided:

- Undervoltage detection equipment to give local indication (amber lamp) and supervisory alarm when the system voltage falls to below 80 per cent nominal. A time delay shall be incorporated to prevent initiation during temporary voltage dips;

- Charge fail detection equipment to give local indication (amber lamp) and supervisory alarm if the voltage from the charger falls below the nominal floating charge voltage. Blocking diodes shall be provided to prevent the battery voltage being supplied to the equipment, so that only the charger voltage is effective in causing the alarm. The device shall not operate on switching surges or transient loss of ac supply; and

- Earth fault detection equipment to give local indication (amber lamp) and supervisory alarm of the occurrence of an earth fault, and to give local discrimination between positive and negative faults.

The above alarms shall be given separate SCADA alarm channels.

30.10.7 Instrumentation

The following shall be provided:

- Charger output/output voltmeter;

- Output dc load ammeter; and

- Centre zero battery ammeter.

30.10.8 Battery Distribution Board

The following shall be provided:

- Provision for isolating the battery (withdrawing the main fuses);

- Main and subsidiary fuses in both polarities; and
- Subsidiary fuses to dc switchboards (three in Depot traction substation, one in each of the other substations), ac switchgear transformer rectifier units, feeder and bypass isolators, two spare circuits.

30.11 Earthing, Bonding, Surge Protection & Ancillary Equipment

30.11.1 Earthing Systems

Each substation shall be equipped by Scottish Power with an earth system for their equipment which may be available for connection to the Edinburgh Tram Network substation earthing system and equipment, but only by agreement between the parties.

A earthing installation at each traction substation shall also be provided capable of specified performance alone, without recourse to connection to the Scottish Power earth system. Where Scottish Power allows interconnection, the Edinburgh Tram Network earth system shall connect to the Scottish Power earth terminal via a disconnectable link.

The Edinburgh Tram Network earthing systems shall be constructed employing copper conductors, including all necessary junctions, connectors and supports. The installation shall comply with relevant, current and valid European Standards.

The earth systems shall comprise a continuous main earth bar installation, located where possible in the cable trench, and around the inside walls of the substation, with branch connections to equipment and metalwork.

Each earthing conductor shall either be solid copper with a minimum cross-sectional area of 80 mm2 or stranded PVC sheathed copper with a minimum cross-sectional area of 70 mm^2.

All joints and bonds shall be made by proven methods to the current carrying ability of the earth conductor and full details shall be submitted for **tie**'s approval.

Attention is drawn to manufacturers' instructions on the earthing of traction dc switchgear via to low impedance earth fault protection equipment.

An Edinburgh Tram Network local earth rod system, of resistance to earth less than 2 ohm, shall be provided at each traction substation and connected to the substation earth system through a

disconnection link by means of stranded PVC sheathed copper cable with a minimum cross-sectional area of 70 mm^2 per cable. The earth rod system shall be in a minimum of two near equal sections (~4 Ohm) each connected back to the substation earth system as described. The resistance between any point of the earth system and a group of earth rods shall not exceed 0.1 ohm. This assumes earth interconnection with the Scottish Power system.

30.11.2 Traction Negative Busbar System

A negative busbar, insulated from earth and mounted within a sheet steel enclosure, shall be provided at each traction substation. The enclosure shall also incorporate an off-load isolator for the connection cables to the rectifier negative terminal. The negative busbar shall provide the connection point for the outgoing negative feeder cables to the tram track. The enclosure shall be able to accommodate four 1000 square millimetre section aluminium cables to the running rails. The enclosure shall be arranged to facilitate visual inspection of the connections inside. The enclosure shall be provided with robust insulated terminals adjacent to the negative busbar for terminating the stray current monitoring cables. Alternative stray current monitoring system can also be provided whereas no stray current monitoring cables may be necessary.

In order to minimise the flow of stray return currents in the earth and buried services, the negative pole of the traction supply, comprising rectifiers, negative busbars, feeder cables and tram track, shall not be deliberately earthed at any point.

The traction negative busbar of each traction substation shall be connected to the substation earth bar either via a minimum of one BB HVL and two Alstom 'Interval of discharge' (Soule 2 RAY's) in parallel, or via an equivalent circuit (e.g. Siemens Sitras® SCD), to control the touch voltage of the traction negative circuit and provide a fault return path. These shall be accommodated within the sheet steel negative busbar enclosure or in a separate cubicle.

The metalwork of the negative busbar enclosure shall be connected to the substation earth system.

30.11.3 Surge Diverters

Adequate protection against lightning and atmospheric overvoltages shall be afforded to the substation equipment. The characteristics of all surge diverters shall be correctly co-ordinate with those of the rectifier surge circuits, so as to limit overvoltages to acceptable levels and minimise resonance effects.

The equipment connected to the OLE shall be protected against surges by surge diverters.

Each feeder isolator shall be equipped with a non-linear resistor gapless surge diverter connected positive pole to earth at the cable terminations in the substation. The surge diverters shall be of the zinc oxide type, enclosed in the dc feeder circuit breaker cable box.

The surge diverters shall be so designed and constructed to combine a high discharge capacity and low residual voltage with mechanical robustness.

30.11.4 Substation Ancillary Equipment

The following ancillary equipment shall be provided in each substation:

- 2 No. suitable sized and rated fire extinguishers of approved type and size;
- 1 No. fully-stocked first aid cabinet of approved type;
- 2 No. `Electric Shock' wall-mounted framed safety instruction cards;
- 1 No. substation operation diagram printed on a plastic medium and framed;
- 6 No. double-sided rigid plastic notices 100 mm x 600 mm with cord loop attachment, "Danger-Live";
- 12 No. double-sided rigid plastic notices 100 mm x 60 mm with cord loop attachment, "Caution - do not interfere with this apparatus"; and
- 4 No. key safes, approximately 150 mm x 250 mm of approved type.

Sufficient padlocks for all switchgear shall be provided. The structured key security system shall be agreed with **tie**.

All substation door access keys shall be in accordance with the structured key security system set out in Section 22 of these Employer's Requirements.

30.12 Cables & Accessories

30.12.1 General

All cables shall comply with the current applicable specifications of the relevant European Standard and the supplementary requirements of these Employer's Requirements.

30.12.2 Types of Cables

Categories of cables shall be allocated series of reference numbers as follows:

- HV supply cables (1000 series)
- 750 V dc traction cables (positive) (2000 series)
- 750 V dc traction cables ((negative) (3000 series)
- Stray current monitoring cables (4000 series)
- LV supply cables (5000 series)
- Pilot cables (dc transfer trip) (6000 series)
- Telecoms multipair cables (7000 series)
- Fibre optic cables (8000 series)

30.12.3 11kV A.C. Cable

AC cables shall be provided for the interconnection of the Scottish Power HV switchgear, the a.c. circuit breaker, and the transformer rectifier units.

The cables shall be in compliance with Scottish Power standard and may be three phase or single phase with sheaths connected also in accordance with Scottish Power standards.

30.12.4 Traction Supply Cables

Single core 750 V DC copper cables shall be used for the connection of rectifier (positive) to dc switchgear, and rectifier (negative) to negative busbars.

Cables from rectifiers to DC switchgear positive and negative busbars shall be dimensioned taking into account the rating of the transformer/ rectifier unit, including their overload class.

Negative cables may have a reduced insulation level commensurate with the reduced voltage withstand required.

The cables shall be manufactured in accordance with appropriate European Standards.

Conductors shall be stranded tinned copper wires to BS EN 60228.

The insulation shall be butyl rubber (BR) or ethylene propylene rubber (EPR) to BS 6899 type GP2.

Alternatively XLPE may be considered by **tie** with adequate reference application and justification.

Cables shall be anchored at terminations by mechanical plastic glands, where gland plates must be traversed, and if necessary supported by non-hygroscopic resin-bonded laminated wood, hardwood or similar non-metallic approved clamps.

Conductor terminations shall be by means of indented or annular-compressed tinned copper lugs, with heat-shrinkable tube oversheath.

Cable conductors shall be jointed with indented or annular compressed ferrules with an approved compression tool, the joint made up by an approved jointing kit and sheathed by an approved heat-shrinkable tube.

Compression tools shall be certified as calibrated, and shall only be used when within the calibration period.

Cables to be utilised within the permanent works shall be drummed up and provided to site to ensure maximum cable lengths are installed throughout to minimise the necessity for through joints.

30.12.5 Low Voltage Supply and Multicore Control Cables

The cable construction shall comply with European standards.

Cables shall have copper conductor with XLPE insulation, PVC oversheath and, where not installed with mechanical protection, galvanized steel wire armour.

The conductors shall be plain annealed copper wire complying with BS EN 60447 circular or shaped conductors. All cores shall be identified by phase colours, or in case of control cables, by printed numbers.

All sheaths shall be free from defects and impervious to water.

LV supply cables shall be terminated in accordance with the manufacturer's recommendations and the cable cores shall be left long enough to be terminated without the addition of separate tails.

Cables to be utilised within the permanent works shall be drummed up and provided to site to ensure maximum cable lengths are installed throughout to minimise the necessity for through joints.

31 Overhead Line Equipment

31.1 Scope

This Section of the Employer's Requirements defines the overhead line equipment (OLE) requirements that are applicable to the Edinburgh Tram Network which the Infraco must comply with.

31.2 General Requirements

The information provided in this section supplements any information provided in the Tram Design Manual and other documentation provided by **tie**.

Unless otherwise stipulated, all requirements pertaining to overhead line equipment shall be compliant with BS EN 50119.

31.3 Equipment Overview

Appearance of the overhead line equipment is of paramount importance throughout the Edinburgh Tram Network. The appearance must be appropriate to the location, and visual intrusion shall be minimised.

The type of equipment provided (including, for example, auto-tensioned, fixed termination, catenary support; central mast with balanced bracket arms, side masts with cantilever arms, span wire construction etc.) over each section of the Edinburgh Tram Network shall be appropriate to the area and to the tramway operating speed requirement in that location. The use of building fixings shall be maximised.

31.4 Electrical Power Characteristics

The overhead line equipment shall be energised at a nominal 750V in accordance with BS EN 50163: 2005: Railway Applications - Supply Voltages of Traction Systems.

The overhead line equipment system shall comply with the following electrical and operational parameters:

- System voltage;
- Conductor of suitable cross sectional area;

- Traction buried reinforcing DC cables;
- The required operational speeds; and
- All in-service loading conditions.

31.5 Environmental Considerations

The overhead line equipment system shall fully comply with the environmental criteria as set out in these Employer's Requirements.

31.5.1 Ice Loading

The conventional ice loading of 10mm radial shall be used when assessing the ice-loading on overhead conductors.

31.5.2 Pollution

The creepage path and creepage distance of insulators shall accommodate the implications of atmospheric pollution in accordance with EN 50119:2001, pollution level "medium", and for areas close to the sea, "heavy"..

31.6 Material for Equipment

Standard materials shall be used with the exception of the route sections from Newhaven Road to Ocean Drive and Caroline Park to Granton Square Tramstops, where stainless steel or aluminium material (for tubes and fittings) shall be provided.

If 'parafil' or an equivalent material is to be considered, rigorous quality control fully documented and certified measures for the application, installation and long-term maintenance of the material shall be implemented. These measures are subject to specific approval by **tie**.

31.7 Pole and Cantilever Tube Deflection Criteria

The deflection of poles, cantilever tubes and other structural elements under normal and transient loading conditions shall be such as to not detract from the minimum safety functionality or appearance of the overhead line equipment system.

31.8 Mechanical and Electrical Clearances

Mechanical and electrical clearances shall, as a minimum, be in accordance with BS EN 50119 and the guidelines specified in ORR's publication "Guidance on Tramways", Railway Safety Publication 2 (**"RSP 2"**). In addition, a 'safe working zone', shall be incorporated.

31.9 Contact Wire Gradient and Geometry

Contact wire gradients adopted shall take account of the planned tram operating speed in the area and shall follow BS EN 50119 requirements. The contact wire gradient shall be such that at all times and under all environmental and operating conditions, contact with the pantograph is maintained.

The overhead line equipment horizontal geometry shall be arranged so that the contact wire is always in contact with the working width of the pantograph under all environmental and operational conditions.

31.9.1 Contact Wire Height

The governing requirement for the establishment of rules for contact wire heights shall be as clause 5.2.8 of BS EN 50119. For safety considerations, in areas where tram path is shared with the public traffic the contact wire height and the profiling of the wire shall take into account:

- ORR's RSP2 requirement for minimum wire heights where a support has failed;
- Minimise the risk of contact with wire from people and/or objects on open top double decker buses, over-height road vehicles, window cleaners carrying ladders and any third party work;
- Activities associated with the Edinburgh festival, Christmas fun-fair on Princes Street, and similar public events; and
- Provide the necessary clearance for designated high-load routes.

31.10 Structural Integrity

All proposed structures within the overhead line equipment system shall be designed to comply fully with the design parameters and codes of practice specified for the project.

31.11 Electromagnetic Compatibility

The overhead line equipment shall comply with Electromagnetic Compatibility Section of these Employer's Requirements.

31.12 Dynamic Performance

The dynamic performance of the overhead line equipment/pantograph interface shall be in accordance with the requirements of Clause 5.2.1 of BS EN 50119.

The performance of the overhead line equipment/pantograph interface shall be validated by a full dynamic simulation study undertaken during the design phase. The governing specification for all design activities is BS EN 50119.

The study method shall be validated in accordance with the requirements of BS EN 50317 and BS EN 50318.

31.13 Design Life

The design life of the overhead line equipment is set out in Design Life of these Employer's Requirements.

31.14 Auto-Tensioned Equipment Types

31.14.1 Form of Equipment

Low visual impact equipment is required throughout the Edinburgh Tram Network. Thus, anywhere along the route of the Edinburgh Tram Network, where line speed and/or pantograph interaction with the overhead line equipment demands, auto tensioned trolley wire equipment will generally be the appropriate solution.

31.14.2 Conductors and Tensioning Devices

The overhead line equipment shall utilise a single contact wire system, with additional parallel (buried) feeders or catenary system outside the city centre where the messenger wire replaces the parallel feeders..

The contact wire size shall be confirmed by electrical modelling studies and by pantograph/ overhead line equipment dynamic modelling.

Should mechanically tensioned balance weight system be proposed, the tensioning device shall comprise a counterweights and pulleys system of discrete and compact design. For example, the counterweight stack must be incorporated inside the pole structure. The system shall utilise a fail-safe mechanism with vandal proof features.

31.14.3 Tension Lengths

The maximum tension length between anchor locations shall be chosen so as to minimise the number of anchor points but without undue drag, localised hard spots and overloading of the equipment.

31.14.4 Span Length

The pole positioning, and hence span length along the track, shall be chosen:

- To maximise the structure spacing to achieve economy;
- To maintain the technical parameters referred to elsewhere in this document, e.g. geometry, clearance, dynamic performance, etc;
- For visual and aesthetic appearance issues, in accordance with the Tram Design Manual, and
- The achievement of all relevant consents and approvals.

31.14.5 Parallel Feeders

Aerial parallel feeders shall not be permitted. All parallel feeders shall be buried, located in suitable ducts running along the tracks and with cross feeding to the overhead line equipment conductors at suitable intervals. Outside Edinburgh city centre other options, like catenary system may also be offered by the Infraco for approval by **tie**.

31.15 Fixed Termination Equipment Types

31.15.1 Form of Equipment

Fixed termination trolley wire equipment shall be considered as an appropriate and cost effective solution for highly sensitive areas and/or where lower operational running speeds are required.

31.15.2 Reduced Conductor Tension System

At junctions and sharp corners, where the operational speeds are limited by the track geometry, a variant of the fixed termination unsupported wire shall be considered which utilises a reduced conductor tension system.

31.16 Depot Equipment Type

In the Depot area, a fixed termination single contact wire system (supported or unsupported) shall be provided which shall accommodate the wire height constraints.

31.16.1 Equipment Support and Registration

Cantilevers

For both auto-tensioned and fixed termination systems the cantilevers shall consist of a horizontal registration tube insulated and hinged at the face of the pole, and supported by a tie wire.

As an option, fully insulated tubes and steady arms (glass fibre plastic or equivalent) may be proposed and offered for review by **tie**.

Cross Span Wire Supports

In Edinburgh city centre areas, as an alternative to cantilever on pole equipment option, the simple cross span wire support assembly may be considered. These can be constructed between poles or attached to suitable buildings, along the route of the Edinburgh Tram Network. The choice of material and the method of construction of cross span wires shall be subjected to the approval of the planning authority.

All fittings, clamps and accessories shall be standard proprietary items, capable of being sourced freely from the market.

For minimising the visual impact of the equipment the use of non-corroding material (particularly stainless steel) shall be considered by the Infraco.

Jumpers and Feeders

All feeders and jumpers shall be electrically and mechanically compatible with the environmental and operational conditions. The visual impact due to connecting buried feeder cables to overhead conductors shall be considered when selecting appropriate feeder pole locations.

Insulation

All overhead line equipment support and registration assemblies shall be double insulated or equivalent. Failure of any single insulator shall not create an unsafe condition.

Section Insulators

Apart from the entrance to the Depot maintenance workshop, all section insulators shall be of the 'make before break' type.

31.17 Overhead Line Equipment Poles and Equipment Enhancement

Where poles are provided, the shape and colour shall be considered as part of the visual approach. The objective shall be to minimise their overall visual impact. It should be noted that the Tram Design Manual identifies a preference for circular poles.

Consideration shall be given to individual replacement of building fixings by poles in the future, should building alterations require their removal on a temporary or permanent basis.

The appearance around the base of support poles is of importance in certain areas. Consideration shall be given to minimise the impact to and ease of replacement of poles if damaged, e.g., by errant road vehicles.

The paint finish, if painting is required, shall be fully applied at the manufacturers works. However, following installation on site, the paint finish may have to be re-applied in some areas. The paint system to be used shall be offered for approval by **tie**.

Special attention shall be given to avoid damage to painted surfaces during delivery and installation. Specific approval shall be sought to make good any damage to paint work, following installation on site and **tie** reserves the right to reject equipment on the grounds of damaged paintwork alone.

31.17.1 Combined OLE / Lighting Poles

An integrated design of overhead line equipment poles and street lighting is required. This shall seek to optimise the spacing of support poles and minimise visual intrusion of the OLE and road lighting as a whole. An appropriate electrical feeding and earthing scheme shall be provided. This shall minimise the additional components required to be attached to support poles and shall take account of the maintenance approach to be adopted for the road lighting. The general requirements

for bonding and earthing of the system are contained in Earthing and Bonding of these Employer's Requirements.

Poles carrying overhead wiring along Princes Street shall not interrupt axial views down the streets connecting to Princes Street, shall be located between tram lines and shall be placed at regular intervals.

It should be noted that the Tram Design Manual prohibits fixings for wiring to buildings or structures on the north side of Princes Street.

31.17.2 Anchor Bolts, Foundations and Ties

Tie-back anchors shall be permitted in the off-street sections of the Edinburgh Tram Network with adequate anti-climbing protection, the design of which shall be subject to specific approval by **tie**.

Any anchor bolt connections and fasteners shall be fully secured and vandal proofed.

31.17.3 Foundations

For the ease of construction and where applicable the preferred type of foundations shall be of side bearing concrete, cast in-situ. These shall be either mechanically or hand dug, depending on the access and limited space availability for plant and equipment. This type of foundation shall be provided in Edinburgh city centre and populated areas, particularly where underground utilities are closely spaced or not easily detectable.

In certain areas within the Edinburgh Tram Network where the track alignment and construction of the track slab permits, the overhead line equipment foundations may be incorporated within the track slab design.

31.17.4 Fixing to Masonry and Concrete Structures

There are a significant number of buildings, particularly within the World Heritage Site categorised for their architectural or heritage values.

Fixings to buildings listed in schedule 10 of each of the Edinburgh Tram (Line One) Act 2006 and Edinburgh Tram (Line Two) Act 2006 require full listed building consent.

31.18 Safe Working On The System

The configuration of the overhead line equipment shall take into account the project requirements for a safe working zone of 2.0m (measured horizontally from the near rail and also vertically above

the ground). All electrical and mechanical clearances shall comply BS EN 50119 and with the recommendations and guidance provided by HMRI RSP2.

31.19 Switching and Sectioning Requirements

31.19.1 Sectioning

The overhead line shall be divided by means of OLE section insulators into separate electrical sections and subsections, the lengths of which are determined by the locations of the traction substations and operational requirements.

31.19.2 Isolation Facilities

At substation feeder points, off-load, positive polarity, SCADA controlled, motor operated isolator/earth switches (termed 'feeder isolators') shall be provided to isolate and earth each overhead line section from its respective feeder cable. Additionally, positive polarity, SCADA controlled, motor operated load brake isolators (termed 'bypass isolators') shall be provided to interconnect adjacent overhead line sections when the intervening substation is out of service. These shall be connected across the line side of the two feeder isolators, and will normally be open. At key overhead line sectioning points, positive polarity manually operated isolator/earth switches (termed "section isolators") shall be provided to isolate sub-sections from other sub divisions of the section and (in some cases) earth the isolated section.

At the section insulator and the insulated rail joint between Depot and main line, a mechanically coupled double pole section isolator is to be provided to bypass the section insulator and insulated rail joint. The isolator is intended to be used solely to power the Depot and stabling and fans from the main line in the event of failure of the depot traction power supply. It is not intended to be used to power the main line from the depot stabling traction power supply.

31.20 Isolator Enclosures

Feeder isolators and bypass isolators shall be provided.

Section isolators shall be provided. For on-street sections these 'section isolators' shall be totally enclosed in trackside cubicles, referred to as 'section pillars'.

Section pillars shall be of stainless steel construction to IP 65, free-standing with a base set on a concrete foundation. The pillars shall be factory-built assemblies, of rationalised widths to suit the range of isolator numbers required per unit.

The enclosure shall be bonded to the tram track via an insulated 'earth' cable from an internal stainless steel stud, and the arrangements of which shall comply with Earthing and Bonding of these Employer's Requirements.

The isolator/earth switch 'earth' bar shall be bonded to the section pillar and connected to the tram track via suitable cable(s) additional to the above.

The dimensions of the pillars shall be the minimum compatible with standard creepage and clearance distances because physical clearances on the tramway are restricted.

An A4 size document holder shall be provided on the inside of the enclosure door.

The doors shall be outward opening through 180 degrees, hinged internally and fitted with stays. The doors shall be fitted with heavy-duty stainless steel locks operated by dedicated keys, which shall be provided in accordance with the operation and maintenance requirements for the **tie** structured key security system described in Section 22 of these Employer's Requirements.

It shall be possible to view the status of the isolator and any locking without opening the doors.

31.20.1 Paint Finish

The paint finish, if painting is required, shall be fully applied at the manufacturers works. However, following installation on site, the paint finish may have to be re-applied in some areas. The paint system to be used shall be offered for approval by **tie**.

Special attention shall be given to avoid damage to painted surfaces during delivery and installation. Specific approval shall be sought from **tie** to make good any damage to paint work, following installation on site and **tie** reserves the right to reject equipment on the grounds of damaged paintwork alone.

31.20.2 Labelling

Front panel legends, fitted centrally to the door consisting of approved 'Danger 750 V' - labels (black letters on a yellow background), and 'pillar description - reference number labels' with black letters on a polished stainless background, shall be provided on each pillar door.

31.20.3 Isolators

Isolators within an enclosure shall be arranged in groups where possible. The physical position of each isolator within each group shall correspond with the actual direction of the overhead line connected to it, and a standard layout shall be adopted throughout the system.

The isolator blades shall be of copper, and the isolator assembly and its insulation shall be suitable for the required current carrying capacity within the environment of the enclosure.

Feeder and section isolators and operating mechanisms shall be suitable for off-load breaking and fault making in respect of both 'closing' and 'earthing' operations. The operating mechanism for manual operation shall have a firm distinct stop in the operation at each stage of operation. It shall not be possible to move from closed to earth positions, or the reverse, without the operator coming to a definite halt at the 'open' position before moving to the earth position by a separate operator movement.

Bypass isolators and their operating mechanisms shall be suitable for on-load breaking and fault making in respect of 'closing' operations.

The construction of the isolator shall be such that live parts are fully shrouded from the operator, by 8 mm of polycarbonate or equivalent arc resistant material, whilst allowing the position of the isolator contacts to be clearly visible with the enclosure door open.

The isolator mechanism shall be such that it can be locked by means of a padlock in the closed, open or earthed position.

Each isolator mechanism shall be clearly labelled with its unique identifier reference code in accordance with the electrical nomenclature scheme.

31.21 Power Feeder, Reinforcing and Bonding Cables

31.21.1 Feeder Cables

Single core 750 V dc cables shall be used for:

- The connection of substations (positive) to the OLE;
- OLE parallel reinforcing cables;
- Negative cables from substation negative busbars to the track; and
- Negative track parallel cables and rail and track cross bonding cables.

OLE parallel reinforcing cables shall be sized in accordance with the design of the overall traction system.

Feeder cables shall be sized to match the rating of the OLE / reinforcing cable combination of each section.

Feeder cables from the traction substation feeder isolators to the OLE parallel reinforcing cable junctions shall be buried cable ducts running track side. A maximum of two cables may be carried per 150 mm diameter duct.

Cables for different circuits shall not share a common duct. The choice of cable material shall also minimise the number of bi-metallic cable joints.

Positive and negative cables shall not share a common duct.

Reinforcing cables shall be installed in buried ducts along the track. They shall run from OLE feeder point to feeder point with connections to the OLE via single core suitably rated copper cables to 'inbound' and 'outbound' lines. These feeds shall be at traction substations and maximum intervals of 450 m. Cables shall be drummed and supplied at maximum lengths to avoid and/or minimize cable through joints. Where joints cannot be avoided they shall be located in suitable cable drawpits or in neat, small dimension pillars of minimum intrusion on the streetscape. Joints between drum lengths of reinforcing cable, where no OLE connection is involved, may be in pillars or drawpits at the discretion and agreement as to specific installation method statements by **tie**. The insulation system employed at connection points shall meet the requirements of EN 50124-1 2001 to level 0.9 kV and OV4.

At nominal mid points between the OLE feeds and a maximum 250m from an OLE feed point there shall be suitably rated copper cross connections between the 'inbound' and 'outbound' OLE contact wires via the shortest practicable visually acceptable cable route. There shall be no joints in these cables.

Positive reinforcing and feeder cables shall be terminated in compression cable lugs of proprietary appropriate size and material for the cable used. Proprietary crimping tools designated for the cable lug to be crimped shall be used. Such crimping tools shall be under quality assurance control and within their calibration period. The appropriate flat stainless washer shall be used between cable lug and fixing bolt head. At all bi-metallic connections a suitable bi-metal connector piece shall be employed such that dissimilar metals are not connected other than by molecular fusion.

Feeder cables to the OLE shall be copper cored flexible, where required, installed in the OLE support poles in a neat and unobtrusive manner. As installed the cables shall meet the requirements for double insulation such that two distinct insulation layers can be identified to the

satisfaction of HMRI (or the appropriate regime in force). There shall be no joints between connection to the contact wire and the connection to the reinforcing cable(s).

The bi-polar section isolator at the eastern Depot entrance shall have one side of the positive pole cabled to the main line OLE parallel reinforcing cable by duplicate suitably rated cables. The other side of the positive pole shall be cabled to the Depot east isolator panel by duplicate suitably rated cables. The negative pole shall have suitable cables to each side of the isolator, one to each rail either side of the insulated rail joints.

Negative cables may have a reduced insulation level commensurate with the reduced voltage withstand required.

31.21.2 Track to Traction Substation (TSS) Negative Return Cables

Each of the four running rails in the vicinity of the TSS shall have a cable brought back to the negative busbar of the TSS.

A nominal one metre from the position on the running rails of the connections mentioned in the above, the cess running rail of each track shall be connected to the six-foot rail of the other track by a single cable. These are also classed as 'return' cables.

31.21.3 Rail to Rail and Track to Track Traction Cross Bonds

The rails of each track shall be connected together with a single suitably rated cable at suitable intervals.

At every second connection in the above, the six-foot rails of each track shall be connected together with a single suitably rated cable.

31.21.4 Running Rail Continuity Cables

Where 'along track continuity bonding' is required for negative return traction current return, 'along track' bonding cables shall be installed. Places requiring such bonding are:- Insulated rail joints to be normally bonded out, fishplated rail joints, rail sliding expansion joints (breathers), points and crossings, or other designated places.

'Along track bonding' shall comprise duplicate copper or steel cables as a minimum for each running rail to be so bonded.

31.21.5 General Requirements for Cables

All cables shall be terminated in compression cable lugs of proprietary appropriate size and material for the cable used. Proprietary crimping tools designated for the cable lug to be crimped shall be used. Such crimping tools shall be under quality assurance control and within their calibration period. The appropriate flat stainless washer shall be used between cable lug and fixing bolt head. All return cables shall be connected to the running rails via proprietary connector plates to connect with the running rails using duplicate 'Cembre' or equivalent connectors, by milled holes in the rail web with connector thimbles expanded into the holes on a spacing not less than that allowed by the track designer. Bolt and connection sizes shall be coordinated with the rating of the cable size to be connected. Simpler single 'Cembre' type connections (or similar approved) may be used for cross bonding cables and duplicated continuity cables mentioned in the above.

The cables shall be manufactured to European standards, appropriate to their application.

Cables shall be anchored at terminations by mechanical plastic glands, where gland plates must be traversed, and if necessary supported by non-hygroscopic resin-bonded laminated wood, hardwood or similar non-metallic approved clamps. Conductor terminations shall be by means of indented or annular-compressed lugs to suit the cable, with heat-shrinkable tube over-sheath.

Cable conductors shall be jointed with indented or annular compressed ferrules with an approved compression tool, the joint made up by an approved jointing kit and sheathed by an approved heat-shrinkable tube. Compression tools shall be certified as calibrated, and within the calibration period.

31.21.6 Cable Ducts

Power cables shall be laid in suitably sized UPVC/polyethylene cable ducts. Parallel reinforcing cables for the OLE will require a minimum of 200 mm diameter ducts.

Draw pits shall be sized to suit the particular cables installed within the cable run and shall facilitate the installation of the cables without damage to the cable. Particular attention shall be made to ensure the cable loop can be installed without damage to the cable when installing at mid point.

Suitable draw wires shall be installed in each of the ducts when they are laid, and the draw wires shall remain in the ducts after the installation of the cables to aid any future modification or repair work.

31.21.7 Installation of Cables

The arrangement of cables and all methods of laying and installation, including any special methods that may be necessary, shall be submitted by the Infraco for approval by **tie**.

Unless it has been agreed that the construction of cables is such as to permit laying at sub-zero temperatures, cable laying shall take place only when the ambient temperature is above 0°C and has been at this temperature for at least 24 hours, and approved special precautions have been taken to maintain the cable above this temperature to avoid risk of damage during handling. The recommendations of the cable manufacturer must also be taken into account.

All cables shall be installed with a bending radius not less than that recommended by the cable manufacturer.

Cable installation shall take account of the physical properties of the cables and the manufacturer's recommendations shall be clearly detailed on all cable pulling schedules.

All joints and terminations shall be made by proven methods to the current carrying ability of the cable and full details shall be provided to **tie**.

31.21.8 Surge Diverters

Surge diverters shall be positioned at the junction of each feed point and the OLE at traction substations on the OLE side of the isolator, and at over-bridges.

Surge diverters shall be of the gapless, metal oxide type with a rated discharge current of at least 10kA. The earthing terminal of the arrester will be connected to buried rods to provide an earthing resistance of less than 5 ohms. Surge arrestors' design, material and performance shall conform to the requirements of power supply specified standards for the Edinburgh Tram Network.

31.21.9 Bonding

The earthing and bonding requirements shall comply with **tie**'s Earthing and Bonding Policy (see Section 34 of these Employer's Requirements).

32 Stray Current

The ETN shall be designed in accordance with BS EN 50122-2.

In order to keep the stray currents caused by the traction return current as low as possible, permanent conductive connections between the return circuit and earth, including drainage diodes, are disallowed. The rail insulation against earth shall be at least five times better than recommended in BS EN 50122-2 before commencement of the Testing and Commissioning Phase.

Voltage limiting devices between return circuit and earth shall be dimensioned such, that they do not short-circuit the return circuit and earth during normal operation of the ETN, but ensure that accessible voltages do not exceed 60 V limit stated in RSP2 clause 183.

Where track substructures are steel-reinforced in longitudinal direction, a sufficient amount of reinforcement bars, i.e. at least four per track, shall be longitudinally interconnected by welding. At both sides of expansion gaps in the substructure, these bars shall have welded cross-connections and shall be interconnected in longitudinal direction by means of a conductor with suitable mechanical flexibility. This interconnected system shall not be connected to the return circuit at any point.

The Infraco must produce an Edinburgh Tram Network specific Stray Current Mitigation Strategy document that clearly defines its strategy for achieving as low as reasonably practicable protection requirements for the stray current effects and must submit such strategy to **tie** for their approval. Additionally, as part of that Stray Current Mitigation Strategy, the Infraco must produce a "Code of Practice for Stray Current Corrosion Control" and submit it to **tie** for their approval.

33 Low Voltage Architecture

The LV supplies shall be arranged by the Infraco with the DNO, and this shall also include all necessary metering equipment or agreements for provision of unmetered supplies. The LV supplies shall include all those required for illuminated road signs, other road furniture, street lighting, traffic signal controllers, points actuation, tram signals, communications equipment, and Tramstop equipment.

The LV supplies shall provide the necessary security of supply to achieve the overall ETN reliability requirements, for individual elements and as a whole.

The LV supplies shall allow cabinet sizes in areas of visual concern to be minimised.

Provision shall be made by the Infraco for the attachment of local generators at critical points in the ETNin the case of local supply outages (e.g. at Tramstops).

The system architecture provided by the Infraco shall take account of the known statistical history of local power outages such that the overall ETN system and subsystems availability is achieved.

In establishing the capacity and duration of any UPSs provided, the time that the Infraco maintenance staff may need to mobilise and install a temporary generator shall be considered by the Infraco and advised to **tie**. This time shall be demonstrated by the Infraco to **tie** during the commissioning period. **tie** shall give at least two weeks notice that the test may be required. **tie** may then require the test to be undertaken by the Infraco immediately with no further prior notice at a time and location to be determined by **tie**. This time shall be appropriately included in the overall availability analysis for the ETN.

LV power design by the Infraco shall take account of local system requirements e.g. for additional lighting and for specific loads, such as the passenger lift at Murrayfield Tramstop and drainage pumps where installed.

The LV architecture shall reflect the fact that isolated supplies will be required trackside and remote from Tramstops or substations at such as pointwork and signals at tramway junctions, and isolated TPDS cabinets.

Particular attention must be given by the Infraco to suitable redundancy for critical equipment such as drainage pumps and the communications systems.

LV supplies to substations shall be provided as part of the Infraco's arrangements with the DNO unless these supplies are provided from elsewhere.

Where UPSs are to be provided by the Infraco, careful consideration of appropriate loads to be supplied should be given by the Infraco. Automatic load-shedding schemes shall be considered where appropriate to support the required overall System availability.

Proposals for remote metering of substations shall be provided by the Infraco for the approval of **tie**.

34 Earthing and Bonding

The requirements for earthing and bonding are set out in the latest version of the document "System Earthing Policy", reference ULE90130-SW-REP-00071 and the Infraco shall comply with such requirements in respect of carrying out the Infraco Works.

35 Supervisory Control and Communications Systems

35.1 Scope

The scope of this section of the document is to define the Supervisory Control & Communications requirements that are applicable to the Edinburgh Tram Network (ETN).

It is split into three parts:

- Specific technical requirements of the various telecommunication subsystems;
- Components of those subsystems located at the Control Centre;
- Common considerations applying to these subsystems.

35.2 Specific Technical Requirements

This describes the various subsystems of the Supervisory Control and Communications System:

- The Tram Position and Detection Subsystem;
- The Passenger Information Display System;
- The Telephone Network;
- Operational Radio System;
- Passenger Help / Passenger Emergency Help Points;
- Closed Circuit Television (CCTV) System;
- Supervisory Control and Data Acquisition;
- Operational Data Network.

1.3 sets out considerations that apply to all Communications Subsystems that are included in 1.2.

The detailed interfaces between Infraco and Tramco shall be developed. Consequently the statements made in the ERs concerning the scope split between Infraco and Tramco may be subject to change.

35.3 Tram Position and Detection System

35.3.1 Overview

The Tram Position and Detection System shall provide the information needed to monitor the efficient and effective movement and to implement the overall regulation of trams running on the Edinburgh Tram Network. The Tram Position and Detection System shall include both tram borne and trackside equipment.

Each tram driver shall be responsible for safe tram operation using 'Line Of Sight' principles, with the Tram Position and Detection System identifying and setting the correct route ahead of the tram and providing tram signals.

The Tram Position and Detection System shall provide monitoring facilities to the Control Centre staff.

The Tram Position and Detection System shall collect the following data from each tram as is passes over the loops for transmission to the Control Centre in real time:

- Tram number;
- Tram run number;
- Tram destination;
- Driver staff identity number;
- Driver duty number; and
- Whether the Tram is in service or out of service.

The Tram Position and Detection System shall provide a number of functions which shall include:

- Tram identification;
- Tram position on network (outside of depot);

- Tram progress monitoring;
- Route setting;
- Processing of manual 'Tram ready to start' and automatic advance signal demand requests from trams;
- Provide demands to the Points Controllers to permit trams to safely traverse points junctions;
- Provide demands to the local Traffic Signal Controller(s) to permit trams to safely traverse tram/road crossings; and
- Tram signals to provide controlled entry to and exit from the depot berthing and maintenance facilities;
- Store data concerning the times each tram arrives at and departs from all of the Tramstops. This will be passed to the Central Data Recorder to allow the daily performance of the system to be calculated by the Performance Monitoring System.

The Tram Position and Detection System shall convert relevant Tram Position and Detection System data into a format to update the Real Time Passenger Information Display system.

On the approach of a tram to each Tramstop and at the termini, the Tram Position and Detection System shall provide updates to the Passenger Information Display system such that the Tramstop Passenger Information Displays are updated and display information as stated in 35.4.1.

On each day, the TPDS shall enter the details of journeys for the particular tram for each entire operating day into the tram on-board computer at the commencement of service. The tram driver shall input his own driver code and the tram diagram number for the day. Alternatively, the TPDS may transmit this data to the tram. Any change to this data e.g. as the result of an incident affecting the service shall be initiated by the driver.

The Tram Position and Detection System will include the ability to:

- Display to the Driver how early or late he/she is at each stop;
- Allow the Driver to issue 'Tram Ready-to-Start' commands at selected Tramstops;
- Allow the Driver, when his/her tram is on the approach to a diverging junction, to manually demand that the points move left or right by operating controls in the cab.

35.3.2 Technical Requirements

Key locations where Tram Position, Route Setting and Detection Equipment shall be provided shall include:

- At the approach to, and exit from, tramway/ road junctions;
- Entry to, and exit from, the Depot;
- At the approach to, and at, all Tramstops;
- At the approach to, and exit from, points and crossings.

Trackside Equipment at each of these locations shall be connected to the Edinburgh Tram Operational Data Network.

In the event that this Operational Data Network fails, the Trackside Tram Position and Detection System Equipment at each of these locations shall continue to operate autonomously until network connections are restored, at which point normal operations shall resume without Control Centre staff intervention.

The TPDS shall pass the times at which each tram arrives and leaves each Tramstop to the Performance Monitoring System (PMS), so that the PMS can calculate the operational performance of the Tram System according to specified algorithms.

Tramway signal heads shall be positioned at all signal controlled Track and Road Junctions and Pedestrian Crossings to allow optimum sighting for the tram driver. Local environmental conditions and the requirements of all interested parties, including that of HMRI (or the appropriate regime in place), shall be taken into consideration when choosing the positions of these signals.

Tramway signal heads shall display different proceed aspects for different routes if they are signalled separately. In such cases the Tram Position and Detection System shall pass the appropriate direction request to the road traffic signal controller as well as the point controller.
Tramway signal heads shall indicate the acceptance of the signal demand by the system to the tram drivers.

The lie of all facing points shall be detected and displayed by point indicators. These are in the scope of the Points Control System, and are described in the section of this document dealing with the Track. However, although Signals and Points Indicators shall be clearly distinguishable, they should also be in similar style, and it will require some co-ordination with the Points Controller supplier to ensure compatibility.

Tramway signal heads shall utilise Light Emitting Diodes (LED's) and not incandescent lamps.

At all signal controlled tram and road junctions there shall be an interface installed between the Edinburgh Tram Network Tram Position and Detection System and the local traffic Signal Controllers. All tram signals at signalled controlled tram and road junctions shall be driven directly by the Traffic Signal Controller, through demands from the Tram Position, Route Setting and Detection System. The Tram Position and Detection System/Urban Traffic Control System interface shall implement an agreed Tram Priority at each signal controlled junction.

Each Tram Position and Detection System/Urban Traffic Control System interface shall incorporate the facility for the initiation of a "tram proceed" signal in the event of either tram detection failure or local Urban Traffic Control System interface failure. This facility shall be available at all times for use by the Control Centre Staff. Trackside facilities for tram drivers to make manual requests of the UTC are not required. A foreseeable single point failure shall not cause a tram to be presented with a tram stop signal on the street that causes the tram to stop for more than 5 minutes. A FMEA analysis shall be produces within 8 months of contract close that satisfactorily demonstrates that the proposed solution meets this requirement.

The failure of the Tram Position and Detection System equipment at any signal-controlled road crossing shall initiate the immediate operation of the junction into a predetermined (adjustable) priority cycle sequence. All such failures shall be monitored, reported and logged to the Tram Control Centre via SCADA and passed to the PMS System.

The implementation of the detection system at Tramstops and other trackside locations will be permitted to use the Tram Position and Detection System hardware in lieu of a Supervisory Control and Data Acquisition Remote Termination Unit for the passage of alarms and indications, should this prove a more efficient use of hardware resources.

35.3.3 Tram-Borne Equipment

The Tram Position and Detection System shall include equipment to be installed on the trams. This equipment shall include:

- A Driver's Panel and keypad, to be installed in each cab;
- Communications equipment, to provide transmission of messages between the tram and the trackside equipment;
- Vehicle fault / maintenance indications / alarms transmission interface.

This equipment shall utilise the on-tram power supply.

All operations data messages etc. to or from the tram-borne Tram Position and Detection System shall be monitored and recorded in the equipment room for future reference or fault investigation.

35.4 Passenger Information Display System (PIDS)

35.4.1 Overview

Each Tramstop platform shall be equipped with a real time passenger information display system that shall be connected to the Control Centre by the Operational Data Network.

PIDs shall allow a limited selection of messages and free-form text to be displayed, at selected individual, selected groups or at all Tramstops on command from the Control Centre.

Each platform shall be equipped with at least one double-sided display; the display shall be in the form of a dynamic three line display.

Each display shall conform to the requirements of "DfT Inclusive Mobility - Guide to best practice in access to transport infrastructure". They shall each have the following characteristics:

- It shall be double sided;
- It shall be based on LED technology;
- Each side shall have three dynamic information lines, the third of which shall also provide a time display;

- Each line shall have at least 32 characters;
- Each character shall be at least 50 mm high;
- Characters shall be bright yellow on a black background;
- The PID shall adjust to ambient light levels making it legible in all weather and lighting conditions.

Each Passenger Information Display shall be sited so that it is visible to anyone standing within the Tramstop shelter, and from as much of the platform area as possible.

Passenger Information Displays shall also be provided at the following locations:

- Ingliston Park and Ride facility;
- Edinburgh Airport passenger terminal;
- Ocean Terminal Shopping Centre; and
- Haymarket Railway Station.

Alternative types of display may be used at these locations subject to agreement with **tie**.

At termini, the Passenger Information Displays shall display a departure time, which shall be the later of the scheduled departure time and the arrival time plus one minute. At other Tramstops, the Passenger Information Displays shall show variable messages including the destination and time to arrival (in minutes) of the next three tram service arrivals, or arrivals within the next 30 minutes, which ever is the less at the particular platform.

Tramstop Passenger Information Displays shall be able to display Lothian Buses 'BUSTRACKER' information as an overall capability. Real-Time data shall be provided over an internet connection by the client in an agreed format.

The following Tramstops shall have Passenger Information Displays that display the arrivals of both buses and trams at the Tramstop:

- Ocean Terminal
- Foot of the Walk
- Picardy Place
- Saint Andrew Square
- Princes Street
- Haymarket
- Edinburgh Park Station
- Airport
- Crewe Toll
- Granton

Passenger Information Displays on Tramstops, including those with bus/tram interchange facilities, shall be capable of prefacing the destination of the tram service being displayed by a two or three digit 'trip number' and of any required bus service by a three digit route number.

Each Passenger Information Display shall incorporate a digital time display (synchronised to the Edinburgh Tram Network time server derived from the Rugby Radio Clock or its successor or similar) as part of the display.

The colour and contrast of the lettering that is displayed by the Passenger Information Display shall fully take into account the requirements of the visually impaired. In particular DfT guidelines e.g. 'Inclusive Mobility - relating to provision for the visually impaired' and the requirements of Mobility and Access Committee for Scotland (MACS) shall be considered.

The Passenger Information Display System shall incorporate the necessary degree of redundancy and duplication to enable the systems availability targets to be achieved without losing the ability to handle faults and accept necessary upgrades.

The equipment shall be consistent with the design of the structural elements of the Tramstop.

The Passenger Information Displays shall have 3 line LEDs and configured as lines, scrolling functionality should be possible.

35.5 Telephone Network

35.5.1 Overview

The Edinburgh Tram Network shall be provided with a Telephone Network that shall provide two-way voice communications between all staff at fixed locations throughout the Edinburgh Tram Network. The main Operator interface with the Telephone Network shall be provided by an integrated workstation at each Control Centre staff position.

The Operator's interface shall be designed to carry out control functions in an ergonomically efficient manner.

The Telephone Network shall comprise of the following sub-systems:

- A central Private Automatic Branch Exchange (PABX):
- Public Switched Telephone Network;
- Depot extensions (via the Depot structured cabling scheme);
- Passenger Help / Emergency Help Points (via the Operational Data Network);
- Public Address System (via the Operational Data Network);
- Substation extensions (via the Operational Data Network); and
- A Voice Recorder;
- Control Centre Human Computer Interface (HCI) for the telephony services; and
- Call logging and maintenance facilities.

To facilitate management and maintenance of the PABX, it shall be provided with a maintainer's workstation, located in close proximity to the equipment.

The PABX shall provide:

- Digital call recording;
- Digital call logging;
- Maintenance and subscriber management; and
- All recording of the Telephone Network is to be digital to the current best medium.

All recording as described above should be carried out to the data recorders.

The Telephone Network shall include all PABX equipment, all necessary interfaces, configuration of the system elements, the connecting cables and management and diagnostic facilities.

The Telephone Network shall provide voice communications to external agencies including the emergency services and the urban traffic controllers.

The Telephone Network shall provide maintenance and administrative staff within the depot and substations telephone communications facilities appropriate to their needs.

35.5.2 Technical Requirements

The Telephone Network shall provide voice communication with all internal Edinburgh Tram Network organisation members and external parties but not with trams.

The Telephone Network and all associated components shall be of sufficient capacity to meet the current and future needs of the Edinburgh Tram Network.

All elements of the Telephone Network shall be designed to operate in an integrated manner.

The Telephone Network shall use the Operational Data Network for call routing to remote locations, e.g. Tramstops and traction power substations.

Suitable operator equipment shall be provided for the depot receptionist.

Suitable telephone handset equipment shall be provided for depot operational, administrative and maintenance staff.

Suitable telephone handset equipment shall be provided for traction power substations.

Access to the Public Switched Telephone Network shall be configurable at all telephones, including those within the depot and substations, in order to change call barring and security measures.

PABX equipment shall be located in the Equipment Room. A multi-pair tie cable shall be provided to interconnect the PABX with the depot structured cabling patch panel.

The Telephone Network shall be equipped with a Maintainers' Workstation, also situated in the Equipment Room, for network management and diagnostics.

The Maintainers' Workstation shall allow the:

- Display of system status and alarms;
- Download of call and system logs to removable media;
- Configuration of the Telephone Network;
- Management of subscribers;
- Provision for updating system software; and
- Reporting of real time status and alarms to external equipment.

35.6 Public Address System

35.6.1 Overview

Loudspeakers and Audio Loops located at each Tramstop platform shall form part of the Edinburgh Tram Network Public Address System. The Operational Data Network, details of which are contained in Section 35.6.1 shall connect the associated amplifiers/controllers to the Control Centre.

35.6.2 Technical Requirements

Each Tramstop shall constitute a zone.

An appropriate number of low output speakers shall be provided at each platform to prevent the possibility of announcement intrusion into adjoining properties, yet clearly audible without distortion on all areas of the platform. The speakers and their mountings shall be visually unobtrusive.

The Control Centre shall have the ability to make direct announcements to any Tramstop or groups of Tramstops, or turn off individual Tramstops or groups of Tramstops.

There shall be automatic switching between the volume setting for day / night time for each day of the week at the appropriate time of day.

Each Tramstop platform shall also be equipped with an audio loop to provide Public Address facilities for those who use hearing aids. The messages conveyed by these audio loops shall be identical to those issued by the standard Public Address equipment.

Park and Ride facilities shall be considered as a single Tramstop for Public Address purposes.

A 'library' of pre-recorded Public Address announcements shall be available to the Control Centre. Facilities shall be provided in the Control Centre for suitably trained operational staff to record additional announcements.

The approach and passing of 'Out of Service' trams shall be capable of initiating an automatic announcement at the stop advising passengers of the approach of the 'Out of Service' tram as it passes through the network.

35.7 Operational Radio System (ORS)

35.7.1 Overview

The ORS shall meet the mobile communications requirements for operation and maintenance requirements of the trams, and the tram network, and have sufficient capacity to meet the known future needs as defined in these Employer's Requirements.

An ORS shall be provided to enable safe and effective two-way communication enabling voice and data exchanges between the Control Centre staff and:

- Drivers on board an individual Tram, groups of Trams and/or all trams;
- Drivers of road and other support vehicles for the Edinburgh Tram Network; and
- Individually, or in groups, other mobile Edinburgh Tram Network operations and/or maintenance staff using hand portable equipment along the Edinburgh Tram Network and in the Depot.

Reliable voice communications shall be available throughout the length of the route, and to all areas used by operations or maintenance staff in the course of their duty so that messages of normal, priority or emergency status can be conveyed with high reliability.

The main operator interface with the ORS shall be provided by workstations installed in the Control Centre (for Control Centre staff), and tram mounted mobiles (for tram crews), road vehicle mounted mobiles and hand portable equipment for other mobile staff. Infraco shall supply 130 sets of radios with two spare batteries each and carrying cases. These sets will be supported by suitable re-charge racking and storage facilities.

The ORS shall comprise:

- A trunking controller;
- Sufficient base-stations to provide acceptable and reliable coverage to the satisfaction of **tie**;
- Integrated Control Centre operators' equipment;
- Mobile equipments for tram, road vehicle or hand-portable operation; and
- All communications links and configuration of the system.

35.7.2 General Requirements

The ORS shall use trunking technology capable of group and broadcast calls with normal or emergency priority.

Base-station equipment in close proximity to the Edinburgh Tram Network shall connect to the trunking controller via the Operational Data Network.

The radio system or two-way communication shall not be affected by the failure of the Control Centre systems or supplies.

The ORS shall operate within allocated frequencies administered by OfCom. Operating licences and consents for the ORS shall be obtained from OfCom and any other relevant authorities, e.g. Civil Aviation Authority (CAA). The Operator shall be required to hold all such licences and permits obtained.

Communication shall be reliable, continuous and free from interference as set out in the RAMsS section of this document.

The Operational Radio System shall have all voice communications digitally recorded by the central voice recorder. Recording of the Operational Radio System voice communications shall be integrated with recording of the Telephone Network.

All recording of the Operational Radio System is to be digital to the current best medium.

35.7.3 Short Codes

The Operational Radio System shall be able to send 'short codes' to Trams. It shall be possible to send such short codes to individual trams, groups of trams or to all trams and shall be configurable by the Operator's administrator.

The short codes shall be:

Table 85 - Radio Short Codes

Status Message	Status Meaning	Control to Tram	Tram to Control
CHANGE	Change Active Unit		✓
ACK MESS	Status message acknowledge		✓
ACK CALL	Group Voice Call Acknowledge		✓
###-DEP	Departure from departure points, where ### is the three letter code for each departure Tramstop.		✓
DELAY	Delay to Report		✓
FAULT	Defect to Report		✓
NEWCREW	Crew Change Complete		✓
HELP	Police Required		✓ (see notes below)
EXIT	Depot Exit Request		✓
ENTRY	Depot Entry Request		✓
RELIEF	Crew Relief Request		✓
XO-DONE	Crossover / Turnback complete		✓
STABLED	Tram Stabled		✓
CREWGONE	Driver Leaving Tram – will report back		✓

ALL-STOP	Stop Immediately	✓	
STOPNEXT	Wait Next Stop	✓	
FIREMEN	Beware Fire Engines	✓	
FIREGONE	Fire Engines Clear	✓	

Notes

The 'HELP' code shall also be able to be sent from the hand portable and from the road vehicle radios; and

The emergency call functionality shall also require the use of short codes.

There shall be at least 30 codes.

The Operational Radio System including all mobiles radios and hand-portables shall be capable of being reconfigured by the Operator to operate with amended or additional status messages.

35.7.4 Physical Considerations

The Radio System Trunking Controller shall be installed in the Equipment Room. It shall communicate with either the maintainer's workstation or as a separate dedicated workstation, located in close proximity to the equipment.

All base station antennae shall be fitted with adequate surge protection measures.

Provision shall be made for charging racks sufficient for the for hand-portable radio equipment. Charging racks are to be located in the Control Centre.

All masts required to support base station equipment shall be capable of withstanding all foreseeable wind loading. They shall be fitted with anti-climb protection.

35.7.5 Radio Maintainers' Workstation

The Operational Radio System shall be equipped with a Radio Maintainers' Workstation for network management and diagnostics.

The Maintainers' Workstation shall allow the:

- Display of system status and alarms;
- Download of system logs to removable media;
- Configuration of the Operational Radio System;
- Subscriber management;
- Provision for updating system software;
- Reporting of real time status and alarms to external equipment; and

The Operational Radio System maintainers' workstation shall be situated in the Equipment Room.

Fault and downtime information shall be transmitted to the PMS system.

35.7.6 Road Vehicle Mobile Radio Equipment

The Operator and Maintainers will operate road vehicles requiring Operational Radio System mobile radio equipment. As a minimum all road vehicles shall be equipped with:

- Mobile transceiver;
- Cable harness, feeder and antenna;
- Display, keypad, speaker & microphone; and
- Necessary power supplies.

All road vehicle mobile equipment shall be equipped with a keypad and alphanumeric display unit and be capable of displaying and storing short data messages.

Road vehicle mobiles shall translate status codes into meaningful textural messages.

All vehicle mobiles shall be equipped with an emergency call facility.

35.7.7 Hand-Held Mobile Radio Equipment

Certain Operational and Maintenance staff will be mobile and require hand portable mobile radio equipment. As a minimum the equipment shall include one hundred and thirty sets of:

- Hand-held radios with battery;
- Carrying cases for the hand-held radios;
- Two spare batteries for each radio;
- All necessary operational accessories, such as lapel microphones; and
- Sufficient charging racks suitable for 230VAC 50Hz operation to ensure availability of fully charged radios.

As a minimum the handportable radio shall use batteries with a life of 10 hours when used with a 90%rx / 10%tx duty Cycle.

Battery chargers shall fully charge a battery in less than 4 hours.

All hand portable radios shall be weatherproof and suitable for continuous use on or about the person in the outdoor environment.

All hand portable mobile equipment shall be equipped with a keypad and alphanumeric display unit and be capable of displaying and storing short data messages.

Hand portable mobiles shall translate status codes into meaningful textural messages.

All hand portable mobiles shall be equipped with an emergency call facility. The hand portables shall operate effectively and clearly within the trams and along the route of the Edinburgh Tram Network.

35.7.8 Tram borne Radio Equipment

Radio equipment shall be fitted to each driver's cab to enable two-way voice communications between drivers and controllers at the depot.

The Operational Radio Network equipment fitted to the tram shall include, as a minimum:

- Mobile transceiver;
- Keypad and display compatible with MAP27 interface protocol;
- Radio antenna, to be mounted on the tram roof.

The above equipment shall be free issued to the Tram Supplier for installation.
This radio equipment will utilise equipment supplied by the Tram Supplier, including:

- Gooseneck microphone;
- Emergency call button or kick switch and interface to the ORS;
- All necessary interconnections between Operational Radio Equipment in both cabs provided; and
- All necessary interconnections to other on-tram systems including power supply.

All voice communications involving the tram driver shall be via a hands-free method incorporating the touch-screen console and the gooseneck microphone so as to minimise distraction of the driver from his/her driving responsibilities. The integration of these functions shall be undertaken by Infraco.

When the tram is required to change direction of travel; e.g. after arrival at a terminus, the tram driver shall not be required to make any input to the Operational Radio System as he/she takes up occupation of the 'now leading' cab and the 'Change' status message shall be automatically generated.

Tram radios shall translate status codes into meaningful textual messages and display these to the driver.

All radio calls received during on-board Public Address announcements shall be clearly indicated to the driver at the time of receipt.

All tram-borne radios shall be equipped with an emergency call facility.

35.7.9 Tram-Borne Interfaces

The interfaces for tram-borne Operational Radio Network equipment with other tram-borne systems shall include:

- Passenger Emergency Help Points;
- Public Address System; where the tram driver instigates an on-board Public Address, this shall take precedence over any incoming radio calls received during the duration of public address. The tram driver shall be alerted to the presence of an incoming radio call;
- Radio voice communications and an attack alarm shall be provided between the tram drivers and the inspectors on board each tram.

35.8 Passenger Help / Passenger Emergency Help Points

35.8.1 Overview

Each Tramstop platform shall be equipped with at least one Passenger Help / Passenger Emergency Help Point that shall be connected to the Control Centre by the Operational Data Network.

Each Passenger Help / Passenger Emergency Help Point shall be sited so that it is visible by the platform Closed Circuit Television camera.

Provision shall be provided for the connection of future additional Passenger Help/Passenger Emergency Help Points, as a minimum, at Ingliston Park and Ride facility.

All Passenger Help / Passenger Emergency Help Points System Equipment shall comply with the latest disability advice from the Department for Transport.

35.8.2 Technical Requirements

Each Passenger Help / Passenger Emergency Help Point shall be provided with a two-way speech connection between the user on the Tramstop platform and the Control Centre Staff.

Each Passenger Help / Passenger Emergency Help Point shall be clearly visible and signed, and mounted in a manner that restricts its vulnerability to vandalism.

Each Passenger Help / Passenger Emergency Help Point shall be capable of being activated in two modes, normal and emergency, and there shall be a clearly marked and separate activation button for each function. Initiation of a call at the Passenger Help / Passenger Emergency Help Point shall be by pushing the appropriate call button.

Initiation of a call shall initiate the immediate recording of the subsequent voice communication that shall be time and date related.

Initiation of a call at the Passenger Emergency Help Point shall also cause the relevant Closed Circuit Television camera to focus on the Passenger Help / Passenger Emergency Help Point, overriding any sequential scanning for that camera. The recording rate of the CCTV camera will be increased during the PEHP conversation to the rate specified at section 35.14.13 of these Employer's Requirements.

35.9 Closed Circuit Television

35.9.1 Overview

The Edinburgh Tram Network shall be provided with a digital colour Closed Circuit Television (CCTV) System.

The tram CCTV system shall interface to the City of Edinburgh Council citywide CCTV system as 35.9.2.

Each Tramstop platform shall be equipped with at least one Closed Circuit Television camera. Additional Closed Circuit Television cameras shall be provided if adequate coverage of the access and egress routes at Tramstops and park and ride facilities cannot be achieved using the platform Closed Circuit Television cameras. Additional Closed Circuit Television cameras shall be provided to give full coverage of Park and Ride facilities.

Images from the CCTV cameras shall be transmitted to a Digital Video Recorder where they shall be recorded and time-stamped.

The Closed Circuit Television System shall comply with the requirements outlined in the Home Office guidelines for digital CCTV and the related UK Police Guidance notes and shall provide clear images of 'evidential quality' under all weather and lighting conditions to be made available at the Control Centre for operational purposes and for the recording for evidential purposes.

The Edinburgh Tram Network Depot complex will be equipped with a digital CCTV System as part of the Depot Security System. This CCTV System shall be interfaced to the Passenger CCTV System detailed in this Section. The requirements for the Depot CCTV System are described in 29.8 - Depot Site Layout.

(Please note: As of 11/12/2007, the calculation of the number of CCTV cameras and the bandwidth required on the ODN – See 35.11 for a definition – is based on two cameras per Tramstop, plus ten cameras at the depot and none at Sub-stations. This gives a requirement for 54 new cameras. The ODN also needs to allow for 7 existing, plus two new, cameras at the Ingliston Park & Ride.

35.9.2 Technical Requirements

Cameras shall be of the dome type, vandal resistant and mounted on Tramstop infrastructure or special CCTV poles. The mounting arrangements for each camera shall ensure stability and limit any vibration to acceptable limits so as not to interfere with image quality.

CCTV cameras located at the Park and Ride facilities shall be positioned to cover all of the car park paths, locations identified for Ticket Vending Machines, shelters, buildings, any other structures and both pedestrian and vehicle access points.

The CCTV System at Park and Ride facilities shall provide a clear image of vehicles including the ability for operators to read their registration plates.

The CCTV viewing system shall normally cycle through a pre-defined list of camera images and carry this out over a pre-programmed time period.

All CCTV cameras shall be provided with pan, tilt and zoom facilities both automatically within preset limits and under manual control, and be programmed to zoom in on the Passenger Help / Passenger Emergency Help Point when they are used and to a Ticket Vending Machine location when a TVM alarm is initiated. The Control Centre Staff shall be able to override automatic operation and control the cameras.

The CCTV cameras shall incorporate configurable 'no-dwell' zones to ensure the privacy of adjacent buildings and shall be suitably adjusted at the time of camera installation.

The CCTV System shall be provided with appropriate electrical / electronic interfaces to facilitate the presentation of images to an Edinburgh Tram Network display located within the Lothian & Borders Police Centre, the Lothian Buses Control Centre (Annandale Street) and one located at the Edinburgh in View CCTV Centre. This interface will also enable the transmission of images from the CEC's CCTV system to the ETN such that an appropriate subset of the CEC's CCTV images can be viewed in the Control Centre.

These interfaces shall be physically located in the Equipment Room. They shall include the provision and installation of the necessary connections and extensions to the Tram communication system to provide the necessary interfaces to third parties, and shall remain under the control of the Edinburgh Tram Network.

The selection of individual images by any of the above mentioned third parties for their further interrogation on their local monitors shall only be provided following telephone authority being obtained by them from the Control Centre Operator and shall not inhibit the continued use or availability of images to the Control Centre Operator.

Facilities shall be provided to enable any images generated by cameras that are part of the other interconnected CCTV systems to be selected by the Control Centre Operator and displayed within the Control Centre. Facilities shall be provided to "screen print" images for expediency.

35.10 Supervisory Control and Data Acquisition

35.10.1 Overview

A Supervisory Control and Data Acquisition (SCADA) System shall be provided to monitor and control remote equipment.

The SCADA System shall comprise of a central host, which is used to scan the outlying equipment that is connected to Remote Terminal Units (RTUs) or "Intelligent Relays" shall regularly scan the attached equipment for status or to set/reset the associated controls and, in turn, will be scanned periodically by the central system. Alternatively, electronic subsystems like e.g. traction substation control & protection systems can be directly connected to overall SCADA by means of e.g. a databus or network connection.

The primary interface to the SCADA System shall be a diagram displayed to the Control Centre operators. The SCADA System shall transmit system data received, in real-time, from the RTUs to the mimic display.

The SCADA System will comprise four main functional elements as follows:

- Traction Power SCADA;
- Tramstop SCADA;
- Trackside SCADA; and
- Ticket Vending Machine alarm indications shall be transmitted via the SCADA system. Further details are contained in Employer's Requirements Integrated Fare Collection Section.

The current status of the Traction Power System as presented by the SCADA System shall be available as a display to the Control Centre Staff at all times.

35.10.2 General Requirements

The SCADA itself shall not be a safety critical system, however, it shall provide the facility for the Control Centre staff to make requests of remote equipment to execute actions on behalf of the Control Centre staff, and provide indications for sub-systems.

These sub-systems are:

- Safety related - the traction power control system and remote terminal at each substation;
- Security related - the Passenger Help / Passenger Emergency Help Points at each Tramstop together with the associated Closed Circuit Television camera; and
- Security related - The transmission of Intruder Alarms.

The SCADA system shall pass data relating to equipment failure to the Performance Monitoring System (PMS), to allow the PMS to calculate operational performance relating to equipment availability.

The implementation of the SCADA System at Tramstops and other trackside locations may use the Tram Position and Detection System hardware in lieu of a SCADA RTU for the passage of alarms and indications, should this prove to be more efficient option.

Each SCADA System RTU shall contain a minimum of 30% spare capacity for the future in addition to those specified in the sections below, for the addition of further controls and indications across the Edinburgh Tram Network.

At Tramstops the SCADA Remote Termination Units shall be housed in the Tramstop equipment cabinet with the other Tramstop Supervision, Control and Communication Equipment.

Within Substations the SCADA Control and Monitoring Modules shall be wall or cabinet mounted. SCADA Remote Termination Units shall also be installed within the Points Controller cabinet at all electrically heated points. Further details are contained in 26.11.2 of these Employer's Requirements.

It shall be assumed that the signals to be monitored and controlled by the SCADA system will be concentrated into an interface rack. Connection shall be made from the SCADA Modules to the interface rack.

Individual Tramstop systems control and communications equipments shall be designed to integrate with the Tramstop furniture wherever possible.

35.10.3 Traction Power SCADA

The Edinburgh Tram Network Traction Power Supply System has substations placed along the Edinburgh Tram Network as detailed in Employer's Requirements Traction Power (Substations) Section.

Each Traction Power Control Unit should provide as a minimum:

- 128 Digital Inputs;
- 16 Digital Outputs;
- 16 Analogue Inputs.

It shall be possible to put each substation into a bypass mode remotely by using SCADA, in order to guard against equipment and power failures or to allow maintenance.

The SCADA System shall contain a series of 'macros' that shall enable the Control Centre staff to isolate and earth all electrical sections between adjacent sub-stations or between a sub-station and the end of the Edinburgh Tram Network route by making no more than two mouse clicks, or equivalent, from the SCADA Human Computer Interface power diagram. This operation will initiate a sequence of switching operations, the progress and completion of which shall be indicated to the Control Centre staff via the SCADA Human Computer Interface power diagram. Should any operation in this sequence 'time out', or fail, a visual and audible alarm shall be generated to the Control Centre staff and the sequence be suspended by the system.

Facilities shall be provided to enable the switching sequences to be created, edited and deleted by a person with the appropriate rights of SCADA access to the system shall be provided.

The following SCADA System controls and indications provided for each substation shall include, but not be limited to:

- Fire Alarms;
- Equipment Over Temperature Alarms;
- Intruder Alarms;

- Low Voltage Power Supply Fault indication;
- DC power fault indication (e.g. output circuit failure, etc.);
- Over Voltage Trip Alarms;
- Under Voltage Trip Alarms (if Under Voltage Trips are generated);
- Line Live;
- Line Earthed;
- Stray current monitoring, if provided;
- Power data, volts and amps in real time;
- 'UPS status for communications equipment;
- Battery and Battery Charger Status;
- DNO indications;
- Status of all isolators; and
- Status of all circuit breakers and control of them.

The Edinburgh Tram Overhead Line Equipment shall be arranged such that it is possible to isolate all or parts of the overhead traction supply. Feeder and Bypass Isolators are located at the line side in electrical cabinets or within the nearest substation. Further details are available in Employer's Requirements Overhead Line and Pantograph Section.

The SCADA System controls and indications to and from these Isolators shall include:

- Control command for opening and closing of individual Bypass Feeders at each substation;
- Indication of all individual Feeder Isolator position (open / closed / earthed / indeterminate); and
- Indication and Control of all individual Bypass Isolators.

Where a Control Command is instigated by an Operator, the display shall ask him / her to confirm the action before proceeding. In any case, each Control Command shall be handled at the protocol level by a Request – Check – Confirm sequence to ensure that the possibility of the wrong control being performed is minimised. SW and HW interlocking may be realised in the traction power station by means of the substation control and protection system in each substation, which may also be required for local operation.

Information presented to the Operator shall be accurate under all feasible circumstances and shall include the status of all sub-section isolators. Manual input of the status of sub-section isolators may be proposed by Infraco with the appropriate risk analysis.

35.10.4 Tramstop SCADA

Tramstop Equipment shall be monitored by the Control Centre Operating staff via the SCADA System.

Such equipments shall include, but not be limited to:

- Operation of Passenger Help / Passenger Emergency Help Point and status;
- 'No-Break' Power Supply failure alarms;
- Communications Systems Status & Alarms;
- CCTV fault status;
- Public Address System volume level control, fault status and controls;
- Passenger Information Display fault status;
- Passenger Help/Passenger Emergency Help Point activation;
- Passenger Help/Passenger Emergency Help Point fault status;
- Tramstop equipment intruder alarms (including Fare Collection System Alarms – see below);
- Tramstop electrical supply status (including Tramstop lighting supplies).

Each Tramstop RTU should provide as a minimum:

- 64 Digital Inputs;
- 16 Digital Outputs;
- 4 Analogue Inputs.

35.10.5 Trackside SCADA

The SCADA System shall monitor trackside equipment as follows:

- Point Controls and Indications;
- Failure of Points to move within a given time of the request;
- Point Heater Controls and Indications (The Operator shall be able to command the heating of points in the event of the thermostatic control failing);
- Tram Wash equipment; and
- Sand replenishment equipment - inclusive of sand levels etc;
- Status of lift(s);
- Pumps.

It is possible that the Trackside SCADA system will share an RTU with the Tramstop SCADA system, and the trackside SCADA requirements will vary at different points along the alignment. The I/O counts are included within the Tramstop I/O count. However, note that an extra RTU will be necessary in the Depot for the specialised equipment there, for which the allowance below should be made:

- 64 Digital Inputs;
- 4 Analogue Inputs.

35.10.6 Fare Collection SCADA

Ticket Vending Machine Alarms shall be brought to the attention of the Control Centre Operating staff via the SCADA System.

The TVMs provided by **tie** shall contain normally closed relay contacts (contacts open on occurrence of fault) for the following alarms to the SCADA system, and shall include:

- TVM Vandal Alarm;
- TVM coin jam;
- TVM printer malfunction;
- TVM card unit malfunction;
- TVM tickets low;
- TVM Cash Vault(s) ¾ full;
- TVM doors open.

TVMs shall be procured by TEL and issued to Infraco for installation.

The I/O for the TVMs is already included in the count in the Tramstop SCADA.

35.11 Operational Data Network

35.11.1 Overview

An Operational Data Network (ODN) shall be provided to ensure two-way voice and data transmission to fixed locations along the entire Edinburgh Tram Network, with high reliability, availability and low latency.

The ODN shall provide the communications 'backbone' between Tramstops, substations, other remote equipment and the Depot, and shall convey data for a variety of applications including:

- Tram Positioning, Routing and Detection System;
- Passenger Information Displays;
- Telephone Network;
- Public Address;
- Operational Radio Network (optional);
- Passenger Help / Passenger Emergency Help Points;
- Closed Circuit Television;
- Point Control and Indication;
- Point Heating Control and Indication;
- Supervisory Control And Data Acquisition; and
- Ticket Vending Machines (separation of data shall be provided, one secure encoded stream for revenue, ticketing and fare collection data and the other for Ticket Vending Machine alarms, administration and management).

The ODN shall use a fibre optic transmission system. A multi-core fibre shall connect all ODN nodes.

The ODN shall include all master and outstation node equipment, interface cards, configuration of the system elements, the connecting cables and management and diagnostic facilities. Fibre optic repeaters between nodes shall not be employed.

The ODN Control Centre Node shall be equipped with sufficient communications capacity to allow the interconnection of all traction power substation nodes, Tramstop nodes point control nodes and Depot equipment.

Where appropriate, Depot subsystems shall be connected to the ODN via the secure Local Area Network.

The ODN shall support the emergency relocation of Control Centre staff to alternative location(s) served by the ODN following a Control Centre evacuation, where they will be able to continue operation of the Edinburgh Tram Network albeit in a degraded mode.

The ODN shall not be a safety critical system. However it shall convey safety or security related messages to and from the following sub-systems:

- Safety related - Traction Power Supervisory Control And Data Acquisition; and
- Security related - Passenger Help / Passenger Emergency Help Points and the associated Closed Circuit Television images;
- Security related - The transmission of Intruder Alarms.

The ODN shall provide a bandwidth sufficient for the satisfactory transfer of all data, telephone and other signals required for controlling, monitoring and communicating with equipment distributed throughout the Edinburgh Tram Network.

In addition, the associated ODN communications paths and power supplies shall themselves incorporate similar levels of redundancy / diversity.

The ODN shall be configured such that in the event of single failure there shall be no loss of data and no requirement for any immediate actions on the part of the Control Centre staff. It shall be configured so as to provide automatic re-routing in the event of failures such that any loss of facility is confined to that given locality and does not affect the operation of the transmission system and facilities at any other location.

The ODN shall incorporate the necessary degree of redundancy and duplication to enable the commitment to be achieved without losing the ability to handle faults and accept necessary upgrades.

Where there are connections or any exchange of data between subsystems, each system shall be such that any failure in another system shall not cause a failure of the system, (except in the functionality between the two systems concerned).

There shall be commonality of design between all types of ODN nodes.

The transmission latency of the ODN shall be such that it does not contribute any appreciable delay to any voice or data applications.

The ODN shall provide an expansion capability of 200% to allow for system growth or to enable further interfaces to be added or an increase in the bandwidth requirements of existing applications or known future enhancements of the Edinburgh Tram Network.

35.11.2 Location of Nodes

Remote ODN Nodes shall be located so that together they serve all locations along the alignment which require communications with the Control Centre, including Tramstops, substations, and points control and points heating cabinets. ODN nodes shall be provided at all Tramstops. Nodes shall also be provided at other locations if it not within the immediate vicinity of a Tramstop node.

Tramstop Nodes

Each Tramstop Node shall be equipped with communications interfaces to allow the interconnection of the following two-way voice or data services throughout the Edinburgh Tram Network:

- Digital Closed Circuit Television cameras and associated controls;
- Passenger Help / Passenger Emergency Help Points;
- Public Address;
- Ticket Vending Machines;
- Passenger Information Displays;
- Supervisory Control And Data Acquisition Remote Telemetry Units;
- Tram Position and Detection System Equipment; and
- Edinburgh Tram Network timeserver.

Where appropriate, a Tramstop Node shall be equipped with additional communications interfaces to allow the interconnection of the following two-way voice or data services throughout the Edinburgh Tram Network:

- Radio base station equipment or
- Other Control Centres e.g. Police. Fire, Ambulance and other Emergency Services, Traffic Control Centre.

Traction Power Substation Node

If required separately, a Substation Node shall be equipped with communications interfaces to allow the interconnection of the following two-way voice and data services throughout the Edinburgh Tram Network:

- Supervisory Control And Data Acquisition Remote Telemetry Units;
- Private Automatic Branch Exchanges extensions; and
- Edinburgh Tram Network timeserver.

Where appropriate, an ODN Substation Node shall be equipped with additional communications interfaces to allow the interconnection of the following two-way voice or data services throughout the Edinburgh Tram Network

- Digital Closed Circuit TV cameras and associated controls;
- Tram Position and Detection System equipment;
- Radio base station equipment or
- Other Control Centres e.g. Police.

Points Control Node

If required separately, a Points Cabinet Node shall be equipped with communications interfaces to allow the interconnection of the following two-way voice or data services throughout the Edinburgh Tram Network:

- Supervisory Control And Data Acquisition Remote Telemetry Units; and

- Tram Position and Detection System equipment.

Where appropriate, a Points Cabinet Node shall be equipped with additional communications interfaces to allow the interconnection of the following two-way voice or data services throughout the Edinburgh Tram Network:

- Radio base station equipment or
- Other Control Centres e.g. Police.

35.11.3 General Requirements

For all ODN nodes, the multi-core fibre shall be terminated at a fibre patch panel situated adjacent to the node.

Tramstop node equipment shall be mounted in the Tramstop Equipment Cabinet. Traction Power Substation node equipment shall be either rack or wall mounted dependent upon its location. Control Centre Node equipment shall be fitted within an equipment rack located in the Equipment Room.

The ODN shall be equipped with a Maintainers' Workstation (which may be shared with other subsystems) running a Network Management System for network management and diagnostics.

The Maintainers' Workstation shall allow the:

- Display of system status and alarms;
- Download of system logs to removable media;
- Configuration of the Operational Data Network;
- Provision for updating system software; and
- Reporting of real time status and alarms to external equipment.

The ODN maintainers' workstation shall be situated in the Equipment Room at the Control Centre.

35.12 Considerations applying to all Communications Subsystems

This sub-section details those considerations which apply to all the subsystems these are:

- Electrical Connections;
- Cabinets;
- Alarming of Faults.

35.12.1 Electrical Connections

All powered equipment described above, with the exception of the Passenger Information Display System and Ticket Vending Machine, shall be provided with a 'No-Break' power supply, via a UPS system, located in the nearest Tramstop Cabinet or Substation, as appropriate. LV Supplies will be in accordance with 33 these Employer's Requirements.

All electrical connections shall be made in such a way that the public shall not have access to any cabling. All cabling and wiring must comply with the Cabling and Ducting section of these Employer's Requirements.

The cable routes shall avoid close contact with, or interference from, high voltage electrical supplies and for this reason a 3.0 metre separation shall be achieved in any plane between any communication cable routes and high voltage electrical supplies.

Wherever practicable, communication between two or more items of trackside equipment and from trackside equipment to the Control Centre shall be by such means that permits minimal trackside cabling and an acceptable level of system integrity.

All powered equipment described in this section shall be provided with a connection to an earth. The earthing and bonding requirements are described in **tie**'s Earthing and Bonding Policy Document.

35.12.2 Cabinets

All Tramstop control equipment, forming part of the subsystems, as described above, shall be mounted in cabinets located on or adjacent to the Tramstop platforms. Within substations, cabinets may be wall or floor-mounted as appropriate. The requirements on cabinets in general are detailed in 19 of these Employer's Requirements.

35.12.3 Alarming of Faults

It is essential that malfunctioning of equipment is brought to the attention of the operators, in a unified manner, as quickly as possible. This shall be achieved through the medium of the SCADA System.

Where possible, this may be achieved through network monitoring of the subsystems, and a connection between the network monitoring system and the SCADA system. Where this is not possible, it shall be achieved through a contact connected into an RTU connected in turn to the appropriate SCADA system.

35.13 Control Centre

This describes the components of the various subsystems described above are located in the Control centre. It divides those systems into:

- Those components within the Control Centre;
- Those components within the Equipment Room.

35.13.1 Control Centre - Overview

The Control Centre shall be the focal point for the control and operation of the Edinburgh Tram Network. Its purpose shall be to provide a working place for the operational employees to manage and coordinate day-to-day activities associated with system operations. The Control Centre shall be located on the first floor of the Depot building.

The Control Centre comprises of a number of workstations, at which Control Centre staff sit and use equipment to remotely control or retrieve data from the system. The operator interface shall be designed to carry out control functions in an ergonomically efficient manner.

These workstations are:

- The Duty Manager;
- The Shift Controller;
- The Information and Security Supervisor;

- There are also two workstations that have been identified for future expansion of the system.

A Monitor Matrix shall be provided, to be positioned either on the front wall or in close vicinity to the Control Centre desks. The matrix shall be of sufficient size to be viewed by all Control Centre staff.

A typical Control Centre Layout is shown in the diagram below. This shows the Control Centre with the addition of the two workstations that have been identified for future expansion.

Figure 11 - Typical Control Centre Layout

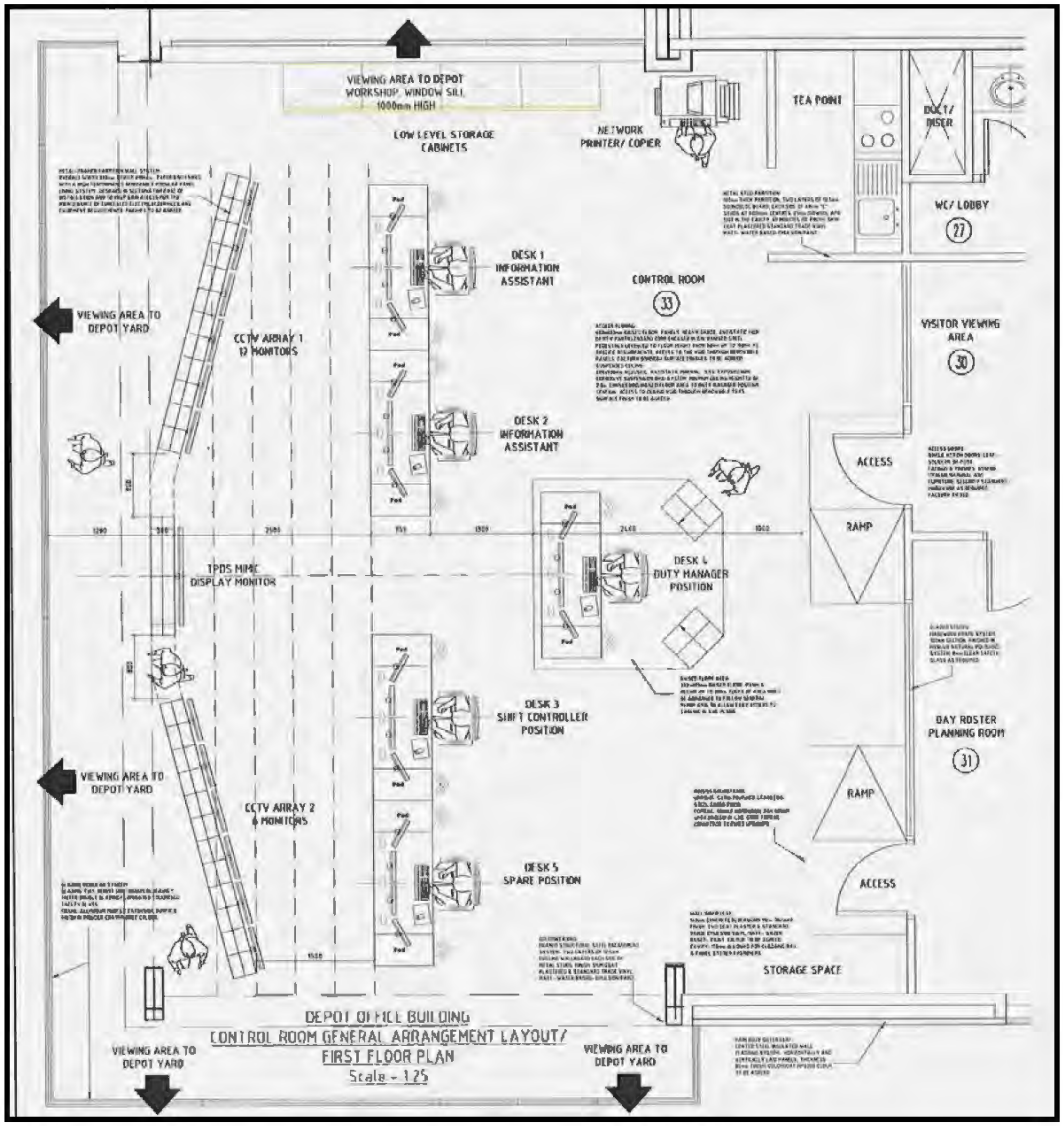

35.13.2 Workstation Capabilities

Each Control Centre Workstation shall have the capability to provide indication and control of all subsystems and services: however, it will normally be restricted by logon status to the duties normally associated with the position. The various control and monitoring capabilities are described by subsystem:

- Tram Position and Detection Subsystem;
- SCADA System;
- Operational Radio System;
- Passenger Information Displays;
- Public Address;
- Closed Circuit Television;
- Passenger Help / Passenger Emergency Help Point System;
- Telephone System.

There shall be at least three screens attached to each workstation. The three screens shall be able to form a continuous display. The status of the dynamic data shall be regularly updated, at a frequency of not less than once every five seconds.

Through the top-level diagram it shall be possible to access additional nested menus or screens to gain additional information from the subsystems and facilities.

The presentation of the menus and 'human computer interface', to the Control Centre operators, shall be subject to the approval of **tie**.

Each workstation shall be equipped with at least one keyboard, and some or all of a mouse, joystick, or touch screen capability to navigate around the screens. The keyboard (s) shall be retractable when not in use.

Differential alarm tones shall be provided for each of:

- Operational Radio Network normal calls;
- Operational Radio Network emergency calls;
- Passenger Help Point activation;
- Passenger Emergency Help Point activation;
- Internal and external telephones; and
- Emergency Telephone lines

Tram Position and Detection Subsystem

The Workstation shall present a diagrammatic representation of the entire Edinburgh Tram Network both as an overview display and a series of overlapping sectional displays

Each display shall provide the following as a minimum:

- Last known position of each tram;
- Run / Route number of each tram;
- Number of each tram;
- Punctuality of each tram;
- Driver staff identity for each tram;
- Tram in service / out of service;
- Tram destination; and
- Status of each tramway signal;
- Lie of points;
- Input a tram signal demand via the UTC system;

The Control Centre Workstation(s) controls are only intended for use when the system is disrupted, in emergencies, engineering works, equipment failure conditions, or at the run out and run in of trams to/form the depot. Under normal operating conditions the Tram Position and Detection System will automatically control signals, points and routing of the trams and without the intervention of Control Centre staff. They shall be designed in such a way as to not compromise the safe running of the tram system at any time.

SCADA System

The Workstation shall present a diagrammatic representation of the entire Edinburgh Tram Network both as an overview display and a series of overlapping sectional displays, upon which shall be displayed the control, monitoring and alarm functions associated with the following:

- Electrical Power Substation Equipment for each Electrical Supply Point, the actual position and status of circuit breakers and motorised section isolators;
- Tramstop Equipment;
- Trackside Equipment; and
- Vending Machine Alarms. Details available in Employer's Requirements, Integrated Fare Collection.

The controls and indications shall be displayed in real time and synchronised with the Edinburgh Tram Network Time system.

SCADA Alarms

All alarm events shall generate an alarm message, which shall be electronically logged and displayed to the targeted Control Centre operator.

Each alarm message shall identify the system that has generated it.

Each alarm message shall be assigned a priority level.

High priority alarms shall generate an audible tone.

Alarms shall be presented in a hierarchical manner, with sufficient gradation to ease handover between Control Centre staff.

The Control Centre staff shall have the facility to accept alarms individually or as a 'page' of alarms.

The alarm list shall have the facility to display alarms in chronological order, with the latest alarm first.

Each alarm entry shall include the date and time of occurrence, location and plant identity.

The silencing of alarms shall not inhibit the annunciation of further alarms nor constitute an acknowledgement of the alarm.

Alarm Sequence

Onset of Alarm

This shall be indicated by a flashing alarm message and sounding an audible alarm at the Workstation. There is also a simultaneous logging in the fault log and printing of the alarm on a printer situated in the equipment room.

Acknowledgement of the Alarm by the Control Centre Staff

The alarm message shall be steady, the audible alarms shall revert to a low level, and the acknowledgement shall be logged in the fault log and printed on a printer situated in the equipment room.

Acknowledgement of Reset of the Alarm by the Control Centre Staff

The reset alarm message shall be steady, the low level audible alarms shall cease, and the acknowledgement shall be logged in the fault log and printed on the Supervisory Control and Data Acquisition System printer situated in the Equipment Room.

Operational Radio System

The Workstation shall permit (preferably via a touch screen interface):

- Initiation / receipt of radio calls to any/all tram(s) and other vehicles fitted with the Operational Radio System;
- Initiation / receipt of radio calls to any/all portable radio handsets;

- Provides audible and visual alarms for emergency radio calls received. Such alarms shall be displayed so as to clearly differentiate between normal events and emergency events; and

- Use of 'short radio codes'.

Primary means of initiating radio calls to individual trams from the Control Centre staff shall be achieved by mouse click(s) on the relevant tram represented on the Tram Position Detection System display.

The attention of Control Centre staff to a tram making a radio call to the Control Centre shall be achieved by appropriate graphics symbols on both the Tram Position Detection System and Operational Radio System Human Computer Interfaces accompanied by an audible signal.

All Operational Radio System communications shall be via the Control Centre: direct calling between outstation radios is not required and shall not be available.

When an outstation user wishes to call the Control Centre, they shall insert a call request message. The Control Centre staff will then call them back.

When Control Centre staff call an outstation, the outstation radio shall 'ring' and the outstation operator shall answer the call and speak first.

All radio calls shall also be capable of being made and received via the Control Centre Workstations.
When an emergency call is received at the Control Centre, a distinct audible and visual alarm shall appear on the Workstation. It shall not be possible for a Control Centre member of staff to cancel an emergency call without answering it.

Nomenclature for tram radio call signs shall be the same as the tram number.

When Control Centre staff send a single voice message to all trams and request the tram drivers to acknowledge receipt, the radio system shall present a list of all trams and their status to the Control Centre staff via the Operational Radio System Human Computer Interface.

The status shall be coloured to identify:

- Trams that have acknowledged the message, in green;

- Trams that do not have active radios, in amber;

- Trams that have not acknowledged the message in red.

This will enable the Control Centre staff to identify any trams that have not acknowledged the call. A similar arrangement shall apply to status codes sent to trams.

The Operational Radio System shall support the emergency relocation of Control Centre staff to alternative location(s) served by the Operational Data Network following a Control Centre evacuation, where they will be able to continue operation of the Edinburgh Tram Network albeit in a degraded mode.

The system shall digitally record all outgoing and incoming radio messages.

Passenger Information Displays

The Passenger Information Display System shall be accessible to the Control Centre staff via the Control Centre Workstations.

Normally, the Platform Information Display System shall be automatically updated from the Tram Position Detection System. However, the Control Centre staff shall have the ability to display a selection of pre-recorded messages and free form text on individual Platform Information Displays or groups of displays.

Details and times of the application of pre-recorded messages and free form text shall be logged by the Central Data Recording System.

Public Address

The Control Centre staff shall have the ability to initiate and transmit direct announcements to individual Public Address System Platforms, zones or groups of zones via the Control Centre telecommunications console.

The Control Centre staff shall be able to alter the volume setting of individual Public Address System zones or groups of zones.

Details of all Control Centre staff interventions and direct announcements shall be logged by the Central Data Recording System.

Closed Circuit Television

Colour pictures shall be transmitted to the Control Centre from the Tramstops, substations, park & ride facility and surrounding areas.

The system shall normally display a continuous cycle of Closed Circuit Television. The system shall interrupt this cycle to automatically display the image of the location where a Passenger Help Point / Passenger Emergency Help Point is activated: this shall cause the relevant camera image to be transferred to the Control Centre Staff's local Closed Circuit Television display. This should be able to be overridden by the Control Centre staff. After termination of a Passenger Help / Passenger Emergency Help Point call, the associated Close Circuit Television Camera shall revert to the normal scanning sequence.

The Operator shall be able to select those images that are required to be displayed in predetermined viewing patterns on the Monitor Matrix at the front on the Control Centre near that of the support workplace. Priority of selection shall be adjustable, to be governed by the current Edinburgh Tram Network operating procedures. This shall be adjustable and the system shall allow new viewing patterns to be created, amended and deleted as required by the Control Centre staff to suit individual operational circumstances.

Operation of a Ticket Vending Machine alarm shall similarly cause the local Closed Circuit Television image to be automatically displayed on a pre-selected monitor in the Control Centre.

The selection of the camera for control shall cause the image to be transferred to the Control Centre Staff's local Closed Circuit Television display.

The Control Centre Staff shall have a joystick that shall allow control of the pan, tilt, zoom and focus camera attributes.

The Closed Circuit Television Graphical User Interface shall allow the Control Centre operator to switch any camera image to be recorded at high rate to the central data recorder, to be viewed on any monitor or his own workstation.

The control of the video switching shall be completely transparent to the user.

Location, time and date stamped recording facilities shall be activated if the emergency button is activated on a Passenger Help / Passenger Emergency Help Point, the image from the relevant camera shall be automatically routed to a designated screen in the Control Centre.

Video and textual information shall be displayed on the local display when swapped from the monitor matrix display and shall maintain camera identity, status and location.

All characters overlaid on a Closed Circuit Television image shall provide clearly legible letters and characters on a dark background. Character generation shall be separate from the video image such that the location of a camera failure can be clearly identified.

The Control Centre shall provide facilities to capture a video image displayed on the Control Centre operator's display and print the image via a high quality video printer.

Passenger Help / Passenger Emergency Help Point System

The Passenger Help / Passenger Emergency Help Points System shall be accessible to the Control Centre staff via the Control Centre Workstations for alarm presentation, and via the Control Centre telecommunications console for communication with the person initiating the alarm or help request. Activation of a Passenger Help / Passenger Emergency Help Point shall give an immediate flashing indication and associated audible alarm on all Control Centre staff workstations and the Control Centre Overview Display. If this is an Emergency Help point activation, the image of the associated CCTV camera shall be automatically called to the Monitor Matrix.

The alarm message shall be steady and the audible alarm shall be silenced upon acknowledgement by the Control Centre staff.

Upon termination by the Control Centre staff of a Passenger Help / Passenger Emergency Help Point call, the reset alarm message shall be steady.

Telephone System

There shall be a touch screen interface to the Telephone, (and Public Address and Passenger Help Point / Passenger Emergency Help Point sub-systems if not provided for otherwise) that provides for:

- Initiation / receipt of telephone calls to any / all users on the exchange provided;
- Priority and high integrity initiation / receipt of telephone calls to / from emergency services;
- Audible and visual alarms for Passenger Help Point / Passenger Emergency Help Point calls received; and
- Making of public address announcements at individual, grouped or all Tramstops and / or park & ride sites.

All Control Centre staff positions shall be identical, with functionality determined by user 'log-in'.
All voice communications to and from the Control Centre shall be recorded and be capable of being played back.

Recorded voice communications shall be stored as detailed in 35.14.14.

Emergency telephone lines shall be provided to allow contact with and from the organisations detailed in 35.13.4, regardless of any failure of the main Private Automatic Branch Exchange.

Such facilities need not necessitate individual handsets but may consider a single handset (on the relevant operator workplaces) with priority displays and call buttons.

The Workstation shall incorporate:

- Information displays: (Supervision of extensions and exchange lines);
- Call processing and routing: Traffic and console status; and
- Ability to provide user input via keyboard entry.

The Workstation shall provide:

- Interactive voice greetings and messaging;
- Advanced call monitoring;
- Line engaged signal;
- Waiting time or queuing status;
- Called / calling parties identity;
- Pre-programmed numbers;
- Hands-free / wireless operation;
- Time display, synchronised by the Time Server;
- Conference calling;
- Audio control;
- Programmable functions;
- A local loudspeaker;

- An adjustable ring tone;
- Public Address System Interface; and
- Number ID

35.13.3 Control Centre Philosophy

The Control Centre shall provide Control Centre staff, and especially the shift controller and duty manager, with clear visibility of the entrance and exit tracks and associated infrastructure of the Depot complex with the main tramway and at least one end of Depot shed tracks and stabling apron tracks.

All Workstations shall be of similar design to maintain the aesthetics of the Control Centre.

Each Control Centre Staff position shall be able to control the local lighting, so that screen light reflections shall be reduced.

The Control Centre shall provide positions for the following operations personnel:

Operations Duty Manager

The Duty Manager will be responsible for overall control of the Edinburgh Tram Network and the safety of its operation.

The Operations Duty Manager is required to 'book' Tramcrew on / off duty and needs to see crew before they take their turn of duty in order to be convinced that they are in an appropriate condition to commence duty. The Control Centre shall provide for this without the need for Tramcrew to enter the Control Centre.

The Duty Manager's workstation will be identical to all other workstations.

Operations Shift Controller

The shift controller is responsible for the minute by minute operation of the Edinburgh Tram Network ensuring service perturbation risks are minimised and Tramcrew are aware of the current state of the Edinburgh Tram Network.

Operations Information & Security Supervisor

The information & security supervisor provides support to the duty manager and shift controller by monitoring the positions of trams, monitoring and editing of Passenger Information Displays, monitoring of Closed Circuit Television and Passenger Help / Passenger Emergency Help Points. This post will also take the primary role in ensuring passenger information and security.

Duty Manager

The duty manager's work place shall be located such that he can clearly see and interact with all the operations of the Control Centre.

The duty manager's workplace shall provide facilities to monitor and control the following subsystems:

- Tram Position and Detection;
- Supervisory Control and Data Acquisition;
- Operational Radio System;
- Closed Circuit Television;
- Telephones.

Shift Controller

The operator workplace provided for the shift controller shall be a complete replica of that provided for the duty manager.

In addition, the shift controller shall be given clear visibility of the mimic display and the bank of CCTV displays located at the front of the Control Centre.

Information & Security Supervisor

The information and security supervisor workplace shall be identical to the other workstations.

Monitor Matrix

A monitor matrix shall be mounted either on the front wall or in close vicinity to the Control Centre desks. The matrix shall be of sufficient size to be viewed by all Control Centre staff.

It shall display CCTV images. Textual information shall be displayed on the displays to provide camera identity, status and location. Characters shall provide clearly legible letters and characters on a dark background. Character generation shall be separate from the video image such that the location of a camera failure can be clearly identified, and shall not be generated by the camera itself.

The Monitor Matrix shall cycle through a user-definable set of images over a period of time.

Positioning of the images or sequencing in the matrix shall reflect the geographical layout of the Edinburgh Tram Network. The sequencing and display time of these images shall be user configurable.

The Information and Security Operator shall be able to select those images that are required to be displayed in specified viewing patterns on Monitor Matrix. Priority of selection shall be adjustable, to be governed by the current Edinburgh Tram Network operating procedures. This shall be adjustable and the system shall allow new viewing patters to be created, amended and deleted as required by the Control Centre staff to suit individual operational circumstances.

When activated by the Passenger Help / Passenger Emergency Help Points System interface, the Monitor Matrix shall display the associated CCTV image for that Passenger Help/Passenger Emergency Help Point.

35.13.4 Emergency Telephone Lines

The Control Centre shall have dedicated 'direct' lines between itself and the following locations as a minimum:

- Fire Brigade Control Centre;
- Lothian & Borders Police Control Centre;
- Lothian Buses Control Centre (Annandale Street);
- Edinburgh in View CCTV Centre;

- Ambulance Control Centre;
- Airport Control Centre;
- Network Rail Edinburgh Waverley Power Signal Box;
- Network Rail Electrical Control Centre at Cathcart; and
- City of Edinburgh Urban Traffic Control.

The primary telephone interface providing these facilities shall be through the single integrated audio telecommunications device at each desk, with a secondary hand-held unit for back up. Multi facilities will not be acceptable.

Any incoming calls from emergency services shall be brought to the attention of the Control Centre staff, via messages on the display, audible alarms and / or indicators on the handsets.

All voice communications and messages critical to safe operation shall be recorded on the central data recording system.

All Control Centre communications between control-room staff shall also be recorded and stored for at least thirty-one days.

35.13.5 Local Area Network

All of the Workstations situated within the Control Centre shall be connected to a dual redundant Local Area Network, which shall in turn be connected to the Servers and Systems in the Equipment Room and thence to the Operational Data Network.

The Local Area Network cabling standard shall be category 5/5e or higher.

Each Control Centre staff position shall have two Local Area Network connections per Local Area Network and these shall be accessible through the floor mounted recessed sockets.

The Local Area Network shall accommodate the connection of further terminals for the requirements of future expansion of the Edinburgh Tram Network.

35.13.6 Control Centre Time Display

The Control Centre shall have one or more wall-mounted digital display clocks, mounted so that all Control Centre operators have full view of the displayed time.

These clocks shall show the day, date, hours, minutes and seconds.

The clocks shall be synchronised with the Rugby time signal or its successor or similar.

35.13.7 Safety Requirements

The Control Centre will not house safety critical systems, however, it will provide controls and indications for sub-systems that can be considered to be safety or security related.

These sub-systems are:

- Safety related - the Traction Power Control System and Supervisory Control and Data Acquisition at each substation;
- Security related - the Passenger Help / Passenger Emergency Help Point communications to each Tramstop; together with the associated Closed Circuit Television equipment; and
- Safety related - the Tram Position, Route Setting and Detection System.

35.13.8 Electrical Requirements

The equipment located in the Control Centre shall run from 230/240VAC 50Hz electrical supplies.

Appropriate switched mains sockets shall be located on the walls and in the floor area close to each Control Desk locations for miscellaneous mains powered equipment.

There shall be no 110VAC or 415VAC 50 Hz available in this room. Power tools which require 110VAC 50Hz shall utilise a step-down / isolation transformer to achieve this.

Each mains socket shall be rated for a current of 13A.

The Control Centre equipment shall be supported by the provision of Uninterruptible Power Supply / diverse electrical supplies, further details are available in the Employer's Requirements Depot Section. An Uninterruptible Power Supply mains distribution panel shall be available in the Control Centre to provide a fault tolerant supply for all the equipment in the room. The connection of the

equipment to the Uninterruptible Power Supply distribution panel shall be through a system which has the same standard three-pin plug and sockets as normal 240v supplies, but is differentiated from the normal supply by means of appropriate labels and/of colour.

The design shall include full details of the future capacity that shall be provided for Edinburgh Tram Network expansion, and the method proposed for the work necessary to incorporate, install and commission future extensions.

All Control Centre cables and equipment shall be identified by permanent labelling in an approved format as detailed in the overall system-wide requirements.

The system wiring shall be sized to permit a minimum of 35% increase in power consumption for any additional equipment added as part of future Edinburgh Tram Network enhancements.

The main cable entry shall be via an aperture located in the floor, which provides entry or access for cables into the equipment room.

Particular care shall be taken to ensure that Electro-Magnetic Compatibility is not degraded when cables are closely located.

Cables shall be continuously screened through the aperture in the floor.

Appropriate strain relief or clamping shall be provided.

All cables and conduits shall be clearly marked with cable identifiers or suitable permanent marking which shall last for the expected system lifespan.

Local cabling between the Control Centre and the Equipment Room ducts shall be such that new cabling shall be capable of being installed without disruption to the operations including impact on the connections to the workstations.

35.13.9 Logging

In addition to voice image and message recording, there are two additional log facilities:

- Fault log; and
- Day log.

Fault Log

An electronic fault log shall be created which shall log status messages from Supervisory Control and Data Acquisition and communications systems.

The fault log records all system faults for further investigation.

Data storage shall be provided which shall record data on a 'first in-first out' basis.

Data shall be backed up on a removable storage medium and the system shall automatically do this or notify the Control Centre operator that backup is required before overwriting.

Data shall be backed up on a removable storage medium and the system shall automatically do this or notify the Control Centre operator that backup is required before overwriting.

Fault reports shall be automatically generated.

Day Log

An electronic log of day-to-day operations shall be implemented, from which a hard copy can be generated.

35.13.10 Central Data Recording

The Control Centre shall have a means of digitally recording/replaying the following information:

- All Operational Radio System voice communications;
- All Telephone Network calls to or from the Control Centre;
- All calls via the emergency telephone lines;
- Public Address announcements;
- Closed Circuit Television images, (at variable speed controlled by the viewer);
- Textual changes to Passenger Information Display; and
- The data shall be stored on non-volatile memory storage for the purposes of review or incident investigation.

The Control Centre staff shall be able to replay the data recorder from each desk position.

Information shall be recorded in a tamper-proof manner to evidential standards and be retained for a minimum period of one month.

35.13.11 Printers

The Control Centre shall house local printers for the printing of logs of maintenance or diagnostic data or colour prints of Closed Circuit Television frames.

35.13.12 Control Centre Furniture

The Control Centre shall be furnished with modern ergonomic furniture to assist the Control Centre staff and reduce fatigue.

Each desk position shall have personal storage of a minimum of three lockable drawers. Positioning of storage shall not inhibit the work-envelopes of the Control Centre Staff.

Additional storage equipment shall be located to the sides of the Control Centre.

The design of the Control Centre furniture shall include provision for the effective management of cabling, and equipment and maintenance power supply distribution.

Each of the Control Centre staff shall have the following functionality:

- Computer / workstation with dual flat screen displays, plus retractable keyboard;
- Integrated audio communications device comprising of handset and headset for (Public Address, Operational Radio, Telephones and Passenger Help / Passenger Emergency Help Points). The Telephone System (PABX) and the Operational Radio System shall be provided separately;
- Emergency telephones;
- Local light dimming control;
- Joystick control, (movement zoom and focus of Closed Circuit Television Cameras;
- Pointing device such as a mouse or tracker ball and keyboard; and
- Passenger Help / Passenger Emergency Help Point identification display.

The integrity of Controls and Indications shall be commensurate with the extent to which safety depends upon their correct operation, in both normal and degraded modes.

35.13.13 Spare Capacity / System Expansion

Following installation of the initial Edinburgh Tram Network Control Centre System:

- All conduits, troughing, trunking, and apertures shall be only 50% full of cables;
- All multi-pin connectors shall have a minimum of 10% capacity available for expansion; and
- All multi-way termination blocks shall provide a minimum of 20% capacity for expansion.

35.14 Equipment Room

35.14.1 Overview

The Equipment Room shall be situated either directly adjacent to, or directly below the Control Centre. The primary purpose of the Equipment Room is to provide a location to house the bulk of equipment, which supports the operational monitoring, management and operation of the Edinburgh Tram Network.

The equipment shall primarily be contained in freestanding cabinets located in the Equipment Room. Cabling from the equipment exits from the cabinets and shall be routed to sub-systems located outside the Depot or routed through an aperture into the Control Centre.

Within the Equipment Room will be maintainer desks, which shall be used for maintaining equipment associated with the running of the system.

It is proposed that the Equipment Room shall house the servers which host the following systems (subject to the required performance, reliability, safety and maintainability characteristics):

- Tram Position and Detection subsystem;
- Passenger Information Display subsystem;
- Telephone Network Private Automatic Branch Exchange;
- Public Address subsystem;
- Operation Radio Network Trunking Controller and base station (if required);

- Passenger Help / Passenger Emergency Help Point subsystem;
- Closed Circuit Television subsystem;
- Matrix controller;
- Supervisory Control and Data Acquisition subsystem;
- Operational Data Network Control Central Node;
- Performance Monitoring System;
- Central Data Recording and Storage;
- Radio Clock;
- Security and Access Controller;
- Fire alarm system;
- Voice recording and playback;
- Printers (if required).

35.14.2 Maintainer's Positions

Where appropriate, a Maintainer's Workstation shall be provided for a subsystem, along with any printer. The maintainer's position shall be supplied with any additional diagnostic equipment that cannot be integrated into the maintainer's workstation as part of the suite of software. Any additional special adapters or cables and connectors shall also be provided.

35.14.3 Security and Access Control

The security and access control system shall be housed in the Equipment Room.

The security and access control system shall also monitor the entry and exit to the Equipment Room.

Abnormal or illegal entry messages shall be sent to the Control Centre. These actions shall also be logged in the central data recorder.

35.14.4 Layout

The layout of the Equipment Room shall not be detrimental to maintenance and movement of equipment.

The positioning of cabinets and equipment shall take into consideration the cable and conduit entries and exits into the room.

The maintainer's workstations shall be situated with a full view of the equipment.

35.14.5 Equipment Housings and Mounting

Where possible, the equipment shall be placed in sealed, lockable cabinets, which provide a minimum of IP34 sealing.

Where indicators or diagnostic light emitting diodes/displays are used on equipment the cabinets shall have a glass door to assist in easy viewing from the maintainer's workstation.

Wherever possible, equipment shall be rack mounted or modular to aid replacement and maintenance.

To assist with installation all cabinets and equipment shall be fitted with suitable craneage or lifting points.

35.14.6 Diagnostic, Maintenance or Offline Mode Indications

If the equipment in the Equipment Room is placed into a diagnostic, maintenance or offline mode, this shall be communicated to the Control Centre staff and shall not compromise system safety or the performance of other systems.

35.14.7 Equipment Power Supplies

All powered equipment shall be connected to an Uninterruptible Power Supply in an adjacent room. This shall deliver 230V a.c. 50 Hz or 400 V a.c. 50 Hz.

Switched mains sockets shall be located on the walls and in the floor area close to the equipment locations. Further details are available in the Employer's Requirements - Depot. There shall be provision for 110V a.c. 50Hz in this room to enable the connection of power tools and the sockets shall be clearly marked accordingly.

Each 230V ac 50Hz mains socket shall be rated for a current of 13A.

A Supply distribution panel shall be mounted to the wall to enable disconnection of supplies in the event of an emergency.

The system wiring shall be sized to permit a minimum of 25% increase in power consumption to accommodate additional equipment required for Edinburgh Tram Network expansion.

The power loading and performance characteristics of equipment shall be stated at the extremes of temperature, normal running and transient conditions.

35.14.8 Storage

The Equipment Room shall provide storage for both personal and vocational items. This shall be in the form of lockable cupboards and units.

All main data storage shall be carried out on servers or equipment located in the equipment room where access is restricted. All system or program data must be shown to be retrievable in the instance of a system re-build.

Adequate shelving and filing cabinets etc shall be provided to locate equipment, handbooks, files and storage of electronic data.

Printers and miscellaneous equipment shall be sited in the locale of the maintainers in order to afford easy access.

35.14.9 Spare Capacity / System Expansion

All conduits, troughing, trunking, or apertures shall be only 50% full of cables. All multi-way termination blocks shall provide a minimum of 20% capacity for expansion. All multi-pin connectors shall have a minimum of 10% capacity available for expansion.

Each cabinet shall only be populated up to 75% to provide additional space for system enhancements.

Cabinets containing equipment which may be affected by the future Edinburgh Tram Network enhancements shall have enough spare capacity to accommodate those changes or demonstrate that the expansion or upgrade can be achieved with the minimum amount of changes or use of personnel.

All patch panels and terminals shall have the capacity for equipment used by the future Edinburgh Tram Network enhancements.

35.14.10 Master Clock and System Clocks

Within the Equipment Room, a Master Clock System shall be installed.

The Master Clock shall source a time signal from the standard Rugby clock signal (or its successor) or similar and broadcast the time signal to all systems that require accurate time synchronisation.

The Master Clock shall broadcast the time signal over the Local Area Network or directly via wired connections to the appropriate equipment.

In the event of Rugby time signal failure the system shall continue to generate time signals based on an accurate battery-backed clock. In the event of Master Clock failure, each of the systems that require the Rugby time signal shall continue operating using their own local clock signal. The failure of the Master Clock shall be logged accordingly and displayed to the Control Centre staff.

The time shall be sent to each of the systems to allow logging to resolution of 10ms or better.

A digital display clock shall be situated in a position, which can be easily seen by the maintainers at their workstation position. The clock shall source its time from the master clock. It shall show the day, date, hours, minutes and seconds.

35.14.11 Performance Monitoring System

The Performance Monitoring System shall be connected to the equipment room Local Area Network and be accessible by all designated users with appropriate user group login and password protection.

It shall receive data from the Tram Position and Detection Subsystems and the SCADA systems, which will allow it automatically to calculate those measures of performance of the Tram Network that can be calculated automatically. The relevant Performance Measures are all of those measures that form Performance Measurement System, as set out in Schedule 6 to the Infraco Agreement. This system shall produce appropriate daily and other periodical reports in both paper and software format. The reports shall to provide a suitable audit trail for the calculation of the PMS. The detailed specification for this system shall be subject to further development with **tie** and subject to **tie**'s approval.

The Performance Monitoring System shall also be accessible remotely through a Local Area Network firewall, via the Internet.

35.14.12 Monitor Matrix Display Driver

The Monitor Matrix Controller shall receive data from the Closed Circuit Television System cameras and display the images onto the Matrix of displays in the Control Centre.

It shall be connected to the dual redundant Local Area Network and / or Closed Circuit Television System.

It shall have the capability of being expanded to accommodate the expansion of the Edinburgh Tram Network closed circuit television system.

35.14.13 Central Data Recording

The Central Data Recorder shall be housed in a cabinet separate to all other equipment. The cabinet shall be sealed and locked and have suitable tamperproof fittings. The door shall be fitted with an alarm to indicate when it has been opened, which shall be logged, printed, and displayed to the Control Centre staff.

The data shall be stored in secure manner such that no tampering can be achieved. The maintainers shall have easy access to the system in order to backup/archive data. The system shall have the capability of supporting connections to a Local Area Network based digital recording system held in the Equipment Room.

The system shall provide playback facilities within both the Control Centre and one of the administration offices.

All recorded Control Centre communications shall be time stamped to the nearest second, updated from the Edinburgh Tram Network Time Server in the Equipment Room. Recordings shall be archived to transportable media.

The archiving process shall not interrupt the recording process. The viewing of recorded Closed Circuit Television images shall not interrupt the recording of further Closed Circuit Television images.

The quality of data stored shall be suitable for legal interpretation and proceedings.

The data shall be stored on a system, which shall have the capacity to store at least thirty-one days worth of system communications, Closed Circuit Television images and text information.

Each camera shall be recorded at a minimum rate of 16 frames per second (fps): however, the images shall be recorded at a higher frame rate of 25 fps when:

- An Emergency Help point has been activated;
- A TVM alarm is detected;
- A designated zone has been entered;
- The Control Centre staff manually command the Closed Circuit Television image to be recorded.

The data shall be recorded in a circular buffer where the oldest data is overwritten by the latest data ('first in-first out') and is subject to the storage capacity of 31 days referred to above.

The data shall be stored in secure manner such that no tampering can occur.

The images shall be overlaid by security coding of time/date and location.

Freeze frame facilities shall be provided.

In the above cases, the system will interrogate the Operator at the end of every three minutes to determine whether or not the high recording rate should be continued.

The central data recorder shall provide conversion facilities to adjust the optimisation of the images but not the pictorial content.

The storage device shall provide an audible warning that the storage capacity is within 5% of capacity and that the Control Centre staff are required to archive data to a non-volatile medium.

The status of the data recorder shall be conveyed to Control Centre staff.

Each DVR shall be connected to the Operational Data Network, to allow images to be transferred between locations to allow remote viewing.

35.14.14 Voice Recording

The Equipment Room shall house a Local Area Network based digital recording system that shall record all voice communications both into and out of the Control Centre.

The Central Voice Recorder shall be housed in a cabinet separate to all other equipment.

The cabinet shall be sealed and locked and have suitable tamperproof fittings.

The door shall be fitted with an alarm to indicate when it has been opened, which shall be logged, printed, and displayed to the Control Centre staff.

The voice recordings shall be stored in a secure manner such that no tampering can be achieved. The maintainers shall have easy access to the system in order to backup / archive data.

The system shall provide playback facilities within both the Control Centre and in one of the administration offices.

All recorded Control Centre communications shall be time stamped to the nearest second, updated from the Time Server in the Equipment Room.

Recordings shall be archived to removable media.

The archiving process shall not interrupt the recording process.

The quality of data stored shall be suitable for legal interpretation and proceedings.

The voice recordings shall be stored on a system, which shall have the capacity to store at least thirty-one days worth of voice communications.

The data shall be recorded in a circular buffer where the oldest data is overwritten by the latest data ('first in-first out').

The data shall be stored in secure manner such that no tampering can be achieved.

The storage device shall provide an audible warning that the storage capacity is within 5% of capacity and that the Control Centre staff are required to archive data to a non-volatile medium.

The status of the voice recorder shall be conveyed to Control Centre staff.

35.14.15 Equipment Room Maintainer Desks

Two workstations shall be provided for the maintainers, which comprise a local display, 'man-machine interface' and keyboard to enable the interrogation of the server or other related equipment for diagnostic or maintenance purposes.

The Workstations in the Equipment Room shall be of similar design to their equivalents in the Control Centre but their users shall require a greater level of more detailed access. Such access shall be governed by password and user group membership.

The Equipment Room workstations shall comprise:

- Display, mouse and keyboard for interaction with the Tram Position and Detection System and Passenger Information Display sub-system, the Operational Radio System and the UTC sub-system, the latter via the Tram Position, Route Setting and Detection System;
- Touch screen interface to the Telephone Network, Public Address system, and Passenger Help/Passenger Emergency Help Point systems;
- Touch screen interface to the Operational Radio System;
- Displays and console for the selection and monitoring of Closed Circuit Television images from remotely located cameras;
- Display, mouse and keyboard for interaction with the Supervisory Control and Data Acquisition System; and
- Human computer interfaces for the purpose of archiving and retrieving logged data.

Each maintainer's position shall have two-off Local Area Network connections per Local Area Network and these shall be accessible through recessed sockets.

Each maintainer's position shall have a Telephone Network handset.

35.14.16 Equipment Room Local Area Network Requirements

Each of the maintainer's workstation computers situated within the Equipment Room shall be connected to a Local Area Network.

The Local Area Network cabling standard shall be category 5/5e or higher.

Each Equipment Room maintainer's positions shall have two Local Area Network connections that shall be accessible through recessed sockets.

The Equipment Room Local Area Network shall accommodate the connection of further terminals for the requirements of future Edinburgh tram Network expansion.

35.14.17 Other Systems

A repeat of the 'System Overview' display that is located in the Control Centre staff shall be made available on the Operator's Local area network, updated at least every 5 seconds. This is to enable **tie** to use this image for purposes such as for onward transmission to the TEL /Lothian Bus information centres and in the depot mess room to assist staff with timing crew changes.

36 Integrated Fare Collection

36.1 Scope

The scope of this Section of these Employer's Requirements is to define the integrated fare collection requirements that are applicable to the Edinburgh Tram Network.

36.2 Procurement

Ticket Vending Machines (TVMs) and Ticket Validators for installation at Tramstops will be 'free issued' by **tie** to the Infraco at the Depot. The Infraco shall be required to provide the necessary foundations, ducting, power supply and communications linkage to the TVM and Ticket Validator locations at the Tramstops. The Infraco shall be responsible for the installation of agreed quantities of TVMs and Ticket Validators at the agreed locations.

36.3 General Technical Specification

The hand held TVM docking stations shall be 'free issued' by **tie** to the Infraco at the Depot and the Infraco shall provide appropriate power and comms interface connections, together with appropriate racking to store and charge.

36.4 Integrated Fare Collection

tie/TEL shall be responsible for the Edinburgh Tram integrated fare collection system which shall provide passengers with tickets and ticket validation on and/or off Trams for multi modal seamless bus and Tram journeys within the confines of the Lothian Bus operational area for ticket sales and throughout the SESTRAN area for validation.

Static Ticket Vending Machines will be provided at Tramstops, and hand held ticket vending machines that can also validate tickets will be carried by an Inspector on board each Tram. The fare collection system shall consist of a number of items of equipment each providing elements of the overall System functionality.

These shall include:

- Ticket Vending Machines providing ticket purchasing facilities – these are to be provided separately to the Infraco by **tie** and 'free issued' for installation by the Infraco;
- Tramstop ticket Validators – these are to be provided separately to the Infraco by **tie** and 'free issued' for installation by the Infraco;

- Docking stations for hand-held ticket issuing and smart-card validation machines and associated support apparatus (including docking stations) – these are to be provided separately to the Infraco by **tie** and 'free issued' to the Infraco. The Infraco shall provide power and communications interface connections to the Depot local area network, together with appropriate racking to store and charge the hand held ticket machines.

The elements of the IFC system shall use the system wide communications backbone that shall be provided by Infraco to provide the wide area connections for data transfer and equipment control.

The Infraco shall provide connections for the Ticket Vending Machines and Ticket Validators to be connected locally to the communications network at Tramstops.

The Infraco shall provide a connection for the ticketing central management system to be connected to the communications network and local area operational network at the depot / operational control centre.

The Infraco shall provide for the ticketing central management system to be connected to the outside world by means of a secure IP address.

36.5 Ticket Vending Machines and Validators

36.5.1 General

There shall be a minimum of two TVMs per Tramstop. Exact numbers of TVMs and Ticket Validators are to be agreed for each Tramstop.

The Infraco shall include in the design of the Tramstops suitable foundations for the TVMs and the Ticket Validators and provide 230 volt ac power and communications links to the units as appropriate.

36.5.2 Docking Stations for Hand-Held Ticket Machines

Docking stations and chargers shall be 'free issued' by **tie** to the Infraco. The Infraco shall provide power and communications interface connections to the depot local area network, together with appropriate racking to store and charge the hand held ticket machines. These will be connected to the Central Management System.

Table 86 - Hand Held Ticket Machine Quantities

Equipment	Quantity	Comments
Docking Stations	*35*	As determined in the design and implementation phases

36.5.3 Equipment Interfaces

The following equipment interfaces are required to be provided by the Infraco:

Table 87 - System Interfaces

Interface	Interface with Discipline	Interface Definition	Interface Management
Central Management System	System wide	Integrated Fare Collection	Individual sub systems
Ticket Vending Machine	Tramstop / Buildings	Integration Fare Collection	Buildings
Ticket Vending Machine	Supervisory, Control and Communications System	Integrated Fare Collection	Supervisory, Control and Communications System
Smart Card Validators	Tramstop / Buildings	Integration Fare Collection	Buildings
Smart Card Validators	Supervisory, Control and Communications System	Integrated Fare Collection	Supervisory, Control and Communications System
Hand Held Ticket Machines	Central Internal Financial Control system and SC&C	Integrated Fare Collection	Integrated Fare Collection

The interfaces identified above will be further developed by the Infraco to include details of programme requirements for interface resolution. The detailed interfaces and management thereof will be carried out according to the system integration process for the Edinburgh Tram Network.

37 System Integration

37.1 Introduction

A tramway has many constituent parts and therefore integration is a crucial factor when designing, implementing and operating a successful tramway.

tie shall be provided by the Infraco with a totally integrated Edinburgh Tram Network with all systems, subsystems and interfaces working efficiently and harmoniously together as one and able to be operated and maintained in full compliance with the requirements of the Edinburgh Tram Network and appropriate Consents. To achieve this, the Infraco shall be responsible for successfully undertaking comprehensive co-ordination and system integration roles within the Infraco Works. The system integration responsibility shall exist throughout all phases of the Infraco Works.

This Section of the Employer's Requirements outlines these responsibilities and provides details of the extent of co-ordination and system integration.

37.2 Definitions

System Integration shall include the collation, identification, recording and management of all elements of the Infraco Works, including but not limited to, the project management, design, procurement, manufacturing, factory testing, delivery, offloading, erection, construction, equipping, testing, commissioning, system acceptance testing, shadow running, operation and maintenance of the ETN.

Such integration shall include both the 'hard' integration elements in terms of system and sub-system functionality etc and 'soft' integration elements associated with approvals and Consents, people interfaces, plans, processes and procedures, and land/property agreements.

Also included shall be the production and delivery of all associated documentation (training and maintenance manuals and "As Built" documentation), all spare parts and special tools etc to allow the safe and efficient fulfilment of all operation and maintenance obligations, including dependability criteria, for the projected life time of the Edinburgh Tram Network.

System interfaces shall mean where two or more main elements or subsystems meet or interact or are intended to meet or interact in a manner which is necessary for the expedient and necessary progress of the Infraco Works and the safe and efficient operation and maintenance of the Edinburgh Tram Network.

37.3 Principle

System Integration is a fundamental project requirement and shall include the efficient and effective leadership of the system engineering and associated processes, coordination of the processes for the design, implementation and bringing the Edinburgh Tram Network into public service, complete technical direction and configuration management of the existing system design and system and subsystem interfaces to facilitate the Infraco Works.

37.4 Inter-contract Integration, Integration of third party and free issue equipment

The Infraco shall be responsible for managing all activities required to ensure that the Edinburgh Tram Network is successfully integrated with the equipment and subsystems being provided by the Infraco Parties and others. This over-arching integration role shall include as a minimum the following activities:

- undertaking a design co-ordination system and subsystem development function between contracts;
- lead in the system integration of the ticketing machines, ticket validators and bus passenger information displays;
- lead in the system integration of the subsystems and equipment being provided under the ETN project together with, systems and equipment, such as the "free issue components" or as indicated by **tie**;
- provision of an integrated testing and commissioning plan; and
- implementation of an integrated testing and commissioning programme.

37.5 Formal Roles to be undertaken by the Infraco

37.5.1 System Design Authority

The Infraco shall be responsible for the management of the design and interface processes in respect of systems and equipment being provided under or supplied pursuant to this Agreement. The system design authority role shall be deemed to include leadership of the System engineering process, co-ordination of the design process, configuration management of the System design, System and subsystem interfaces and all associated documentation including general technical direction.

37.5.2 System Integrator

The Infraco shall perform the system integrator role with the aim of meeting the objectives of system integration as set out in this Section. This responsibility shall exist in all phases of the contract from initial requirements analysis, final sign-off of the ETN for operational use and during maintenance.

The Infraco shall be responsible for the practicalities of how the role of system integrator shall be executed, however as a minimum the role is deemed to include the management of the following activities:

- Systems assurance;
- Electromagnetic compatibility including stray current;
- Electromagnetic interference and any associated immunisation of Network Rail signalling systems or assets;
- Environmental issues – noise and vibration;
- System acceptance inclusive of testing and commissioning and training;
- Inter-contract integration;
- Third party issues and consents;
- System safety; and
- Verification and validation.

The Infraco shall:

- Produce a comprehensive system integration management plan, to be implemented and regularly updated by the Infraco throughout the duration of the Infraco Works. Such a plan shall form a fundamental part of the Infraco's overall operational & maintenance plan and design & implementation plan.
- Establish and document appropriate arrangements for the identification, management and monitoring of system integration at the scheme, system, and sub-system levels;

- Provide demonstrable assurance throughout the technical development, procurement and implementation of the ETN that the system and sub-systems form an integrated whole (both in terms of physical, functional and organisational fit, and the operation performance and dependability)

- Identify and integrate the System and all systems as defined in these Employer's Requirements. and equipment being provided under for the ETN project together with, subsystems and equipment provided by others as detailed in 37.4.

- Maintain the integrity of the scheme configuration; and

- Provide and demonstrate compliance and traceability between the scheme requirements and the design and implemented solution and evidence to support the phased and final cases for safety.

All Deliverables shall be:

- submitted in soft copy as required by **tie**;

- Produced in accordance with the ISO 9000 series and in a format approved by **tie**;

- Clearly written, without jargon, with terminology defined; figures, data, calculations and information used shall be clearly traceable and justified; all assumptions shall be stated and justified; and

- Be updated as necessary throughout the Term or as requested by **tie**.

38 Location Specific Requirements

The requirements set out in this section of the Employer's Requirements are mostly applied either system wide or common to particular elements throughout the ETN. The principal exceptions are in relation to the Depot, the Specific Agreements made during the Parliamentary process and the Third Party Agreements as detailed in Schedule 13 (Third Party Agreements). Specific requirements have been identified through the design process. These have been developed by the SDS Provider through the design process over the past years, in particular the following processes:

- The SDS design process, preliminary and detailed (still ongoing) including (in no specific order and not limited to;
- Initial briefing from **tie** and their designers from the Parliamentary stage on issues within the STAG drawings and that had arisen subsequently, either during or in parallel with the Parliamentary process;
- Consultation with CEC as Promoter/Undertaker, as Planning Authority and with their Transport function, including as Roads Authority;
- Consultation with Stakeholders, including major bodies such as BAA, RBS, New Edinburgh Limited, Network Rail and First Scotrail, Historic Scotland, the World Heritage Trust, Forth Ports, and the emergency services. Note that some of these have Agreements as referred to above, but that further consultation and the passage of time has identified additional, changed and/or more detailed requirements to those set out in the Agreements;
- Consultation with other affected landowners, who may not have specific design requirements built into Agreements, as referred to above;
- Consultation with the Operator and with TEL (including Lothian Buses);
- Consultation with HMRI;
- Consultation with other affected bodies such as SEPA, Scottish Power, and the other Utilities;
- Specific consultation with frontagers;
- Specific consultation with general interest groups, relating to e.g. environmental matters, disability issues and cycling;
- Consultations with those submitting planning applications along the tram route;

- Public consultation.

39 Project Programme

39.1 Introduction

This Section of the Employer's Requirements provides an account of the programme restrictions that will impact on the Programme. The Section also contains details of the format in which programmes should be submitted and how costs should be broken down in the Work Breakdown Sheet.

39.2 Key Dates

- Key dates in respect of the Edinburgh Tram Network and the provision of the works, services and supplies by the Infraco are set out below. The tram depot at Gogar shall be complete and commissioned ready to accept first tram delivery by the end of November 2009.

Delivery into service for Phase 1a and Phase 1b shall bein accordance with the Programme.

In addition to the Programme dates included above, there are further Programme restrictions within which Infraco must work. These are constraint dates which shall not necessarily affect the whole Works but may do so. Infraco shall take due cognisance of these and the Programme dates outlined above. The constraint dates are as listed below:

- Table of overall Programme Constraints;

Constraint	Dates
Embargos	August Embargo – from the first Sunday in August until the first Sunday in September Christmas Embargo – from the Thursday preceding the first Sunday in December until the first working day of the New Year annually
MUDFA	Latest revision of programme as agreed with **tie** through formal progress meetings.
Design	Latest revision of programme as agreed with **tie** through formal progress meetings.
Others	All other Constraints as shown in Schedule 13 – Third Party Agreements, Code of Construction Practice and Network Rail Possessions

Table 88 – Table of overall Programme Constraints

- Further working time restrictions are imposed on the Infraco by the Construction Code of Practice;

- Network Rail potential possession dates..

39.3 Basis for Programme

- Infraco shall base its programme on the project management requirements at 12 of these Employer's Requirements;

- The Work Breakdown Structure (WBS) for building and coding the programme that is to be used to develop the Infraco programme is that used in **tie**'s master programme;

- The P3e Activity Code Dictionary (Mandatory Codes as below); and

39.4 Third Party Agreements

Infraco shall include these constraints and obligations resulting from Schedule 13 – Third Party Agreements. Infraco shall demonstrate to **tie** that these constraints and obligations have been considered and resolved in the programme.

tie acknowledge their supporting role in the delivery of the obligations contained within these Third Party Agreements.

39.5 P3e Activity Code Dictionary (Mandatory Codes)

The following codes shall be used by the Infraco in the preparation and development of their programme. These codes can only be modified with the express permission of **tie**.

Activity Code		Description
Geographical Sections		
01	Section 01	Newhaven Road to Haymarket
02	Section 02	Haymarket Corridor
03	Section 03	Haymarket to Granton Square
04	Section 04	Granton Square to Newhaven Road – (Future Development)
05	Section 05	Roseburn Junction to Gogar
06	Section 06	Gogar Depot
07	Section 07	Gogar to Edinburgh Airport
08	Section 08	Ingliston Park & Ride to Newbridge – (Future Development)
Intermediate Geographical Sections		
01A		Newhaven Road (inclusive) to Foot of the Walk (exclusive)
01B		Foot of the Walk (inclusive) to McDonald Road (exclusive)
01C		McDonald Road (inclusive) to Princes Street West (exclusive)
01D		Princes Street West (inclusive) to Haymarket (exclusive)
02A		Haymarket (inclusive) - Roseburn Junction (inclusive)
03A		Roseburn Junction (exclusive) to Crewe Toll (inclusive)
03B		Crewe Toll (exclusive) to Caroline Park (inclusive)
03C		Caroline Park (exclusive) to Granton (inclusive)
04A		Granton (exclusive) to Lower Granton Road (inclusive) - Future Development
04B		Lower Granton Road (exclusive) to Newhaven Road (exclusive) - Future Development
05A		Roseburn Junction (exclusive) to Balgreen Road (inclusive)
05B		Balgreen Road (exclusive) to Edinburgh Park (inclusive)
05C		Edinburgh Park (exclusive) to Gogarburn (inclusive)
06A		Gogar Depot
07A		Gogarburn (exclusive) to Edinburgh Airport (inclusive)
08A		Ingliston Park & Ride to Newbridge North - Future Development

Sub-Section (Tram Stop)

00	Intermediate Section Wide
01	Depot
02	Depot Stop (exclusive) - Gogarburn (inclusive)
03	Gyle (exclusive) - Depot Stop (inclusive)
04	Gogarburn (exclusive) to Ingliston Park & Ride (inclusive)
05	Ingliston Park & Ride (exclusive) to Edinburgh Airport (inclusive)
06	Edinburgh Park Central (exclusive) - Gyle (inclusive)
07	Edinburgh Park Station (exclusive) - Edinburgh Park Central (inclusive)
08	Bankhead (exclusive) - Edinburgh Park Station (inclusive)
09	Saughton Road North (exclusive) - Bankhead (inclusive)
10	Balgreen Road (exclusive) - Saughton Road North (inclusive)
11	Murrayfield Stadium (exclusive) - Balgreen Road (inclusive)
12	Roseburn Junction (exclusive) to Murrayfield Stadium (inclusive)
13	Haymarket (inclusive) - Roseburn Junction (inclusive)
14	Shandwick Place (inclusive) - Haymarket (exclusive)
15	Princes Street West (inclusive) - Shandwick Place (exclusive)
16	St. Andrew's Square (exclusive) - Princes Street West (exclusive)
17	Picardy Place (inclusive) - St. Andrew's Square (exclusive)
18	McDonald Road (inclusive) - Picardy Place (exclusive)
19	Balfour Street (inclusive) - McDonald Road (exclusive)
20	Foot of the Walk (inclusive) - Balfour Street (exclusive)
21	Bernard Street (inclusive) - Foot of the Walk (exclusive)
22	Port of Leith (inclusive) - Bernard Street (exclusive)
23	Ocean Terminal (inclusive) – Port of Leith (exclusive)
24	Newhaven Road (inclusive) - Ocean Terminal (exclusive)
25	Roseburn Junction (exclusive) to Roseburn (inclusive)
26	Roseburn (exclusive) - Ravelston Dykes (inclusive)
27	Ravelston Dykes (exclusive) - Craigleith (inclusive)
28	Craigleith (exclusive) - Telford Road (inclusive)
29	Telford Road (exclusive) - Crewe Toll (inclusive)
30	Crewe Toll (exclusive) - West Pilton (inclusive)
31	West Pilton (exclusive) - Caroline Park (inclusive)
32	Caroline Park (exclusive) - Saltire Square (inclusive)
33	Saltire Square (exclusive) - Granton Square (inclusive)
34	St. Andrew's Square

Discipline Codes

ACCB	Accommodation and Boundary Works
APPR	Approvals
APPP	Prior Approvals – Detail Design
APPT	Technical Approvals – Detail Design
ARCH	Architecture
AUXI	Auxilliary Power
BLDS	Buildings
BRDG	Bridges
CECS	CEC Services
CHAR	Charette Changes
COMM	Commissioning
DASB	Design – As Builts
DEMO	Demolition
DEPO	Depot
DRAN	Drainage
EART	Earthworks / Embankments
ELEC	Electricity
ENVI	Environmental
GASS	Gas
GEOT	Geotechnical
HIGH	Highways
HMRI	Railway Inspectorate
JNCS	Junctions
LAND	Landscaping
LIGH	Lighting
MANA	Management
MECH	Mechanical
MILE	Milestones
MISC	Miscellaneous
MODL	Modelling
MULT	Multi-Discipline
NETR	Network Rail
OHLE	OHLE
OTHW	Other Works
PLAT	Platforms
POWR	Power (Traction)
ROAD	Roads / Paths / External Works

SEWR	Sewerage
SIGN	Signalling
STAK	Stakeholder
STRL	Street Lighting
STRU	Structures / Retaining Structures
SUBM	Submissions
SUBS	Sub-Stations
SURV	Surveys
SYSC	Systems Communications
SYSE	Systems Engineering
TELC	Telecoms (Including Data)
TRAM	Tram Vehicles
TRCK	Track
TRMS	Tram Stops
TROS	Traffic Order
TTRO	Temporary Traffic Order
TUNN	Underpasses / Tunnels
UTIL	Utilities
WATR	Water Supply

Phase Codes

D	DEVELOPMENT (Management)
L	LAND & PROPERTY (Management)
J	JRC (Management)
S	SDS DESIGN
ID	INFRACO DESIGN
M	MUDFA (Utilities - Construction)
A	ADVANCED WORKS (Construction)
I	INFRACO (Construction)
T	TRAMCO (Construction)
W	SYSTEM WIDE As Built Design
P	PROJECT WIDE

Scope Type Codes

O	Original Scope
A	Approved Change to Original Scope
U	Unapproved Change to Original Scope

Line Codes

00	Common
1a	Phase 1a - Airport to Newhaven Road
1b	Phase 1b - Roseburn Junction to Granton Square
02	Phase 02 - Granton Square to Newhaven Road
03	Phase 03 - Ingliston Park & Ride to Newbridge North - Future Development

40 Maintenance

40.1 Scope

The scope of this section is to define the maintenance requirements with which the Infraco must comply.

It is anticipated that the Edinburgh Tram Network will have been delivered, tested and commissioned and taken into operation in accordance with the other parts of these Employers Requirements.

The maintenance scope is to maintain the delivered Edinburgh Tram Network functionality for the Term according to this Section of the Employer's Requirements and the Agreement.

40.1.1 General

The Infraco maintenance responsibilities during the Term are detailed here and apply to both the Edinburgh Tram Network infrastructure and Trams. This section also details the Infraco's obligation to develop a maintenance strategy and plan for the Edinburgh Tram Network as a whole, for delivering a maintenance service. The strategy and plan shall include planned inspections and interventions, lifecycle replacement and response to unplanned equipment failures and damage for whatever reason. For the avoidance of doubt, in accordance with the Infraco Agreement, repair of damage due to accidents, vandalism, graffiti, theft, derailments, external influences, force majeure, and repair of damages due to improper handling or operation of the system, where this is not the responsibility of Infraco, entitles Infraco to payment for additional labour and material required in accordance with the Schedule of Agreed Prices.

In response to these requirements the Infraco shall develop a maintenance strategy to support and enable the Edinburgh Tram Network to maintain the performance standards, and a Maintenance Plan for all Infrastructure and Tram systems and elements under their responsibility, that make up the Edinburgh Tram Network. The Maintenance Plan shall be submitted to **tie** and reviewed and agreed in accordance with the Review Procedure.

The Infraco's performance in delivering effective maintenance will be measured, monitored and managed through a combination of the key performance indicators and availability criteria, and assessed by **tie** through a series of qualitative tests in accordance with the Agreement.

40.1.2 Overall Objectives

The main objective of the Edinburgh Tram Network is to provide a safe, reliable, punctual, clean, easily accessible, comfortable and environmentally friendly transport service.

The Maintenance Plan shall form part of the Infraco integrated management system. This shall also include the following objectives, procedures and processes:

- The Parties shall co-operate to achieve the aims under the Agreement;
- The Infraco shall demonstrate how it will meet the Employer's specific requirements under the Infraco Agreement, particularly the requirements for the availability of the ETN and defined sub-systems;
- The Infraco shall manage all their Infraco Parties to ensure they fulfil the requirements of their contracts;
- The Infraco shall ensure that the activities of all Infraco Parties do not compromise the operations, safety and life expectancy of the ETN;
- The Infraco shall set up and adhere to schedules and programmes for all planned work, including adherence to the relevant Operations & Maintenance Specifications and Manuals provided by Infraco;
- The Infraco shall in discharging its obligations minimise any downtime on the system for the Operator;
- The Infraco shall co-operate with **tie** and interfacing parties including the Operator, CEC, Network Rail shall co-operate and, in particular, shall support any obligations they respectively have under their safety management system;
- The Infraco shall be aware of, and be compliant with Law and standards governing operation and maintenance of tram network infrastructure, systems, equipment, and any changes thereto; and
- The Infraco shall establish and maintain lines of communication with all interfacing and affected parties by means of scheduled meetings, consultation, notices, and when required by tie publicity, in regard to maintenance works.

Each year the Infraco shall plan and undertake programmes to review and improve the levels of system availability, safety, performance, and delivery of the infrastructure and trams. The Infraco shall develop a performance improvement plan which shall be developed in conjunction with the Operator and shall be included in future issues of the infrastructure maintenance plan. Infraco shall update the Maintenance Plan in the light of operational experience and resubmit for approval in accordance with the Review Procedure in Schedule 14 of the Agreement.

The Infraco performance payment regime set out in Schedule 7 of the Agreement shall provide a financial incentive for Infraco to provide reliable systems and assets for operation and to undertake effective maintenance of the Edinburgh Tram Network.

40.2 Infrastructure Maintenance Requirements

40.2.1 Purpose

This Infrastructure Maintenance Requirements section identifies the output specification that the Infraco shall meet. This includes delivering planned preventative (cyclical), life cycle and corrective maintenance to the infrastructure of the Edinburgh Tram Network and all relevant plant and equipment for which Infraco is responsible. The Infrastructure Maintenance Plan, which shall be developed by Infraco in response to these Requirements, shall specify objective plans and specifications for maintenance from the pre-operational period and over the Term and shall contain a strategy complying with 40.2.4 of this Section. These Employer's Requirements may be reviewed as necessary during the operational period by agreement with **tie**. The Infrastructure Maintenance Requirements shall be read in conjunction with the other sections of these Employer's Requirements and with such 'as-built' technical documentation, design standards and Operation & Maintenance standards and manuals as are developed by the Infraco.

The Infrastructure Maintenance Plan shall be a fully controlled issue document. Updates shall be shown as a draft version until these are agreed by **tie**. It shall take into account all statutory, regulatory and contractual requirements in force at the time of issue.

40.2.2 Scope

The Infrastructure Maintenance Plan shall cover all maintenance activities, including but not exclusively, the response to unplanned equipment failures and damage for whatever reason, to the infrastructure, plant and equipment that make up the Edinburgh Tram Network. The following responsibilities matrix identifies the general scope for which the Infraco is responsible. The Infraco responsibility for Depot Plant and Equipment maintenance is identified in Table 83 - Depot Plant and Equipment to be Provided.

The Infraco detailed responsibilities in respect of road related obligations are contained in table 90 – Roads, structures in table 92 – Structures (as carried out by the Infraco or others) and landscaping (trees and vegetation).

Table 89 – Infrastructure and Equipment Responsibilities Allocation Matrix

Description	User Competence Assessor	Used by			Cleaned by				Maintained by				Access Controlled by			
		Infraco	Tram Maintainer	Transdev	Infraco	Tram Maintainer	CEC	Transdev	Infraco	Tram Maintainer	CEC	Transdev	Infraco	Tram Maintainer	CEC	Transdev
Tram Stop Structure																
Platform surfaces		N/A	N/A	N/A	✗	✗	✗	✓	✓	✗	✗	✗	✗	✗	✗	✓
Platform Inclined Approach		N/A	N/A	N/A	✗	✗	✗	✓	✓	✗	✗	✗	✗	✗	✗	✓
Canopy		N/A	N/A	N/A	✗	✗	✗	✓	✓	✗	✗	✗	✗	✗	✗	✓
Inside surfaces		N/A	N/A	N/A	✗	✗	✗	✓	✓	✗	✗	✗	✗	✗	✗	✓
External surfaces		N/A	N/A	N/A	✗	✗	✗	✓	✓	✗	✗	✗	✗	✗	✗	✓
Internal Roof surfaces		N/A	N/A	N/A	✗	✗	✗	✓	✓	✗	✗	✗	✗	✗	✗	✓
External Roof surfaces		N/A	N/A	N/A	✗	✗	✗	✓	✓	✗	✗	✗	✗	✗	✗	✓
Integral Lighting		N/A	N/A	N/A	✗	✗	✗	✓	✓	✗	✗	✗	✗	✗	✗	✓
Internal seating		N/A	N/A	N/A	✗	✗	✗	✓	✓	✗	✗	✗	✗	✗	✗	✓

Description	User Competence Assessor	Used by			Cleaned by				Maintained by				Access Controlled by			
		Infraco	Tram Maintainer	Transdev	Infraco	Tram Maintainer	CEC	Transdev	Infraco	Tram Maintainer	CEC	Transdev	Infraco	Tram Maintainer	CEC	Transdev
Tram Stop Furnishings																
Stop Name Signage		N/A	N/A	N/A	✗	✗	✗	✓	✓	✗	✗	✗	✗	✗	✗	✓
Static Information Signage		N/A	N/A	N/A	✗	✗	✗	✓	✓	✗	✗	✗	✗	✗	✗	✓
Guard Rails/Barriers (as applicable)		N/A	N/A	N/A	✗	✗	✗	✓	✓	✗	✗	✗	✗	✗	✗	✓
Lighting Columns		N/A	N/A	N/A	✗	✗	✗	✓	✗	✗	✓	✗	✗	✗	✗	✓
Lighting Lanterns		N/A	N/A	N/A	✗	✗	✓	✗	✗	✗	✓	✗	✗	✗	✗	✓
Litter Bins		N/A	N/A	N/A	✗	✗	✗	✓	✓	✗	✗	✗	✗	✗	✗	✓
External seating		N/A	N/A	N/A	✗	✗	✗	✓	✓	✗	✗	✗	✗	✗	✗	✓
Platform Edge White Line		N/A	N/A	N/A	✗	✗	✗	✓	✓	✗	✗	✗	✗	✗	✗	✓
Advertising Signage		N/A	N/A	N/A	✗	✗	✗	✓	✓	✗	✗	✗	✗	✗	✗	✓
Tram Stop Equipment																
CCTV Cameras		N/A	N/A	N/A	✓	✗	✗	✗	✓	✗	✗	✗	✗	✗	✗	✓
Public Address Loudspeakers		N/A	N/A	N/A	✓	✗	✗	✗	✓	✗	✗	✗	✗	✗	✗	✓
Hearing Loops		N/A	N/A	N/A	✗	✗	✗	✗	✓	✗	✗	✗	✗	✗	✗	✓
Passenger Information Displays		N/A	N/A	N/A	✓	✗	✗	✗	✓	✗	✗	✗	✗	✗	✗	✓
Passenger Alarm/Help points		N/A	N/A	N/A	✗	✗	✗	✓	✓	✗	✗	✗	✗	✗	✗	✓
Ticket Vending Machines (maintained & serviced by TEL)		N/A	N/A	N/A	✗	✗	✗	✓	✗	✗	✗	✗	✗	✗	✗	✓
Drainage (Interface defined in Table 93)		N/A	N/A	N/A	✓	✗	✓	✗	✓	✗	✓	✗	✗	✗	✗	✓

Description	User Competence Assessor	Used by			Cleaned by				Maintained by				Access Controlled by			
		Infraco	Tram Maintainer	Transdev	Infraco	Tram Maintainer	CEC	Transdev	Infraco	Tram Maintainer	CEC	Transdev	Infraco	Tram Maintainer	CEC	Transdev
Trackside Equipments																
Stop Equipment Cabinets		N/A	N/A	N/A	✔	✘	✘	✘	✔	✘	✘	✘	✘	✘	✘	✔
Stop Equipment Cabinet Equipment		N/A	N/A	N/A	✔	✘	✘	✘	✔	✘	✘	✘	✘	✘	✘	✔
Traction Isolator Cabinets		N/A	N/A	N/A	✔	✘	✘	✘	✔	✘	✘	✘	✘	✘	✘	✔
Traction Isolator Cabinet Equipment		N/A	N/A	N/A	✔	✘	✘	✘	✔	✘	✘	✘	✘	✘	✘	✔
Point Control Cabinets		N/A	N/A	N/A	✔	✘	✘	✘	✔	✘	✘	✘	✘	✘	✘	✔
Point Control Cabinet Equipment		N/A	N/A	N/A	✔	✘	✘	✘	✔	✘	✘	✘	✘	✘	✘	✔
Point Heater Cabinets, Point Heaters & Controls		N/A	N/A	N/A	✔	✘	✘	✘	✔	✘	✘	✘	✘	✘	✘	✔
Road Junction Cabinets		N/A	N/A	N/A	✘	✘	✔	✘	✘	✘	✘	✘	✘	✘	✔	✘
Road Junction Cabinet Equipment		N/A	N/A	N/A	✘	✘	✔	✘	✘	✘	✘	✘	✘	✘	✔	✘
Point Machines (including Manual Control)		N/A	N/A	N/A	✔	✘	✘	✘	✔	✘	✘	✘	✘	✘	✘	✔
OLE Contact Wire & Supports		N/A	N/A	N/A	✔	✘	✘	✘	✔	✘	✘	✘	✘	✘	✘	✔
OLE Poles		N/A	N/A	N/A	✔	✘	✘	✘	✔	✘	✘	✘	✘	✘	✘	✔
OLE Pole mounted Equipments		N/A	N/A	N/A	✔	✘	✘	✘	✔	✘	✘	✘	✘	✘	✘	✔
OLE Wall Fixings		N/A	N/A	N/A	✔	✘	✘	✘	✔	✘	✘	✘	✘	✘	✘	✔
OLE Wall fixed Equipment		N/A	N/A	N/A	✔	✘	✘	✘	✔	✘	✘	✘	✘	✘	✘	✔

Description	User Competence Assessor	Used by			Cleaned by				Maintained by				Access Controlled by			
		Infraco	Tram Maintainer	Transdev	Infraco	Tram Maintainer	CEC	Transdev	Infraco	Tram Maintainer	CEC	Transdev	Infraco	Tram Maintainer	CEC	Transdev
Tram Signal Heads (Roadside)		N/A	N/A	N/A	✗	✗	✓	✗	✗	✗	✗	✗	✗	✗	✗	✓
Tram Signal Posts (Trackside)		N/A	N/A	N/A	✗	✗	✗	✓	✓	✗	✗	✗	✗	✗	✗	✓
Tram Signals Posts		N/A	N/A	N/A	✗	✗	✗	✓	✓	✗	✗	✗	✗	✗	✗	✓
Tram Detector Loops		N/A	N/A	N/A	✗	✗	✗	✗	✓	✗	✗	✗	✗	✗	✗	✓
Lighting on OLE Masts		N/A	N/A	N/A	✗	✗	✓	✗	✓	✗	✗	✗	✗	✗	✗	✓
Trackside cable ducts		N/A	N/A	N/A	✓	✗	✗	✗	✓	✗	✗	✗	✗	✗	✗	✓
Trackside cables		N/A	N/A	N/A	✓	✗	✗	✗	✓	✗	✗	✗	✗	✗	✗	✓
Cable drawpits		N/A	N/A	N/A	✓	✗	✗	✗	✓	✗	✗	✗	✗	✗	✗	✓
Structures (Bridges, Retaining Walls etc)																
Over Bridges See Table 95 for split		N/A	N/A	N/A	✓	✗	✓	✗	✓	✗	✓	✗	✗	✗	✗	✓
Under bridges See Table 95 for split		N/A	N/A	N/A	✓	✗	✓	✗	✓	✗	✓	✗	✗	✗	✗	✓
Retaining walls		N/A	N/A	N/A	✓	✗	✗	✗	✓	✗	✗	✗	✗	✗	✗	✓
Misc Structures		N/A	N/A	N/A	✓	✗	✗	✗	✓	✗	✗	✗	✗	✗	✗	✓
Swept Path		N/A	N/A	N/A	✗	✗	✓	✗	✗	✗	✓	✗	✗	✗	✗	✓
Swept Path Markings		N/A	N/A	N/A	✗	✗	✓	✗	✗	✗	✓	✗	✗	✗	✗	✓
Track																
Trackwork		N/A	N/A	N/A	✓	✗	✗	✗	✓	✗	✗	✗	✗	✗	✗	✓
Points & Crossings		N/A	N/A	N/A	✓	✗	✗	✗	✓	✗	✗	✗	✗	✗	✗	✓
Track Drainage		N/A	N/A	N/A	✓	✗	✗	✗	✓	✗	✗	✗	✗	✗	✗	✓
Field' Stray Current Equipments		N/A	N/A	N/A	✓	✗	✗	✗	✓	✗	✗	✗	✗	✗	✗	✓

Description	User Competence Assessor	Used by			Cleaned by				Maintained by				Access Controlled by			
		Infraco	Tram Maintainer	Transdev	Infraco	Tram Maintainer	CEC	Transdev	Infraco	Tram Maintainer	CEC	Transdev	Infraco	Tram Maintainer	CEC	Transdev
Sub Stations																
Sub Station Buildings		N/A	N/A	N/A	✔	✘	✘	✘	✔	✘	✘	✘	✘	✘	✘	✔
Sub Station Equipments		N/A	N/A	N/A	✔	✘	✘	✘	✔	✘	✘	✘	✘	✘	✘	✔
Sub Station Compounds		N/A	N/A	N/A	✔	✘	✘	✘	✔	✘	✘	✘	✘	✘	✘	✔
Sub Station Parking Facilities		N/A	N/A	N/A	✔	✘	✘	✘	✔	✘	✘	✘	✘	✘	✘	✔
Stray Current Monitoring Points		N/A	N/A	N/A	✔	✘	✘	✘	✔	✘	✘	✘	✘	✘	✘	✔
Stray Current Equipments		N/A	N/A	N/A	✔	✘	✘	✘	✔	✘	✘	✘	✘	✘	✘	✔
Earthing Equipments		N/A	N/A	N/A	✔	✘	✘	✘	✔	✘	✘	✘	✘	✘	✘	✔
Trams																
Free issue' tram mounted equipments		N/A	N/A	N/A	✔	✘	✘	✘	✔	✘	✘	✘	✘	✘	✘	✔
Trams		N/A	N/A	N/A	✘	✘	✘	✔	✘	✔	✘	✘	✘	✘	✘	✔
Tram saloon & Drivers cabs		N/A	N/A	N/A	✘	✘	✘	✔	✘	✔	✘	✘	✘	✘	✘	✔
Radio																
Portable radios		N/A	N/A	N/A	✘	✘	✘	✔	✔	✘	✘	✘	✘	✘	✘	✔
Radio Base stations		N/A	N/A	N/A	✔	✘	✘	✘	✔	✘	✘	✘	✘	✘	✘	✔
Landscaping																
Soft landscaping		N/A	N/A	N/A	✘	✘	✘	✔	✔	✘	✘	✘	✘	✘	✘	✔
Hard Landscaping		N/A	N/A	N/A	✘	✘	✘	✔	✔	✘	✘	✘	✘	✘	✘	✔

Floor	Room No.	Description	User Competence Assessor	Used by			Cleaned by			Maintained by			Access Controlled by		
				Infraco	Tram Maintainer	Transdev	Infraco	Tram Maintainer	Transdev	Infraco	Tram Maintainer	Transdev	Infraco	Tram Maintainer	Transdev
Stores, Workshops and Maintenance Area															
Ground Floor Level		Stores Office Centrally located	n.a	✓	✓	✗	✗	✗	✓	✓	✗	✗	✓	✓	✗
		Heavy Store (Infraco)		✓	✗	✗	✓	✗	✗	✓	✗	✗	✓	✗	✗
		Heavy store (Tramco)		✗	✓	✗	✗	✓	✗	✓	✗	✗	✗	✓	✗
		Visitors Entrance Hall	n.a	✓	✓	✓	✗	✗	✓	✓	✗	✗	✗	✗	✓
		Workshop Cleaners Room	n.a	✓	✓	✗	✗	✓	✗	✓	✗	✗	✓	✓	✗
		Light Store (Infraco)		✓	✗	✗	✓	✗	✗	✓	✗	✗	✓	✗	✗
		Light Store (Tramco)		✗	✓	✗	✗	✓	✗	✓	✗	✗	✗	✓	✗
		Infrastructure Workshop		✓	✗	✗	✓	✗	✗	✓	✗	✗	✓	✗	✗
		Dirty Workshop / Machine Shop		✗	✓	✗	✗	✓	✗	✓	✗	✗	✗	✓	✗
		Clean Workshop (Infraco)		✓	✗	✗	✓	✗	✗	✓	✗	✗	✓	✗	✗
		Clean workshop (Tramco)		✗	✓	✗	✗	✓	✗	✓	✗	✗	✗	✓	✗
		Lobby	n.a	✓	✓	✗	✗	✗	✓	✓	✗	✗	✓	✗	✗
		Male Toilets	n.a	✓	✓	✗	✗	✗	✓	✓	✗	✗	✓	✗	✗
		Male Showers	n.a	✓	✓	✗	✗	✗	✓	✓	✗	✗	✓	✗	✗
		Female Toilets	n.a	✓	✓	✗	✗	✗	✓	✓	✗	✗	✓	✗	✗
		Female Showers	n.a	✓	✓	✗	✗	✗	✓	✓	✗	✗	✓	✗	✗
		Staff Corridor	n.a	✓	✓	✓	✗	✗	✓	✓	✗	✗	✗	✗	✗
		Infrastructure Admin	n.a	✓	✗	✗	✗	✗	✓	✓	✗	✗	✓	✗	✗
		Maintenance (Tramco) Admin	n.a	✗	✓	✗	✗	✗	✓	✓	✗	✗	✗	✓	✗
		First Aid	n.a	✓	✓	✓	✗	✗	✓	✓	✗	✗	✗	✗	✓
		Switchroom		✓	✗	✗	✓	✗	✗	✓	✗	✗	✓	✗	✗
		Infrastructure Manager	n.a	✓	✗	✗	✗	✗	✓	✓	✗	✗	✓	✗	✗
		Maintenance (Tramco) Manager	n.a	✗	✓	✗	✗	✗	✓	✓	✗	✗	✗	✓	✗
		Store Room (Cleaners?)	n.a	✓	✓	✗	✗	✗	✓	✓	✗	✗	✗	✗	✗
		Staff Entrance Hall	n.a	✓	✓	✓	✗	✗	✓	✓	✗	✗	✗	✗	✓
		Drying Room	n.a	✓	✓	✗	✗	✗	✓	✓	✗	✗	✓	✓	✗
		Tram Batteries		✗	✓	✗	✗	✓	✗	✓	✗	✗	✗	✓	✗
		Equipment Room		✓	✗	✗	✓	✗	✗	✓	✗	✗	✓	✗	✗
		UPS Room		✓	✗	✗	✓	✗	✗	✓	✗	✗	✓	✗	✗
		Compressor Room - Air tools		✓	✗	✗	✓	✗	✗	✓	✗	✗	✓	✗	✗
		Tram Maintenance Area		✗	✓	✓	✗	✓	✗	✓	✗	✗	✗	✓	✗
		Maintenance Area Transit Zone		✓	✓	✓	✗	✓	✗	✓	✗	✗	✗	✓	✗
		Inspection Pits		✗	✓	✗	✗	✓	✗	✗	✓	✗	✗	✓	✗
First Floor office accommodation			n.a	✗	✗	✓	✗	✗	✓	✓	✗	✗	✗	✗	✓
Furnishings - Used, Cleaned, Maintained and Controlled as appropriate															
Chairs, Desks, Tables, Filing cabinets etc			As Appropriate	✗	✗	✓	✗	✗	✓	✓	✓	✓	✓	✓	✓
Kitchen and Catering Equipment				✗	✗	✓	✗	✗	✓	✓	✓	✓	✓	✓	✓
Reception Desk & Furnishings				✗	✗	✓	✗	✗	✓	✓	✓	✓	✓	✓	✓
Control Room Furnishings				✗	✗	✓	✗	✗	✓	✓	✗	✓	✗	✗	✓
Lockers, Coat Rails etc				✗	✗	✓	✗	✗	✓	✓	✓	✓	✓	✓	✓
Training Room furnishings (Projector, Screen etc)				✗	✗	✓	✗	✗	✓	✓	✓	✓	✓	✓	✓
External															
Depot Yard				✗	✗	✓	✗	✗	✓	✓	✗	✗	✗	✗	✓
Depot Stabling Area				✗	✗	✓	✓	✓	✓	✓	✗	✗	✗	✗	✓
Electrical Sub Station				✓	✗	✗	✓	✗	✗	✓	✗	✗	✓	✗	✗
Power Energy Building (Electric, Gas etc)				✓	✗	✗	✓	✗	✗	✓	✗	✗	✓	✗	✗
Depot Car Park				✗	✗	✓	✗	✗	✓	✓	✗	✗	✗	✗	✓

Description	User Competence Assessor	Used by			Cleaned by				Maintained by				Access Controlled by			
		Infraco	Tram Maintainer	Transdev	Infraco	Tram Maintainer	CEC	Transdev	Infraco	Tram Maintainer	CEC	Transdev	Infraco	Tram Maintainer	CEC	Transdev
Miscellaneous																
Communication & Control links		N/A	N/A	N/A	✗	✗	✗	✗	✓	✗	✗	✗	✗	✗	✗	✓

LEGEND	
	Provided by Tram Maintainer
	Provided by the Infraco
✓	Responsible
✗	Not Responsible

Table 90 – Roads

Task or Activity	Sub-heading	Maintenance Works to be undertaken by:	Frequency	Minimum Response Time	Comments
Defects reporting CLARENCE, walking surveys, etc	Rail and rail containment	Infraco			Sharing of information between CEC & Infraco call centres.
	Tram Stops	Infraco			
	Overhead Line Equipment	Infraco			
	Tram duct access chambers	Infraco			
	Tram vehicle detection loops	Infraco	-	-	All part of the routine 28 day inspection, work arising dealt with below
	Non-tram vehicle detection loops	CEC	1 working hour		
	Temporary tram signs	CEC	28 days	-	
	Coloured/textured surfacing for tram	CEC	28 days	-	
	All other road related defects	CEC	28 days	-	
Defect repairs	Rail and rail containment	Infraco			
	Tram Stops	Infraco			
	Overhead Line Equipment	Infraco			
	Tram duct access chambers	Infraco			
	Tram vehicle detection loops	Infraco			
	Temporary tram signs	Infraco			
	Coloured/textured surfacing for tram	CEC		3 months	Resurfacing only to be undertaken when it is agreed that it is required.
	All other road related defects	CEC	-	Emergency* (7 days) Non Emergency (3 months)	* Likely to result in injury (CEC liability, conscious decision by CEC on timescale)
Signals	Tram detection loops and cable to the UTC controller	Infraco		1hr	
	Traffic and tram signal equipment	CEC		4hrs	24 hr response already contracted by CEC.

Task or Activity	Sub-heading	Maintenance Works to be undertaken by:	Frequency	Minimum Response Time	Comments
	Traffic detection	CEC		4hrs	
	CEC Traffic Control Centre	CEC		5mins	Telephone contact with CEC Control Centre except when this is unmanned when Tram control will be able to make a junction call themselves.
Lighting	On OLE poles	Infraco		* 2hr	Response required when 6 or more adjacent lights fail.
	Platforms	Infraco		* 1hr	Response required when 2 or more adjacent lights fail.
	Street Lighting	CEC		* 2hr	Response required when 6 or more adjacent lights fail.
	All other illuminated road signs and bollards	CEC		28 days	
Winter Maintenance	Roads	CEC		* 2hrs	
	Cycleways/footways	CEC		* 2hrs	
	Platforms on-street	CEC		* 2hrs	
	Platforms off-street	Infraco		* 2hrs	
Removal of obstructions	On road/footway including non-segregated tramway path, platforms and platform ramps	CEC		* 1hr	May involve Lothian and Borders Police
	On tramway (segregated sections)	CEC		*1hr	
	On platform (segregated sections)	CEC		*1hr	
CCTV	For roads	CEC		28 days	
	For tram	Infraco		2 days	

Table 91 – Roseburn Corridor

Task or Activity	Sub-heading	Maintenance Works to be undertaken by:	Frequency	Minimum Response Time	Comments
Defects reporting CLARENCE, walking surveys, etc	Cycleway/footway	CEC	28 days		
	Retaining walls	CEC	28 days		
	Lighting	CEC	28 days		
	Embankment/cutting and its vegetation	CEC	28 days		
	Kick-rail	Infraco			Demarcation between areas
	Fencing – between cycleway/footway and	Infraco			
	tramway - all other fencing	CEC			
	Noise Barriers	Infraco			If required and do not form a part of the perimeter fencing.
	Grass track	Infraco			
	Drainage	Infraco			
	Tram Stops	Infraco			
	Overhead Line Equipment	Infraco			
	Tram duct access chambers	Infraco			
	Tram vehicle detection loops	Infraco			
	Temporary tram signs	Infraco			
	Coloured/textured surfacing for tram	Infraco			
Defect repairs	Cycleway/footway	CEC		Emergency* (7 days) Non Emergency (3 months)	
	Retaining walls	CEC			
	Lighting	CEC			

	Embankment/cutting and its vegetation	CEC			
	Kick-rail	Infraco			
	Fencing	Infraco			
	Noise Barriers	Infraco			
	Grass track	Infraco			
	Drainage	Infraco			
	Tram Stops	Infraco			
	Overhead Line Equipment	Infraco			
	Tram duct access chambers	Infraco			
	Tram vehicle detection loops	Infraco			
	Temporary tram signs	Infraco			
	Coloured/textured surfacing for tram	Infraco			
Winter Maintenance	Cycleways/footways	CEC		* 2hrs	
	Platforms	Infraco		* 2hrs	
Removal of obstructions	On cycleway/footway	CEC		* 1hr	May involve Lothian and Borders Police
	On tramway and platform	Infraco		* 1hr	
CCTV	At Tramstops	Infraco		2 days	

Table 92 – Structures

Task or Activity	Sub-heading	Maintenance Works to be undertaken by:	Frequency	Minimum Response Time	Comments
Structures	S01 Roseburn Terrace Bridge Existing structure to carry trams and cycles	CEC			CEC to be responsible for the ongoing structural maintenance. Infraco will be responsible for day-to-day maintenance (see Definitions below). Existing deck to be removed by the Infraco and fascia to be incorporated within new structure. The existing abutments will be retained to support the embankments but will not support the new bridge deck. Inspection report available. No major defects noted that would present a future maintenance liability.
	S02 Coltbridge Viaduct Existing structure to carry trams and cycleway	CEC			CEC to be responsible for the ongoing structural maintenance. Infraco will be responsible for day-to-day maintenance. Existing structure has been inspected (inspection report available) and assessed. The existing structure will carry the proposed tramway with a new steel walkway attached to the western elevation. Any defects noted during the inspection will be rectified by the Infraco during the construction of the walkway and new deck slab.

Task or Activity	Sub-heading	Maintenance Works to be undertaken by:	Frequency	Minimum Response Time	Comments
	S03 St George School Access Bridge Existing road bridge over tram	CEC			CEC to be responsible for the ongoing structural maintenance (if CEC own it). Infraco will be responsible for day-to-day maintenance. Existing structure has been inspected (inspection report available) but no assessment has been undertaken as the structure provides vehicular access over the proposed tramway.
	S04 St George School footbridge Existing footbridge over tram	CEC			CEC to be responsible for the ongoing structural maintenance (if CEC own it). CEC to be responsible for polycarbonate sheets. Existing structure has been inspected (inspection report available) but no assessment has been undertaken as the structure provides pedestrian access over the proposed tramway.
	S05 Ravelston Dykes Bridge Existing bridge over tram	CEC			CEC to be responsible for the ongoing structural maintenance. TEL will be responsible for day-to-day maintenance. Existing structure has been inspected (inspection report available) but no assessment has been undertaken as the structure provides vehicular access over the proposed tramway.
	S06 Craigleith Drive Bridge Existing bridge to carry trams and cycles	CEC			CEC to be responsible for the ongoing structural maintenance. Infraco will be responsible for day-to-day maintenance. The structure have been inspected (report is available) and assessed. The structure has capacity to carry the proposed tramway. No major defects were noted.

Task or Activity	Sub-heading	Maintenance Works to be undertaken by:	Frequency	Minimum Response Time	Comments
	S07 Holiday Inn Access Bridge Existing road bridge over tram	CEC			CEC to be responsible for the ongoing structural maintenance. Infraco will be responsible for day-to-day maintenance. Existing structure has been inspected (inspection report available) but no assessment has been undertaken as the structure provides vehicular access over the proposed tramway.
	S08 Queensferry Road Bridge Existing road bridge over tram	CEC			CEC to be responsible for the ongoing structural maintenance. Infraco will be responsible for day-to-day maintenance. Existing structure has been inspected (inspection report available) but no assessment has been undertaken as the structure provides vehicular access over the proposed tramway.
	S09 Groathill road South Bridge Existing bridge to carry trams	CEC			CEC to be responsible for the ongoing structural maintenance. Infraco will be responsible for day-to-day maintenance. The structure have been inspected (report is available) and assessed. The structure has capacity to carry the proposed tramway. No major defects were noted.
	S10 Telford Road Bridge Existing road bridge over tram	CEC			CEC to be responsible for the ongoing structural maintenance. Infraco will be responsible for day-to-day maintenance. Existing structure has been inspected (inspection report available) but no assessment has been undertaken as the structure provides vehicular access over the proposed tramway.

Task or Activity	Sub-heading	Maintenance Works to be undertaken by:	Frequency	Minimum Response Time	Comments
	S11 Drylaw Drive Bridge Existing bridge to be demolished				Structure to be demolished by the Infraco.
	S12 Crewe Road Gardens Bridge Existing road bridge over tram	CEC			CEC to be responsible for the ongoing structural maintenance. Infraco will be responsible for day-to-day maintenance. Structure to be extended by the Infraco over the proposed tramway. No inspection or assessment has been undertaken. A full set of construction drawings for the structure were provided.
	S16 Victoria dock Entrance Bridge Existing bridge carrying to carry trams and general traffic	CEC			CEC to be responsible for the ongoing structural maintenance. Infraco will be responsible for day-to-day maintenance. An inspection of the structure was undertaken (inspection report is available), however, no assessment has been undertaken to date.
	S17 Tower Place Bridge Existing bridge carrying to carry trams and general traffic	CEC			CEC to be responsible for the ongoing structural maintenance. Infraco will be responsible for day-to-day maintenance. An inspection of the structure was undertaken (inspection report is available), however, no assessment has been undertaken to date.

Task or Activity	Sub-heading	Maintenance Works to be undertaken by:	Frequency	Minimum Response Time	Comments
	S18 Leith Walkway Railway Bridge Existing	Network Rail			The structure has been inspected and assessed (reports are available). The structure has capacity to carry the proposed tramway. The major defected noted during the inspection, leaking water main, has now been rectified. However, the next routine inspection should confirm that no adverse affects have occurred to the substructures.
	S19 Haymarket Station Viaduct New	CEC			CEC to be responsible for the ongoing structural maintenance. Infraco will be responsible for day-to-day maintenance.
	S20 Russell Road Bridge New	Infraco			Infraco to be responsible for all maintenance.
	S21A Roseburn Street Bridge New	Infraco			Infraco to be responsible for all maintenance.
	S21B Murrayfield Stadium Retaining Wall New	Infraco			Infraco to be responsible for all maintenance.
	S21C Murrayfield Stadium Underpass New	Infraco			Infraco to be responsible for all maintenance.
	S21D Murrayfield Training Pitches R/W New	Infraco			Infraco to be responsible for all maintenance.

Task or Activity	Sub-heading	Maintenance Works to be undertaken by:	Frequency	Minimum Response Time	Comments
	S21E Water of Leith Bridge New	Infraco			Infraco to be responsible for all maintenance.
	S22 Balgreen Road Bridge New	Infraco			Infraco to be responsible for all maintenance.
	S23 Carrick Knowe U/B New bridge carrying trams and cycles	CEC			CEC to be responsible for the ongoing structural maintenance. Infraco will be responsible for day-to-day maintenance.
	S24 Saughton Road Bridge Existing WEBS bridge	Infraco			Infraco to be responsible for all maintenance. This structure was constructed as part of the WEBS project. Full construction drawings were supplied to ensure that the structure is integrated into the tram system without any modification. An assessment report confirming this is available.
	S25 Broomhouse Road Bridge Existing WEBS bridge	Infraco			Infraco to be responsible for all maintenance. This structure was constructed as part of the WEBS project. Full construction drawings were supplied to ensure that the structure is integrated into the tram system without any modification. An assessment report confirming this is available.
	S26 South Gyle Access Bridge New tram only bridge	Infraco			Infraco to be responsible for all maintenance.

Task or Activity	Sub-heading	Maintenance Works to be undertaken by:	Frequency	Minimum Response Time	Comments
	S27 Edinburgh Park Station Bridge New tram only bridge	Infraco			Infraco to be responsible for all maintenance.
	S28 A8 Underpass New	Infraco			Infraco to be responsible for all maintenance.
	S29 Gogar Burn Bridge New	Infraco			Infraco to be responsible for all maintenance.
	S30-31-34 Gogar Culverts New	Infraco			Infraco to be responsible for all maintenance.
	S32 Depot Access Bridge New road bridge over tram	CEC			CEC to be responsible for the ongoing structural maintenance. Infraco will be responsible for day-to-day maintenance.
	S33 No longer required				
	W01 Lindsay Road Retaining Wall New	CEC			CEC to be responsible for the ongoing structural maintenance. Infraco will be responsible for day-to-day maintenance.
	W02 Ferry Road Retaining Wall New	CEC			CEC to be responsible for the ongoing structural maintenance. Infraco will be responsible for day-to-day maintenance.
	W03-04 Russell Road Retaining walls 1&2 New	Infraco			Infraco to be responsible for all maintenance.

Task or Activity	Sub-heading	Maintenance Works to be undertaken by:	Frequency	Minimum Response Time	Comments
	W08 Baird Drive Retaining wall New	Infraco			Infraco to be responsible for all maintenance.
	W09 Balgreen Road Retaining wall 1 New	Infraco			Infraco to be responsible for all maintenance.
	W11 Bankhead Drive Retaining. Wall New	Infraco			Infraco to be responsible for all maintenance.
	W14 & W15 Gogar Burn Retaining Walls New	Infraco			Infraco to be responsible for all maintenance.
	W16 A8 Retaining Wall New	Infraco			Infraco to be responsible for all maintenance.
	W17 Depot Internal Retaining Walls New	Infraco			Infraco to be responsible for all maintenance.
	W18 Murrayfield Tramstop Retaining Wall New	Infraco			Infraco to be responsible for all maintenance.
	W19 Gyle Stop Retaining Wall New	Infraco			Infraco to be responsible for all maintenance.

Task or Activity	Sub-heading	Maintenance Works to be undertaken by:	Frequency	Minimum Response Time	Comments
	W100 Roseburn Corridor Retaining. Structures New	CEC			CEC to be responsible for the ongoing structural maintenance. Infraco will be responsible for day-to-day maintenance.

Clarification of terms used in Tables 89 to 92 inclusive of the Employers Requirements.

Tram Stop:
Shall comprise: shelters, lighting, passenger information, platform and ramps including the paving, kerbing/cope and soft landscaping, drainage, cleansing and waste removal, seats, cycle racks (where these are directly associated with the tramstop, ticket machines and waste bins).

Rail and Rail Containment

Shall comprise: the rail and rail drainage (up to the point where this ties in to existing road drainage), and the structural elements that contain its permanent placement, and any associated road repairs where these are a consequence of the tramway maintenance. In the case of Roseburn Corridor it shall also include the grass track, up to and including the kick-rail and fencing separating the tramway from the cycleway/footpath.

Overhead Line Equipment

Shall comprise: the pole, the overhead power line and any necessary equipment to allow the permanent placement of the overhead power line.

Tram duct access chambers

Shall comprise: chamber/manholes and permanent covers to access points to the tram related duct access points along the route.

Temporary tram signs

Shall comprise: traffic signs, including temporary speed restriction signs, which are erected from time to time for limited periods over and above permanent tram signs.

Coloured/textured surfacing for tram

Shall comprise: specialist coloured and textured surfacing, including skid-resistant and edge demarcation surfacing, which is laid specifically for hazards directly associated with the tram track over and above that required for general traffic.

Grass Track

Shall comprise: the rail and rail drainage and the structural elements that contain its permanent placement, and any associated repairs, all within the boundaries defined by kick-rails and/or fence/retaining walls.

Structures

"Day-to-day" maintenance of structures will comprise cosmetic treatments including cleaning, the removal of graffiti and localised repairs of paintwork where this is required as a result of graffiti removal.

"Structural maintenance" of any structures will comprise renewal of waterproofing and associated road surfacings; repairs to brickwork, masonry, concrete or steel; repairs to facings and cladding; repair and/or replacement of bearings; repairing 3rd party damage; and any other maintenance activity not mentioned in the "day-to-day" activities above. Where this will require the removal of the rails or its containment is required prior to the structural maintenance then this will be undertaken in all instances by Infraco and reinstated upon completion of the works.

Where activities are the obligation of the Infraco or the Infraco's Sub-contractors, or the Infraco is supporting other parties' roads, structures and Roseburn Corridor obligations, Infraco shall ensure that such obligations are fulfilled, to ensure the safety of the Edinburgh Tram Network is not degraded and that the ability of Infraco, Tram Maintainer, **tie** and the Operator to achieve their objectives is not frustrated.

40.2.3 Maintenance Approach

The approach to maintenance of the Edinburgh Tram Network (**"ETN"**) shall be as follows:

- All day to day maintenance and inspection activities and planned life cycle renewals and refurbishments shall be planned, organised, undertaken and safely handed back to the Operator in an operational condition as required by the Infrastructure Maintenance Plan and the specifications (against which the ETN is built) and procedures;

- All activities carried out under the scope of the Infrastructure Maintenance Plan shall be the responsibility of the Infraco manager responsible for the maintenance obligations;

- All day to day maintenance, inspection activities and life-cycle replacement works shall be carried out in accordance with agreed procedures and method statements, in the knowledge of, and in liaison with, the Operator;

- Infraco will maintain system interfaces (e.g. Wheel / Rail or Pantograph / OLE), to the best effect for the ETN as a whole.

- Maintenance and life-cycle replacement works shall be classified as planned or unplanned activities arising from condition assessment which has been determined by planned inspection and testing;

- Unplanned maintenance activities shall include rapid response to unplanned equipment failure and damage from whatever cause, and shall be monitored in accordance with the fault rectification times. The approach to each of these categories will be different but there shall be two managers (the Tram Maintainer and the Infraco, with one to be designated as the lead manager) liaising with the Operator's engineering manager, who are responsible for undertaking works in their area of responsibility. These managers shall be able to call upon the services of contractors to carry out all or part of these works.

40.2.4 Maintenance Strategy

Preventative Maintenance

The Infraco shall schedule interventions such that all components that make up the infrastructure shall be subject to checks, repairs and conditioning treatments in order to maximise the asset and component lives, and in advance of critical tolerances being reached which would have affected operation, or have reduced their performance in the service for which they were designed.

Two types of preventative maintenance shall be undertaken:

- Systematic preventative maintenance that follows a predetermined schedule based upon time, usage and data gained through operational and maintenance experience such as:

  - Condition inspection and safety checks; for example, grooves for excessive wear, damage, or debris;

  - Cleaning of equipment and drains;

  - Functional tests to reveal faults; and

  - Adjustments to enable optimum operation.

- Conditional preventive maintenance including carrying out planned inspections to establish if the performance or operation of infrastructure sub systems are within pre-determined measurable parameters such as:

  - Vibration and noise levels ;

- Temperature thresholds in substation transformers etc.;
- Wear limits on rail, and wire height and stagger, etc.;
- Including non-destructive testing as appropriate; and
- Points operation times and geometric limits.

The Infraco shall take the necessary corrective maintenance action arising as a consequence of the conditions where these are out of tolerance.

Reactive and Fault Correction Maintenance

The Infraco shall repair or change damaged or faulty equipment, following the observation of any failures and/or the occurence of incidents. This involves two kinds of intervention:

- Breakdown in service requiring specific intervention shall be limited to re-establishing safe, robust and sound operating conditions. This shall require a specific intervention, to be carried out by Infraco staff within the limits of the equipment and operating rules and procedures agreed with the Operator and **tie**.
- Repairs: this covers interventions that shall be undertaken following incidents or failures that occur in operation, potentially involving a longer stoppage of equipment including overhauls of parts of a sub-system or section of the line. This is an intervention of lasting character, carried out by maintenance staff or contractors. After repair, if equipment has been replaced, then it shall conform to its original specifications or such alternative standards as agreed with **tie**; or in the event that the equipment is reconditioned then it shall conform with allowable tolerances.

Response times for reactive and fault correcting maintenance will be based on the potential impact of the incident or failure. A response to an incident is to be initiated within the time limits specified in Clause 52 of the Agreement. Fault Correction times are detailed in the table on the following page.

Table 93 - Fault Correction Requirements

Fault category	Correction Time Limit Between 06:01-22:00	Correction Time Limit Between 22:01-06:00	Description
1	1 hour to attend and make safe and functional. 2 hours to Breakdown Intervention	2 hours to attend and make safe and functional. Rectified by 07:30	Critical issue such as Health & Safety risk, or failure halting the operation of the tram network in whole or part thereof, failure of major system
2	2 hours	3 hours	Failure impacting the punctuality of the tram network, or having potential to impact.
3	8 hours	9 hours	Failure or incident not having immediate impact on network operation, but impacting the quality of the Transport Services as monitored by the Edqual Service elements in Schedule 7 of this Agreement
4	1 week	1 week	Failure or incident not impacting network operation, nor quality of the Transport Services as monitored by the Edqual Service elements in Schedule 7 of this Agreement
Tramstop lighting Fault	2 days	2 days	
Tramstop telephone Fault	3 days	3 days	
Fault causing the lift at Murrayfield Tramstop or depot to be out of operation	6 hours	6 hours	

Fault category	Correction Time Limit Between 06:01-22:00	Correction Time Limit Between 22:01-06:00	Description
Tramstop electronic passenger information display Fault	2 days	2 days	
Tramstop PA system Fault	24 hours	24 hours	
Tramstop CCTV Fault	2 days	2 days	
Defect, fault or other disrepair that restricts access to all or part of a Tramstop or otherwise interferes with its use	1 day	1 day	
Defect, fault or disrepair causing a trip hazard at an Tramstop (including unintended changes of floor levels or protrusions from the floor of more than 25mm)	24 hours	24 hours	
Defect degrading system access to	6 days	6 days	

Fault category	Correction Time Limit Between 06:01-22:00	Correction Time Limit Between 22:01-06:00	Description
below DDA requirements			
Broken glass at a Tramstop or the depot	2 hours	2 hours to attend, make safe and functional. Rectified by 07:30	
Overflowing / damaged gutter at a Tramstop or the depot	24 hours	24 hours	
Structural defect, fault or other disrepair at a Tramstop or the depot	28 days	28 days	
Any other defect, fault or other disrepair at a Tramstop or the depot (including in relation to shelters, seats, canopies, signage, cycle parking, litter bins and poster cases) but excluding blocked	5 days	5 days	

Fault category	Correction Time Limit Between 06:01-22:00	Correction Time Limit Between 22:01-06:00	Description
drains, overgrown vegetation and fencing faults.			
Blocked drain other than on a street running section of the Edinburgh Tram Network System	24 hours	24 hours	
Blocked drain on a street running section of the Edinburgh Tram Network System	2 hours	By 07:30 if notified between 22:01 and 05:30	
Overgrown vegetation	3 days	3 days	
Defect, fault or disrepair fencing such that access to the track or buildings and equipment is not prevented	6 hours	6 hours	
Defect, fault or disrepair in respect of a Monitoring Point or any other	24 hours	24 hours	

Fault category	Correction Time Limit Between 06:01-22:00	Correction Time Limit Between 22:01-06:00	Description
electronic monitoring equipment			
Structural defect, fault or disrepair other than at a Tramstop or the depot	28 days	28 days	
Any other defect, fault or disrepair other than at a Tramstop or the depot	2 days	2 days	

Note:

The foregoing table concentrates on elements not covered by the punctuality and qualitative criteria of the Performance Monitoring Regime set out in Schedule 6 to the Agreement.

The Infraco shall develop an electronic system for the management of reactive and faulting maintenance. The system shall be based upon the electronic Event Logger which will be situated in the Control Centre and shall enable the accurate analysis, reporting and logging of faults and other reactive maintenance requirements (including cleaning) including the time and date when they were reported and the time and date when they were cleared. Infraco shall manage all faults through to a satisfactory resolution and will provide a full record and audit trail including details of how the resolution was achieved and the time taken to achieve it. The full details of the system to be agreed with **tie** and shall form part of the asset management system as referred to in these Employer's Requirements.

Life Cycle Maintenance

The Infraco shall refurbish and replace elements of infrastructure before its performance deteriorates below the design, stated tolerances or equipment has become obsolete and/or is incurring disproportionately high maintenance costs as assessed by the Infraco and proposed to **tie**.

The initial lifecycle replacement plan will be based upon the manufacturer's stated design life, Infraco's previous experience, and assumptions on the impact of designed use.

Subsequent annual updates will take into account condition and reliability data gathered during the inspection, maintenance and operational use.

Further Maintenance Activities

In respect of the ETN, the Infraco shall in addition to preventive, life cycle and reactive maintenance undertake the:

- Removal of graffiti;
- Repair vandalism and accident damage; and
- Cleaning.

Repair of vandalism and accident damage and removal of graffiti will be undertaken by the Infraco and, where this is not caused by the Infraco or any of the Infraco Parties, the Infraco shall be entitled to payment for additional labour and material required in accordance with the Schedule of Agreed Prices.

40.2.5 Organisation, Training and Competency

Staffing Plan, Recruitment and Training Plan

The description of the Infraco organisation for all aspects of maintenance and all management and administrative support shall be set out in Infraco human resources plans (staffing plan and recruitment and training plan). These documents shall contain all details of:

- Organisational structure;
- Job descriptions and required competencies;
- Standard training courses;
- Compliance with all appropriate Law and regulations;
- and the procedures required to:
  - Recruit staff to fulfil the various employee roles and maintain the required establishment;
  - List the scope of items to be sub-contracted by the Infraco;
  - Monitor the performance and competency of maintenance staff whether direct labour or contractors; and
  - Secure and review the required competencies and associated training courses.

The maintenance documents submitted in draft form with the Infraco Proposals shall subsequently be developed and agreed with **tie** and Operator as part of the Infraco Works. This will include the identification of key staff. These documents shall be reviewed and updated when necessary, and at least annually.

It is to be expected that there will be an element of staff turn-over during the contract period. The Infraco shall include in the plan their process of ensuring quality is maintained and knowledge is managed and maintained. The proposed replacement of any key staff member of Infraco shall be notified to **tie** and to the Operator.

40.2.6 Quality, Health, Safety and Environmental

Health and Safety

For all matters relating to Health and Safety, Infraco shall produce and maintain a Safety Management Plan, which shall comply with the requirements of ISO18001 and be certified by an ISO approved body. The Safety Management Plan shall be reviewed and updated when necessary, and at least annually.

Environmental and Sustainability Management

For all matters relating to environmental and sustainability management Infraco shall produce an Environmental Management Plan. This shall set out the various environmental legal and regulatory requirements that Infraco shall comply with and the Infraco standards, processes and procedures that will enable compliance with such environmental, legal and regulatory requirements, to also meet its obligations under the various agreements to which it is a party, the **tie** Environmental and Sustainability policy and shall in all respects comply to the requirements of ISO 14001 and be certified by an ISO approved body.

The Environmental Management Plan shall be submitted to **tie** prior to completion of Section A on Site, and shall be reviewed and updated when necessary, and at least annually.

Quality

The Infraco HSQE Manager shall be responsible for providing a Quality Management Plan within the Quality Management System which shall comply with the requirements of ISO 9001 and be certified by an ISO approved body. The Quality Management Plan shall be available at least three months in advance of any maintenance activities commencing. The Infraco HSQE Manager shall be responsible for auditing and inspecting the requirements of all Infraco plans, processes and procedures.

The Quality Management Plan shall be submitted to **tie**, and shall be reviewed and updated when necessary, and at least annually.

Safety

The Infraco shall develop, to the satisfaction of **tie**, the Independent Competent Person as defined under the ROGs regulations, HMRI and other Approval Bodies, a generic safety management system for the commissioning and operation of the ETN that complies with the ROGs regulations.

The generic safety management system shall be capable of development to a full and final version prior to commencement of commissioning of the ETN.

The preliminary work on the safety management system will include the production of a safety justification framework document that will indicate the likely format and some of the detail of the eventual Case for Safety that the Operator, Infraco and Tram Maintainer will be required to present to, and gain approval from, the Competent Person as defined under the ROGs Regulations.

The framework document will be drafted in conjunction with the Operator and **tie** and in consultation with the Competent Person, as defined under the ROGs Regulations and other relevant Approval Bodies describing how system safety is achieved through system design supported by system maintenance and system operation. It shall embrace the following subject areas:

- Description of system design, maintenance and operation: Introductory section giving general description of the ETN, identification of safety responsibilities and reporting mechanisms;
- Arrangements during construction and initial access to the lines: organisation and management of working staff, safety, emergency arrangements, identification of staff, insurance, safety audit, arrangements for keeping and distributing records;
- Arrangements for testing and staff training: organisation and management of staff, safety arrangements including staff working on the tramway, emergency arrangements, identification of staff, insurance, fault analysis, safety audit, arrangements for keeping and distributing records;
- Infrastructure management: track, speed limits, public crossings (surface and bridges), fencing, Tramstop infrastructure, monitoring and reporting systems;
- Tram operation arrangements: operating arrangements including fitness and training of staff, certification of staff, tram preparation, defect repair and breakdown procedures and communications;
- Tramstop arrangements: access for contractors, control of access and vandalism and security;
- Tram maintenance arrangements: engineering and operational acceptance of tram vehicles, competence of staff engaged on maintenance, quality assurance, technical audit, monitoring, reporting of defects, procedure for imposing operating restrictions, acceptance of trams for the transport services;
- Infrastructure maintenance: inspection procedures, accreditation, control and monitoring, reporting procedures, emergency arrangements, communications, signage and warnings in the operating environment;
- Interfaces with other organisations: liaison with emergency services, HMRI and Roads authorities;

- Risk assessment: assessment of the risks associated with all aspects of the project operations including groups of people most at risk, severity of failure event and likelihood of event occurring;

- Health and safety policy: policy statement, monitoring arrangements, alcohol and drug policy including testing and disciplinary action; and

- Code of practice for working on or near the line;

- Control of safety critical work.

40.2.7 Liaison with tie and Other Parties on Maintenance Related Issues

Infraco Communications Plan

The Infraco shall create a Communications Plan (which shall be agreed with **tie** as part of the finalisation of the Infrastructure Maintenance Agreement) for all matters related to communications between the Infraco, the Operator, Tram Maintainer, **tie**, TEL, CEC and if required by **tie** other third parties.

A Communications Plan shall be submitted to **tie** prior to commencement on Site, and shall be reviewed and updated when necessary and at least annually.

The Infraco shall establish effective lines of communication with the Operator and **tie**, through the control centre and planning staff in order to plan maintenance activities around tram service requirements. The Infraco shall pay particular attention to communication in respect of the planning and undertaking of works having a direct impact on the operation of the ETN, the return to full service following completion of the maintenance and unplanned maintenance activities or repairs covering day to day operations and tie/third party long-term contractual matters.

The Infraco shall provide details of how effective lines of communication with the Operator and **tie** will be set up and maintained throughout the Term. This will include details of how key staff and expertise will be provided "on call" at all times to the Operator in the event of unforeseen breakdowns etc. Infraco shall after liasing with the Operator propose a process for system / equipment handover after the completion of maintenance activity to be agreed with **tie** and a programme of daily meetings to discuss punctuality performance (and associated deductions) and infrastructure availability.

The Communications Plan shall be aligned with that of the Operator and Tram Maintainer to ensure communication in critical areas, such as health and safety management, access arrangements for maintenance and response, and permits to work, are coordinated.

40.2.8 Reporting

Annual Review

Infraco shall prepare an annual review report, "The Annual Review Report". The content of the Annual Review Report shall be agreed with **tie** and address the following, as a minimum:

- Health and safety, environmental and quality annual performance reports and proposals for improvement;
- Annual report on planned, reactive and lifecycle maintenance activities carried out against programme, together with impact of shortfalls and proposals for recovery;
- Overall system performance, trends in condition or failures and recommendations based on learning though the process of delivering maintenance; and
- Summary and classification of complaints and significant events, together with actions taken / recommended.
- Recommendations based on learning though the process of delivering maintenance.

Infraco shall be responsible for arranging each year's Annual Review Meeting, to take place, as nearly as possible, twelve months after the previous year's Annual Review Meeting.

Infraco shall issue the meeting agenda and all required management reports and papers, as agreed with **tie**, no later than five working days in advance of each meeting.

Reporting period review

The reporting period review report shall include comprehensive details to cover as a minimum the following information for the relevant Reporting Period:

- Output from performance measurement system with associated performance deduction calculations as Schedule 7;
- Details of all events after associated with failures to provide Available Infrastructure and Available Trams;
- Health and safety, environmental and quality reports;

- Maintenance report showing progress against Annual Maintenance Plan and detailing the programme for the upcoming eight weeks, including;
    - A statement on planned maintenance, including cleaning, performance during the Reporting Period and any backlog;
    - Report on reactive and fault correcting maintenance, including cleaning, required during the Reporting Period, impact on Tram service, and any wider implications to the service and the Maintenance;
    - Any planned future works to be carried out within the eight week period, howsoever arising, which have the potential to disrupt the operation of the Edinburgh Tram Network service; and
    - Infrastructure condition, failures in the Period and mitigation undertaken in Period and with recommendations and actions to be taken, complaints and any significant events.

Infraco shall schedule the Four weekly Review Meetings no less than one month in advance of each meeting.

Infraco shall issue the meeting agenda and all required management reports and papers, as agreed with **tie**, later than five working days in advance of each meeting.

Records

Infraco shall maintain all records necessary for the effective delivery of the maintenance services. All records shall to be up to date within ten Business Days of the end of the relevant Reporting Period relating to the specific record. Records are to be the property of **tie**, access to the records will be afforded to **tie** within five days of a request being made. Records will be kept for the longer of the Term or 6 years from the day the maintenance service was performed.

The record details, including format, storage medium, recovery procedure, administration and access, are to be proposed within the draft Communication Plan, and discussed and agreed with **tie** in conjunction with the final Communications Plan.

The agreed method of communicating a request will be included within the Communications Plan.

40.2.9 Infrastructure Maintenance Plan - Overview

Infraco shall develop and deliver a Maintenance Plan that ensures that all the Infrastructure assets and equipment safely continue to meet their designed operational performance or specification, meet the availability targets identified within the Contract, and support the achievement of the performance regime.

40.2.10 Development of the Plan

An Infrastructure Maintenance Plan shall be developed by Infraco and submitted to **tie** prior to commencement of maintenance activities. This shall detail how maintenance will be delivered in response to the infrastructure maintenance requirements; where it is not possible to include elements of detail at the time, a development plan will be included, identifying exactly what information is outstanding, and when it will be provided.

The completed Infrastructure Maintenance Plan will be submitted by the date identified in the development plan and agreed with **tie**.

During the operational phase Infraco shall submit to **tie** an annual infrastructure maintenance plan for review and approval three months before the anniversary of the Service Commencement Date of the Edinburgh Tram Network or part thereof. The new plan will detail the planned and life cycle maintenance for the following year in order to provisionally approve planned works. The process of approval is to be agreed with **tie** during the tender stage.

Life Cycle Requirements

A Lifecycle Replacement Plan shall be included within the Infrastructure Maintenance Plan. This will detail all planned lifecycle replacement works over the Term.

The annual updates to the Infrastructure Maintenance Plan will include an updated Lifecycle Maintenance Plan detailing life cycle replacement works until the end of the maintenance period.

The planned maintenance strategy (including cyclical and life-cycle maintenance) should be such that the performance of the Edinburgh Tram Network should never fall below that of the designed operational performance or specification, within the Term.

Reactive Maintenance Requirements

The Infraco Maintenance Plan shall detail Infraco's assumptions on the volume and type of reactive maintenance likely to be experienced in the relevant period, and should detail how their resource planning has been prepared to respond to it.

Frequencies

The Infraco Maintenance Plan shall indicate the frequency and sequence to which maintenance will be undertaken; based upon statutory obligations, manufacturer's and best practice recommendations, Contractor's experience and operational performance and availability requirements.

Maintenance Codes

A standard Work Breakdown Structure, consistent with that defined for the construction phase, shall be established to identify maintenance tasks to various infrastructure sub-systems.

40.2.11 Tools

The Infraco shall maintain and replace as appropriate, a full set of tools sufficient for the maintenance of the ETN in good condition and calibrated where necessary.

40.2.12 Availability and Warranty

The availability requirement for the Edinburgh Tram Network is contained within the performance regime.

Lack of availability of key systems or the late running of trams due to failures which are the Infraco responsibility will give rise to the imposition of performance deductions from the fee payable under Schedule 6. Details of the performance regime are set out in the Schedule 6.

During any warranty period or extended warranty period associated with any part and during the Term (as set out in the Agreement), a robust process shall be in place to manage the return and replacement of parts thus contributing to optimal operational service, whilst optimising the management of warranty claims under the Agreement.

40.2.13 Asset Management System

An integrated asset maintenance management and recording system shall be provided and utilised by Infraco in order for data obtained from the tram and infrastructure sub-systems or other sources to be collated and analysed. This will enable the Infraco to assess safety and performance issues and to facilitate modifications and changes, where necessary, to the maintenance plan and working practices including the asset management system itself.

A computerised asset management system shall be established, in a form to be agreed with **tie**, to facilitate maintenance of the assets and allow data obtained from the infrastructure sub-systems, trams or other sources to be collated and analysed. This will include development of an asset register.. This will enable technical staff to assess safety and performance issues and to facilitate modifications and changes, where necessary, to the maintenance plan and working practices.

In addition to recording all the assets as they arrive on site, the asset management system shall record against each discrete item provided with a serial number:

- Its date of registration;
- Its location(s), including transfers from one site or equipment to another;
- Its maintenance history, with references etc.;
- Its fault history;
- Its maintenance prognosis (when maintenance is next due etc.); and
- Overdue inspection / maintenance.

The functional details of the asset management system will be integrated with the hard copies of the suite of operation and maintenance manuals and comply with the requirements specification for an asset management system.

40.2.14 Work Instructions

Infraco shall verify that they and all sub-contractors have carried out the necessary planning to undertake all proposed maintenance activities in accordance with the Infrastructure Maintenance Plan and all necessary risk assessments, method statements and work instructions.

For each maintenance activity type, detailed work instructions will be broken down against equipment type and artisan skill set to facilitate planning of the work. Each work instruction will provide a step by step breakdown of the work involved including information about how any equipment to be worked on should be accessed and / or made safe.

40.2.15 Minimum Spare Parts Holdings

In order to cover all planned infrastructure maintenance and arising corrective maintenance, sufficient spares shall be held by the Infrastructure Maintainer throughout the duration of the Infrastructure Maintenance Agreement to ensure that delays in completing planned or corrective maintenance are not experienced due to parts unavailability.

Infraco will provide details of its planned spares holding within the Infrastructure Maintenance Plan.

The Infrastructure Maintainer shall be required to maintain, at all times, a minimum holding of certain spare parts. The schedule of minimum spare parts holding will be developed by **tie** and Infraco as part of the finalisation of the Infrastructure Maintenance Agreement. The level of minimum spare parts holding will also be reviewed every year to ensure that it is appropriate on the basis of operational experience and Infraco's ongoing requirements.

For the avoidance of doubt, the initial stock / holding of spares shall be provided as part of the initial capital expenditure by Infraco. The Infraco maintainer shall be responsible for the replacement of any spare part used and the stock / holding shall be maintained at the same level, subject to adjustments approved by **tie**, based upon experience, once the ETN is operational. Where repair is to be undertaken in-situ, information shall be provided of any special facilities or equipment required. Where equipment is to be returned to the original equipment manufacturer (or any other organisation) for repair, it shall be demonstrated that the holding is sufficient to allow for predicted turnaround times.

Wherever reasonably practicable and where cost efficient the Infrastructure Maintainer shall source as many consumable spare parts and as much repair work from approved local suppliers in the interests of cost efficiency and minimisation of lead times.

40.2.16 Maintenance Records

All maintenance work performed shall be logged for record, monitoring and audit purposes. This shall be recorded in a log book and in the asset management system.

40.2.17 Indicative Scope

Infraco shall develop their Infrastructure Maintenance Plan to include all fixed Infrastructure and mobile equipment under their responsibility; this includes, but is not limited to those identified in table below.

The maintenance of Infrastructure shall generally be based on the recommendations of the manufacturer or designer, and as set out in the operating and maintenance manual. Specific additional requirements are listed in the second column.

Table 94 - Infrastructure Maintenance Plan Scope

System, Element or Service	tie Specific Requirements
Overhead Line Electrification	
Control and Communications Systems	The common failure reporting of the SCADA system, the log files of computers and the recording devices shall be used for the detection of failures in addition to fault reports provided by the Operator. As the Closed Circuit Television (CCTV) and the Public Address System (PA) at the Tramstops and in the depot area are crucial for the security of the site, their proper functioning shall be monitored. CCTV cameras need to be cleaned regularly and recording media made available. Quick repair of any faulty or damaged CCTV equipment shall be conducted to maintain Tramstop security. It is equally essential that the information given over the PA system be clear and audible, taking into account ambient noise level at Tramstops.
Power Supplies and Sub-Stations	
Tramstops	Regular maintenance is essential to ensure that features, which were designed to prevent crime and improve the environment, do not deteriorate and present opportunities for crime and raise fears for personal security. It is also crucial to ensure that Help Points are clearly signed and well lit so that their location is clear to passengers on the Tramstop. Therefore, the quick repair of faulty or damaged equipment is essential.
Pest Control	Special planned maintenance shall be considered for vermin

System, Element or Service	tie Specific Requirements
	control, pigeon shoots and the removal/ cleaning of birds' droppings and nests. These activities shall be scheduled as required and every six months intervals maximum throughout the ETN.
Depot Building and Yard	Special planned maintenance shall be considered for vermin control, Pigeon shoots and the removal/cleaning of birds' droppings and nests. These activities shall be scheduled as necessary and every six months intervals maximum. Infraco will ensure that safe, secure, access and use of the facilities is not impeded by adverse weather conditions such as snow and ice.
Lighting for Depot Building, Depot Yard, Tramstops, P&R Site, Control Centre and Offices	
Track Work and Roads	
Landscaping	A landscape and vegetation plan shall be developed and adhered to by Infraco to summarise the responsibilities and frequency and scope of the management of trees on, or closely adjacent to, the System (see Third Party Agreements (Schedule 13) and the Code of Maintenance Practice).
Structures	Regular drain clearing
Internal Workshop Equipment	This equipment should be supplied to Infraco with the corresponding operating instructions, which also contain instructions for proper maintenance.
External Workshop Equipment	
Infraco Road Vehicles	Maintenance of vehicles shall be in line with best practice and legislative requirements

40.2.18 Cleaning Maintenance Plan

Within the Infrastructure Maintenance Plan Infraco shall include a cleaning plan which shall detail the cleaning schedule for all infrastructures and equipment for which Infraco have responsibility. In addition to scheduled cleaning, if required by **tie,** Infraco shall provide a reactive cleaning service to respond to specific incidents causing litter or hazards. Where this requires additional material or labour, the scope and costs shall be agreed in advance in writing in accordance with the Agreement.

40.2.19 Track and Infrastructure Cleaning

The Infraco shall ensure that all locations for which Infraco has responsibility are kept free of rubbish and litter. The locations shall be cleaned in accordance with the location categories defined in any Regulations made under the Environmental Protection Act 1990. These categories are:

- Category 1 Walkways linking to public rights of way or road;
- Category 9 Railway embankments in urban areas.

The complete ETN shall be litter picked once every six months on average with the area within the Tramstop being litter picked every month.

Infraco cleaning of Tramstops shall be limited to the following:

- CCTV cameras;
- Passenger Information Displays; and
- Public Address speakers.

40.2.20 Depot Building and Yard, Offices and Car Park

Infraco shall ensure that all locations for which Infraco has responsibility are kept free of rubbish and litter. The areas within the Depot shall be cleaned in accordance with the frequencies stipulated in the Infrastructure Maintenance Plan, but no less than the following:

- Toilets – once a day;
- Canteen areas – once a day;
- Offices – once a day;
- Corridors and communal areas – once a day;
- Workshop area – once a day; and
- Car Park and Depot Yard – once a week.

40.2.21 Cleaning Records

All cleaning work performed shall be logged for record, monitoring and audit purposes. This shall be recorded in a log book and in the CMS.

40.3 Tram Maintenance Strategy

40.3.1 Purpose

The purpose of this tram maintenance section is to describe how Infraco shall procure that Tram Maintainer shall meet its obligations under the Tram Maintenance Agreement and its obligations under the Operators safety justification document in respect of maintenance and all references to Tram Maintainer responsibilities in this section shall be read as Infraco responsibilities and the Infraco shall have overall responsibility for the compliance. This includes the fleet of trams supplied under the Tram Supply Agreement and any relevant plant and equipment for which the Tram Maintainer is responsible. The final version of the Tram Maintenance Plan, to be developed by Tram Maintainer in response to these Employer's Requirements, will set out the specific objectives for the pre-operational period and the first twelve years of operation, following which this document may be reviewed. This Tram Maintenance section should be read in conjunction with the Tram Maintenance Agreement, and with such 'as-built' technical documentation and operation and maintenance manuals as shall be provided by the Tram Supplier.

The Tram Maintenance Plan shall be a fully controlled document. The Infraco shall procure that Tram Maintainer will take into account all mandatory requirements in force at the time of issue. It shall be updated annually allowing a three month review period to take cognisance of operational experience.

40.3.2 Scope

This Tram Maintenance section covers the maintenance activities for the following:

- Tram servicing & maintenance (planned activities);
- Tram repairs (unplanned activities); and
- Cleaning of the trams (primarily the responsibility of the Operator).

Where certain activities are the obligation of parties other than Tram Maintainer, the Tram Maintenance section will describe how the Tram Maintainer shall ensure that such maintenance obligations are fulfilled, so as to ensure the safety of the ETN, is not degraded and that the ability of the Operator to achieve its objectives is not frustrated.

Table 89 – Infrastructure and Equipment Responsibilities Allocation Matrix and Table 83 - Depot Plant and Equipment to be Provided identifies the scope for which the Tram Maintainer is responsible.

Overall Objectives

The overriding objective is to operate a safe, reliable, punctual, clean, easily accessible, comfortable, and environmentally friendly transport service which meets **tie**'s expectations.

The Tram Maintenance Plan will be developed to deliver this objective by:

- Co-operation with Infraco to achieve the aims of the Tram Maintenance Agreement;
- Meeting the specific requirements under the Tram Maintenance Agreement, particularly the defined performance standards in respect of tram availability and reliability;
- Diligent management of subcontractors to ensure they fulfil the requirements of their subcontracts;
- Adherence to the relevant Operations and Maintenance Manuals;
- Setting up and adherence to schedules and programmes for all planned work;
- Co-operation with interfacing parties and in particular the support of any obligations they have under a 'Safety Case', 'Safety Management System' or Legislation;
- Awareness of, and compliance with, legislation, statutes, regulations, and standards governing the operation of the Tramway and any changes thereto. (This will include reviews to identify any necessary changes to any established operating procedures for Phases 1a and 1b); and
- Establishing and maintaining lines of communication with all interfacing and affected parties by means of scheduled meetings, public meetings and consultation. Each year the Tram Maintainer shall undertake programmes to improve the safety, performance, and delivery of the Tram service. These programmes shall be developed in the form of a performance improvement plan which shall be included in future issues of the Operations and/or Tram Maintenance Plan.

Maintenance Approach

The approach to maintenance of the Trams shall be as follows:

- All day to day maintenance and inspection activities and any "special works" are to be planned, organised, carried out and safely handed back to an operational status under the requirements of this Tram Maintenance section and Infraco and/or Operator procedures and regulations;

- All activities carried out under the control of the Tram maintenance plan are the responsibility of a named Tram Maintainer manager (or his named deputy) responsible for the maintenance obligation;

- Maintenance activities are classified as planned, or unplanned arising from condition determined from planned inspection and testing;

- The approach to each of these classifications will be different but essentially there will be two managers (Tram Maintainer and Infraco) liaising with the Operator's Engineering Manager, for carrying out the works in their area of responsibility with Infraco having overall responsibility. Subject to prior approval, these managers may call upon the services of approved sub-contractors to carry out some of these works; and

- Tram maintenance staff will have been trained to drive the Trams within the Depot and will do so when Operator drivers are unavailable to do so.

- The Tram Maintainer shall minimise the operational downtime of the tram vehicles or any other equipment under its control for maintenance.

Table 95 - Maintenance Plan

Maintenance Activity	Planned Frequency	Responsible Manager	Contracted out to External Supplier – Tenderer to complete
Inspection of Trams	Yes See Appendix 1	Tram Maintainer Manager	
Servicing of Trams	Yes See Appendix 1	Tram Maintainer Manager	
Maintenance & overhaul of Trams	Yes See Appendix 1	Tram Maintainer Manager	
Cleaning of trams Sanding, consumable replenishment	Yes See Appendix 1	Operator	N/A
Repairs as required to trams to deliver the timetable (including	Unplanned	Tram Maintainer Manager	

accident damage and vandalism repairs)			

40.3.3 Organisation, Training, and Competency

Staffing Plan, Recruitment & Training Plan

The description of the Tram Maintainer organisation for all aspects of the operation, maintenance, and all management and administrative support of Phases 1a and 1b shall be set out in the Tram Maintainer human resources plans, staffing plan and recruitment and training plan. These documents will contain details of:

- Job descriptions and required competencies; and
- Standard training courses;
- and the procedures required to:
  - effectively recruit staff to fulfil the various employee roles;
  - monitor their performance; and
  - secure and review the required competencies and associated training courses.

These documents shall be agreed with **tie** as part of the finalisation of the Tram Maintenance Agreement.

40.3.4 Quality, Health, Safety, & Environment

Health and Safety

For all matters relating to health and safety the Tram Maintainer shall produce a Safety Management Plan which shall be agreed with **tie** as part of the finalisation of the Tram Maintenance Agreement. This Plan shall set out all relevant or appropriate regulatory requirements that the Tram Maintainer has to comply with, and the Tram Maintainer standards and procedures that it will have to develop to comply with legislation. The Plan will also meet the obligations under the Tram Maintenance Agreement. The Safety Management Plan must not prejudice the Operator safety case. The Tram Maintainer shall operate complaint to ISO 18001.

Environment

For all matters relating to environmental management, the Tram Maintainer shall produce an Environmental Management Plan which shall be agreed with **tie** as part of the finalisation of the Tram Maintenance Agreement. This Plan shall set out all relevant and appropriate regulatory requirements that the Tram Maintainer shall comply with, and the Tram Maintainer Standards and Procedures that it will have to develop to comply with legislation. The Plan will also meet the obligations under the various Agreements. The Tram Maintainer shall operate in compliance within EN14001.

Quality

The Tram Maintainer shall be responsible for quality in so far as implementing the requirements of the above two plans in respect of auditing and inspecting the requirement of all Tram Maintainer plans and procedures. The Tram Maintainer shall operate to and achieve accreditation to ISO 9002.

40.3.5 Liaison with Promoter & Other Parties on Maintenance Related Issues

Communications Plan

The Tram Maintainer shall create a Communications Plan (which shall be agreed with **tie** as part of the finalisation of the Tram Maintenance Agreement) for all matters related to communications within Infraco, the Operator, and all relevant third parties and stakeholders.

It is critical that the Tram Maintainer establishes effective lines of communication with the Operator, through their Control Centre, in order to plan the maintenance activities around service requirements. This specifically relates to the withdrawal of Trams for planned preventative maintenance and returning of Trams for service following completion of these activities and unplanned maintenance activities or repairs.

The Tram maintainer will provide details of how effective lines of communication with the Tram Operator will be set up and maintained throughout the period of the Tram Maintenance Agreement. This will include details of how key staff and expertise will be provided 'on-call' at all times to the Operator in the event of unforeseen tram breakdowns etc. It will also include a system for Tram handover after the completion of Tram Maintenance activity and a programme of daily meetings to discuss punctuality performance (and associated deductions), tram defect status and future Tram utilisation.

40.3.6 Tram Servicing and Maintenance Plan

Fleet Overview

The Tram fleet for Phases 1a and 1b will consist initially of 27 Trams, each capable of carrying about 250 passengers.

The Trams will be maintained at a new purpose-built depot.

40.3.7 Maintenance Plan Overview

All planned and preventative inspection and maintenance shall be carried out using a programme that shall be agreed annually between **tie** and Infraco. A balanced programme is required for this type of rolling stock, enabling the most efficient use of Tram downtime.

Maintenance schedules and examination job titles in this document have been drawn from general experience of similar vehicle types, and do not relate to any particular vehicle. It should be noted that all exams, sequences and frequencies mentioned are indicative at this stage, and will be reviewed once further fleet and maintenance contractor details are known.

Unplanned repair activities are not included in this Tram Maintenance section but shall be provided by the Tram Maintainer in terms specified in the Tram Maintenance Agreement.

40.3.8 Maintenance Strategy

Tram Planned Preventative Maintenance

There are two types of preventative maintenance which are to be carried out:

- Systematic preventative maintenance which follows a predetermined schedule such as:
  - Condition inspection and safety checks;
  - Cleaning of equipment;
  - Functional tests to reveal faults; and
  - Adjustments to enable optimum operation.

- Conditional preventative maintenance consists of carrying out regular inspections to determine that the performance, or operation of, Tram sub-systems remain within pre-determined measurable parameters, such as:

  - Vibration and noise levels;

  - Temperature threshold; motors and cooling circuits, etc.;

  - Wear threshold; wheel diameter, suspension heights/clearances, and pantograph height, etc.; and

  - Door operation times.

Tram Corrective Maintenance

This type of maintenance entails repairing or changing faulty equipment, through observation of failures. It involves three kinds of intervention:

- Breakdown in service requiring specific intervention. Immediate repairs are to be carried out rapidly to clear the line as quickly as possible. This activity is limited to re-establishing sound operating conditions and assisting the Operator to re-establish operational headways. Unless a repair can be rapidly undertaken to ensure safe, normal operation of the affected Tram for the remainder of the day, the affected Tram should be withdrawn from service and returned to the Depot where a more permanent repair, under controlled conditions, may be carried out.

- Repairs. This covers interventions carried out following incidents or failures that occur in operation, or identified from routine maintenance activity, generally involving a longer stoppage of equipment including overhauls of an entire Tram or major Tram component or operating system. This is an intervention of lasting character, carried out by maintenance staff (or approved sub-contractors). After repair, the Tram must conform to its original specifications.

- Whilst not strictly a breakdown, the Tram Maintainer shall also be required to assist with the recovery of any Tram derailment occurring on the line and carry out the appropriate re-railing technique, irrespective of the cause of the derailment. The Tram Maintainer will advise the Operator of the safe condition, or otherwise, when re-railing of the Tram has been completed.

Further Maintenance Operations

Preventive maintenance and corrective maintenance must be complemented by:

- Operations that contribute to the good image of public transport (appearance and comfort) such as removal of graffiti and re-applying freshening up paintwork, that cannot be achieved by the Operator through routine cleaning methods; and

- Checks on wheel condition (profile and flats).

The final version of the Tram Maintenance Plan shall include the proposed programme for all Tram preventative maintenance and further maintenance operations.

The periodicity/interval and duration or all planned preventative maintenance activities shall be specified in the final version of the Tram maintenance plan. It is anticipated that most intervals will be fixed-time intervals based upon calculated scheduled service distances, to be specified by the Tram Supplier. If any activities are specifically based upon a kilometreage based interval, which cannot readily be related to elapsed time, this should be made clear in the proposal.

The various examination types, based on their interval shall be categorised by code letter and the activities to be undertaken shall be fully detailed. The information should be summarised in the form of a matrix or star/dot chart where the breakdown of exam type is shown labelled on one axis and equipment or sub-system to be worked on is labelled on the other axis.

The Tram Maintainer will also create a list of standard repair times for items that are susceptible to damage or failure in service, such as replacement of glazing, lower front skirts, pantograph etc. Where possible, standard durations for repair and fixed prices for these repairs shall be established.

Maintenance Codes

A standard set of maintenance codes should be established to identify maintenance tasks to various Tram sub-systems:

The following standard set of codes is proposed (and are used in the Star Charts) and should be developed further as the details of the Tram design and recommended maintenance approach are understood:

Table 96 - Star Charts

Code	Area
A	Sanding System
B	Brakes
C	Bodywork
E	Battery and Control Systems
F	Radio and communications systems
G	Pantograph
H	Heating and Ventilation
I	Interior Trim and Fittings
M	Electrical Machines
O	Doors
P	Electrical Traction Power Equipment
T	Mechanical Transmission
U	Underframe and Bogies
Z	Emergency Equipment

Maintenance star charts setting out the indicative periodicities for maintenance activities shall be developed as part of the Maintenance Plan.

These star charts are to be developed in line with the finalisation of the Tram Maintenance Agreement and Tram Supplier's recommendations.

40.3.9 Availability and Warranty

The availability requirement for phases 1a and 1b of the ETN will be established in detail during the tendering process. Where possible, at peak periods and for special events, all trams should be made available.

Any lack of availability will give rise to the imposition of availability deductions from the fee payable under the Tram Maintenance Agreement. Details of the availability performance regime are set out in the Tram Maintenance Agreement. This also sets out the requirement for a 'hot spare' Tram and for Trams to be available for training purposes outside of peak hours.

During the Warranty and Extended Warranty period (as set out in the Tram Supply Agreement) a robust process must be in place to manage the return and replacement of parts thus ensuring optimal operational service, whilst optimising the management of warranty claims under the Tram Supply Agreement.

40.3.10 Technical Management

An integrated, computer-based maintenance management and recording system (CMS) should be utilised in order for data obtained from the maintenance of the Trams or other sources to be collated and analysed. This will enable the technical team to assess safety and performance issues and to facilitate modifications and changes, where necessary, to the Tram Maintenance Plan and working practices.

The CMS shall also provide a real-time configuration management control system of the Trams by recording serial numbers of all components on the Trams. This record shall also be updated whenever components are exchanged or replaced during maintenance or repair of the Trams.

The CMS will need to be capable of interfacing with Infraco and/or **tie**'s systems to facilitate remote access to maintenance management data.

40.3.11 Work Instructions

In order for Infraco to be able to verify that the Tram Maintainer has carried out the necessary planning to undertake all proposed preventative maintenance activities in accordance with the Tram Maintenance Plan, details of the work activities shall be submitted for information only.

For each exam type detailed work instructions will be broken down against equipment type and artisan skill-set to facilitate planning of the work. Each work instruction will provide a step-by-step breakdown of the work involved including information about how any equipment to be worked on should be accessed and/or removed from the Tram.

Each work instruction should, as a minimum, include details of:

- Health and safety precautions;
- Key skills and competencies required to undertake the work;
- Consumable components to be replaced;
- Special tooling (if any);

- Particular Depot facilities required; and
- Agreed time to complete the task.

40.3.12 Minimum Spare Parts Holdings

In order to cover all planned Tram Preventative Maintenance and arising Corrective Maintenance, sufficient spares shall be held by the Tram maintainer throughout the duration of the Tram Maintenance Agreement to ensure that a Tram is seldom unavailable for service due to parts unavailability.

Spares fall into the following categories:

- Consumables (brake pads, filters, bulbs etc.);
- Line Replaceable Units (repair on site);
- Line Replaceable Units (return to OEM for repair); and
- All other equipment.

The Tram Maintainer shall provide details of its planned spares holding and into which of each of the above categories each item falls.

In order to facilitate a seamless transition of Tram Maintenance services from one Tram Maintainer to another on the expiry or earlier termination of the Tram Maintenance Agreement, the Tram Maintainer shall be required to maintain, at all times, a minimum holding of certain spare parts. The schedule of minimum spare parts holding will be developed by **tie** and the Tram Maintainer as part of the finalisation of the Tram Maintenance Agreement. The level of minimum spare parts holding will also be reviewed after three years to ensure that it is appropriate on the basis of operational experience and Infraco's ongoing requirements.
Failure to maintain the minimum spare parts holding will give rise to an availability deduction being made in respect of the maintenance fee.

Where repair is to be undertaken on site, information shall be provided of any special facilities or equipment required. Where equipment is to be returned to the original equipment manufacturer (or any other organisation) for repair, it shall be demonstrated that the holding is sufficient to allow for predicted turnaround times. Estimated lead times for all other spares shall also be provided.

Where line replaceable units (LRUs) are exchanged as part of normal Tram preventative maintenance (to be brought up to optimum condition off the vehicle), the appropriate work

instruction should be explicit regarding this fact and should also state the approved time for exchange of such components. The spares holding of LRUs should be sufficient to cater for this method of working.

Wherever possible the Tram maintainer shall source as many consumable spare parts and as much repair work from approved local suppliers in the interests of cost efficiency and minimisation of lead times.

40.3.13 Cleaning Maintenance Plan

Tram Cleaning

Internal and external cleaning of Trams is the responsibility of the Operator. This will also include the removal of graffiti, except where this cannot be removed by normal cleaning methods or requires replacement of the panel(s) concerned. In such cases the panels will be replaced or made good by the Tram Maintainer. This shall also include the replacement of window glazing due to damage by etching.

The Tram Maintainer must ensure that adequate quantities of interior and exterior body panels, glazing and window sealing materials are kept in stock to meet this obligation.

40.4 Maintainability, Maintenance and Spares

40.4.1 General

An asset register shall be produced by the Infraco and the Tram Maintainer and populated by them with equipment data, serial numbers etc. The asset register shall be available prior to the commencement of delivery of equipment and materials. All spares, tools and test equipment which are delivered as part of the Works, shall be entered in the asset register.

Performance, reliability, fault / failure data shall be available that enables analysis of the Edinburgh Tram Network for product improvement.

Data shall be presented to maintenance staff such that potential causes of faults / failures are clearly identified.

Hardware components shall be easily accessible and not require specialist equipment for their removal or replacement.

Connectors shall be used which permit fast and easy disconnection and replacement of faulty / failed components and prevent dirt and moisture ingress and are suitably supported and specified for the operating environment in which they are used.

Maintenance regimes, component replacement programmes and spares holding levels shall be determined through fault tree, cause-consequence and Markov analysis, as appropriate, and ratified through the verification and validation process.

Spares that have potential long lead times, or minimum order quantities, shall be identified and adequate quantities held on site in order to achieve the performance requirements of the system including repair times.

The Edinburgh Tram Network shall be designed to facilitate inspection, repair, maintenance and fault finding without interruption to the ETN operations and performance.

Spares provided shall be sufficient to ensure the continuous operation of the system from the date of the Edinburgh Tram Network handover to **tie**. These spares shall include provision for damage and vandalism. The Edinburgh Tram Network design shall be underwritten such that all equipment / system suppliers shall warrant that all equipment in the design shall be available for the design lives specified and that they shall give **tie** a minimum of twelve months notice where after that period they intend to cease supply of that component.

Equipment housings / enclosures and their contents, e.g. racks etc. shall not exceed 2.0m in height unless specifically agreed by with **tie**.

The lowest mounting point, plug-in group or terminal block shall not be less than 0.4m above floor level unless specifically agreed by with **tie**.

Cables shall be clearly identified at each end of the cable connections by clearly visible and indelible labels. Related drawings shall describe the labelling conventions.

The maximum use shall be made of readily available and fully proven 'industry standard' materials and components. These shall remain readily available for the projected life of the Edinburgh Tram Network and which shall be supported in the market place on an ongoing basis.

Provision for handling the possible obsolescence of any of the components during the projected life of the ETN without degrading the ongoing performance of the Edinburgh Tram Network shall be individually addressed prior to supply/construction.

The detailed arrangements for the delivery, storage, management, and control of spare parts shall be agreed between the Infraco, the Tram Maintainer and the Operator as part of the arrangements for the ongoing operation and maintenance of the ETN.

In addition, Infraco shall procure that an adequate supply of consumables and spares shall be available to support the testing, commissioning and shadow running.

The Infraco / Tram Maintainer shall establish and maintain a log of all such consumables and spares used during this process and an updated copy shall be presented with each monthly progress report.
Where cables are to be provided, they shall contain sufficient slack to permit reasonable disturbance during maintenance.

40.4.2 Structures and Civil Engineering

As the bulk of these features will be static, the quantity of spares shall include those items that may suffer attrition as a result of accidents and vandalism such as signage, bollards, etc., and any special features bespoke to the ETN.

If not readily available, small quantities of special surfaces, e.g. tactile paving, etc., shall be stocked but it is anticipated that common wearing surfaces will be repaired using materials commonly available to the trade.

40.4.3 Track

In respect of track and ancillaries, the levels and numbers of spare holdings of major replacement elements, such as rails, sleepers, switch half-sets and full-sets, and crossings – 'standard' supply and more importantly of bespoke design – are considered to be of critical importance. At least one point machine, point indicator and hand operated mechanism shall be provided. Additionally, quantities of small parts and day-to-day maintenance items, together with special equipment such as buffer stops, are to be provided, based on instructions contained in the maintenance manual and on forecast component lives. In proposing the numbers of all spares holdings, the objective will be to ensure, as far as will be reasonably practicable, uninterrupted operation of the tram services.

40.4.4 Training

An indicative training plan for all parties involved in the maintenance and operation of the Edinburgh Tram Network System shall be produced and submitted to **tie** within six months of the Commencement Date. This shall be updated as required thereafter and as a minimum, be submitted to **tie** every eight months.

40.4.5 Infrastructure and Trams

Training and Competency

Staff training and competency assessments shall be carried out in accordance with best practice. The requirements of the ROGs regulations for safety critical work shall be observed.

Training Plan

An indicative training plan for all staff of the Edinburgh Tram Network System shall be produced within six months of the Commencement Date.

Both operating and maintenance training courses shall be provided for all of the items of supply associated with the Edinburgh Tram Network, including the operation and maintenance of all specialist plant and tools provided or required. All training materials and classes shall be in the English language.

The training may take place either at an individual contractor's premises or, locally on the tramway system or at other facilities to be agreed with the Operator/Maintainer and made available by the training supplier. All these arrangements shall be with the prior agreement of the Operator/Maintainer. "Maintainer" in this Section regarding Training in maintenance and operation means both Infraco and Tram Maintainer.

A training plan shall be provided for each group of trainees (i.e. Operator and Maintainer) covering all the items of supply. The plan will set out in a logical manner the order, duration, location and the content of the training to be given, the type (i.e. classroom, practical hands on) and the scope (i.e. operation, routine maintenance, first line repair, second line repair etc).

The Training Plan shall take due account of the Operator's proposed operational plan and the maintainer's proposed maintenance plan and any manufacturer's or otherwise recommended maintenance intervals for the scope of equipment supplied as well as all manufacturer's maintenance intervals for the equipment provided.

The Training Plans will clearly set out the course objectives. These will ensure that:

- All appropriate grades of operational and maintenance staff are able to perform, in a proper, effective and safe manner all necessary scheduled and reasonably foreseeable unscheduled tasks in order to functionally operate, maintain, fault find and safely restore in the shortest time in the event of any failure, the full functionality of the systems and equipment forming the Edinburgh Tram Network.

- All appropriate operational and maintenance staff are able to comprehend environmental and operational conditions, safety concepts and the health and safety requirements when carrying out their duties.

- All appropriate operational and maintenance staff are able to correctly interpret and make proper correct safe and effective use of all operational electronic data, displays and printed/written documentation presented to them in the course of their duties.

- The competence of all of the trainees shall be certified in a format that is compliant with all of the obligations placed on the employers of the trainees.

- The Training Plans shall clearly set out the level of testing of trainees, and how the certification of trainees will be achieved and documented. It shall also set out the method of participant feedback to be used following the completion of the training. Where appropriate, the testing and certification process will be split where appropriate to ensure competency on particular items of equipment, systems and methods.

- The training plans shall be agreed with **tie** and the operator prior to the commencement of the training.

Training Material

Infraco will provide, inter alia, the following training materials appropriate to the individual training session.

- Twelve sets of all training material and two sets of the Training plans and trainer's course material and notes, together with copy discs, drawings and artwork shall be provided to enable the Operator/ Maintainer to provide future training courses for himself when necessary.

- All training material, including master discs, drawings and artwork, will be updated within four months of the completion of the training on the basis of the formal feedback from attendees and the Operator/ Maintainer of 'lessons learnt' and from its practical application on the tramway on a routine basis and shall reflect all changes made to the system such that the system and training are fully aligned.

- In the event of any of the systems or equipment supplied and installed having to be modified or amended or the maintenance requirements for the same being revised within the Warranty period, the training material shall be revised and updated to reflect the changes to equipment, components or procedures that have become necessary.

Training Costs

All relevant costs, including travel and accommodation, associated with the effective training of the Operator/Maintainer's staff, on site or remote, shall be at the expense of the training provider, including materials, classrooms and instructors, but excluding the time cost for the trainees.

40.4.6 Maintenance Training

All relevant costs associated with the effective training of the Operator/Maintainer's staff, on site or remote, shall be at the expense of the training provider, including materials, classrooms and instructors, but excluding the time cost for the trainees.

Training courses and materials shall be provided in line with the Training Plans. These shall cover all operations necessary for the maintenance, repair and renewal of all the infrastructure and equipment forming the ETN systems throughout its life including items such as fault diagnosis, replacement and repair of equipment, software maintenance, system structure, integration and interfaces and hardware and software set-up.

The training shall include training on all the specialist tools and test equipment and software required to maintain and operate the system.

The training shall be structured as set out in the training plan to cover the basic theory, system operation overview, routine maintenance, first line fault rectification, second line fault rectification, renewals and software maintenance.

The training documentation shall include reference to manufacturer's documentation and also include all documentation, drawings, and technical data required to provide a single reference for the items covered by the training. The documentation will include fault identification and rectification process flow charts to assist maintenance personnel in identifying and rectifying faults. The initially recommended periodicity of inspections, tests and routine maintenance or rectification processes shall include 'pass' or 'fail' criteria. In the case of a 'failed' test, the appropriate course of action, with remedies for such inspections, tests and maintenance shall be detailed. Course documents, course content and notes shall be submitted for approval by **tie**.

Risk assessments shall be carried out on all of the proposed maintenance methods and where found to be appropriate safe systems of work shall be included within the training material and training. COSHH assessments will be carried out on all substances to be used in the training and proposed for the maintenance of the equipments. All such documentation shall be submitted to **tie** for approval.

Personal Protective Equipment for course attendees shall be provided, as appropriate, by Infraco.

Testing and certification of the attendees shall be carried out. Upon completion of the training on each section of the equipments and systems, all attendees shall be required to pass a written and practical test for evaluation and certification purposes by the trainer to confirm that personnel are competent to carry out all necessary tasks. The certification process and documentation shall be submitted to **tie**. The individual results and certification shall be fully documented and presented to **tie** and the Operator / Maintainer for their records.

40.4.7 Operational Training

Sufficient Operational Training Courses shall be provided in line with the Training Plan for all the various grades of the Operator/Maintainer's staff, to ensure that safe and proper operation of the system can be achieved throughout its life, commencing with the formal take-over of the ETN.

The training shall be structured as set out in the training plan to cover the operation of the ETN under all operating conditions, including normal running and working in the many degraded modes, and in the recovery from degraded modes.

The training shall include operator familiarisation and functional training in conjunction with the Factory and Site Acceptance Tests of the integrated system and Control Centre systems.

The training shall provide comprehensive hands-on training on the equipment and systems for all operational equipment including trams.

This shall include the simulation of a service and all associated equipments and failures.

The training shall include full details of the functionality of the tramway and control systems.

The training documentation shall include reference to manufacturers' documentation and also include all documentation, drawings, and technical data required to provide a single reference for the items covered by the training. The documentation shall include fault identification process flow charts to assist the Operator / Maintainer in identifying faults and to assist in the deployment of the correct maintenance personnel.

40.5 Information Procedures, Records and Manuals

40.5.1 General

All designers, suppliers, installers and maintainers of the Edinburgh Tram Network shall provide comprehensive documentation in support of their works. Such documentation shall be prepared in

accordance with the contractual requirements, Employer's Requirements and any other relevant documentation.

This information will be included in the form of the Project Health and Safety File. The file will be divided into Sections and Volumes in a manner to be agreed with **tie**. Each Section will be numbered in sequence and may comprise more than one volume. The volumes shall be identified by an integrated sequential numbering system.

40.5.2 Information

Information to be provided shall include, but shall not necessarily be limited to:

- Product literature;
- Design parameters, specifications, data and drawings;
- Product specifications;
- Illustrated parts lists;
- Product usage and examples of use service;
- Whole life cycle evidence and documentation;
- Maintenance and fault finding;
- Spares management, product storage and handling; and
- Health and Safety considerations and documentation.

40.5.3 Operation and Maintenance Manuals Information

Infraco shall produce for the Edinburgh Tram Network operating instructions for the system as a whole and for all individual sub-systems consolidated into an overall suite of bespoke Operations and Maintenance Manuals. This data shall be produced in hard copy form and shall also be available as an on-line database to operations and maintenance personnel.

The Edinburgh Tram Network shall have maintenance instructions for the system as a whole and for all individual sub-systems consolidated into an overall suite of Operations and Maintenance Manuals.

This data shall be produced in hard copy form and available as an on-line database available to maintenance personnel. The technical documents and manuals shall be compiled electronically in a universal format such as XTML.

Maintenance instructions shall be available in hard copy form and for download to remote/portable diagnostics terminals.

The Operations Manuals and Maintenance Manuals shall be comprehensively indexed and cross-referenced. They shall meet all requirements of an ISO 9000 Quality Plan, ISO 14000 Environmental Plan and ISO 18000 Health and Safety Plan. They shall take into account the relevant legal requirements and customary practices existing in Scotland. They shall be of a quality at least as good as that outlined in the SDS Maintenance Documentation Specification (reference number ULE90130-SW-SPN-00064).

They shall be prepared in accordance with a uniform approach, combining together the contributions from different contributors. They shall be consistent in terms of the page layout, indexing, language, tense, person and methodology of maintenance of each item of equipment on the system in a clear and concise manner.

The Maintenance Manuals shall include initial planned maintenance schedules and all inspection and maintenance frequencies. These frequencies shall include, but not necessarily be limited to, post commissioning, daily, weekly, specific and periodic inspection and procedural activities. All such activities shall be fully co-ordinated and integrated to minimise the frequency of visits and thus the possible disruption of the tram service.

The contributors shall update the manuals' information at periods considered appropriate to their equipment and/or installation supply throughout during the contracted period of maintenance and/or warranty agreement. Notwithstanding such interim updates, a full review and update will be undertaken at the end of such maintenance and/or warranty agreement. Such updating material shall be carried out and provided by the appropriate maintainer.

The master copy of the Manuals shall be held electronically and be accessible via the Internet using an appropriate access permission regime. The access arrangements shall record who accesses individual sections and when.

The information to be included in the manuals from the relevant subcontractors through the Infraco and Tram Maintainer shall include, but not be limited to the following:

- System Overview (including explanation of manuals content)

Landscaping Manuals, comprising:

- Area Descriptions;
- Inspection and Maintenance Manual; and
- Planting Stock Lists.

Structures Manuals, comprising:

- Structures descriptions, etc.;
- Inspection and maintenance manual; and
- Illustrated parts list.

Power supply Mmanuals, comprising:

- Equipment Description and Operation Manual (how the equipment works);
- Maintenance Manual (including inspection and day-to-day maintenance procedures);
- Overhaul Manual; and
- Illustrated Parts List.

Overhead Line, Manuals, comprising:

- Equipment Description and Operation Manual (how the equipment works);
- Inspection and Maintenance Manual (including erection procedures, etc.);
- Overhaul Manual; and
- Illustrated Parts List.

Permanent Way Manuals, comprising:

- Equipment Description and Operation Manual (how the equipment works);

- Inspection and Maintenance Manual;
- Overhaul Manual; and
- Illustrated Parts List.

Tramstops Manuals, comprising:

- Tramstop descriptions, Lighting, Seating, Signs, etc.;
- Inspection and Maintenance Manual; and
- Illustrated Parts List;
- Supervisory Control and Communications Systems Manuals, comprising:
- Equipment Description and Operation Manual;
- Inspection and Maintenance Manual; and
- Illustrated Parts List.

Tram Manuals, comprising:

- Information to be included in a Drivers Handbook;
- Equipment Description and Operation Manual;
- Maintenance Manual (including inspection and day-to-day maintenance procedures);
- Overhaul Manual (larger overhauls are unlikely to be carried out by **tie** and this will be required by their eventual overhaul contractor); and
- Illustrated Parts List.
- A full suite of vehicle design drawings.

Gogar Maintenance Depot Manuals, comprising:

- Description of Depot and its Equipment (including road and on-track maintenance vehicles);
- Maintenance Manual (covering all equipment including integrated equipment maintenance schedule) under the following headings:
  - Fixed equipment;
  - Mobile equipment;
  - Portable equipment; and
  - Hand tools.
- Illustrated Parts Lists for each of the above.

Central Control Centre Manuals, comprising:

- Operational Procedures (these may be included in System Operation manuals);
- Equipment Description and Operation Manual; and
- Illustrated Parts List.

Signalling, including:

- Equipment Description and Operation;
- Inspection and Maintenance Manual; and
- Illustrated Parts List.

40.5.4 Asset Register

The Operations and Maintenance Manual shall be linked to an Asset Register within the computerised Asset Management System that shall be provided by the Infraco . This shall be populated with actual equipment data, serial numbers etc. This asset register shall be capable of being linked to a graphical information system (GIS) and include as-built, maintenance and other drawings and records.

Performance, reliability, fault/failure data shall be included, presented and made available to enable analysis for product improvement.

40.5.5 Provisional List of Operating Procedures and Standards

A – Operating Procedures (To be developed in conjunction with the Operator)

1. Permit to work;
2. Power switching and isolation;
3. Switching and Safety Interlocking with Inspection Platforms in Depot;
4. Track Safety;
5. Issue and use of Personal Protection Equipment;
6. First Aid;
7. Communication with OCC (Trackside);
8. Communication with OCC (Tram);
9. Depot & Yard Tram Movements & Parking;
10. Use of Wheel Lathe;
11. Lifting & Safe Handling;
12. Recording of Maintenance & Repair in Infraco Records System;
13. Risk Assessments (Safety, and Environment);
14. COSHH Risk Assessments;
15. Preparation and Approval of Method statements;
16. Materials Procurement & Control;
17. Waste Disposal;
18. Evacuation of Depot;

19. Detailed maintenance procedures (as supplied by the Tram Maintainer & Infraco);

20. Monitoring the medical condition of employees;

B – Infraco Standards (to be developed by Infraco prior to Section A completion)

1. Tram (pantograph parameters, door parameters, wheel profile, suspension/coupler heights & clearances, brake parameters and wear limits);

2. Tram Driver routine preparation;

3. Tram Cleaning;

4. Tram related Noise and Vibration (To be developed in conjunction with the Tram Maintainer);

5. Tram clearances with Tramstops (To be developed in conjunction with the Tram Maintainer).

Part 2: Tram Documentation

Refer to Tram Manuals set out at clause 40.5.3 of the Employer's Requirements

Part 3: Training Schedule

The Tram Supplier shall provide, at its own cost, training courses suitable to provide ample knowledge to the Operator's driver trainers and managerial staff for them to be able to operate the trams safely and efficiently on the Edinburgh system. The courses shall teach (as a minimum but not be limited to) the following subjects:-

- a detailed explanation of all of the tram systems and how they work with the technical content suitable for a person of Operations Supervisor level
- handling of the tram including preparation, setting off, driving, normal braking, hazard braking, emergency braking and stabling
- setting off on a gradient
- use of all controls normally accessible to the driver and inspector
- explanation of all warnings and alarms on the vehicle including a comprehensive list of the faults to be displayed on the fault annunciator panel
- recovery of a failed tram by another tram
- re-railing techniques (which shall include a real re-railing exercise using a tram)
- basic inspection of the vehicle to assess it's suitability for service
- provision on the courses for a suitable third party to describe the function and use of the freely supplied equipment (e.g. radio; BusTracker; TPDS)

As much as practicable, the course shall take place with full access to a fully functioning tram at the Edinburgh depot.

The Tram Supplier must provide a written assessment of the trainees' understanding of the course at the end of each day and again at the end of the course, providing a detailed and scored record of each person's progress through the course..

Any poor performance from or poor ability amongst the trainees shall be reported at the earliest opportunity to the Operator. If necessary individual coaching shall be given to trainees in order to bring their understanding up to an acceptable level but the costs associated will be borne by the customer, unless there is negligence by the Tram Supplier on the teaching process. To minimise the risk of this happening, the Operator shall agree the course content in advance and the Tram Supplier shall conduct the course using suitably-qualified instructors.

It shall be assumed by the Tram Supplier that a suitable room in a location at the depot or other suitable site shall be provided.

There shall be a maximum of two courses each for up to 10 attendees. The programme for the two courses shall be agreed with **tie** and the Operator.

The Operator Training Plan and Maintenance Training Plan included hereafter are indicative of the activities envisaged.

OPERATOR TRAINING PLAN

INDEX

1. INTRODUCTION 2
2. PURPOSE 2
3. COURSE STRUCTURE 2
4. COURSE DATES 3
5. NUMBER OF ATTENDEES 3
6. CHARACTERISTICS OF THE ATTENDEES 3
7. COURSE FORMS: INSTRUCTORS AND DRIVERS 3
8. RESOURCES REQUIRED TO GIVE THE COURSE 4
9. MATERIAL EXPLICITLY EXCLUDED FROM THE DRIVING COURSE . 4
APPENDIX 1 5

1. INTRODUCTION

This document describes the training course for drivers which CAF intends to run, in collaboration with TIE, to provide courses in the operation/driving of the Edinburgh train units.

2. PURPOSE

To provide the necessary training for the operation of the train unit which allows the instructors and drivers attending the course to gain sufficient knowledge regarding the operation of the vehicle to carry out their work as drivers under normal service conditions and more foreseeable abnormal conditions.

The course shall mainly be aimed at the training of instructors, so that these can later train the various drivers.

This training course is limited to the operation/driving of the trains. The plan and contents of the maintenance courses for the train units shall be detailed in a separate document.

3. COURSE STRUCTURE

The course shall basically consists of two parts: One shall be theoretical-practical and the other essentially practical.

- **Theoretical-Practical Part**

This part of the course shall last for five days, and although it may include general explanations, it shall focus on getting to know the vehicle and its specific equipment.

The planned schematic for the course is as follows:

1. Description of the vehicle and its operation.
2. Operation of the traction and braking equipment.
3. Operation of the auxiliary equipment
4. Analysis of electric and pneumatic schematics.
5. Driving the vehicle.

See Appendix 1 where a preliminary detail list of contents is attached of the material to be studied in the course.

The theoretical explanations shall be studied in the mornings and visits shall be made to the vehicles in the afternoons (vehicles being tested on the track or in the final finish of the production process) to contrast that studied and eventual clarifications.

The staff attending the course shall be provided with the following documentation:

- Descriptive manual (provisional) of the vehicle.
- Vehicle drivers manual (provisional).
- Descriptions of the main equipment of the vehicle.
- Functional schematics.

This course shall be taught by High or Medium level technicians that have taken part in the project, tests and production of the vehicles, with the participation of the companies that supply the various items of equipment.

- **Practical Part:**

This shall take place in line with the customer's design on some of the first supplied vehicles and shall last for four days.

Obviously this course shall be aimed at the staff who have taken part in the first phase.

4. COURSE DATES

The dates for these courses shall be agreed to with the customer taking into account the availability of vehicles and drivers.

5. NUMBER OF ATTENDEES

One course is envisaged, in principle, for a maximum of 8 instructors and/or drivers.

6. CHARACTERISTICS OF THE ATTENDEES

The courses are mainly aimed at the instructors but also at drivers, who must have basic knowledge of passenger transport vehicle driving (preferably rail transport, and under all circumstances a bus driver's license is indispensable) guaranteeing their knowledge of the traffic and road safety laws and regulations currently in effect.

7. COURSE FORMS: INSTRUCTORS AND DRIVERS

The course is planned to be given in two slightly different forms, one for instructors and another for drivers.

The instructor training shall be given in a first cycle where they shall receive a normal driving course, and once this has been studied, a specific presentation (SGMA) shall be given, more focused on how to teach the various parts of the course.

8. RESOURCES REQUIRED TO GIVE THE COURSE

In order to teach the course, the customer must provide the following necessary resources:

- Appropriate classroom for the course capacity.
- Projector.
- Access to train units being tested for the theoretical-practical course.
- Operational train unit for the practical course.

9. MATERIAL EXPLICITLY EXCLUDED FROM THE DRIVING COURSE

The following subjects are explicitly excluded from the scope of this course as the content exceeds the scope of this driver course:

- Track Safety.
- Driving standards and regulations established by the customer.
- Rail traffic regulations (signalling, operation in sheds, etc.)
- Track circulation regulations (on shared track).
- Personal safety and well-being.
- Accident reports.
- Run over accidents.
- Operation of the signalling systems of the fixed parts (not on-board), according to the final contract.
- Use of the safety systems (towing system, rerailing system on public track), except for those relating to resources fitted on the trains (lifting points, coupling points, etc.)
- Operating system: Control post, safety installations, communication installations and power supply installations.
- Vehicle maintenance (see separate document relating to the maintenance courses).

APPENDIX 1

PRELIMINARY LIST OF CONTENTS OF THE DRIVER TRAINING COURSE

INTRODUCTION AND FAMILIARISATION

A. Course introduction

1. Introduction
2. General perspective of the vehicle

B. Vehicle description

3. Exterior arrangement and lighting
4. Distribution of equipment in boxes
5. Arrangement of underfloor equipment
6. Interior arrangement
7. Cab arrangement

C. Discussion

DESCRIPTION OF THE SYSTEMS AND VISIT TO THE VEHICLE

A. Systems

8. Coupler
9. Access doors
10. Electric Systems
11. Dynamic braking and traction
12. Cab air conditioning and fan/heating unit.
13. Communications system

B. Vehicle visit

C. Discussion

CAB EQUIPMENT

D. Identification and location of items:

14. Master Controller
15. Microphone:
16. Central control console:
17. Dead man, emergency brake; gong
18. Electric cabinets
19. Driver seat

E. Discussion

VEHICLE OPERATION

F. Operations prior to the commissioning of the unit

20. Inspections of the exterior of the vehicle
21. Commissioning operations
22. Equipment checks

G. Normal driving mode

23. Traction drive
24. Brake
25. Emergency braking

H. Coupling and uncoupling

26. Safety measures
27. Coupler
28. Coupling
29. Uncoupling

I. Cab change

J. Operations to be performed to put the train to out of service

K. Various operations

30. Windscreen wipers

31. Lighting

32. Gong

33. Air conditioning

L. Door equipment operation

M. Service under abnormal conditions

34. Traction system fault

35. Door lock-off

36. emergency lighting

37. Manual pantograph operation

N. Discussion

COMMUNICATIONS

O. System Operation

38. Radio

39. Passenger information system and intercoms

40. Destination indication panels

41. Automatic station announcer

P. Discussion

FAULT ISOLATION

Q. Vehicle systems fault isolation

42. Doors

43. Lighting

44. Air conditioning

45. Power sources
46. Traction
47. Brake
48. Communications

R. Discussion

S. Conclusions

49. Course revision
50. Assessment

MAINTENANCE TRAINING PLAN

INDEX

1. INTRODUCTION.....2
2. PURPOSE.....2
3. COURSE STRUCTURE.....2
4. COURSE DATES.....3
5. NUMBER OF ATTENDEES.....3
6. CHARACTERISTICS OF THE ATTENDEES.....3
7. RESOURCES REQUIRED TO GIVE THE COURSE.....3
APPENDIX 1.....4

1. INTRODUCTION

This document describes the training course for the maintenance staff that CAF shall run, in collaboration with the customer, to give courses for the maintenance of train units.

2. PURPOSE

To provide the necessary training in maintenance of the train unit supplied by CAF, that permits the maintenance staff who attend the course to have sufficient knowledge to provide service, maintenance and repair the vehicle systems and their related components.

3. COURSE STRUCTURE

Basically the course shall consist of a theoretical part and another which is essentially practical, where the knowledge acquired in the theoretical classes shall be put into practice. The course shall be held at the premises and depot of the customer.

This course shall last 10 days and shall focus on familiarising the maintenance staff with the train units and providing sufficient knowledge to perform inspections, periodic maintenance, isolate operation faults, and perform corrective maintenance.

The planned schematic for the course is as follows:

1. Description and operation of the train components/equipment.
2. Fault localisation and solution.
3. Maintenance and service.

See attached Appendix 1 figuring a preliminary details of the material to be studied in the course.

The theoretical explanations shall be given in the mornings and in the afternoons the vehicles shall be visited in the depot to perform on site practice of the maintenance tasks taught.

The maintenance staff who attend the course shall be provided with a paper copy of those parts of the operation and maintenance manuals relating to each part of the course.

This course shall be taught by upper and medium level technicians who have taken part in the project, tests and production of the vehicles, with the participation of technicians from the companies that supply the various items of equipment.

4. COURSE DATES

The dates of these courses shall be agreed to with the customer, taking into account the availability of vehicles and maintenance staff

5. NUMBER OF ATTENDEES

In principle, a course for a maximum of 10 persons is planned.

6. CHARACTERISTICS OF THE ATTENDEES

The courses are aimed as maintenance staff, who must be familiar with the usual existing systems on rail vehicles.

7. RESOURCES REQUIRED TO GIVE THE COURSE

To teach this course, the following resources must be provided by Málaga Metro

- Appropriate classroom for the course capacity
- Projector
- Access to metro units in the depot with the necessary tools to give practical classes.
- Access to depot parts and/or spare parts for practical parts of the course which do not necessarily require train units.

APPENDIX 1

PRELIMINARY TABLE OF CONTENTS OF THE MAINTENANCE STAFF TRAINING COURSE

CARBODY

A. Introduction and familiarisation

B. Description and operation

1. Carbody exterior.
2. Carbody interior

C. Fault localisation and solution.

D. Planned maintenance

3. Inspection and cleaning of intercom, windows, fairing, flooring, etc.
4. Replacing of windows, polyester parts, seats, hand rails, etc.
5. Lifting of carbody and placing on track.
6. Repair polyester parts, paintwork, etc.

CAB

A. Introduction and familiarisation

B. Description and operation

7. Control console
8. Thermal magnetic switches cabinet.
9. Relays and contactors cabinet

C. Fault localisation and solution.

D. Planned maintenance

COUPLER

E. Introduction and familiarisation

F. Description and operation

G. Fault localisation and solution.

H. Planned maintenance

ACCESS DOORS

I. Introduction and familiarisation

J. Description and operation

10. Leaves

11. Mechanism,

12. Indicators

13. Emergency control

K. Fault localisation and solution.

L. Planned maintenance

14. Visual inspections

15. Door adjustment

16. Replacement of leaves, mechanism, etc.

AIR CONDITIONING AND VENTILATION UNIT

M. Introduction and familiarisation

N. Description and operation

17. Compressor

18. Evaporator

19. Condenser

20. Control

O. Fault localisation and solution.

P. Planned maintenance

21. Access, replacement, inspection, and cleaning of compressor, evaporator, condenser, expansion valve, pipe , control

22. Control parameters

LIGHTING

Q. Introduction and familiarisation

R. Description and operation

23. Exterior lighting

24. Interior lighting

25. Emergency operation

S. Fault localisation and solution

T. Planned maintenance

26. Light and ballast replacement

BATTERY CHARGER AND CONVERTER

U. Introduction and familiarisation

V. Description and operation

27. Auxiliary converter

28. Battery charger

W. Fault localisation and solution.

X. Planned maintenance

29. Inspection and replacement of parts of the battery charger and converter

30. Safety standards

BATTERY

Y. Introduction and familiansation

Z. Description and operation

AA. Fault localisation and solution.

BB. Planned maintenance

31. Inspection, cleaning and filling of battery.

32. Safety standards

TRACTION EQUIPMENT

CC. Introduction and familiarisation

DD. Description and operation

33. Master Controller

34. Inverter

35. Motor

36. Circuit breaker

37. Brake resistors

EE. Fault localisation and solution.

FF. Planned maintenance

38. Inspection and cleaning of the traction items.

39. Replacement of lightning arrestors, circuit breaker, inverter, brake resistors, motor, etc.

40. Safety standards

BOGIES

GG. Introduction and familiarisation

HH. Description and operation

41. Underframe

42. Gear unit

43. Wheels

44. Axle-boxes

45. Primary & secondary suspension

46. Bogie brake

II. Fault localisation and solution

JJ. Planned maintenance

47. Visual inspections

48. Wheel wear

49. Height adjustment

BRAKING SYSTEM

KK. Introduction and familiarisation

LL. Description and operation

50. Hydraulic central unit

51. Hydraulic pipe

MM. Fault localisation and solution

NN. Planned maintenance

52. Inspection, cleaning and replacement of the brake items.

53. Safety standards.

COMMUNICATIONS SYSTEM

OO. Introduction and familiarisation

PP. Description and operation

QQ. Fault localisation and solution.

RR. Planned maintenance

PANTOGRAPH

SS. Introduction and familiarisation

TT. Description and operation

UU. Fault localisation and solution.

VV. Planned maintenance

PNEUMATIC EQUIPMENT

WW. Introduction and familiarisation

XX. Description and operation

54. Air production

55. Sanders

56. Flange lubrication

YY. Fault localisation and solution.

ZZ. Planned maintenance

Item	Description	Assumed no. (per Tram)	Minimun Spares Holding	Price (per unit)	Total price (Minimum Spares Holding x Price per Unit)	Total price (Minimum Spares Holding x Price per Unit)
1	Motor bogie (complete)	3	4	182.118 €	728.473 €	£539.216
2	Trailer bogie (complete)	1	2	135.760 €	271.521 €	£200.980
3	Traction set including :	3	1	466.192 €	466.192 €	£345.075
	IGBT Traction inverter					
	Traction control unit ECON					
	Traction motors					
	Braking resistor					
	High speed circuit breaker					
	Mater controllers			Included above		
4	Gearbox	12	6	24.548 €	147.290 €	£109.024
5	Brake actuator (for motor bogie)	12	6	6.167 €	37.004 €	£27.391
6	Brake actuator (for trailer bogie)	4	2	6.374 €	12.747 €	£9.436
7	Wheel sets (complete, for one motor bogie)	6	6	24.548 €	147.290 €	£109.024
8	Wheel sets (complete, for one trailer bogie)	2	2	32.055 €	64.110 €	£47.454
9	Wheel rims (1 set)	1 set	2	7.912 €	15.824 €	£11.713
10	Emergency coupler	2	2	9.009 €	18.017 €	£13.336
11	Pantograph	1	2	13.232 €	26.465 €	£19.589
12	Battery charger	1	1	19.799 €	19.799 €	£14.656
13	Battery	1	1	6.990 €	6.990 €	£5.174
14	High Voltage control box	3			Included in traction	Included in traction
15	Cab air conditioning unit	2	3	18.110 €	54.329 €	£40.214
16	Saloon heating and ventilation unit	3	2	27.330 €	54.661 €	£40.460
17	Tram control computer	1	1	62.076 €	62.076 €	£45.949
18	Brake pump / Central hidraúlica	4	4	12.278 €	49.114 €	£36.354

TIE00899939_0987

Item	Description	Assumed no. (per Tram)	Minimun Spares Holding	Price (per unit)	Total price (Minimum Spares Holding x Price per Unit)	Total price (Minimum Spares Holding x Price per Unit)
19	Brake discs	16	16	2.059 €	32.947 €	£24.387
20	EVENT RECORDER	2	2	19.179 €	38.358 €	£28.392
21	Cab desk panel (without equipment) set	2	2	11.773 €	23.547 €	£17.429
22	Drivers seat	2	2	1.632 €	3.264 €	£2.416
23	Windscreen	2	8	4.186 €	33.489 €	£24.789
24	Door mechanism and leaf (double door)	10	5	10.175 €	50.873 €	£37.656
25	Door mechanism and leaf (single door)	4	2	8.593 €	17.186 €	£12.721
26	Saloon side window 1 set per tram	1 set	2	14.872 €	29.743 €	£22.016
27	Body front skirt (2 sets)	2 sets	6	3.257 €	19.541 €	£14.464
28	Body side skirts (2 sets)	2 sets	6	18.030 €	108.182 €	£80.076
29	Passenger seat unit (1 set per tram)	1 set	0	62.165 €	15.541 €	£11.504
30	Passenger seat squab (1 set per tram)	1 set	1	28.648 €	28.648 €	£21.205
31	Handrails (1 set)	1 set	1	13.752 €	6.876 €	£5.090
32	Cameras (1 set)	1 set	1	39.808 €	39.808 €	£29.466
33	Passenger Display unit (interior) (1 set)	1 set	2	25.700 €	51.400 €	£38.046
34	Passenger Display unit (exterior) (1 set)	1 set	2	6.853 €	13.706 €	£10.145
35	Complete Articulation assembly	5	3	22.349 €	67.048 €	£49.629
36	Sanding units (1 set)	1 set	1	10.361 €	10.361 €	£7.669
37	Suspension items (1 set)	1 set	1	27.013 €	27.013 €	£19.995
38	Energy absorption device (2 sets)	2 sets	2	18.394 €	36.788 €	£27.230
39	Flange Lubrication System	1 set	1	1.214 €	1.214 €	£898
40	Cab Front Shell Moulding	2	2	14.468 €	28.935 €	£21.418
41	Under-run Guard	2	2	6.785 €	13.570 €	£10.045
42	Exterior Ligthing Units		2	6.185 €	12.369 €	£9.156

TIE00899939_0988

Item	Description	Assumed no. (per Tram)	Minimun Spares Holding	Price (per unit)	Total price (Minimum Spares Holding x Price per Unit)	Total price (Minimum Spares Holding x Price per Unit)
43	Axle End Earthing Brush Units complete		4	3.394 €	13.576 €	£10.049
44	Speed Probes		1	1.885 €	1.885 €	£1.395
45	Roof Equipment Set of cases complete with fittings		0	To be defined	To be defined	To be defined
46	Cab Sun Blind	2	2	128 €	257 €	£190
47	Swan-neck cab microphone		4	342 €	1.368 €	£1.013
48	Electro-magnetic track brake unit complete		4	9.423 €	37.691 €	£27.899
49	Cab door complete with fittings		2	613 €	1.227 €	£908
50	Interior ligthingd cover(s)		1	7.387 €	7.387 €	£5.468
51	Pantograph head assembly		6	1.713 €	10.277 €	£7.607
52	Windscreen wiper arms complete		6	429 €	2.571 €	£1.903
53	Cab rear view camera		2	2.833 €	5.665 €	£4.193
	TOTAL				**2.974.212 €**	**£2.201.512**

NOTE: Currency hedged as per 29 April 2008 (0,7402 euro/GBP)

TIE00899939_0989

Part 5: Special Tools

The Tram Maintainer shall provide, at its own cost, any Special Tools or equipment necessary for the efficient and effective provision of the Services, either at the tram depot or other location as appropriate. Such Special Tools shall comprise any item or assembly of items that cannot be purchased from a normal industrial tool supplier within the UK and should include as a minimum, when necessary, but not be limited to:-

- diagnostic equipment including software for fault finding and system parameter setting (see table below)
- bogie-to-wheel lathe interface equipment. This Special Tools shall be supplied by Tramco if Tramco is the supplier of the wheel lathe. If Infraco is the supplier of the wheel lathe, then Infraco will be responsible for the supply of this Special Tools
- sub-system assembly jigs and fixtures
- hydraulic brake servicing equipment
- testing and maintenance equipment that must be designed, assembled or provided by the sub-system equipment manufacturers

This includes any Special Tool required at any time throughout the 30 year service life of the trams and shall include the updating or modification of any Special Tool that may be necessary during this period.

Item No.	Description	Assumed No.
1	HVAC Diagnostic Software	1
2	Traction Equipment Diagnostic Software	1
3	Brake Equipment Diagnostic Software	1
4	Door Equipment Diagnostic Software	1

[redacted]

Director/Authorised Signatory
tie LIMITED

[redacted]

Director/Authorised Signatory
CONSTRUCCIONES Y AUXILIAR DE FERROCARRILES S.A. (CAF)

This is Schedule 3 referred to in the foregoing Tram Supply Agreement between tie Limited and Construcciones Y Auxiliar de Ferrocarriles S.A. (CAF)

SCHEDULE 3

DEPOT SUB-LICENCE

1. In accordance with Clause 37 (*Use of the Depot*) of this Agreement the Client grants to the Tram Supplier a sub-licence to occupy and use the Depot on a non-exclusive basis on the terms set out below:

   1.1 subject to the Tram Supplier complying with the undertakings set out in paragraph 2 below, the Tram Supplier shall have the right during the Term to enter into, remain in and occupy those parts of the Depot within the area shaded yellow on the Depot Plan for the purposes of carrying out and performing the Tram Works and other obligations assumed by the Tram Supplier in accordance with this Agreement, including the use of those offices and facilities shaded yellow on the Depot Plan in connection with the performance of such Tram Works and other obligations; and

   1.2 the Client and the Tram Supplier agree that:

      1.2.1 the right to occupy granted pursuant to paragraph 1.1 above shall terminate on the earlier of the Termination Date or the Expiry Date;

      1.2.2 the Tram Supplier's occupation of the Depot will be as a sub-licensee only and shall confer on the Tram Supplier no greater interest than that of sub-licensee and in particular the sub-licence granted by paragraph 1.1 above shall not create a relationship of landlord and tenant;

      1.2.3 the benefit of the sub-licence granted by paragraph 1.1 above is personal to the Tram Supplier, its contractors and Sub-contractors and its and/or their work persons, servants and agents and is not assignable and the rights given in paragraph 1.1 above may only be exercised by the Tram Supplier, its contractors and Sub-contractors of any tier and its and/or their work persons, servants and agents.

2. The Tram Supplier agrees and undertakes to the Client that it shall (and shall procure that its sub-contractors shall):

   2.1 carry out the Tram Works with the minimum disruption to neighbouring properties to the Depot;

TIE00899939_0992

2.2 use the Depot only for, and to the extent necessary for, the purposes of carrying out and performing the Tram Works;

2.3 keep the Depot as clean and tidy as practicable and not make any physical alterations thereto;

2.4 provide cleaning, maintenance and access control services as required under Appendix 2 of this Licence;

2.5 not display any signs or notices at the Depot without the prior written consent of the Client, (such consent to be at the Client's absolute discretion);

2.6 upon termination of the licence, make good any damage which the Tram Supplier has caused to the Depot and remove all equipment and apparatus which it has brought into the Depot; and

2.7 not cause unreasonable interference to the other users of the Depot.

3. The Tram Supplier acknowledges that the Operator shall have responsibility for the co-ordination of health and safety issues at the Depot and the Tram Supplier hereby agrees to comply with any instruction from the Operator in relation to health and safety issues at the Depot.

EXECUTED for and on behalf of
CONSTRUCCIONES Y AUXILIAR DE FERROCARRILES S.A. (CAF)
at
on 2008 by:

Authorised Signatory _____

Full Name _____

Witness Signature _____

Full Name _____

Address _____

_____

TIE00899939_0993

APPENDIX 1

DEPOT PLAN

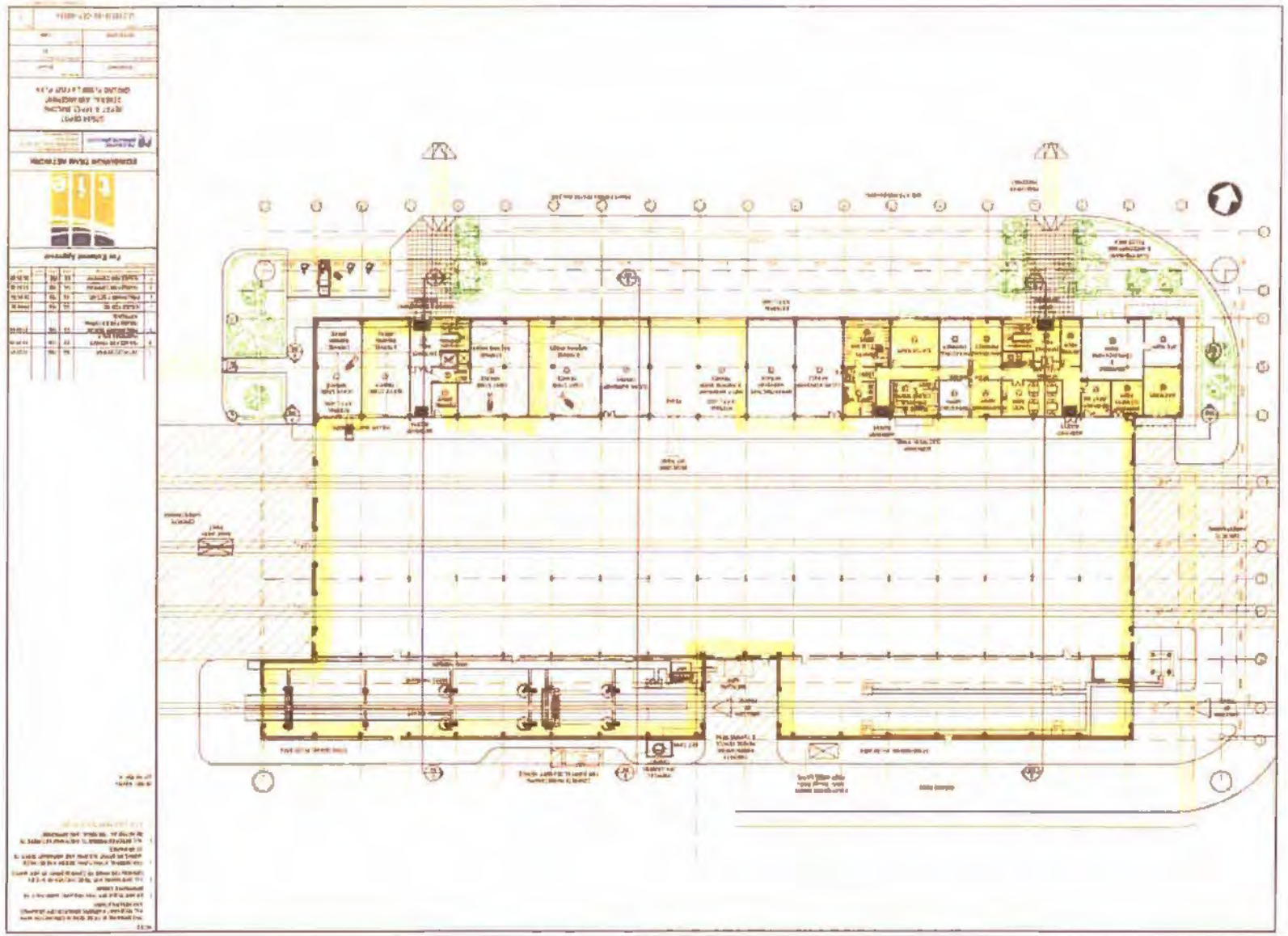

APPENDIX 2

See Schedule 2 Employer's Requirements Section 40 Table 83 and Table 89

[redacted]

Director/Authorised Signatory
tie LIMITED

[redacted]

Director/Authorised Signatory
CONSTRUCCIONES Y AUXILIAR DE FERROCARRILES S.A. (CAF)

TIE00899939_0995

This is Schedule 4 referred to in the foregoing Tram Supply Agreement between tie Limited and Construcciones Y Auxiliar de Ferrocarriles S.A. (CAF)

SCHEDULE 4

PROGRAMME

Part 1: Tram Manufacturing and Delivery Programme

For the purposes of Clause 41.22, the Agreed Commissioning Dates shall be:

Tram	Agreed Commissioning Date
1	11/06/10
2	11/06/10
3	11/06/10
4	11/06/10
5	11/06/10
6	12/07/10
7	12/07/10
8	11/08/10
9	11/08/10
10	11/08/10
11	10/09/10
12	10/09/10
13	12/10/10
14	12/10/10
15	12/10/10
16	11/11/10
17	11/11/10
18	11/11/10
19	10/12/10
20	10/12/10
21	10/12/10
22	11/01/11
23	11/01/11
24	11/01/11
25	11/02/11
26	11/02/11
27	11/02/11

SUPPLY OF 27 TRAMS FOR THE EDINBURGH TRAM NETWORK

PROJECT PLANNING

Id	Name	Start	Finish
1	**GENERAL**	**06/05/08**	**06/06/08**
2	NTP	06-05-08	06-05-08
3	**ENGINEERING**	**06/05/08**	**15/06/09**
4	BASIC ENGINEERING	06-05-08	31-07-08
5	MOCK-UP	**06/05/08**	**03/11/08**
6	DESIGN & MANUFACTURING MOCK-UP	06-05-08	22-09-08
7	APPROVAL MOCK-UP	23-09-08	03-11-08
8	UNDERFRAME DESIGN	01-07-08	24-11-08
9	CARBODY DESIGN	29-08-08	08-01-09
10	LIST OF STEEL MATERIALS	04-06-08	04-06-08
11	INSTALLATIONS DESIGN	24-10-08	14-04-09
12	INTERIORS & FINISHING DESIGN	25-11-08	15-05-09
13	BOGIES DESIGN	23-07-08	15-01-09
14	**1st TRAMSET PROCUREMENT**	**06/05/08**	**01/07/09**
15	SYSTEMS	**06/05/08**	**01/07/09**
16	SPECIFICATIONS	06-05-08	04-06-08
17	SELECTION OF SUPPLIERS	21-05-08	01-07-08
18	ORDERS	17-06-08	29-07-08
19	INTERFACE 1- Systems Interface Basic Definition	30-07-08	24-09-08
20	INTERFACE 2- Systems Interface Complete Definition	25-09-08	24-11-08
21	MANUFACTURING & PURHASHING & TESTING	27-05-08	01-07-09
22	DELIVERY PREASSEMBLIES COMPONETS	15/04/09	15/04/09
23	DELIVERY FRIST EQUIPMENT	15-04-09	01-07-09
24	OTHERS COMPONENTS & MATERIALS	**05/06/08**	**26/06/09**
25	STEEL MATERIALS	05-06-08	24-11-08
26	CARBODY COMPONETNS	24-10-08	18-03-09
27	INSTALATIONS COMPONENTS	15-12-08	08-05-09
28	INTERIORS & FINISHING COMPONENTS	17-02-09	25-05-09
29	**1st TRAM MANUFACTURING & TESTING**	**14/11/08**	**04/08/10**
30	BODYSHELLS MANUFACTURING	**14/11/08**	**02/08/09**
31	**JIGS & TOOLING MANUFACTURING**	**14/11/08**	**16/03/09**
32	FRAME TOOLING	14-11-08	09-02-09
33	BODYSHELL TOOLING	12-01-09	16-03-09
34	**1st BODYSHELL MANUFACTURING**	**26/11/08**	**18/04/09**
35	FIRST PIECES LOT	25-11-08	07-01-09
36	FRAME'S SUBASSEMBLIES	08-01-09	06-02-09
37	FRAME ASSEMBLY & WELDING	09-02-09	12-03-09
38	FRAME FAI	13-03-09	13-03-09
39	BODYSHELL'S SUBASSEMBLIES	09-02-09	13-03-09
40	BODYSHELL ASSEMBLY & WELDING	16-03-09	15-04-09
41	BODYSHELL FAI	15-04-09	16-04-09
42	REMAINING BODYSHELLS MANUFACTURING	**18/02/09**	**02/06/09**
43	2nd BODYSHELL MANUFACTURING	18-02-09	22-04-09

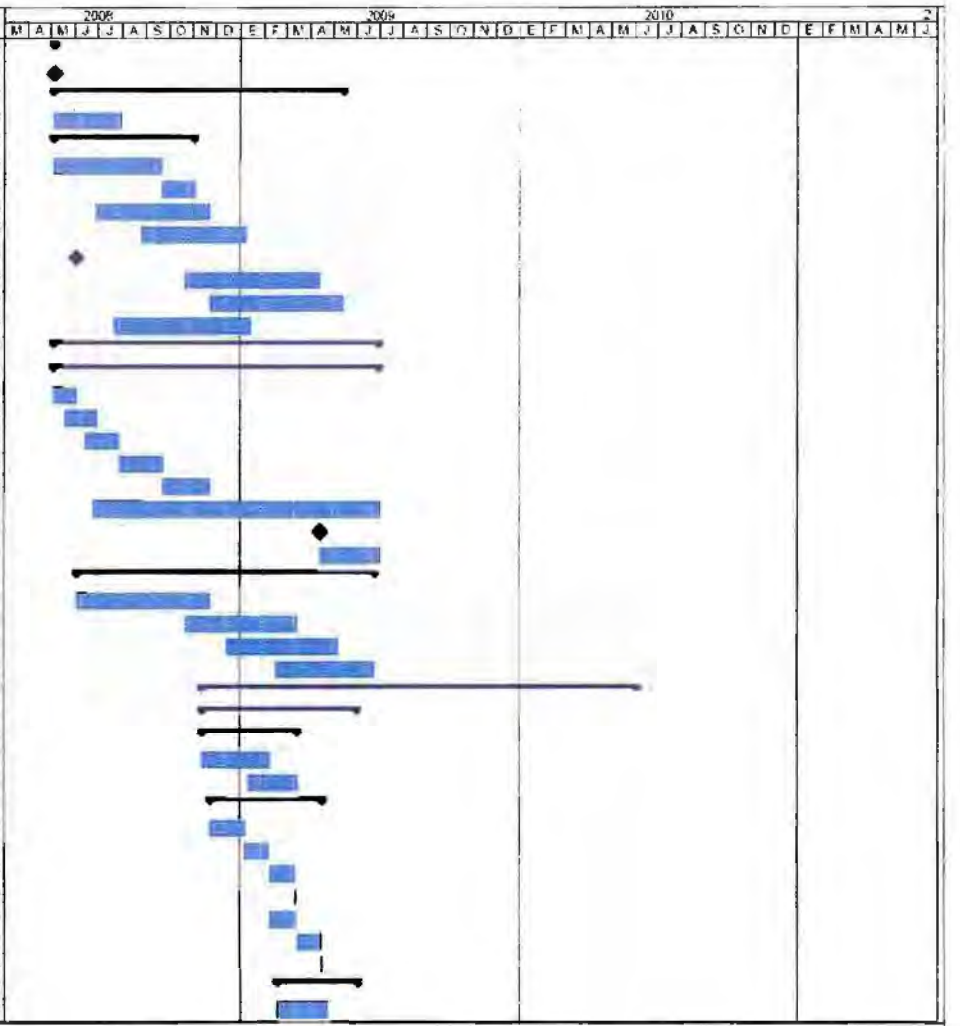

V1 1 of 7 23/04/2008

SUPPLY OF 27 TRAMS FOR THE EDINBURGH TRAM NETWORK

PROJECT PLANNING

Id	Name	Start	Finish
44	3rd BODYSHELL MANUFACTURING	27/02/09	04/05/09
45	4th BODYSHELL MANUFACTURING	09/03/09	12/05/09
46	5th BODYSHELL MANUFACTURING	16/03/09	19/05/09
47	6th BODYSHELL MANUFACTURING	23/03/09	26/05/09
48	7th BODYSHELL MANUFACTURING	30/03/09	02/06/09
49	FINISHING	17/04/09	25/11/09
50	1st MODULE FINISHING	17/04/09	08/10/09
51	PAINTING	17/04/09	08/05/09
52	FINISHING	08/05/09	08/10/09
53	REMAINING MODULES FINISHING	23/04/09	25/11/09
54	2nd MODULE FINISHING	23/04/09	16/10/09
55	3rd MODULE FINISHING	05/05/09	27/10/09
56	4th MODULE FINISHING	13/05/09	04/11/09
57	5th MODULE FINISHING	20/05/09	11/11/09
58	6th MODULE FINISHING	27/05/09	18/11/09
59	7th MODULE FINISHING	03/06/09	25/11/09
60	1st TRAMSET BOGIES MANUFACTURING	20/04/09	10/11/09
61	1st TRAM FACTORY TESTS	09/10/09	05/01/10
62	1st TRAM DYNAMIC TESTS	06/01/10	12/03/10
63	1st TRAM TRANSPORT	15/03/10	08/04/10
64	DELIVERY OF THE 1st TRAM	09/04/10	09/04/10
65	COMMISSIONING OF THE 1st TRAM	12/04/10	04/06/10
66			

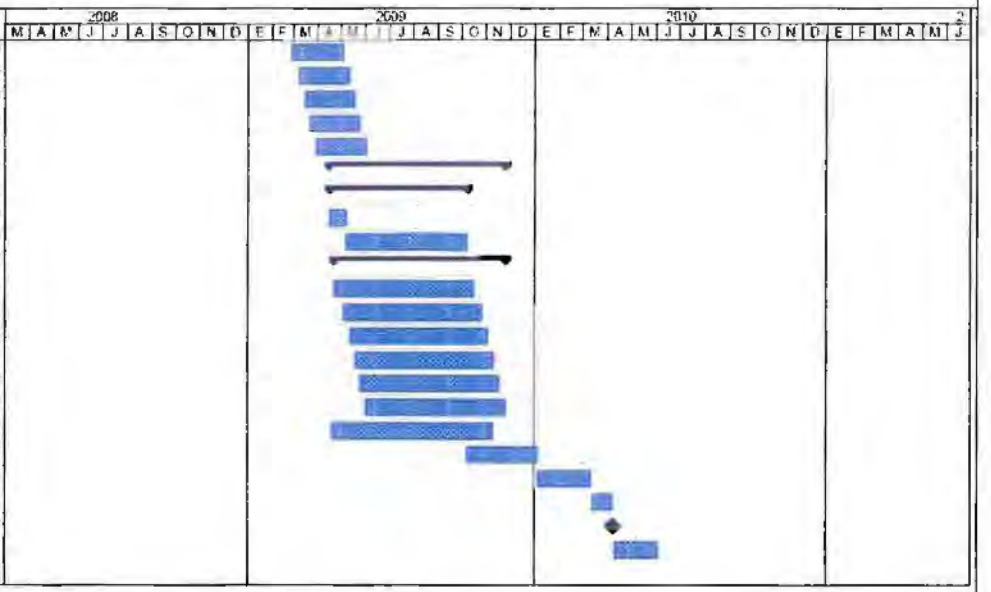

SUPPLY OF 27 TRAMS FOR THE EDINBURGH TRAM NETWORK

PROJECT PLANNING

Id	Name	Start	Finish
67	**REMAINING TRAM's**	19/03/09	04/02/11
68	**2nd Tram**	19/03/09	04/06/10
69	BODYSHELLS MANUFACTURING & FINISHING	18/03/09	24/12/09
70	FACTORY & DYNAMIC TESTS	09/12/09	19/04/10
71	TRANSPORT	19/04/10	10/05/10
72	DELIVERY OF THE TRAM	10/05/10	10/05/10
73	COMMISSIONING OF THE TRAM	10/05/10	04/06/10
74	**3rd Tram**	07/04/09	04/06/10
75	BODYSHELLS MANUFACTURING & FINISHING	07/04/09	20/01/10
76	FACTORY & DYNAMIC TESTS	05/01/10	19/04/10
77	TRANSPORT	19/04/10	10/05/10
78	DELIVERY OF THE TRAM	10/05/10	10/05/10
79	COMMISSIONING OF THE TRAM	10/05/10	04/06/10
80	**4th Tram**	20/04/09	04/06/10
81	BODYSHELLS MANUFACTURING & FINISHING	20/04/09	09/02/10
82	FACTORY & DYNAMIC TESTS	25/01/10	19/04/10
83	TRANSPORT	19/04/10	10/05/10
84	DELIVERY OF THE TRAM	10/05/10	10/05/10
85	COMMISSIONING OF THE TRAM	10/05/10	04/06/10
86	**5th Tram**	20/05/09	04/06/10
87	BODYSHELLS MANUFACTURING & FINISHING	20/05/09	01/03/10
88	FACTORY & DYNAMIC TESTS	12/02/10	19/04/10
89	TRANSPORT	19/04/10	10/05/10
90	DELIVERY OF THE TRAM	10/05/10	10/05/10
91	COMMISSIONING OF THE TRAM	10/05/10	04/06/10
92	**6th Tram**	19/06/09	05/07/10
93	BODYSHELLS MANUFACTURING & FINISHING	19/06/09	16/03/10
94	FACTORY TESTS	26/02/10	01/06/10
95	TRANSPORT	01/06/10	15/06/10
96	DELIVERY OF THE TRAM	15/06/10	15/06/10
97	COMMISSIONING OF THE TRAM	15/06/10	05/07/10
98	**7th Tram**	21/07/09	05/07/10
99	BODYSHELLS MANUFACTURING & FINISHING	21/07/09	31/03/10
100	FACTORY TESTS	15/03/10	01/06/10
101	TRANSPORT	01/06/10	15/06/10
102	DELIVERY OF THE TRAM	15/06/10	15/06/10
103	COMMISSIONING OF THE TRAM	15/06/10	05/07/10
104	**8th Tram**	17/09/09	04/08/10
105	BODYSHELLS MANUFACTURING & FINISHING	17/09/09	15/04/10
106	FACTORY TESTS	30/03/10	01/07/10
107	TRANSPORT	01/07/10	15/07/10
108	DELIVERY OF THE TRAM	15/07/10	15/07/10
109	COMMISSIONING OF THE TRAM	15/07/10	04/08/10

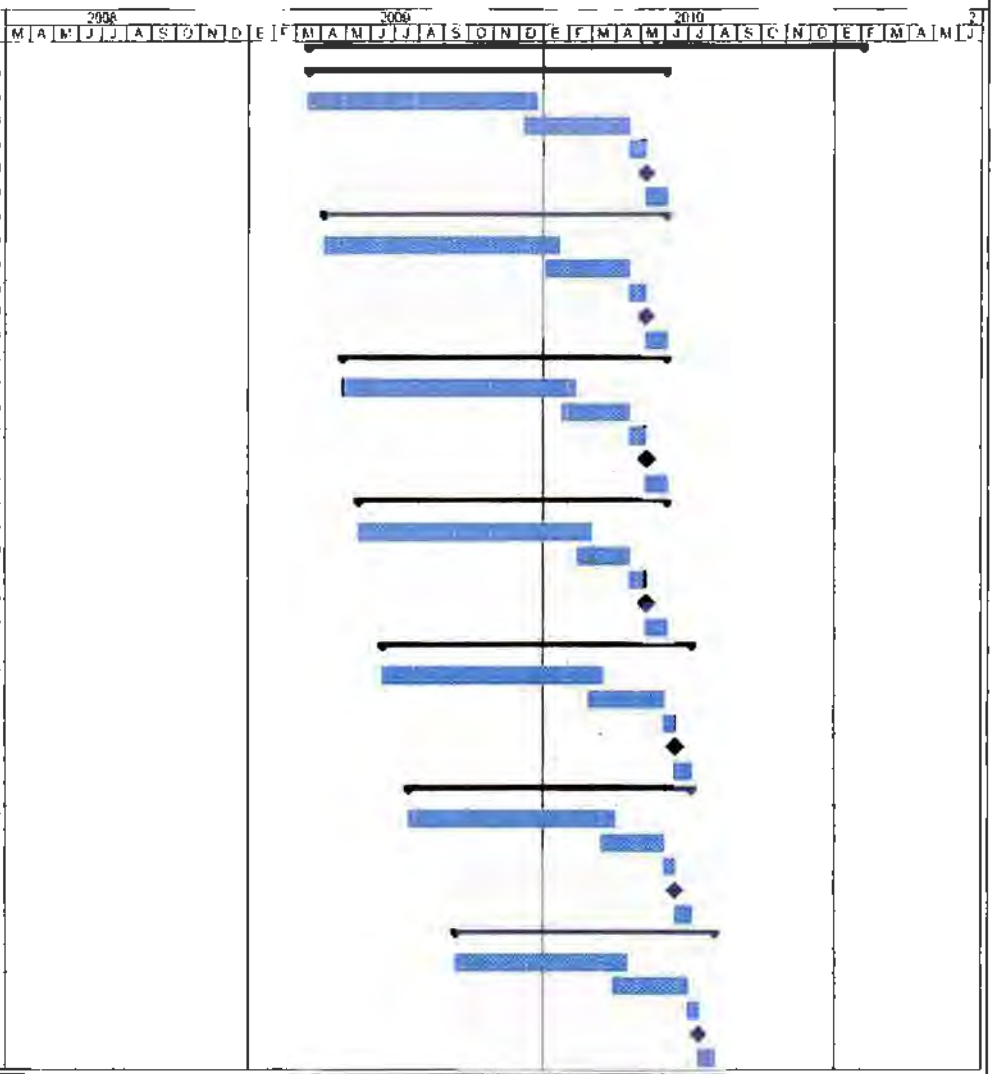

V1 3 of 7 23-04/2008

SUPPLY OF 27 TRAMS FOR THE EDINBURGH TRAM NETWORK

PROJECT PLANNING

Id	Name	Start	Finish
110	**9th Tram**	**20/10/09**	**04/08/10**
111	BODYSHELLS MANUFACTURING & FINISHING	20/10/09	30/04/10
112	FACTORY TESTS	14/04/10	01/07/10
113	TRANSPORT	01/07/10	15/07/10
114	DELIVERY OF THE TRAM	15/07/10	15/07/10
115	COMMISSIONING OF THE TRAM	15/07/10	04/08/10
116	**10th Tram**	**20/11/09**	**04/08/10**
117	BODYSHELLS MANUFACTURING & FINISHING	20/11/09	17/05/10
118	FACTORY TESTS	29/04/10	01/07/10
119	TRANSPORT	01/07/10	15/07/10
120	DELIVERY OF THE TRAM	15/07/10	15/07/10
121	COMMISSIONING OF THE TRAM	15/07/10	04/08/10
122	**11st Tram**	**09/12/09**	**03/09/10**
123	BODYSHELLS MANUFACTURING & FINISHING	09/12/09	01/06/10
124	FACTORY TESTS	18/05/10	02/08/10
125	TRANSPORT	02/08/10	16/08/10
126	DELIVERY OF THE TRAM	16/08/10	16/08/10
127	COMMISSIONING OF THE TRAM	16/08/10	03/09/10
128	**12nd Tram**	**24/12/09**	**03/09/10**
129	BODYSHELLS MANUFACTURING & FINISHING	24/12/09	16/06/10
130	FACTORY TESTS	02/08/10	02/08/10
131	TRANSPORT	02/08/10	16/08/10
132	DELIVERY OF THE TRAM	16/08/10	16/08/10
133	COMMISSIONING OF THE TRAM	16/08/10	03/09/10
134	**13rh Tram**	**15/01/10**	**06/10/10**
135	BODYSHELLS MANUFACTURING & FINISHING	15/01/10	01/07/10
136	FACTORY TESTS	18/06/10	01/09/10
137	TRANSPORT	01/09/10	15/09/10
138	DELIVERY OF THE TRAM	15/09/10	15/09/10
139	COMMISSIONING OF THE TRAM	15/09/10	05/10/10
140	**14th Tram**	**01/02/10**	**06/10/10**
141	BODYSHELLS MANUFACTURING & FINISHING	01/02/10	15/07/10
142	FACTORY TESTS	05/07/10	01/09/10
143	TRANSPORT	01/09/10	15/09/10
144	DELIVERY OF THE TRAM	15/09/10	15/09/10
145	COMMISSIONING OF THE TRAM	15/09/10	05/10/10
146	**15th Tram**	**16/02/10**	**06/10/10**
147	BODYSHELLS MANUFACTURING & FINISHING	16/02/10	02/08/10
148	FACTORY TESTS	20/07/10	01/09/10
149	TRANSPORT	01/09/10	15/09/10
150	DELIVERY OF THE TRAM	15/09/10	15/09/10
151	COMMISSIONING OF THE TRAM	15/09/10	05/10/10
152	**16th Tram**	**25/02/10**	**04/11/10**

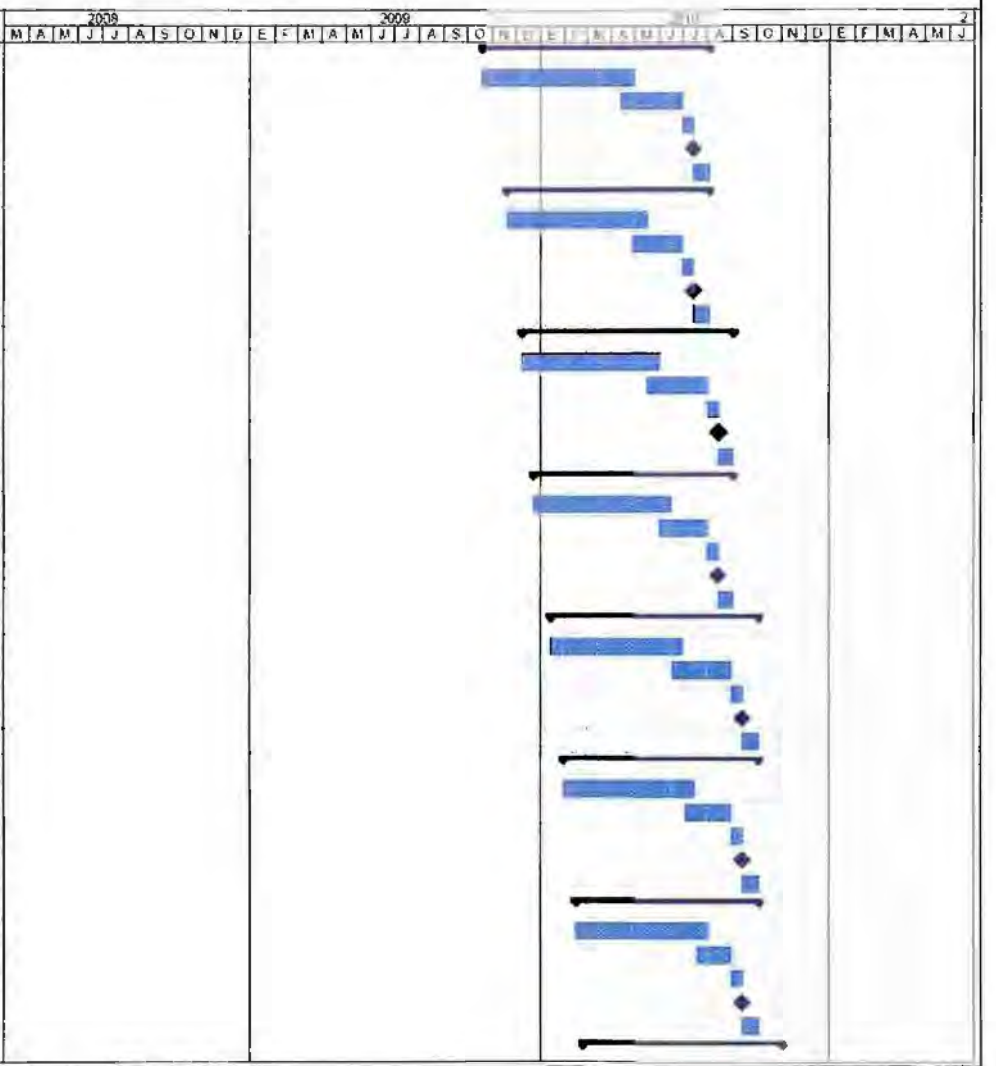

SUPPLY OF 27 TRAMS FOR THE EDINBURGH TRAM NETWORK

PROJECT PLANNING

Id	Name	Start	Finish
153	BODYSHELLS MANUFACTURING & FINISHING	25/02/10	11/08/10
154	FACTORY TESTS	04/08/10	01/10/10
155	TRANSPORT	01/10/10	15/10/10
156	DELIVERY OF THE TRAM	15/10/10	15/10/10
157	COMMISSIONING OF THE TRAM	15/10/10	04/11/10
158	**17th Tram**	**08/03/10**	**04/11/10**
159	BODYSHELLS MANUFACTURING & FINISHING	08/03/10	20/08/10
160	FACTORY TESTS	13/08/10	01/10/10
161	TRANSPORT	01/10/10	15/10/10
162	DELIVERY OF THE TRAM	15/10/10	15/10/10
163	COMMISSIONING OF THE TRAM	15/10/10	04/11/10
164	**18th Tram**	**17/03/10**	**04/11/10**
165	BODYSHELLS MANUFACTURING & FINISHING	17/03/10	31/08/10
166	FACTORY TESTS	25/08/10	01/10/10
167	TRANSPORT	01/10/10	15/10/10
168	DELIVERY OF THE TRAM	15/10/10	15/10/10
169	COMMISSIONING OF THE TRAM	15/10/10	04/11/10
170	**19th Tram**	**26/03/10**	**03/12/10**
171	BODYSHELLS MANUFACTURING & FINISHING	26/03/10	09/09/10
172	FACTORY TESTS	01/09/10	01/11/10
173	TRANSPORT	01/11/10	15/11/10
174	DELIVERY OF THE TRAM	15/11/10	15/11/10
175	COMMISSIONING OF THE TRAM	15/11/10	03/12/10
176	**20th Tram**	**06/04/10**	**03/12/10**
177	BODYSHELLS MANUFACTURING & FINISHING	06/04/10	20/09/10
178	FACTORY TESTS	10/09/10	01/11/10
179	TRANSPORT	01/11/10	15/11/10
180	DELIVERY OF THE TRAM	15/11/10	15/11/10
181	COMMISSIONING OF THE TRAM	15/11/10	03/12/10
182	**21st Tram**	**15/04/10**	**03/12/10**
183	BODYSHELLS MANUFACTURING & FINISHING	15/04/10	29/09/10
184	FACTORY TESTS	21/09/10	01/11/10
185	TRANSPORT	01/11/10	15/11/10
186	DELIVERY OF THE TRAM	15/11/10	15/11/10
187	COMMISSIONING OF THE TRAM	15/11/10	03/12/10
188	**22nd Tram**	**26/04/10**	**04/01/11**
189	BODYSHELLS MANUFACTURING & FINISHING	26/04/10	08/10/10
190	FACTORY TESTS	30/09/10	01/12/10
191	TRANSPORT	01/12/10	15/12/10
192	DELIVERY OF THE TRAM	15/12/10	15/12/10
193	COMMISSIONING OF THE TRAM	15/12/10	04/01/11
194	**23rd Tram**	**05/05/10**	**04/01/11**
195	BODYSHELLS MANUFACTURING & FINISHING	05/05/10	19/10/10

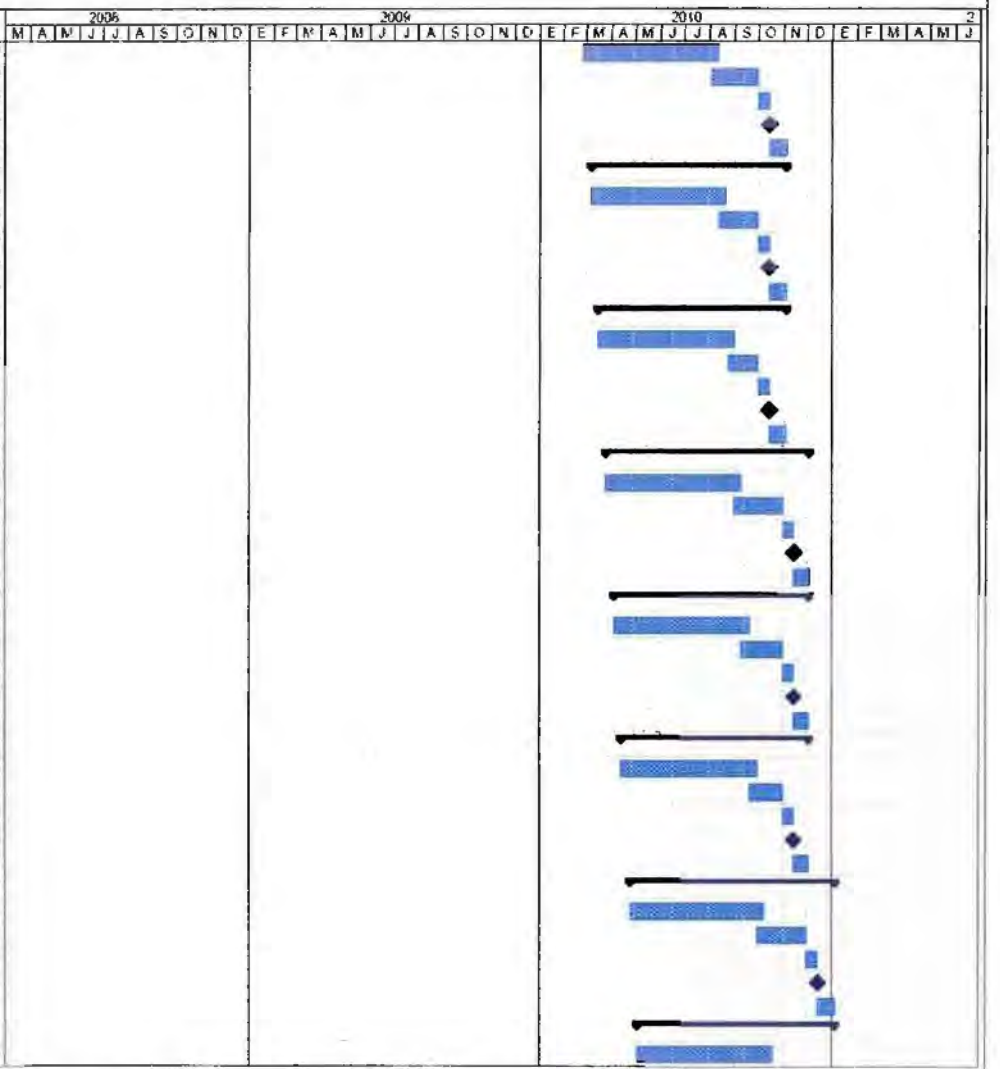

V1 5 of 7 23/04/2008

SUPPLY OF 27 TRAMS FOR THE EDINBURGH TRAM NETWORK

PROJECT PLANNING

Id	Name	Start	Finish
196	FACTORY TESTS	11/10/10	01/12/10
197	TRANSPORT	01/12/10	15/12/10
198	DELIVERY OF THE TRAM	15/12/10	15/12/10
199	COMMISSIONING OF THE TRAM	15/12/10	04/01/11
200	24th Tram	**14/06/10**	**04/01/11**
201	BODYSHELLS MANUFACTURING & FINISHING	14/06/10	29/10/10
202	FACTORY TESTS	20/10/10	01/12/10
203	TRANSPORT	01/12/10	15/12/10
204	DELIVERY OF THE TRAM	15/12/10	15/12/10
205	COMMISSIONING OF THE TRAM	15/12/10	04/01/11
206	25th Tram	**25/06/10**	**04/02/11**
207	BODYSHELLS MANUFACTURING & FINISHING	25/06/10	08/11/10
208	FACTORY TESTS	01/11/10	03/01/11
209	TRANSPORT	03/01/11	17/01/11
210	DELIVERY OF THE TRAM	17/01/11	17/01/11
211	COMMISSIONING OF THE TRAM	17/01/11	04/02/11
212	26th Tram	**03/08/10**	**04/02/11**
213	BODYSHELLS MANUFACTURING & FINISHING	03/08/10	17/11/10
214	FACTORY TESTS	10/11/10	03/01/11
215	TRANSPORT	03/01/11	17/01/11
216	DELIVERY OF THE TRAM	17/01/11	17/01/11
217	COMMISSIONING OF THE TRAM	17/01/11	04/02/11
218	27th Tram	**14/08/10**	**04/02/11**
219	BODYSHELLS MANUFACTURING & FINISHING	14/08/10	26/11/10
220	FACTORY TESTS	19/11/10	03/01/11
221	TRANSPORT	03/01/11	17/01/11
222	DELIVERY OF THE TRAM	17/01/11	17/01/11
223	COMMISSIONING OF THE TRAM	17/01/11	04/02/11
224			

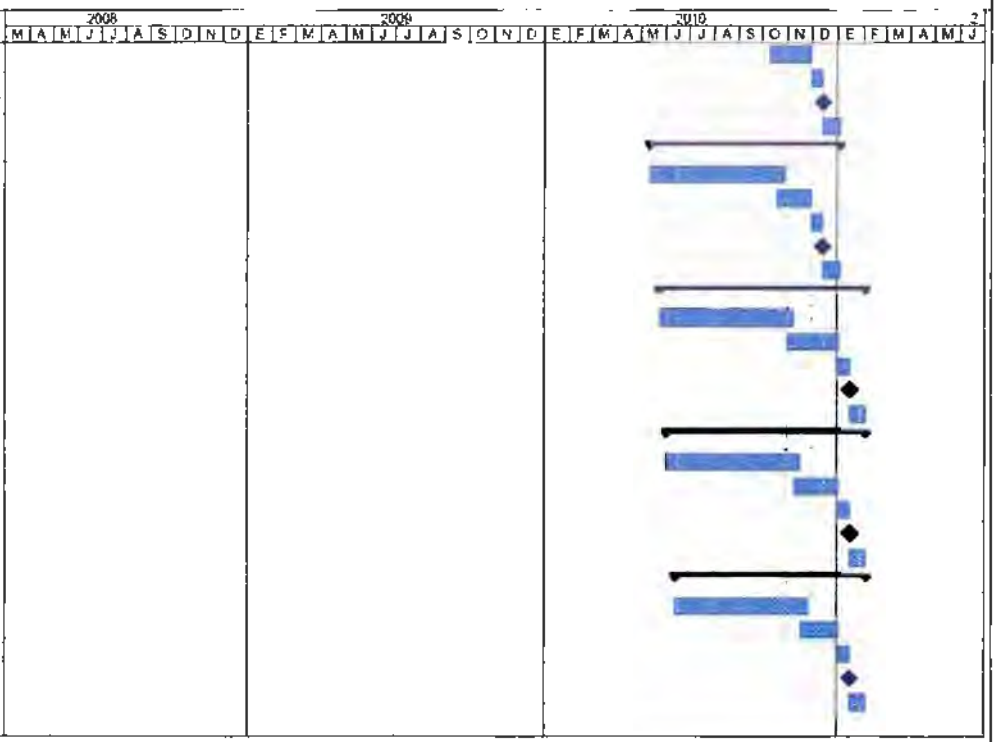

SUPPLY OF 27 TRAMS FOR THE EDINBURGH TRAM NETWORK

PROJECT PLANNING

ID	Name	Start	Finish	Duration
225	REMAINING TRAM's DELIVERED	[illegible]	[illegible]	150 d
226	2nd, 3rd, 4th & 5th Trams	Mon 10/05/10	Mon 10/05/10	0 d
227	6th & 7th Trams	Tue 15/06/10	Tue 15/06/10	0 d
228	8th, 9th & 10th Trams	Thu 15/07/10	Thu 15/07/10	0 d
229	11st & 12nd Trams	Mon 16/08/10	Mon 16/08/10	0 d
230	13rd, 14th & 15th Trams	Wed 15/09/10	Wed 15/09/10	0 d
231	16th, 17th & 18th Trams	Fri 15/10/10	Fri 15/10/10	0 d
232	19th, 20th & 21st Trams	Mon 15/11/10	Mon 15/11/10	0 d
233	22nd, 23rd & 24th Trams	Wed 15/12/10	Wed 15/12/10	0 d
234	25th, 26th & 27th Trams	Mon 17/01/11	Mon 17/01/11	0 d
235	REMAINING TRAM's COMMISSIONED	Fri 04/06/10	Fri 04/02/11	175 d
236	2nd, 3rd, 4th & 5th Trams	Fri 04/06/10	Fri 04/06/10	0 d
237	6th & 7th Trams	Mon 05/07/10	Mon 05/07/10	0 d
238	8th, 9th & 10th Trams	Wed 04/08/10	Wed 04/08/10	0 d
239	11st & 12nd Trams	Fri 03/09/10	Fri 03/09/10	0 d
240	13rd, 14th & 15th Trams	Tue 05/10/10	Tue 05/10/10	0 d
241	16th, 17th & 18th Trams	Thu 04/11/10	Thu 04/11/10	0 d
242	19th, 20th & 21st Trams	Fri 03/12/10	Fri 03/12/10	0 d
243	22nd, 23rd & 24th Trams	Tue 04/01/11	Tue 04/01/11	0 d
244	25th, 26th & 27th Trams	Fri 04/02/11	Fri 04/02/11	0 d
245	SHADOW RUNNING	Mon 16/04/11	Sat 16/07/11	65 d
246	OPENING PASSENGER CARRYING SERVICE	Sat 16/07/11	Sat 16/07/11	0 d
247	TRAINING COURSE	Fri 05/03/10	Mon 12/07/10	112 d
248	1st course	Fri 05/03/10	Thu 11/03/10	5 d
249	2nd course	Tue 06/07/10	Mon 12/07/10	5 d

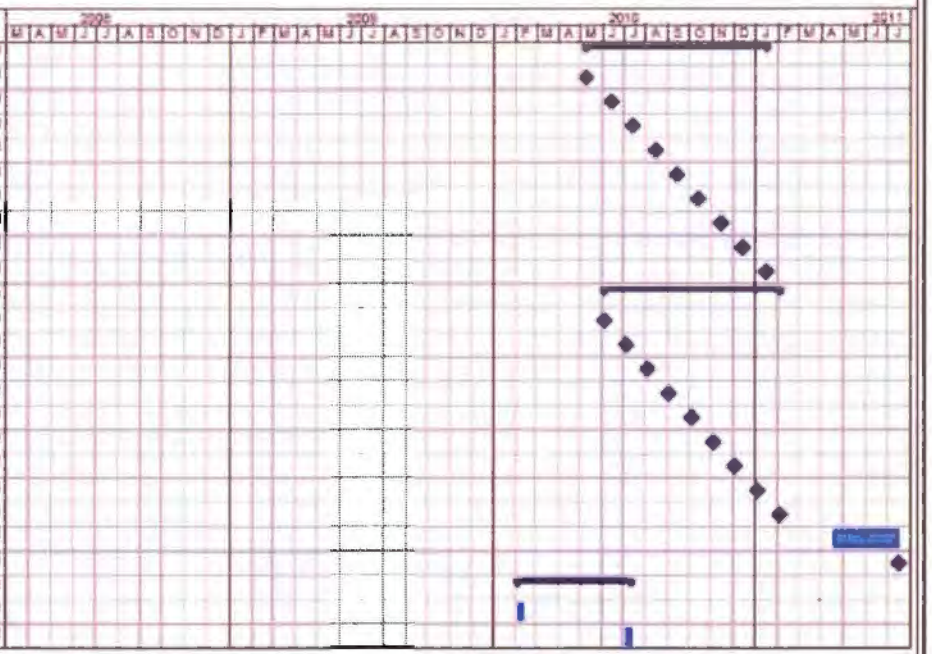

V1 7 of 7 23/04/2008

Part 2: Tram Documentation Delivery Programme

General

The following programme presents the Tram Documentation which will be produced by CAF in order to define the vehicle, its driving practice and Maintenance. This programme is based on a four step basis, as follows:

Step 1: Format and outline contents

Step 2: Draft documents for the first two years (until mid 2009)

Step 3: Issue 1 (for two years during on track testing)

Step 4: Final documents (Nov 2010)

As an aid for reference, general time plan with some milestones which will be defined throughout this Schedule:

Step 1. Format and outline contents

In order to start up with engineering process of Tram definition, a drawing format proposal will be issued to **tie** during the next two weeks after the Effective Date.

This format proposal will typically include suggestion from CAF of drawings sizes (from A1 to A4 formats) and part table contents (to incorporate any logo and information **tie** may want to include). As a reference, please refer to drawings presented within CAF BAFO.

In addition to this, during this first stage the tram supplier will also produce and deliver to **tie** a general drawing index and structure, based on the general organisation by engineering groups followed by the tram supplier for all their vehicles design and construction projects.

Step 2. Documents for the first two years

As a general comment, the objective during the time period from the beginning of the project until the first stages of on track testing is to advance on providing Tram Documentation, in some cases as a draft to be reviewed by **tie** prior to the first formal issue. The following documents, a brief description of their contents and time schedule are provided below.

- **Style Guide**

TIE00899939_1004

This document is a reference one used to define and specify the general format, overall contents and basic preliminary indexes of the different manuals to be produced (see below). The Style Guide is to be used in order to define such details with the documentation generated by the different suppliers of equipments involved in the Tram.

The Style Guide will be issued by August 2008 and will be submitted to tie for comments. After this **tie** review, due to the impact further modifications would suppose, Style Guide will be considered as final issue and will be distributed to suppliers.

All documentation will be produced using xml or html formats, and copies of all documents will be delivered in electronic format.

- **Tram Final Design Submission**

"Tram Final Design Submission" shall include all drawings representing the Final Stage Submission as designed in accordance with the Specification.

The tram supplier shall provide digitally formatted copy in standard vector image file format (.plt).

The levels of drawings are organised from general Group, general assemblies and subassemblies down to final individual components and parts. The tram supplier shall provide drawings level 0 (Groups), level 1 (General assemblies) and eventually, level 2 (Main subassemblies) where this is found necessary to complement the level 1 description. It should be noted that, as the Edinburgh Tram project will be based on previous vehicle projects as Sevilla Tram, any non modified part or assembly will keep its former drawing and occasionally could be integrated within the Tram Design Drawings delivered to **tie**.

Drawing Language: All text shall be in British English, together with the corresponding Spanish translation.

The "Tram Final Design Submission" will be delivered to **tie** during August 2008.

- **Tram Final Design Drawings**

"Tram Final Design Drawings" shall include all drawings representing the finished Vehicle or Unit in its entirety as designed in accordance with the Specification-

The tram supplier shall provide digitally formatted copy in standard vector image file format (.plt).

TIE00899939_1005

The levels of drawings are organised from general Group, general assemblies and subassemblies down to final individual components and parts. The tram supplier shall provide drawings level 0 (Groups), level 1 (General assemblies) and eventually, level 2 (Main subassemblies) where this is found necessary to complement the level 1 description. It should be noted that, as the Edinburgh Tram project will be based on previous vehicle projects as Sevilla Tram, any non modified part or assembly will keep its former drawing and occasionally could be integrated within the Tram Design Drawings delivered to **tie**.

Drawing Language: All text shall be in British English, together with the corresponding Spanish translation.

The first collection of Tram Final Design Drawings will be delivered to tie during the final engineering stages, that is, beginning of 2009.

Approvals/Consents

Documenting evidence that all required approvals and consents have been obtained require to be provided prior to January 2009.

- **Operating Manual - draft**

This document is principally for use by traincrew and other operating staff and shall be in a style and format to present simple descriptions. The documents shall contain details of requirements for preparation and disposal of the Units by traincrew, fault finding procedures for traincrew, driving and operating instructions for traincrew. The document shall contain a description of the Unit with a General Arrangement drawing of the Tram, figures and pictures to facilitate its use.

A draft Operating Manual will be delivered to **tie** for their review and comments, two months in advance of the beginning of track tests.

- **Maintenance Manual (Commissioning) - draft**

In order to allow proper maintenance during the on track tests and shadow running, CAF will produce a reduced Maintenance Manual, focussed on the required maintenance jobs that are necessary for this period. A more detailed description of contents from the complete Maintenance Manual can be found below (refer to Step 4. Final Documents – Maintenance Maintenance)

TIE00899939_1006

A draft Maintenance Manual will be delivered to **tie** for their review and comments, two months in advance of the beginning of on track tests.

Step 3. Issue 1

In coincidence with the beginning of the on track dynamic testing, CAF will issue the first formal version of the following documents:

- **As Built Drawings**

  With the definition of 'As Built Drawings' CAF will deliver to **tie** the same level of information as per Tram Design Drawings, updated to the time As Built Drawings are issued.

  Those As Built Drawings update will incorporate all design modifications introduced from the first Tram Design Drawings, mainly generated to apply improvements found necessary during the Factory tests and Tram inspections.

- **Operating Manual – Issue 1**

  First Issue of this document will be delivered to **tie** incorporating their comments and amendments from the draft Operating Manual provided as per above. This Manual will be also used as the main reference documentation during Drivers operational training.

- **Maintenance Manual (Commissioning) – Issue 1**

  As well as per Operational Manual, a first Issue of this Maintenance Manual (Commissioning) will be delivered to **tie** incorporating their comments and amendments from the draft document provided as per above.

Step 4. Final documents

Finally, as the main milestone in the documentation delivery, CAF will issue definitive versions of the already issued documents, covering all different modifications and amendments generated during the on track dynamic testing of the Trams. In addition, CAF will deliver the rest of Manuals that complete the full set of documentation, with brief descriptions of their contents as follows:

- **As Built Drawings**

  In this point, the As Built Drawings update will incorporate all the rest of design modifications introduced, mainly generated due to improvements found during on track tests.

TIE00899939_1007

The final collection of As Built Drawings will be delivered to **tie** on October 2010.

- **Maintenance Manual**

Taking the reduced Maintenance Manual for Commissioning as the basis document, CAF will complete the full contents of this Manual for a comprehensive maintenance of the Trams with no time limitation. The contents of this Manual would typically include the following:

a) Vehicle Maintenance Instruction (VMI)

The VMI is principally for use by staff involved in servicing and Maintenance. It shall cover job descriptions for examination work and any other jobs required on a seasonal basis, or following equipment failure.

This will include seasonal precautions and post incident testing. The VMI shall also include the periodicities at which the specific Maintenance is to be carried out. Any changes to such periodicities must be discussed with and agreed in writing with the Purchaser before implementation.

Technical procedures required as a result of work arising from an examination shall be included and indexed in a separate Maintenance procedure section of each schedule. Alternatively, the information required may be obtained by reference to another document, e.g. the Vehicle Overhaul Instruction or the Component Overhaul Instructions.

b) Vehicle Overhaul Instruction (VOI)

The VOI is principally for use by staff involved in overhaul. It shall contain overhaul requirements, the periodicities, abnormal work arising and details for removal/refitting and on Vehicle testing of components. It shall make reference to component overhaul instructions, and other documents relevant to overhaul, i.e. drawings and safety data sheets.

The Maintenance Manual will be delivered to **tie** on November 2010.

- **Technical Instruction Manual (TIM)**

The aim of the TIM is to provide information for reference when more difficult faults or problems occur. It will also be used for future reference by technical staff, particularly by the Purchaser. It shall contain sections as general descriptions, functional description included detailed fault finding instructions, which will be used in conjunction with drawings and

TIE00899939_1008

schematics; details of special tools and equipment, instructions for their use, maintenance and calibration; and Fault Finding Booklet (FFB).

Technical Instruction Manual will be delivered to **tie** on December 2010.

- **Illustrated List of Components**

This document will contain a list of spare components and parts within the Tram design, with illustrated figures in 3D (where possible, 2D figures as a complement), in order to allow for an easy identification.

Illustrated List of Components will be delivered to **tie** on February 2011.

TIE00899939_1009

Part 3: NOT USED

TIE00899939_1010

Edimburgh tramnetwork

QUALITY PLAN

Revision level: Issue 1.00, 27.09.2006 for Tender

Approved:	Antonio Campos	Project Manager	27.09.06	
Checked:	Aitor Galarza	CAF Quality Manager	27.09.06	
Produced:	Javier Ganuza	Project Quality Manager	27.09.06	
	Name	Function	Date	Signature

This is an unpublished work the copyright in which vests in Construcciones y Auxiliar de Ferrocarriles, S.A.. All rights reserved. The information contained herein is the property of Construcciones y Auxiliar de Ferrocarriles, S.A. No part may be reproduced or used except as authorised by contract or other permission. The copyright and the foregoing restriction on reproduction and use extend to all media in which this information may be embodied.

REVISIONS

Issue	Date	Revised in document	Remarks
1.00	27.09.2006	First Edition	For Tender purpose

DISTRIBUTION

Copy No.	Name	Function / Department

0. CONTENTS

Page

1. INTRODUCTION **5**

1.1. PURPOSE 5

1.2. SCOPE 5

2. RELATED DOCUMENTS **5**

3. GLOSSARY **5**

4. QUALITY SYSTEM **6**

4.1. DOCUMENT REVIEW 6

4.2. PROCEDURES 6

4.3. WORK INSTRUCTIONS 6

5. MANAGEMENT RESPONSABILITIES **6**

6. TRAINING OF CAF PERSONNEL **6**

7. PLANNING **7**

7.1. CONTRACT REVIEW 7

7.2. PROJECT TIME PLANS 7

7.3. PROJECT REPORTING 7

7.4. DESIGN & DEVELOPMENT CONTROL 7

7.4.1. GENERAL 7

7.4.2. DESIGN AUTHORITY 7

7.4.3. INTERNAL DESIGN REVIEW 8

7.4.4. EXTERNAL DESIGN REVIEW 8

7.4.5. MONITORING AND ASSESSMENT 8

7.4.6. CONFIGURATION MANAGEMENT & CHANGE CONTROL 8

7.4.7. CONCESSIONS 8

7.5. PURCHASING 8

7.5.1. VENDOR CONTROL 8

7.5.2. PURCHASE ORDERS 9
7.5.3. PURCHASER SUPPLIED MATERIAL 9
7.6. MANUFACTURING CONTROL 9
7.6.1. SPECIAL PROCESSES 9
7.6.2. QUALITY RECORDS 9
7.6.3. INSPECTION AND TEST PLAN 10
7.6.4. PROJECT DOCUMENTATION 10
7.6.5. DOCUMENT CONTROL 11
7.7. IDENTIFICATION AND TRACEABILILTY 11
7.8. INSPECTION 11
7.8.1. PURCHASED MATERIALS RECEIVING INSPECTION 11
7.8.2. IN PROCESS AND FINAL INSPECTION 11
7.9. TESTING 12
7.10. CONTROL OF INSPECTION, MEASURING AND TEST EQUIPMENT 12
7.11. HANDLING, STORAGE, PACKING AND DESPATCH 12
7.12. COMMISSIONING 12
7.13. PURCHASER VERIFICATION 12
7.14. ACCOMMODATION AND ASSISTANCE 13
8. MEASUREMENT, ANALYSIS AND IMPROVEMENT 13
8.1. CUSTOMER SATISFACTION 13
8.2. CONTROL OF NON CONFORMING MATERIAL 13
8.3. QUALITY AUDITS 13
APPENDIX 1 CAF'S PROCEDURES 14

1. INTRODUCTION

1.1 Purpose

The Quality Plan describes the procedures and controls that will be applied by Construcciones y Auxiliar de Ferrocarriles, S.A. (CAF) in order to satisfy the requirements of the Agreement between Edimburgh tramnetwork and CAF to design, manufacture, supply, deliver and maintenance of the tram units

The present document is titled "Quality Plan" and it will subsequently be supported by an specific Test and Inspection Plan described in section 4.5 of the present document.

1.2 Scope

This Quality Plan is mandatory on all stages of the contract from initial review of the contract to delivery, acceptance, maintenance and warranty period of the trains.

2. RELATED DOCUMENTS

ISO 9001/2000	Quality Systems
CAF	Quality Assurance Manual, Vehicles Division
CAF	Procedures Manual
EN287	Approval Testing of Welders for Fusion Welding
EN288	Specification and Approval of Welding Procedures for Metallic Materials

3. GLOSSARY

CAF	Construcciones y Auxiliar de Ferrocarriles, S.A, Spain
Purchaser	Edinburgh tramnetwork, represented by the Chief Mechanical Engineer. Any reference to approvals or submissions to the Purchaser will refer to the Chief Mechanical Engineer.
Quality Plan	A document setting out the Quality Assurance policies and management organisation for the execution of the contract.
Test and Inspection Plan	A document setting out the specific inspections and quality controls to be carried out at every stage of the project.

4. QUALITY SYSTEM

The project will be undertaken within the framework of the quality assurance requirements detailed in the International Standards Organisation specifications ISO 9001.

This Standard is satisfied within UK and Spain by national standards, which are identical to the ISO 9001 standard.

Lloyds, Spain, registration number 950266 registers CAF as satisfying the requirements of UNE EN ISO 9001.

The Quality System of CAF is detailed in the Quality Assurance Manual. This manual contains a Quality Policy Statement signed by the General manager.

The Quality Manager holds copy of this manual.

4.1 Document Review

Prior to submission to the Purchaser this document has been reviewed by and approved by the Project Manager and the Quality Manager.

The document will be reviewed and approved by the Purchaser prior to be issued and distributed.

Any further issue of the present document will follow the same review and approval process.

4.2 Procedures

Documented procedures will be used according to the Quality System to control all the processes employed in every stage of the project.

These procedures are included in the Procedures Manual. A list of these procedures is also stated in Appendix 1.

4.3 Work Instructions

Work instructions will be prepared, if necessary, to detail particular processes, which require further detail than given in the Procedures Manual.

5. MANAGEMENT RESPONSABILITIES

The Quality Policy applicable to the supply of Railway Vehicles has the objective of supplying products and services conforming to our Customer's and legislative requirements.

To achieve this objective, this Quality Management System has been implemented as a device that allows the provision of objective proof in the form of data and information on the efficiency of our organisation and quality of our products. This shall lead to:

- Our Company attaining the desired quality at an optimum cost.
- Our customers increased satisfaction and their trust in our products.

The maintenance of this Quality Management System will allow us to establish "solid bases" on which the required activities shall be developed to promote the continuity and progressive improvement of our Company.

I request each Division and Department involved to strictly comply with the Quality Assurance Programme described in this manual.

[redacted]

Signed: **Andrés Arizkorreta**

General Manager

CAF Procedure P-02.01-BZ " Structure and Organization" describes and establishes in detail the functions and responsibilities for each of the CAF Departments managers.

Within the procedure P-05.05.BZ "Organization, planning and development of the project" it is established CAF appointment and entitlement of the key personal who will constitute the Project team. Additionally to the Project Manager, Quality Project Managerand and Project Lead Engineer, the Enginering department constitutes the different working teams and responsibles for each sub-department in the Technological Area.

6. TRAINING OF CAF PERSONNEL

Comprehensive training programmes are conducted to ensure that all CAF personnel are trained to a level commensurate with the tasks placed on them. The training is conducted for both technical and management skills. Training Programmes are co-ordinated by the Training Department. Where appropriate, personnel need to be certified to carry out specific safety related tasks.

7. PLANNING

7.1 Contract review

A contract review will be undertaken within the 3 months after the Contract signature or as described in other formal specific agreement between CAF and the Customer. The purpose of this review is to ensure that the requirements of the Contract are clearly understood by the project team, and can be achieved effectively and to ensure due emphasis is placed on the Quality requirements by all personnel involved in the Contract.

A record of the Contract Review meeting will be prepared and held within the Project records.

In addition there will be external reviews with the Purchaser or his representatives on contractual matters.

7.2 Project Time Plans

A Project Time Plan will be prepared for the Project and will include relevant input from major sub-contractors. The plan will show the design stages and time scales identifying key events in the programme such as Design Review, Manufacturing, Factory Acceptance Testing, Transport, Delivery, Commissioning and Acceptance testing. This processes are detailed in the related procedures P-05.05.BZ "Organization, planning and development of the project" and P-05.02-BZ "Design Development", P-05.03-BZ "Design verification and validation" and P-05.04 BZ. "Design Review"

The Project Time Plan will be reviewed on a regular basis. These reviews will be documented and all actions arising from the reviews recorded and followed.

7.3 Project Reporting

The Project Manager will report to the Purchaser about the status of the project at every project status meeting.

The Project Manager will meet with the Project Team on weekly basis to review project progress and prepare the project progress meetings.

Senior management meetings will be scheduled on a regular basis.

7.4 DESIGN & DEVELOPMENT CONTROL

7.4.1 General

All stages of the design will be documented. The procedures to be adopted during these stages are specified in the Quality Assurance Manual and supporting documentation.

7.4.2 Design Authority

The Design Authority is responsible for ensuring that the performance of the units satisfies both the design requirements and the contract conditions.

The Design Authority for this contract is the Project Engineer.

7.4.3 Internal Design Review

The Design Review Process will be employed to rigorously assess the suitability of the design for its intended task. Internal Design Reviews will be held at predetermined stages in the design.

The Design Review Process which will be employed is detailed in the procedure:

CAF Design Review P-05.04-BZ

7.4.4 External Design Review

In addition to the Internal Design Review process detailed in paragraph 5.3, External Design Reviews will also be undertaken with the Purchaser or representatives, according to the Contract as detailed in the Project Time Plan, and will be used as the control mechanism to formally approve the Design.

7.4.5 Monitoring and Assessment

Performance monitoring of the rolling stock will be undertaken to record all defects and these will be assessed and categorised.

7.4.6 Configuration management & Change Control

Configuration Management will be adopted to ensure control of all documentation, drawings, hardware and software.

All documentation and software will be formally controlled from the corresponding review.

Automated tools will be used by some parts of the organisation to achieve effective configuration management.

Configuration management process is detailed in the procedure:

- Modifications P-05.01-BZ

7.4.7 Concessions

All concessions will be dealt with according to the contract. This will cover all changes to the contract and must be agreed by both parties before carrying out the change.

7.5 PURCHASING

7.5.1 Vendor Control

The term "Vendor" includes suppliers of proprietary products and sub-contractors who supply products and services specifically tailored to the requirements of this project i.e. non-proprietary.

According to the Quality System all vendors are approved by CAF prior to contracts being placed and a list of approved vendors will be held within the Purchasing Department.

In the Purchased Materials Inspection and Test Plan (within the Test and Inspection Plan) it will be stated the controls imposed over each purchased material.

7.5.2 Purchase Orders

Purchase orders will only be placed with approved vendors according to CAF procedures. Orders need to be approved prior to issue.

7.5.3 Purchaser Supplied Material

Should any material be free issued by the Purchaser for use on the units then it will be held in store under the same conditions and procedures as for all other material required for the Project, except for being labelled as a Purchaser owned property.

7.6 MANUFACTURING CONTROL

Manufacturing will take place in accordance with the relevant documented procedures, a list of which is given in Appendix 1.

Manufacturing control procedures are mandatory on all stages of the manufacturing process and are supplemented by detailed work instructions where required.

Welders employed by CAF in the manufacturing of the bogies and body shells will be assessed and certified in accordance with EN 287. Welding will be undertaken in accordance with the requirements of EN 288. Other processes associated with the manufacture of the vehicle, e.g. the painting process, will employ skilled personnel.

7.6.1 Special Processes

Within the project the below listed "Special Processes" are defined.

The "Special Processes" are those which require a particularly detailed level of work instructions or operator skills in order to ensure that quality, safety and reliability is achieved. As the design advances additional Special Processes may be identified.

Painting Procedure	P-10.03-BZ Checking Painting Processes
Welding Procedure	P-10.04-BZ Checking Welding Processes
Cable Preparation Procedure	P-10.11-BZ Checking Cable Preparation Process

7.6.2 Quality Records

7.6.2.1 General Records

Records of the performance of the Quality System are held in accordance with the requirements of ISO 9001.

General Records include:

- Management Reviews
- Quality Audits and Reviews
- Training
- Calibration
- Procurement
- Manufacturing
- Purchaser Complaints

7.6.2.2 Project Specific Records

In addition to the above recording, project specific information will also be held including but not limited to:

- Contract Review
- Design Reviews
- As Made Drawings
- Test Reports
- Spare Parts
- Manuals

7.6.3 Inspection and Test Plan

According to the Quality System a Test and Inspection Plan will be produced to identify the controls to be applied at all stages of the project.

This Inspection and test Plan will be composed of three different documents:

- Purchased materials Inspection and Testing Plan.
- Manufacturing Inspection and Testing Plan.
- Test Plan (including factory and site testing).

The Test and Inspection Plan will be submitted to the Purchaser for review and approval.

This review allows for input from the Purchaser to indicate activities, which the Purchaser may wish to witness or declare as a mandatory hold point requiring his authorisation to proceed.

7.6.4 Project Documentation

Project specific documentation will be prepared as appropriate in agreement with the Purchaser.

7.6.5 Document Control

Document Control will be undertaken in accordance with the operating procedures of CAF Quality System, within the quality assurance requirements detailed in the ISO 9001.

7.7 IDENTIFICATION AND TRACEABILITY

Part identification will ensure that all components and sub-assemblies are controlled and ensure that only the correct part will be fitted to a higher level assembly.

Major assemblies will be marked with a serial number to ensure traceability of all assembly, inspection and test processes.

7.8 INSPECTION

7.8.1 Purchased Materials Receiving Inspection

The controls imposed to the purchased materials will be stated in the Purchased Materials Inspection and Test Plan (within the Test and Inspection Plan).

Inspection of all purchased materials and products is controlled by applicable procedures which identify the inspection criteria to be applied. Where applicable the procedures may be implemented prior to the material or product leaving the vendor's premises i.e. source inspection.

If the Purchaser requires his own material or product inspection prior to delivery this will be stated on the purchase order and will be highlighted in the Test and Inspection Plan.

Any work found to be unacceptable would be subject to the following courses of action:

- Reject material
- Re-work material
- material accepted by concession

When a decision to accept the material by concession is made then the process detailed in paragraph 6.2 will be applied.

7.8.2 In Process and Final Inspection

The controls imposed to the manufacturing process will be stated in the Manufacturing Inspection and Test Plan (within the Inspection and Test Plan).

Inspections at the appropriate stages defined in the Manufacturing Inspection and Test Plan will be undertaken to the appropriate standards. Evidence of inspection having been carried out will be held within the manufacturing documentation.

7.9 TESTING

Testing will be carried out in accordance with the Test Plan.

The Test Plan will include factory and site tests, type and routine tests.

7.10 CONTROL OF INSPECTION, MEASURING AND TEST EQUIPMENT

Inspection, measuring and test equipment used for product verification is periodically reviewed and calibrated.

The calibration process and the calibration period are stated in the corresponding procedures and standards of the Quality System.

7.11 HANDLING, STORAGE, PACKING AND DESPATCH

Finished products, having been finally inspected will be stored, packed and despatched in such a manner that no deterioration is guaranteed.

The process to manipulate, store, pack and deliver finished products will be conducted according to the corresponding procedures within the Quality System.

7.12 COMMISSIONING

Any commissioning activity will be undertaken in accordance with the corresponding procedures.

7.13 PURCHASER VERIFICATION

The Inspection and Test Plan will indicate activities in which the Purchaser wishes to be involved.

Two levels of Purchaser involvement has been identified:

Witness (W) Defined as a point in the programme, in which has been defined that the Purchaser witness is required. The Purchaser will be informed of the date, time and location of the activity. In case of non-attendance of the Purchaser the activity will continue as scheduled.

Hold (H) Defined as a point in the programme in which has been defined that the Purchaser wish to stop further progress of an activity until he witnessing it. Should the Purchaser fail to attend during a "Hold" activity then the Project Manager will immediately be informed and an appropriate course of action sought.

The Inspection and Test Plan submitted to the Purchaser will specify the planned locations for each activity. The specific official communication for the planned tests will be agreed (fax, email...).

7.14 ACCOMMODATION AND ASSISTANCE

The Purchaser or his representative will be permitted reasonable access to all facilities used during all stages of the Project.

It will be made available the following:

- Minutes of design review meetings
- Drawings and documents required for Design Review
- Manuals, procedures and instructions used within the Project.

8. MEASUREMENT, ANALISYS AND IMPROVEMENT

8.1 CUSTOMER SATISFACTION

These activities will be performed in accordance with P-08.02-BZ procedure.

8.2 CONTROL OF NON-CONFORMING MATERIAL

All non-conforming material will be identified and returned to its place of origin. This may be either external suppliers or internal departments.

The process to document an dispose of non-conforming materials will be conducted according to the corresponding procedures within the Quality System.

8.3 QUALITY AUDITS

Regular internal quality audits are conducted within the Quality System in accordance with the operating procedure:

- Internal Audits P-18.01-BZ

The Purchaser may wish to undertake audits. The Project Manager will provide facilities and assistance to allow such audits to take place at CAF or at his subcontractor's venues.

The Project Quality Manager will address actions arising from these audits.

APPENDIX 1. CAF'S PROCEDURES. PAGE 1 OF 2

CODE	DESCRIPTION
P-02.01-BZ	STRUCTURE AND ORGANISATION
P-02.02-BZ	SYSTEM REVIEW
P-03.01-BZ	QUALITY PLANNING
P-04.01-BZ	CONTRACT REVIEW
P-04.02-BZ	TENDERS
P-05.01-BZ	MODIFICATIONS
P-05.02-BZ	DESIGN DEVELOPMENT
P-05.03-BZ	DESIGN CHECKING AND VERIFICATION
P-05.04-BZ	DESIGN REVIEW
P-05.05-BZ	ORGANISATION, PLANNING AND DEVELOPMENT OF THE PROJECT
P-06.01-BZ	PROCEDURE PREPARATION AND CHECKING
P-06.02-BZ	DOCUMENT CHECKING
P-07.01-BZ	APPROVING SUPPLIERS
P-07.02-BZ	SUPPLIERS QUALITY SYSTEM AUDITS
P-07.03-BZ	PURCHASE MANAGEMENT OF MAIN EQUIPMENTS
P-07.04-BZ	PURCHASE DOCUMENTS
P-07.07-BZ	CONTINUAL DELIVERY ASSESSMENT
P-08.01-BZ	PRODUCTS SUPPLIED BY THE PURCHASER
P-08.02-BZ	CUSTOMER SATISFACTION MEASUREMENT
P-09.01-BZ	IDENTIFICATION AND TRACEABILITY
P-10.01-BZ	PREPARATION AND PUBLICATION OF PARTS LIST
P-10.02-BZ	CHECKING FINISHED PRE ASSEMBLY AND ASSEMBLY PROCESSES
P-10.03-BZ	CHECKING PAINTING PROCESSES
P-10.04-BZ	CHECKING WELDING PROCESSES
P-10.05-BZ	CHECKING STRUCTURE PROCESSES
P-10.06-Z	CHECKING DOOR-MANUFACTURING PROCESSES
P-10.07-BZ	CHECKING BOILER-SHOP PROCESSES
P-10.08-BZ	IRON/STEEL SURFACE TREATMENT
P-10.09-B	CHECKING FINISHED BOGIE ASSEMBLY PROCESS
P-10.11-BZ	CHECKING CABLE PREPARATION PROCESS

P-10.12-B	CHECKING TUBE MANUFACTURING PROCESS

APPENDIX 2. CAF'S PROCEDURES. PAGE 2 OF 2

CODE	DESCRIPTION
P-10.13-BZ	MAINTENANCE OF MANUFACTURE EQUIPMENTS
P-10.14-B	CHECKING OF MECHANISING PROCESS
P-10.15-B	CHECKING ASSEMBLY PROCESS
P-10.16-BZ	CHECKING ADHESIVE AND SEALING PROCESS
P-11.01-BZ	PLANNING MANUFACTURING QUALITY
P-11.02-BZ	FINAL TESTS AND TRIALS
P-11.03-BZ	INSPECTIONS AND TESTS ON RECEPTION
P-12.01-BZ	CHECKING INSPECTION, MEASURING AND TESTING EQUIPMENT
P-13.01-BZ	INSPECTION AND TEST STATUS
P-14.01-BZ	TREATMENT OF UNSUITABLE PRODUCTS DETECTED DURING MANUFACTURE
P-14.02-BZ	TREATMENT OF UNSUITABLE PRODUCTS AT RECEPTION
P-15.01-BZ	CORRECTIVE ACTIONS
P-16.01-BZ	HANDLING, STORAGE, PACKAGING AND DELIVERY
P-17.01-BZ	QUALITY RECORDS
P-18.01-BZ	INTERNAL AUDITS
P-19.01-BZ	TRAINING
P-20.01-BZ	TREATMENT OF T.A.S. INFORMATION
P-20.02-BZ	TRAINING OF T.A.S. PERSONNEL
P-20.03-BZ	T.A.S. MATERIAL MANAGEMENT
P-20.04-BZ	POST-SALES TECHNICAL ASSISTANCE
P-20.05-BZ	ORGANISATION OF THE POST-SALES TECHNICAL ASSISTANCE
P-21.01-BZ	STATISTICAL METHODS

Part 5 Tram Deliverables Programme

No	Deliverables	Date of deliverable	Requirement	Milestone Payment as detailed in Schedule 5 Part 1	Date of Milestone payment	Signing off Process
1	General drawing index and structure	10/06/2008	This is to be based on the general organisation by engineering groups followed by the tram supplier for all their vehicles design and construction projects.	Approval of Preliminary Design (Pre-Works Development Services)	21/06/2008	Tram Inspector is provided with all information and accepts information provided
2	Style Guide	12/02/2009	Style guide will be submitted to tie for comments	Approval of Final Design/Mock-Up (Pre-Works Development Services) date 08/11/2008. This will now extend to 28/02/08 as date of deliverable changed	28/02/2009	Tram Inspector is provided with all information and accepts information provided
3	Tram design drawings	05/05/2009	Drawings representing the finished vehicle or Unit in its entirety as designed in accordance with the specification	Obtaining Approvals and Consents for Tram (Pre-Works Development Services)	30/05/2009	Tram Inspector is provided with all information and accepts information provided
4	Operating Manual - draft	12/01/2010	The documents shall contain details of requirements for preparation and disposal of the Units by traincrew, fault finding procedures for traincrew, driving and operating instructions for traincrew. The document shall contain a description of the Unit with a General Arrangement drawing of the Tram, figures and pictures to facilitate its use.A draft Operating Manual will be delivered to tie for their review and comments, two months in advance of the beginning of on track tests.	Delivery of Preliminary Tram Maintenance Manuals	06/02/2010	Tram Inspector is provided with all information and accepts information provided
5	Maintenance manual (commissioning) - draft	12/01/2010	CAF will produce a reduced Maintenance Manual, focussed on the required maintenance jobs that are necessary for track tests and shadow running. A more detailed description of contents from the complete Maintenance Manual can be found below (refer to Step 4. Final Documents – Maintenance Maintenance). A draft Maintenance Manual will be delivered to tie for their review and comments, two months in advance of the beginning of on track tests.	Delivery of Preliminary Tram Maintenance Manuals	06/02/2010	Tram Inspector is provided with all information and accepts information provided

TIE00899939_1027

No	Deliverables	Date of deliverable	Requirement	Milestone Payment as detailed in Schedule 5 Part 1	Date of Milestone payment	Signing off Process
6	As Built Drawings - Issue 1	10/02/2010	With the definition of 'As Built Drawings' CAF will deliver to **tie** the same level of information as per Tram Design Drawings, updated to the time As Built Drawings are issued. Those As Built Drawings update will incorporate all design modifications introduced from the first Tram Design Drawings, mainly generated to apply improvements found necessary during the Factory tests and Tram inspections.	Delivery of 6th Tram	26/06/2010	Tram Inspector is provided with all information and accepts information provided
7	Operating Manual - issue 1	12/03/2010	First Issue of this document will be delivered to **tie** incorporating their comments and amendments from the draft Operating Manual draft. This Manual will be also used as the main reference documentation during Drivers operational training.	Delivery of 8th Tram	24/07/2010	Tram Inspector is provided with all information and accepts information provided
8	Maintenance manual (commissioning) - Issue 1	12/03/2010	A first Issue of this Maintenance Manual (Commissioning) will be delivered to **tie** incorporating their comments and amendments from the Maintenance manual draft document .	Delivery of 8th Tram	24/07/2010	Tram Inspector is provided with all information and accepts information provided
9	As Built Drawings - Final documentation	24/01/2011	In this point, the As Built Drawings update will incorporate all the rest of design modifications introduced, mainly generated due to improvements found during on track tests.	Delivery of all final Documentation	25/06/2011	Tram Inspector is provided with all information and accepts information provided
10	Maintenance Manual - Final documentation	05/03/2011	Taking the reduced Maintenance Manual for Commissioning as the basis document, CAF will complete the full contents of this Manual for a comprehensive maintenance of the Trams with no time limitation. The contents of this Manual would typically include vehicle Maintenance Instruction and vehicle Overhaul Instruction	Delivery of all final Documentation	25/06/2011	Tram Inspector is provided with all information and accepts information provided

TIE00899939_1028

No	Deliverables	Date of deliverable	Requirement	Milestone Payment as detailed in Schedule 5 Part 1	Date of Milestone payment	Signing off Process
11	Technical Instruction Manual - Final Documentation	05/04/2011	TIM is to provide information for reference when more difficult faults or problems occur. It will also be used for future reference by technical staff, particularly by the Purchaser. It shall contain sections as general descriptions, functional description included detailed fault finding instructions, which will be used in conjunction with drawings and schematics; details of special tools and equipment, instructions for their use, maintenance and calibration; and Fault Finding Booklet	Delivery of all final Documentation	25/06/2011	Tram Inspector is provided with all information and accepts information provided
12	Illustrated List of Components - Final Documentation	05/06/2011	This document will contain a list of spare components and parts within the Tram design, with illustrated figures in 3D (where possible, 2D figures as a complement), in order to allow for an easy identification.	Delivery of all final Documentation	25/06/2011	Tram Inspector is provided with all information and accepts information provided

[redacted]

Director/Authorised Signatory
tie LIMITED

[redacted]

Director/Authorised Signatory
CONSTRUCCIONES Y AUXILIAR DE FERROCARRILES S.A. (CAF)

This is Schedule 5 referred to in the foregoing Tram Supply Agreement between tie Limited and Construcciones Y Auxiliar de Ferrocarriles S.A. (CAF)

SCHEDULE 5

PAYMENTS

Part 1: Milestone Payment Schedule

PAYMENT MILESTONE SCHEDULE 1 to 27 TRAMS

TIE00899939_1030

No	Milestone Description		Payment Schedule Date (as shown on 12th March 2010)	Revised Date (as agreed on 12th May 2010)	Milestone Payment Amount	Cumulative Milestone Payments	Revised Cumulative Milestone Payment (as agreed on 12th May 2010)	Period End Date	Submission for payment	Client IPC Issued (Certificate Date)	Client IPC Certificate Date	Client IPC Certificate Amount	Amount to be Certified		Date Paid	Date Payment Due	Date Payment Due
	Contract Amount based on award on 12th May 2008	As defined in Train Supply Agreement Schedule 1 Milestone Payment Schedule. Payment is due on signing Train Supply Agreement			£[illegible]												AGREED ON 26/06/2008
	Advance payment made due to an early mobilisation bonus of £[illegible]					£0.00											
	Contract Award		[illegible]	[illegible]	[illegible]	£[illegible]	[illegible]										[illegible]
1	Receipt of Technically Compliant Design Documentation Deliverables	As defined in Train Supply Agreement Clause 21.1 and Schedule 1 Part 3 Train Deliverables Schedule 1 Part 1 Train requires to contain data that has not been delivered as payment can be made	[illegible]	[illegible]	[illegible]	£[illegible]	[illegible]	[illegible]	[illegible]	[illegible]	[illegible]	[illegible]	[illegible]	[illegible]	[illegible]	[illegible]	[illegible]
														[illegible]	[illegible]	[illegible]	[illegible]
2	Delivery of Non-Air Provider Development Vehicles	As defined in Train Supply Agreement Clause 21.1 Train requires to contain data that has been repaired and has passed that equipment can be made	[illegible]	[illegible]	[illegible]	£0.00	[illegible]	[illegible]	[illegible]	[illegible]	[illegible]	[illegible]	[illegible]			[illegible]	[illegible]
3	Receipt of Train Design Review for Train Driver Development Simulator	As defined in Train Supply Agreement Clause 21.1 and Schedule 1 Part 3 Train Deliverables Schedule 1 Part 1 Train requires to contain data that has been delivered as payment can be made	[illegible]	[illegible]	[illegible]	£[illegible]	[illegible]	[illegible]	[illegible]	[illegible]	[illegible]	[illegible]	[illegible]			[illegible]	[illegible]
4	Training Materials and Equipment for Train Driver Development Simulator	As defined in Train Supply Agreement Clause 21.1 Train requires to contain data that has been delivered and has passed that equipment can be made. Training of the first trainees will be based on the Training Materials and Equipment to be available for delivery and training can start	[illegible]	[illegible]	[illegible]	£[illegible]	[illegible]	[illegible]	[illegible]	[illegible]	[illegible]	[illegible]	[illegible]			[illegible]	[illegible]
5	Completion of the Train Offices	As defined in Train Supply Agreement Schedule 1 Milestone Payment Schedule. Train requires to contain data that has been delivered and has passed that equipment can be made	[illegible]	[illegible]	[illegible]	£[illegible]	[illegible]	[illegible]	[illegible]	[illegible]	[illegible]	[illegible]	[illegible]			[illegible]	[illegible]
6	Completion of the Passenger Accessibility	Delivery Requirements Clause 21.3 Factory Acceptance Tests. On satisfactory completion of the inspection of data and Notice of Factory Acceptance Type Certificate which will allow payment to be made. Cancel or contribution payment	[illegible]	[illegible]	[illegible]	£[illegible]	[illegible]	[illegible]	[illegible]	[illegible]	[illegible]	[illegible]	[illegible]			[illegible]	[illegible]
7	Completion of the Driver's Cab	Delivery Requirements Clause 21.3 Factory Acceptance Tests. On satisfactory completion of the inspection of data and Notice of Factory Acceptance Type Certificate which will allow payment to be made. Cancel or contribution payment	[illegible]	[illegible]	[illegible]	£[illegible]	[illegible]	[illegible]	[illegible]	[illegible]	[illegible]	[illegible]	[illegible]			[illegible]	[illegible]
8	Completion of the Train	Delivery Requirements Clause 21.3 Factory Acceptance Tests. On satisfactory completion of the inspection of data and Notice of Factory Acceptance Type Certificate which will allow payment to be made. Cancel or contribution payment	[illegible]	[illegible]	[illegible]	£[illegible]	[illegible]	[illegible]	[illegible]	[illegible]	[illegible]	[illegible]	[illegible]			[illegible]	[illegible]
9	Completion of Train Based Type Testing	Delivery Requirements Clause 21.3 Factory Acceptance Tests. On satisfactory completion of the inspection of data and Notice of Factory Acceptance Type Certificate which will allow payment to be made. Cancel or contribution payment	[illegible]	[illegible]	[illegible]	£[illegible]	[illegible]	[illegible]	[illegible]	[illegible]	[illegible]	[illegible]	[illegible]			[illegible]	[illegible]
10	Delivery of Reliability Train Maintenance Manual	Train Supply Agreement Schedule 1 Part 3 Train Deliverables Schedule 1	[illegible]	[illegible]	[illegible]	£[illegible]	[illegible]	[illegible]	[illegible]	[illegible]	[illegible]	[illegible]	[illegible]	31/03/2010	[illegible]	[illegible]	[illegible]
11	Delivery of 1st Train	Delivery Requirements Clause 21.3 Factory Acceptance Tests. On satisfactory completion of the inspection of data and Notice of Factory Acceptance Type Certificate which will allow payment to be made. Cancel or contribution payment	[illegible]	[illegible]	[illegible]	£[illegible]	[illegible]	[illegible]	[illegible]	[illegible]	[illegible]	[illegible]	[illegible]	2/08/2010	[illegible]	[illegible]	[illegible]
12	Commissioning of 1st Train	Delivery Requirements Clause 21.3 Site Commissioning Tests. On satisfactory completion of the inspection of data and Notice of Site Commissioning Type Test Certificate which will allow payment to be made. Cancel or contribution payment	[illegible]	[illegible]	[illegible]	£[illegible]	[illegible]	[illegible]	[illegible]	[illegible]	[illegible]	[illegible]	[illegible]			[illegible]	[illegible]
13	Delivery of 2nd Train	No Milestone	[illegible]	[illegible]	[illegible]	£[illegible]	[illegible]	[illegible]	[illegible]	[illegible]	[illegible]	[illegible]	[illegible]			[illegible]	[illegible]
14	Commissioning of 2nd Train	No Milestone	[illegible]	[illegible]	[illegible]	£[illegible]	[illegible]	[illegible]	[illegible]	[illegible]	[illegible]	[illegible]	[illegible]			[illegible]	[illegible]
15	Delivery of 3rd Train	No Milestone	[illegible]	[illegible]	[illegible]	£[illegible]	[illegible]	[illegible]	[illegible]	[illegible]	[illegible]	[illegible]	[illegible]			[illegible]	[illegible]
16	Commissioning of 3rd Train	No Milestone	[illegible]	[illegible]	[illegible]	£[illegible]	[illegible]	[illegible]	[illegible]	[illegible]	[illegible]	[illegible]	[illegible]			[illegible]	[illegible]
17	Delivery of 4th Train	No Milestone	[illegible]	[illegible]	[illegible]	£[illegible]	[illegible]	[illegible]	[illegible]	[illegible]	[illegible]	[illegible]	[illegible]			[illegible]	[illegible]
18	Commissioning of 4th Train	No Milestone	[illegible]	[illegible]	[illegible]	£[illegible]	[illegible]	[illegible]	[illegible]	[illegible]	[illegible]	[illegible]	[illegible]			[illegible]	[illegible]
19	Delivery of 5th Train	No Milestone	[illegible]	[illegible]	[illegible]	£[illegible]	[illegible]	[illegible]	[illegible]	[illegible]	[illegible]	[illegible]	[illegible]			[illegible]	[illegible]
20	Commissioning of 5th Train	No Milestone	[illegible]	[illegible]	[illegible]	£[illegible]	[illegible]	[illegible]	[illegible]	[illegible]	[illegible]	[illegible]	[illegible]			[illegible]	[illegible]
21	Delivery of 6th Train	No Milestone	[illegible]	[illegible]	[illegible]	£[illegible]	[illegible]	[illegible]	[illegible]	[illegible]	[illegible]	[illegible]	[illegible]			[illegible]	[illegible]
22	Commissioning of 6th Train	No Milestone	[illegible]	[illegible]	[illegible]	£[illegible]	[illegible]	[illegible]	[illegible]	[illegible]	[illegible]	[illegible]	[illegible]			[illegible]	[illegible]
23	Delivery of 7th Train	No Milestone	[illegible]	[illegible]	[illegible]	£[illegible]	[illegible]	[illegible]	[illegible]	[illegible]	[illegible]	[illegible]	[illegible]			[illegible]	[illegible]
24	Commissioning of 7th Train	No Milestone	[illegible]	[illegible]	[illegible]	£[illegible]	[illegible]	[illegible]	[illegible]	[illegible]	[illegible]	[illegible]	[illegible]			[illegible]	[illegible]
25	Delivery of 8th Train	No Milestone	[illegible]	[illegible]	[illegible]	£[illegible]	[illegible]	[illegible]	[illegible]	[illegible]	[illegible]	[illegible]	[illegible]			[illegible]	[illegible]
26	Commissioning of 8th Train	No Milestone	[illegible]	[illegible]	[illegible]	£[illegible]	[illegible]	[illegible]	[illegible]	[illegible]	[illegible]	[illegible]	[illegible]			[illegible]	[illegible]
27	Delivery of 9th Train	No Milestone	[illegible]	[illegible]	[illegible]	£[illegible]	[illegible]	[illegible]	[illegible]	[illegible]	[illegible]	[illegible]	[illegible]			[illegible]	[illegible]
28	Commissioning of 9th Train	No Milestone	[illegible]	[illegible]	[illegible]	£[illegible]	[illegible]	[illegible]	[illegible]	[illegible]	[illegible]	[illegible]	[illegible]			[illegible]	[illegible]
29	Delivery of 10th Train	No Milestone	[illegible]	[illegible]	[illegible]	£[illegible]	[illegible]	[illegible]	[illegible]	[illegible]	[illegible]	[illegible]	[illegible]			[illegible]	[illegible]
30	Commissioning of 10th Train	No Milestone	[illegible]	[illegible]	[illegible]	£[illegible]	[illegible]	[illegible]	[illegible]	[illegible]	[illegible]	[illegible]	[illegible]			[illegible]	[illegible]

[illegible]	[illegible]	[illegible]	[illegible]	[illegible]	[illegible]	[illegible]	[illegible]	[illegible]	[illegible]	[illegible]	[illegible]	[illegible]	[illegible]	[illegible]	[illegible]	[illegible]	[illegible]	[illegible]	[illegible]

PAYMENT MILESTONES SCHEDULE DEPOT EQUIPMENT

SCHEDULE 5 : PAYMENT MILESTONES SCHEDULE DEPOT EQUIPMENT

PAYMENT MILESTONES SCHEDULE- DEPOT EQUIPMENT					
No.	Milestone Description	Revised forecast date based on signature on 12th May 2008	Milestone Payment Proposed	£ of Total Milestone Payments	Revised forecast reporting period period
	Depot equipment		£740,009.03		
	Revised date	19/07/2008	20.00%	**£148,001.81**	04/2008-2009
1	Delivery of equipment	20/01/2010	65.00%	**£481,005.87**	11/2009-2010
2	Acceptance test of equipment	20/04/2010	10.00%	**£74,000.90**	01/2010-2011
3	Certificate of reliability	20/07/2010	5.00%	**£37,000.45**	04/2010-2011
4					
CROSS CHECKS			100.00%	£740,009.03	

Payment Period

Period End Date	Application for payment	Clause 38.6 issue of Interim Certificate	Clause 38.6 VAT Certificate to client	Clause 38 payment of Interim Certificate	Amount to be paid
	within 3 business days	10 Business days from application date	7 days from issue of Interim certificate	20 Business days from issue of VAT certificate	
19/07/2008	22/07/2008	05/08/2008	12/08/2008	09/09/2008	£148,001.81
06/02/2010	10/02/2010	24/02/2010	03/03/2010	31/03/2010	£481,005.87
01/05/2010	05/05/2010	19/05/2010	26/05/2010	23/06/2010	£74,000.90
24/07/2010	28/07/2010	11/08/2010	18/08/2010	15/09/2010	£37,000.45
					£740,009.03

AI/NH/310299/16/19098315.1

4

TIE00899939_1033

Part 2: Liquidated Damages for Weight

1. The Tram Supplier shall following the issue of the first Certificate of Tram Commissioning of a Tram arrange for that Tram to be weighed at the Depot (or such other place within the United Kingdom reasonably agreed by the Client) using independently operated and calibrated weighing equipment to determine the weight of the Tram, such weight to be verified and certified by the independent operator of the weighing equipment ("**Calibrated Tram Weight**").

2. If the Calibrated Tram Weight is greater than the Maximum Tram Weight then the Client will calculate the liquidated damages payable on the following basis:

$$LD = [CTW - MTW] \times AFK \times EP \times D \times NPV$$

where:

LD is the liquidated damages payable for excess tram weight;

CTW is the Calibrated Tram Weight;

MTW is the Maximum Tram Weight;

AFK is the annual fleet kilometres which shall be 2,695,055 per annum

EP is the unit cost of electricity to the Client (measured in £ per Kilowatt hour) as determined by the Client, acting reasonably, on the date that the Tram is weighed pursuant to paragraph 1 above;

D is the excess energy differential factor which shall be 0.0856 kilowatt-hours per tonne-kilometre.

NPV is the adjustment to give the Net Present Value over the design life of the Trams, which shall be 21.725. If LD is a value less than zero or zero, no liquidated damages will be payable under this provision.

3. Where the Tram Supplier makes any further modifications to any Tram which the Client believes (acting reasonably) to have materially increased the weight of the Tram, the Client shall be entitled to re-weigh the Tram in accordance with paragraph 1 above. If the Calibrated Tram Weight has increased the Client shall be entitled to recalculate the liquidated damages payable pursuant to paragraph 2 above, and shall pay the increase as liquidated damages representing the increased cost of running the modified Tram fleet.

TIE00899939_1034

Part 3: Tram Pricing Schedule

Tram Supply Figure Calculation **Date:- 'Based on hedged figures at 29th April 2008**

			Recommended Final Deal w/ currency hedge	Tram Price	Depot Equipment	Capital Maintenance mobilisation
BAFO figure (£77,304,571)			£53,780,037.00	£53,780,037.00		
Cost figure for final design work negotiated in discussions with CAF			£721,491.00	£721,491.00		
Revised figure			£53,058,546.00	£53,058,546.00		
Add mandatory variants (these are all savings)						
Mandatory Variant MV 6 Range standardisation (for 6 trams)			£0.00	£0.00		
Mandatory Variant MV 4 Exterior Displays with Shape Route (for 27 trams)						
Revised price confirmed 11th March 2008			£68,744.21	£68,744.21		
Mandatory Variant MV 5 Passenger Counting system (for 5 trams)			[illegible]	[illegible]		
Sub total			£52,671,053.66	£52,671,053.66		
Maintenance Mobilisation (these items are not subject to discount)			£0.00			£0.00
Sub Total			£52,671,053.66	£52,671,053.66		£0.00
Add options in variant bid that should be in base bid (these are all savings)						
CAF Variant CAF V2 complains with BS standards instead of BS regarding smoke and fire			[illegible]	[illegible]		
CAF Variant Spare parts saving			[illegible]	[illegible]		
Additional sub moulding agreed to be			£10,028.32	£10,028.32		
CAF Variant saving = Mock up			£0.00	£0.00		
Sub Total			£52,062,339.71	£52,062,339.71		£0.00
Discount for 20% first milestone (Tram Supply only)		1.00%	[illegible]	[illegible]		£0.00
			£51,531,810.38	£51,531,810.38		£0.00
Depot Equipment - Firm See below						
Depot Equipment - Provisional see below						
Maintenance Mobilisation			£2,130,696.00			£2,130,696.00
Sub Total			£53,662,506.38	£51,531,810.38	£0.00	£2,130,696.00
Currency fluctuation	BAFO £/Euro	0.693				
	Hedged £/Euro	0.7365	£3,345,194.59	£3,212,372.59	£0.00	£132,821.98
	% change	6.23%				
Sub total			£57,007,690.96	£54,744,182.97	£0.00	£2,263,507.98
	BAFO £/Euro	0.7402				
	Hedged £/Euro	0.7489	£309,740.24	£297,441.91	£0.00	£12,298.33
	% change	0.64%				
Depot equipment (includes hedging at 0.7399 as revised figures in Euros)			£739,709.11		£739,709.11	
Depot Equipment add hedging to (0.7402) 29th April 2008	BAFO £/Euro	0.7399				
	Hedged £/Euro	0.7402				
	% change	0.04%	£299.92		£299.92	
Revised method for sampling (proposed saving)			£0.00		£0.00	
Adjustment for CAF share of currency risk on supply, mobilisation, currency fluctuation but not on depot equipment	Half of 1%	0.50%	£0.00	£0.00	£0.00	£0.00
Total			£58,047,440.22	£55,041,624.88	£740,009.03	£2,275,806.32
Other items Mock-Up will be paid separately			£5,000.00			
Total Price			**£58,052,440.22**	**£55,041,624.88**	**£740,009.03**	**£2,275,806.32**

Summary

1. Tram	£55,041,624.88	
2. Depot equipment	£740,009.03	
3. Capital maintenance	£2,275,806.32	[illegible]
Total for contract	£58,057,440.22	[illegible]
4. Model (will seperately but has to be included in budget)	£5,000.00	
Grand Total	**£58,062,440.22**	

Note: Although in the overall cost calculation the cost of the mode has been pale separately

Note: No Adjustment for CAF on share of currency risk now as Depot equipment has changed

"Agreed Tram Price" (Tram price and Depot equipment) **£55,781,633.91**

TIE00899939_1035

Part 4: Depot Equipment Pricing Schedule

COLUMN 1	COLUMN 3/4		
Depot Equipment	**CAF Scope - Prices as per December 2007 Proposal**	**ER Section 29 Table 82 Ref.**	**CAF €**
			0.7399
Sand filling plant incorporated into under discussion	112,621	4.4	151,400
Overhead gantry crane	[redacted]	2.4	44,300
Wheel lathe	[redacted]	4.3	863,000
Paint booth (spec Boston) under discussion	270,359	4.6	365,400
Vehicle cleaning & washing facility	[redacted]	1.4	482,200
Tram lifting system	[redacted]	2.2	943,200
Spares & depot stock storage	[redacted]	3.1	
Forklift truck	[redacted]	2.9	37,800
High level access platform	[redacted]	2.3	
Shunter	131,850	2.1	176,200
Road/Rail vehicle & trailer	[redacted]	10.1 & 10.3	726,000
Rail groove cleaning equipment	[redacted]	1.5	
Tram cleaning equipment	21,975	1.1	29700
Tram pressure washer	3,418	1.2	4620
Floor scrubber	2,603	1.7	3518
Bogie workstands	2,442	2.6	3300
Other tram equip stands	21,096	2.7	28512
Tram lifting slings	2,930	2.13	3960
Windscreen remover	11,720	2.14	15840
Re-railing equipment	78,133	2.15	105600
Tram staging	1,172	3.2	1584
Tyre replacement equipment & wheel hub removal equipment	42,973	4.2	58080
Pantograph maintenance and load testing	7,813	4.7	10560
Suspension setting equipment	2,442	4.8	3300
Tram battery charger	5,251	7.1	6448
Other workshop equipment	204,989	(1)	
Infraco Pressure washer	[redacted]	1.3	
Parts Washer		1.6	
Mobile crane	20,510	2.5	27720
Accomodation Bogies	0	2.6	26400
Pallet Truck	[redacted]	2.10	
Hand Trolleys		2.11	
Infraco Lifting Slings		2.12	
General Staging		3.3	
Shelving		3.4	
Workbenches		3.5	
Cupboards		3.6	
COSHH Cupboard		3.7	
Workshop stools		3.8	
Machine tools		4.5	
Diesel generator		4.9	
Hand & Mobile tools		5.1	
Ferrous welding equipment		6.1	
Aluminium welding equipment		6.2	
Infrastructure battery chargers	See above	7.2	
Infrastructure & Fixed Systems test equipment	[redacted]	8.2	
Portable P&C grinders		9.1	
Track welding equipment		9.2	
Portable tamping equipment		9.3	
Portable lighting equipment		9.4	
Track measuring equipment		9.5	
Other road vehicles		10.2	
	739,709		

Note: Movement from Euro to Pound of 0.7399 upward to 0.7402 results in an additional £299.82 as a result the final fixed price for Depot Equipment carried forward to the summary table is £740,009.03.

[redacted]

Director/Authorised Signatory
tie LIMITED

Director/Authorised Signatory
CONSTRUCCIONES Y AUXILIAR DE FERROCARRILES S.A. (CAF)

TIE00899939_1036

This is Schedule 6 referred to in the foregoing Tram Supply Agreement between tie Limited and Construcciones Y Auxiliar de Ferrocarriles S.A. (CAF)

SCHEDULE 6

KEY PERSONNEL

Name	**JORGE PIQUERAS SERRANO – Deputy Technical Leader**		
Current Employer	**CONSTRUCCIONES Y AUXILIAR DE FERROCARRILES – CAF**		
Professional Qualifications	**MECHANICAL ENGINEER**		
Availability			
Relevant Experience to the Tram Supply Agreement			
Project	**Role and Responsibility (including identity of employer)**	**From**	**To**
NIR C3K DMU Vehicles	**PROJECT ENGINEER**	**2004**	**2007**
-	**Engineer of Structures Area (Technical Office)**	**2006**	**2007**

Name	**ALBERTO ALVAREDO ROMERO - Technical Leader**		
Current Employer			
Professional Qualifications	**ENGINEER**		
Availability	**YES**		
Relevant Experience to the Tram Supply Agreement			
Project	**Role and Responsibility (including identity of employer)**	**From**	**To**
SEVILLE TRAM	**PROJECT LEADER**	**2003**	**2007**
VELEZ MALAGA TRAM	**PROJECT LEADER**	**2005**	**2006**
MALAGA TRAM	**PROJECT LEADER**	**2006**	**2008**
ALGIERS TRAM	**PROJECT MANAGER**	**2003**	
OSLO METRO	**PROJECT MANAGER**	**2002**	
ATHENS METRO	**PROJECT MANAGER**	**2001**	
NORTHERN SPIRIT	**PROJECT MANAGER**	**2000**	
ROMA METRO	**PROJECT MANAGER**	**2000**	
BUCAREST METRO	**PROJECT MANAGER**	**1999**	
BUENOS AIRES METRO	**PROJECT MANAGER**	**1999**	

Name	**ALEJANDRO URRIZA – Project Manager**		
Current Employer	**CONSTRUCCIONES Y AUXILIAR DE FERROCARRILES – CAF**		
Professional Qualifications	**BACHELOR SCIENCE IN INDUSTRIAL ENGINEERING**		
Availability			
Relevant Experience to the Tram Supply Agreement			
Project	**Role and Responsibility (including identity of employer)**	**From**	**To**
2900 DMU - IRISH RAIL	**DEPUTY PROJECT MANAGER**	**2002**	**2003**
INTERCITY - IRISH RAIL	**DEPUTY PROJECT MANAGER**	**2003**	**2005**
ÖBB – Vienna	**Export Department - Area Manager**	**2005**	**2006**
Tram Algiers - EMA	**Export Department - Area Manager**	**2005**	**2006**
RS2 – DMRC – New Delhi	**Export Department - Area Manager**	**2005**	**2006**
RS3 – DMRC – New Delhi	**Export Department - Area Manager**	**2006**	**2007**
Tram Edinburgh -Tie	**Export Department - Area Manager**	**2006**	**2007**
Metro Cairo - NAT	**Export Department - Area Manager**	**2006**	**2007**
Airport link – DMRC – New Delhi	**Export Department - Area Manager**	**2007**	**2007**

Name	**EDUARDO GÁLVEZ – Overall Technical Manager**		
Current Employer	**CONSTRUCCIONES Y AUXILIAR DE FERROCARRILES – CAF**		
Professional Qualifications	**INDUSTRIAL (ELECTRICAL) ENGINEER (M. Eng)**		
Availability			
Relevant Experience to the Tram Supply Agreement			
Project	**Role and Responsibility (including identity of employer)**	**From**	**To**
Barcelona Metro s.3000 y 4000. **Madrid Metro s.2000 y s.5000.**	**Project Electric Engineer**	**1982**	**1990**
Barcelona Metro s2000 **Monterrey Metro** **EMU s.112 (F.G.C.)**	**Engineering Project Manager**	**1990**	**1994**
EMU Class 332 (Heathrow Express)	**Principal Project Manager**	**1994**	**1996**
-	**Head of "Engineering Projects Area"**	**1996**	**2004**
CIVIA Train (RENFE)	**Principal Project Manager**	**2.000**	**2002**
-	**Head of Engineering and Technical Office.**	**2004**	**Present day**

Name	**F. JAVIER LUCIA – Vehicle Safety Manager**		
Current Employer	**CONSTRUCCIONES Y AUXILIAR DE FERROCARRILES – CAF**		
Professional Qualifications	**INDUSTRIAL (ELECTRICAL) ENGINEER (M. Eng)**		
Availability			
Relevant Experience to the Tram Supply Agreement			
Project	**Role and Responsibility (including identity of employer)**	**From**	**To**
EMU Class 332 (Heathrow Express)	**Systems Engineer & Deputy Safety Manager**	**1995**	**1997**
EMU Class 333 (Northern Spirit)	**Systems Engineer & Deputy Safety Manager**	**1998**	**1999**
DMU Class 3000 (NIR)	**Safety Manager**	**2002**	**2004**
-	**Head of Systems Area (Technical Office)**	**1998**	**2007**
-	**Head of Regulations / RAMS Area (Technical Office)**	**2007**	**Present day**

[redacted]

Director/Authorised Signatory
tie LIMITED

[redacted]

Director/Authorised Signatory
CONSTRUCCIONES Y AUXILIAR DE FERROCARRILES S.A. (CAF)

This is Schedule 7 referred to in the foregoing Tram Supply Agreement between tie Limited and Construcciones Y Auxiliar de Ferrocarriles S.A. (CAF)

SCHEDULE 7

NOT USED

This is Schedule 8 referred to in the foregoing Tram Supply Agreement between tie Limited and Construcciones Y Auxiliar de Ferrocarriles S.A. (CAF)

SCHEDULE 8

ESCROW AGREEMENT

Single Licensee
Software Escrow Agreement

Date	
Owner	[Ownername]
Agreement Number	[Agreement#]

Notice: The parties to this Agreement are obliged to inform NCC Escrow of any changes to the Package or in their circumstances (including change of name registered office, contact details or change of owner of the intellectual property in the Package)

Version 11.07

TIE00899939_1043

Escrow Agreement Dated

Between:

(1) [Ownername] whose registered office is at [Owneraddress] (CRN: [Ownercrn]) ("Owner")

(2) [Licenseename] whose registered office is at [Licenseeaddress] (CRN: [Licenseecrn]) ("Licensee") and

(3) NCC ESCROW INTERNATIONAL LIMITED a company registered in England whose registered office is at Manchester Technology Centre Oxford Road Manchester M1 7EF ENGLAND (CRN: 2081950) ("NCC Escrow")

Background

(A) The Licensee has been granted a licence to use the Package which comprises computer programs.

(B) Certain technical information and/or documentation relating to the software package is the confidential information and intellectual property of the Owner or a third party.

(C) The Owner acknowledges that in certain circumstances such information and/or documentation would be required by the Licensee in order for it to continue to exercise its rights under the Licence Agreement.

(D) The parties therefore agree that such information and/or documentation should be placed with a trusted third party NCC Escrow so that such information and/or documentation can be released to the Licensee should certain circumstances arise.

Agreement

In consideration of the mutual undertakings and obligations contained in this Agreement the parties agree that:

1 Definitions and Interpretation

1.1 In this Agreement the following terms shall have the following meanings:

"Agreement" means the terms and conditions of this escrow agreement set out below including the schedules hereto.

"Confidential Information" means all technical and/or commercial information not in the public domain and which is designated in writing as confidential by any party together with all other information of any party which may reasonably be regarded as confidential information.

"Full Verification" means the tests and processes forming NCC Escrow's Full Verification service and/or such other tests and processes as may be agreed between the parties for the verification of the Material.

"Independent Expert" means a suitably qualified and independent solicitor or barrister.

"Integrity Testing" means those tests and processes forming NCC Escrow's Integrity Testing service insofar as they can be applied to the Material.

"Intellectual Property Rights" means any copyright, patents, design patents, registered designs, design rights, utility models, trademarks, service marks, trade secrets, know how, database rights, moral rights, confidential information, trade or business names, domain names and any other rights of a similar nature including industrial and proprietary rights and other similar protected rights in any country or jurisdiction together with all registrations, applications to register and rights to apply for registration of any of the aforementioned rights and any licences of or in respect of such rights.

"Licence Agreement" means the agreement under which the Licensee was granted a licence to use the Package.

"Material" means the Source Code of the Package and such other material and documentation (including updates and upgrades thereto and new versions thereof, as are necessary to be delivered or deposited to comply with clause 2 of this Agreement.

"Order Form" means the order form setting out the details of the order placed with NCC Escrow for setting up this Agreement.

"Package" means the software package together with any updates and upgrades thereto and new versions thereof licensed to the Licensee under the Licence Agreement details of which are set out in schedule 1.

"Release Purposes" means the purposes of understanding, maintaining, modifying and correcting the Package exclusively for and on behalf of the Licensee together with such other purposes (if any) as are permitted under the Licence Agreement.

"Source Code" means the computer programming code of the Package in human readable form.

"Third Party Material" means Source Code which is not the confidential information and intellectual property of the Owner or the Licensee.

1.2 This Agreement shall be interpreted in accordance with the following:

1.2.1 headings are for ease of reference only and shall not be taken into consideration in the interpretation of this Agreement;

1.2.2 all references to clauses and schedules are references to clauses and schedules of this Agreement; and

1.2.3 all references to a party or parties are references to a party or parties to this Agreement.

2 **Owner's Duties and Warranties**

2.1 The Owner shall:

2.1.1 deliver a copy of the Material to NCC Escrow within 30 days of the date of this Agreement;

2.1.2 deliver a further copy of the Material to NCC Escrow each time that there is a change to the Package;

2.1.3 ensure that each copy of the Material deposited with NCC Escrow comprises the Source Code of the latest version of the Package used by the Licensee;

2.1.4 deliver to NCC Escrow a replacement copy of the Material within 30 days after the anniversary of the last delivery of the Material to ensure that the integrity of the Material media is maintained;

2.1.5 deliver a replacement copy of the Material to NCC Escrow within 14 days of a notice given to it by NCC Escrow under the provisions of clause 4.1.3;

2.1.6 deliver with each deposit of the Material the following information:

2.1.6.1 details of the deposit including the full name of the Package (i.e. the original name as set out under schedule 1 together with any new names given to the Package by the Owner), version details, media type, backup command/software used, compression used, archive hardware and operating system details; and

2.1.6.2 password/encryption details required to access the Material;

2.1.7 deliver with each deposit of the Material the following technical information (where applicable):

2.1.7.1 documentation describing the procedures for building, compiling and installing the software, including names and versions of the development tools;

2.1.7.2 software design information (e.g. module names and functionality); and

2.1.7.3 name and contact details of employees with knowledge of how to maintain and support the Material; and

2.1.8 if required by the Licensee, deposit a backup copy of the object code of any third party software package required to access, install, build or compile or otherwise use the Material.

2.2 The Owner warrants to both NCC Escrow and the Licensee at the time of each deposit of the Material with NCC Escrow that:

2.2.1 other than any third party object code referred to in clause 2.1.8 or any Third Party Material, it owns the Intellectual Property Rights in the Material;

2.2.2 in respect of any Third Party Material, it has been granted valid and ongoing rights under licence by the third party owner(s) thereof to deal with such Third Party Material in the manner anticipated under this Agreement and that the Owner has the express authority of such third party owner(s) to deposit the Third Party Material under this Agreement as evidenced by a signed letter of authorisation in the form required by NCC Escrow;

2.2.3 in entering into this Agreement and performing its obligations under it, it is not in breach of any of its ongoing express or implied obligations to any third party(s);

2.2.4 the Material deposited under clause 2.1 contains all information in human-readable form (except for any third party object code deposited pursuant to clause 2.1.8) and is on suitable media to enable a reasonably skilled programmer or analyst to understand, maintain, modify and correct the Package; and

2.2.5 in respect of any third party object code that the Owner, at its option, or, at the request of the Licensee, deposits with NCC Escrow in conjunction with the Material pursuant to clause 2.1.8, it has the full right and authority to do so.

3 **Licensee's Responsibilities and Undertakings**

3.1 The Licensee shall notify NCC Escrow of any change to the Package that necessitates a

replacement deposit of the Material.

3.2 In the event that the Material is released under clause 6, the Licensee shall:

3.2.1 keep the Material confidential at all times;

3.2.2 use the Material only for the Release Purposes;

3.2.3 not disclose the Material to any person save such of the Licensee's employees or contractors who need to know the same for the Release Purposes. In the event that Material is disclosed to its employees or contractors, the Licensee shall ensure that they are bound by the same confidentiality obligations as are contained in this clause 3.2;

3.2.4 hold all media containing the Material in a safe and secure environment when not in use; and

3.2.5 forthwith destroy the Material should the Licensee cease to be entitled to use the Package under the terms of the Licence Agreement.

3.3 In the event that the Material is released under clause 6, it shall be the responsibility of the Licensee to obtain the necessary licences to utilise the object code of any third party material deposited by the Owner pursuant to clause 2.1.8.

4 NCC Escrow's Duties

4.1 NCC Escrow shall:

4.1.1 at all times during the term of this Agreement retain the latest deposit of the Material in a safe and secure environment;

4.1.2 inform the Owner and the Licensee of the receipt of any deposit of the Material by sending to both parties a copy of the Integrity Testing report or Full Verification report (as the case may be) generated from the testing processes carried out under clause 10; and

4.1.3 notify the Owner and the Licensee if it becomes aware at any time during the term of this Agreement that the copy of the Material held by it has been lost, damaged or destroyed so that a replacement may be obtained.

4.2 In the event of failure by the Owner to deposit any Material with NCC Escrow, NCC Escrow shall not be responsible for procuring such deposit and may, at its sole discretion, notify the Licensee of the Owner's failure to deposit any Material.

4.3 NCC Escrow may appoint agents, contractors or sub-contractors as it deems fit to carry out the Integrity Testing and the Full Verification processes. NCC Escrow shall ensure that any such agents, contractors and sub-contractors are bound by the same confidentiality obligations as are contained in clause 8.

4.4 NCC Escrow has the right to make such copies of the Material as may be necessary solely for the purposes of this Agreement.

5 Payment

5.1 The parties shall pay NCC Escrow's standard fees and charges as published from time to time or as otherwise agreed, in the proportions set out in Schedule 2. NCC Escrow's fees as published are exclusive of value added tax.

5.2 NCC Escrow shall be entitled to review and vary its standard fees and charges for its services under this Agreement from time to time but no more than once a year and only upon 45 days written notice to the parties.

5.3 All invoices are payable within 30 days from the date of invoice. NCC Escrow reserves the right to charge interest in respect of the late payment of any sum due under this Agreement (both before and after judgement) at the rate of 2% per annum over the prevailing base rate of HSBC Bank Plc accruing on a daily basis from the due date thereof until full payment.

6 Release Events

6.1 Subject to: (i) the remaining provisions of this clause 6; and (ii) the receipt by NCC Escrow of its release fee and any other fees and interest (if any) outstanding under this Agreement, NCC Escrow will release the Material to a duly authorised officer of the Licensee if any of the following events ("**Release Event(s)**") occur:

6.1.1 if the Owner is a company:

6.1.1.1 an order is made for the winding up of the Owner, the Owner passes a resolution for winding up (other than for the purposes of a solvent reconstruction or amalgamation), or a liquidator of the Owner is appointed; or

6.1.1.2 an order is made for the appointment of an administrator of the Owner or an administrator of the Owner is appointed; or

6.1.1.3 the Owner enters into a compromise or arrangement with creditors; or

6.1.1.4 the Owner has a receiver, administrative receiver or manager appointed over all or any part of its assets or undertaking; or

6.1.1.5 the Owner is dissolved; or

6.1.2 if the Owner is an individual:

6.1.2.1 the Owner enters into a compromise or arrangement with creditors; or

6.1.2.2 the Owner is declared bankrupt; or

6.1.2.3 the Owner dies; or

6.1.3 if the Owner is a partnership:

6.1.3.1 any of the partners in the Owner are declared bankrupt or enter into a compromise or arrangement with creditors; or

6.1.3.2 the Owner is wound up or dissolved; or

6.1.3.3 the Owner enters into a compromise or arrangement with creditors; or

6.1.3.4 a partnership administration order is made in respect of the Owner; or

6.1.4 any similar or analogous proceedings or events to those in clauses 6.1.1 to 6.1.3 above occurs in respect of the Owner within any jurisdiction outside England; or

6.1.5 the Owner decides to carry on its business or the part of its business which relates to the Package; or

6.1.6 the Owner assigns its rights to the Intellectual Property Rights in the Material to a third party ("**Assignee**") and the Assignee fails, within 60 days of all parties' knowledge of such assignment, to continue escrow protection for the benefit of the Licensee by failing to enter into either:

6.1.6.1 a novation agreement with the Licensee and NCC Escrow for the assumption of the Owner's rights and obligations under this Agreement by the Assignee; or

6.1.6.2 a new escrow agreement with the Licensee for the Package which offers the Licensee substantially similar protection to that provided by this Agreement without significantly increasing the overall cost to the Licensee

provided that if the Assignee offers to enter into a novation or new escrow agreement within 60 days of all parties' knowledge of the assignment and the Licensee fails to accept the Assignee's offer within 30 days of such offer being notified to the Licensee, there shall be no Release Event under this clause; or

6.1.7 the Owner or, where relevant, its agent, parent, subsidiary or associated company is in material breach of its obligations as to maintenance or modification of the Package under the Licence Agreement or any maintenance agreement entered into in connection with the Package and has failed to remedy such default notified by the Licensee to the Owner within a reasonable period.

6.2 The Licensee must notify NCC Escrow of the Release Event specified in clause 6.1 by delivering to NCC Escrow a statutory or notarised declaration ("**Declaration**") made by an officer of the Licensee declaring that such Release Event has occurred, setting out the facts and circumstances of the Release Event, that the Licence Agreement and any maintenance agreement, if relevant, for the Package was still valid and effective up to the occurrence of such Release Event and exhibiting such documentary evidence in support of the Declaration as NCC Escrow shall reasonably require.

6.3 Upon receipt of a Declaration from the Licensee claiming that a Release Event has occurred:

6.3.1 NCC Escrow shall submit a copy of the Declaration to the Owner by courier or other form of guaranteed delivery; and

6.3.2 unless within 14 days after the date of despatch of the Declaration by NCC Escrow, NCC Escrow receives a counter-notice signed by a duly authorised officer of the Owner stating that in their views no such Release Event has occurred or, if appropriate, that the event or circumstances giving rise to the Release Event has been rectified, as shown by documentation in support thereof,

NCC Escrow will release the Material to the Licensee for its use for the Release Purposes.

6.4 Upon receipt of the counter-notice from the Owner under clause 6.3.2, NCC Escrow shall send a copy of the counter-notice and any supporting evidence to the Licensee by courier or other form of guaranteed delivery.

6.5 Upon receipt by the Licensee of the counter-notice from NCC Escrow, or in any event, within 90 days of despatch of the counter-notice by NCC Escrow, the Licensee may give notice to NCC

Escrow that they wish to invoke the dispute resolution procedure under clause 7.

6.6 If within 90 days of despatch of the counterpart by NCC Escrow to the Licensee, NCC Escrow has not been informed by the Licensee that they wish the dispute resolution procedure under clause 7 to apply, the Declaration submitted by the Licensee will be deemed to be no longer valid and the Licensee shall be deemed to have waived their right to release of the Material for the particular reason or event specified in the original Declaration.

6.7 For the avoidance of doubt, where a Release Event has occurred under clauses 6.1.1 to 6.1.5, a subsequent assignment of the Intellectual Property Rights in the Material shall not prejudice the Licensee's right to release of the Material and its use for the Release Purposes.

7 Disputes

7.1 NCC Escrow shall notify the Owner of the Licensee's request for dispute resolution. Unless the Owner or the Licensee objects, NCC Escrow's Chief Executive Officer for the time being will appoint an independent Expert to resolve the dispute. If the Owner or the Licensee objects to this appointment, they shall endeavour to appoint a mutually acceptable independent Expert within 7 days of registering their objection. If they fail to appoint an independent Expert within this 7 day period, NCC Escrow shall request that the President of the Law Society appoints an independent Expert to resolve the dispute. Any appointment of an independent Expert under this clause shall be binding upon the parties.

7.2 Within 5 working days of the appointment of the independent Expert, the Owner and the Licensee shall each provide full written submissions to the independent Expert together with all relevant documentary evidence in their possession in support of their claim.

7.3 The independent Expert shall be requested to give a decision on the matter within 14 days of the date of referral or as soon as practicable thereafter and to send a copy of that decision to the Owner, Licensee and NCC Escrow. The independent Expert's decision shall be final and binding on all parties and shall not be subject to appeal to a court in legal proceedings except in the case of manifest error.

7.4 If the independent Expert's decision is in favour of the Licensee, NCC Escrow is hereby authorised to release and deliver the Material to the Licensee within 5 working days of the decision being notified by the Independent Expert to the parties.

7.5 The parties hereby agree that the costs and expenses of the Independent Expert shall be borne by the party against whom the decision of the Independent Expert is given.

8 Confidentiality

8.1 The Material shall remain at all times the confidential and intellectual property of its Owner.

8.2 In the event that NCC Escrow releases the Material to the Licensee, the Licensee shall be permitted to use the Material only for the Release Purposes.

8.3 NCC Escrow agrees to keep all Confidential Information relating to the Material and/or the Package that comes into its possession or to its knowledge under this Agreement in strictest confidence and secrecy. NCC Escrow further agrees not to make use of such information and/or documentation other than for the purposes of this Agreement and, unless the parties should agree otherwise in writing, will not disclose or release it other than in accordance with the terms of this Agreement.

9 Intellectual Property Rights

9.1 The release of the Material to the Licensee will not act as an assignment of any Intellectual Property Rights that the Owner or any third party possesses in the Material.

9.2 The Intellectual Property Rights in the Integrity Testing report and any Full Verification report shall remain vested in NCC Escrow. The Owner and the Licensee shall each be granted a non-exclusive right and licence to use such report for the purposes of this Agreement and their own internal purposes only.

10 Integrity Testing and Full Verification

10.1 NCC Escrow shall bear no obligation or responsibility to any party to this Agreement or person, firm, company or entity whatsoever to determine the existence, relevance, completeness, accuracy, operation, effectiveness, functionality or any other aspect of the Material received by NCC Escrow under this Agreement.

10.2 As soon as practicable after the Material has been deposited with NCC Escrow, NCC Escrow shall apply its Integrity Testing processes to the Material.

10.3 Any party to this Agreement shall be entitled to require NCC Escrow to carry out a Full Verification. Subject to clause 10.4, NCC Escrow's prevailing fees and charges for the Full Verification processes and all reasonable expenses incurred by NCC Escrow in carrying out the Full Verification processes shall be payable by the requesting party.

10.4 If the Material fails to satisfy NCC Escrow's Full Verification tests as a result of being defective or incomplete in content, NCC Escrow's fees, charges and expenses in relation to the Full Verification tests shall be paid by the Owner.

10.5 Should the Material deposited fail to satisfy NCC Escrow's Integrity Testing or Full Verification tests under clauses 10.2 or 10.3, the Owner shall, within 14 days of the receipt of the notice of test failure from NCC Escrow, deposit such new, corrected or revised Material as shall be necessary to ensure its compliance with its warranties and obligations in clause 9. If the Owner fails to make such deposit of the new, corrected or revised Material, NCC Escrow will issue a report to the Licensee detailing the problem with the Material as revealed by the relevant test.

11 NCC Escrow's Liability

11.1 Nothing in this clause 11 excludes or limits the liability of NCC Escrow for fraudulent misrepresentation or for death or personal injury caused by NCC Escrow's negligence. Save as aforesaid the following provisions set out the entire financial liability of NCC Escrow (including any liability for the acts or omissions of its employees, agents and sub-contractors) to the other parties:

11.1.1 NCC Escrow shall not be liable for any loss or damage caused to either the Owner or the Licensee either jointly or severally except to the extent that such loss or damage is caused by the negligent acts or omissions of or a breach of any contractual duty by NCC Escrow, its employees, agents or sub-contractors and in such event NCC Escrow's total liability in respect of all claims arising under or by virtue of this Agreement or in connection with the performance or contemplated performance of this Agreement shall not exceed the sum of £1,500,000 (one million, five hundred thousand UK pounds); and

11.1.2 NCC Escrow shall not be liable to the Owner or the Licensee for any indirect or consequential loss or damage, whether for loss of profit, loss of business, depletion of goodwill or otherwise howsoever or howsoever caused which arise out of or in connection with this Agreement even if such loss was reasonably foreseeable or NCC Escrow had been advised of the possibility of incurring the same by the Owner, the Licensee or any third party.

11.2 NCC Escrow shall not be liable in any way to the Owner or the Licensee for acting in accordance with the terms of this Agreement and specifically, without limitation, for acting upon any notice, written request, waiver, consent, receipt, statutory declaration or any other document furnished to it pursuant to and in accordance with this Agreement.

11.3 NCC Escrow shall not be required to make any investigation into and shall be entitled in good faith without incurring any liability to the Owner or the Licensee to assume (without requesting evidence thereof) the validity, authenticity, veracity and due and authorised execution of any documents, written requests, waivers, consents, receipts, statutory declarations or notices received by it in respect of this Agreement.

12 Indemnity

12.1 Save for any claim falling within the provisions of clause 11.1.1, the Owner and the Licensee jointly and severally agree at all times to indemnify and hold harmless NCC Escrow in respect of all of its legal and all other costs, fees and expenses incurred directly or indirectly as a result of being brought into or otherwise becoming involved in any form of dispute resolution proceedings or any litigation of any kind between the Owner and the Licensee in relation to this Agreement to the extent that this Agreement does not otherwise provide for reimbursement of such costs.

12.2 The Owner shall assume all liability and shall at all times indemnify and hold harmless NCC Escrow and its officers, agents, sub-contractors and employees from and against any and all liability, loss, damages, costs, legal costs, professional and other expenses and any other liabilities of whatsoever nature, awarded against or agreed to be paid or otherwise suffered, incurred or sustained by NCC Escrow, whether direct, indirect or consequential as a result of or in connection with any claim by any third party(s) for alleged or actual infringement of Intellectual Property Rights arising out of or in connection with all and any acts or omissions of NCC Escrow in respect of the Material as contemplated under this Agreement.

13 Term and Termination

13.1 This Agreement shall continue until terminated in accordance with this clause 13.

13.2 If the Owner or the Licensee, as the case may be, fails to pay an invoice addressed to it for services under this Agreement within 30 days of its issue, NCC Escrow reserves the right to give that party written notice to pay the outstanding invoice within 30 days. If the Licensee has not paid its invoice by the expiry of the 30 day notice period, this Agreement will automatically immediately terminate. If the Owner has not paid its invoice by the expiry of the 30 day notice period, NCC Escrow will give the Licensee a period of 15 days to pay the Owner's invoice. If the Owner's invoice has not been paid by the expiry of the 15 day optional payment period given to the Licensee, this Agreement will automatically immediately terminate. Any amounts owed by the Owner but paid by the Licensee will be recoverable by the Licensee direct from the Owner as a debt and, if requested, NCC Escrow shall provide appropriate documentation to assist in such

recovery

13.3 Upon termination under the provisions of clause 13.2, for 30 days from the date of termination NCC Escrow will make the Material available for collection by the Owner or its agents from the premises of NCC Escrow during office hours. After such 30 day period NCC Escrow will destroy the Material.

13.4 Notwithstanding any other provision of this clause 13, NCC Escrow may terminate this Agreement by giving 30 days written notice to the Owner and the Licensee. In that event, the Owner and the Licensee shall appoint a mutually acceptable new custodian on similar terms and conditions to those contained herein. If a new custodian is not appointed within 14 days of delivery of such notice, the Owner or the Licensee shall be entitled to request the President for the time being of the British Computer Society (or successor body) to appoint a suitable new custodian upon such terms and conditions as he/she shall require. Such appointment shall be final and binding on the Owner and the Licensee. If NCC Escrow is notified of the new custodian within the notice period, NCC Escrow will forthwith deliver the Material to the new custodian. If NCC Escrow is not notified of the new custodian within the notice period, NCC Escrow will return the Material to the Owner.

13.5 The Licensee may terminate this Agreement at any time by giving written notice to NCC Escrow. Upon such termination, NCC Escrow will return the Material to the Owner.

13.6 If NCC Escrow discovers that a Release Event has occurred and the Licensee has failed to exercise its right to claim for release of the Material under clause 6.2, NCC Escrow shall have the right to terminate this Agreement upon 30 days written notice to the Owner and the Licensee. The Licensee shall have the option of applying for release in accordance with clause 6 during this notice period, but if it fails to do so, upon the expiry of this notice period, this Agreement shall automatically terminate and, unless otherwise instructed by the Owner or the Assignee prior to expiry of the notice period, NCC Escrow shall destroy the Material.

13.7 If the Intellectual Property Rights in the Material have been assigned to a third party and the proviso in clause 6.1.6 applies such that there has been no Release Event under that clause, NCC Escrow shall be entitled to terminate this Agreement immediately by written notice to the Owner and the Licensee and upon such termination, unless otherwise instructed by the Owner or the Assignee, NCC Escrow shall destroy the Material.

13.8 If the Licence Agreement has expired or has been lawfully terminated, then the Licensee shall give notice to NCC Escrow within 14 days thereof to terminate this Agreement, failing which, the Owner shall be entitled to give written notice to NCC Escrow to terminate this Agreement. Upon receipt of such a notice from the Owner, NCC Escrow shall notify the Licensee of the Owner's notice to terminate. Unless within 14 days of NCC Escrow giving such notice to the Licensee, NCC Escrow receives a counter-notice signed by a duly authorised officer of the Licensee disputing the termination of the Licence Agreement, then the Licensee shall be deemed to have consented to such termination and this Agreement shall immediately automatically terminate. Any disputes arising under this clause shall be dealt with in accordance with the dispute resolution procedure in clause 7. Upon termination under this clause, NCC Escrow shall return the Material to the Owner.

13.9 Subject to clause 13.8, the Owner may only terminate this Agreement with the written consent of the Licensee.

13.10 This Agreement shall automatically immediately terminate upon release of the Material to the Licensee in accordance with clause 6.

13.11 If this Agreement is superseded and replaced by a new agreement in respect of the Material, this Agreement shall, upon the coming into force of the new agreement, automatically terminate. The relevant party or parties shall request NCC Escrow to either transfer the Material to the new agreement or ask the owner under the new agreement to deposit new material. If new material is deposited, upon its receipt, NCC Escrow shall, unless otherwise instructed, destroy the Material.

13.12 The provisions of clauses 1, 3.2, 3.3, 5, 8, 9, 10.1, 11, 12, 13.12 to 13.14 (inclusive) and 14 shall continue in full force after termination of this Agreement.

13.13 On and after termination of this Agreement, the Owner and/or the Licensee (as appropriate) shall remain liable to NCC Escrow for payment in full of any fees and interest which have become due but which have not been paid as at the date of termination.

13.14 The termination of this Agreement, however arising, shall be without prejudice to the rights accrued to the parties prior to termination.

14 General

14.1 A party shall notify the other parties to this Agreement, within 30 days of its occurrence, of any of the following:

14.1.1 a change of its name, registered office, contact address or other contact details; and

14.1.2 any material change in its circumstances that may affect the validity or operation of this Agreement.

14.2 Within 14 days of any assignment or transfer by the Owner of any part of its Intellectual Property Rights in the Material, the Owner shall notify

14.2.1 NCC Escrow and the Licensee of such assignment and the identity of the Assignee; and

14.2.2 the Assignee of the provisions of clause 6.1.6.

14.3 The formation, existence, construction, performance, validity and all other aspects of this Agreement shall be governed by and construed in accordance with the laws of England and the parties submit to the exclusive jurisdiction of the English courts.

14.4 This Agreement, together with the Order Form and any relevant NCC Escrow standard terms and conditions represent the whole agreement relating to the escrow arrangements between NCC Escrow and the other parties for the Package and shall supersede all prior agreements, discussions, arrangements, representations, negotiations and undertakings. In the event of any conflict between any of these documents, the terms of this Agreement shall prevail.

14.5 Unless the provisions of this Agreement otherwise provide, any notice or other communication required or permitted to be given or made in writing hereunder shall be validly given or made if delivered by hand or courier or if despatched by first class recorded delivery (airmail if overseas) addressed to the address specified for the parties in this Agreement (or such other address as may be notified to the parties from time to time) or if sent by facsimile message to such facsimile number as has been notified to the parties from time to time and shall be deemed to have been received:

(i) if delivered by hand or courier, at the time of delivery;

(ii) if sent by first class recorded delivery (airmail if overseas), 2 business days after posting (6 days if sent by airmail);

(iii) if sent by facsimile, at the time of completion of the transmission of the facsimile with facsimile machine confirmation of transmission to the correct facsimile number of all pages of the notice.

14.6 The Owner and the Licensee shall not assign, transfer or subcontract this Agreement or any rights or obligations thereunder without the prior written consent of the other parties.

14.7 NCC Escrow shall be entitled to transfer or assign this Agreement upon written notice to both the Owner and the Licensee.

14.8 This Agreement shall be binding upon and survive for the benefit of the successors in title and permitted assigns of the parties.

14.9 If any provision of this Agreement is declared too broad in any respect to permit enforcement to its full extent, the parties agree that such provision shall be enforced to the maximum extent permitted by law and that such provision shall be deemed to be varied accordingly. If any provision of this Agreement is found by any court, tribunal or administrative body of competent jurisdiction to be wholly or partly illegal, invalid, void or unenforceable, it shall, to the extent of such illegality, invalidity or unenforceability, be deemed severable and the remaining part of the provision and the rest of the provisions of this Agreement shall continue in full force and effect.

14.10 Save as expressly provided in this Agreement, no amendment or variation of this Agreement shall be effective unless in writing and signed by a duly authorised representative of each of the parties hereto.

14.11 The parties shall not be liable to each other or be deemed to be in breach of this Agreement by reason of any delay in performing, or failure to perform, any of their obligations under this Agreement if the delay or failure was for a reason beyond that party's reasonable control (including, without limitation, fire, flood, explosion, epidemic, riot, civil commotion, any strike, lockout or other industrial action, act of God, war or warlike hostilities or threat of war, terrorist activities, acts permit or malicious damage, or any prohibition or restriction by any governments or other legal authority which affects this Agreement and which is not in force on the date of this Agreement). A party claiming to be unable to perform its obligations under this Agreement (either on time or at all) in any of the circumstances set out above must notify the other parties of the nature and extent of the circumstances in question as soon as practicable. If such circumstances continue for more than six months, any of the other parties shall be entitled to terminate this Agreement by giving one month's notice in writing.

14.12 No waiver by any party of any breach of any provisions of this Agreement shall be deemed to be a waiver of any subsequent or other breach and, subject to clause 6.6, no failure to exercise or delay in exercising any right or remedy under this Agreement shall constitute a waiver thereof.

14.13 This Agreement is not intended to create any right under the Contracts (Rights of Third Parties) Act 1999 which is enforceable by any person who is not a party to this Agreement and the rights of any third party under the said act are hereby expressly excluded.

14.14 This Agreement may be executed in any number of counterparts and by different parties in separate counterparts. Each counterpart when so executed shall be deemed to be an original and all of which together shall constitute one and the same agreement.

Signed for and on behalf of [Ownername]

Name: ..... | .....

Position: ..... | (Authorised Signatory)

Signed for and on behalf of [Licenseename]

Name: ..... | .....

Position: ..... | (Authorised Signatory)

Signed for and on behalf of NCC ESCROW INTERNATIONAL LIMITED

Name: ..... | .....

Position: ..... | (Authorised Signatory)

Schedule 1

The Package

The [illegible] package known as [illegible] or any other name as may be given to it by the Licensee from time to time

Schedule 2

NCC Escrow's Fees

	DESCRIPTION	OWNER	LICENSEE
1	Annual Fee (payable on completion of this Agreement and thereafter on anniversary thereof)	[illegible]	[illegible]
2	Unchecked Deposit Fee (if the Deposit is not checked per deposit, if any, payable on completion of this Agreement and thereafter on anniversary thereof)	[illegible]	[illegible]
3	Unchecked Deposit Fee per unchecked deposit	[illegible]	[illegible]
4	Release Fee (plus NCC Escrow's reasonable expenses)	[illegible]	[illegible]

Additional fees will be payable to NCC Escrow by the Licensee under other terms agreed between the parties from time to time where applicable

- Storage Fee for deposits held with NCC Escrow
- Any variation or replacement of this Agreement at the request of the Owner or the Licensee
- Integrity Testing Fee for deposits containing software for [illegible]

Version 11/07 11

[redacted]

Director/Authorised Signatory
tie LIMITED

[redacted]

Director/Authorised Signatory
CONSTRUCCIONES Y AUXILIAR DE FERROCARRILES S.A. (CAF)

This is Schedule 9 referred to in the foregoing Tram Supply Agreement between tie Limited and Construcciones Y Auxiliar de Ferrocarriles S.A. (CAF)

SCHEDULE 9

REVIEW PROCEDURE

PART A

1. INTRODUCTION

1.1 Except where otherwise agreed in writing, the provisions of this Schedule 9 (*Review Procedure*) shall apply whenever any Deliverable or course of action is required to be reviewed, approved, agreed, consented to or otherwise processed in accordance with the Agreement.

1.2 Each submission by the Tram Supplier to the Client's Representative under the Review Procedure shall be accompanied by three hard copies and a soft copy (in agreed appropriate format) of the proposed Deliverable (in appropriate agreed format) to be reviewed or a statement of the proposed course of action (the entire contents of a submission being referred to as a "Submitted Item"). In relation to each Submitted Item, the provisions of this Schedule 9 (*Review Procedure*) shall apply.

2. METHOD STATEMENTS

2.1 Method statements shall be reviewed using the procedure set out in the Client "Method Statement Review Policy" (as updated from time to time by **tie**). The current version of the "Method Statement Review Policy" is rev 0.1 and is included as Part B of this Schedule.

2.2 The Tram Supplier shall submit a method statement and risk assessment for a package of work not less than 10 working days (or such other period as the Parties may agree in writing) before the work in question is due to be commenced.

2.3 No works shall commence until a method statement has been written, accepted in accordance with the Client "Method Statement Review Policy" and briefed to all related staff, for the works concerned.

2.4 Where a method statement is submitted to the Client for acceptance, within 8 Business Days of the date of receipt of a submission (or re-submission, as the case may be) of the method statement to the Client's Representative (or such other period as the Parties may agree), the Client's Representative shall return one copy of the method statement to the Tram Supplier endorsed (subject to and in accordance with paragraph 3 (Grounds of Objection)) "Level A - no objection", "Level B - proceed subject to comments" or "Level C - resubmit".

TIE00899939_1054

2.5 If the Client's Representative fails to return a copy of any method statement within 8 Business Days (or within such other period as the Parties may agree in writing) of the date of its submission to the Client's Representative, then the Tram Supplier shall re-submit the method statement stating that it is a re-submitted item. If the Client's Representative fails to return a copy of any method statement within 5 Business Days of any re-submission, then the Tram Supplier may, at its discretion refer the matter for determination in accordance with the Dispute Resolution Procedure.

2.6 If the Client's Representative makes an objection to any method statement in accordance with paragraph 3 (Grounds of Objection), the Client's Representative shall state the ground upon which such objection is based and the evidence or other information necessary to substantiate that ground.

2.7 For the avoidance of doubt, the Client's Representative shall be entitled to make such comments on any method statement on any grounds as he sees fit but, to the extent that the Client's Representative comments on a method statement other than on the grounds specified in paragraph 5 (Grounds of Objection), or fails to comply with the provisions of this paragraph 2, the Tram Supplier may, at its discretion request written clarification of the basis for such comments and, if clarification is not received within 10 Business Days of such request by the Tram Supplier refer the matter for determination in accordance with the Dispute Resolution Procedure.

2.8 Where any information that has been provided is updated, the new issues shall be provided promptly to the Client as soon as reasonably possible.

2.9 The Tram Supplier shall ensure that each method statement shall contain sufficient detail and shall be accompanied by sufficient information to enable the Client's Representative to assess the method statement in accordance with this Schedule 9 (Review Procedure).

2.10 Where a revised method statement is submitted, the Tram Supplier shall also ensure that such revision clearly identifies what revision to the method statement was made.

3. DESIGN DELIVERABLES

3.1 Design Deliverables shall be reviewed using the procedure set out in the Design Management Plan (as updated from time to time by the Client). The current version of the Design Management Plan is version 5.3 and is included as Part C of this Schedule.

3.2 Within 20 Business Days of the date of receipt of a submission (or re-submission, as the case may be) of the Submitted Item to the Client's Representative (or such other period as the

TIE00899939_1055

Parties may agree), the Client's Representative shall return one copy of the relevant Submitted Item to the Tram Supplier endorsed (subject to and in accordance with paragraph 5 (Grounds of Objection)) "Level A - no objection", "Level B - proceed subject to comments" or "Level C - resubmit".

3.3 If the Client's Representative fails to return a copy of any Submitted Item within 20 Business Days (or within such other period as the Parties may agree in writing) of the date of its submission to the Client's Representative, then the Tram Supplier shall notify the Client that the submitted items have not been returned. If the Client's Representative fails to return a copy of any Submitted Item within 5 Business Days of any such notification, then the Client's Representative shall be deemed to have returned the Submitted Item to the Tram Supplier endorsed "Level A - no objection".

3.4 If the Client's Representative makes an objection to any Submitted Item in accordance with paragraph 5 (Grounds of Objection), the Client's Representative shall state the ground upon which such objection is based and the evidence or other information necessary to substantiate that ground.

3.5 For the avoidance of doubt, the Client's Representative shall be entitled to make such comments on any Submitted Item on any grounds as he sees fit but, to the extent that the Client's Representative comments on a Submitted Item other than on the grounds specified in paragraph 3 (Grounds of Objection), or fails to comply with the provisions of this paragraph 3, the Tram Supplier may, at its discretion request written clarification of the basis for such comments and, if clarification is not received within 10 Business Days of such request by the Tram Supplier refer the matter for determination in accordance with the Dispute Resolution Procedure.

3.6 Where any information that has been provided is updated, the new issues shall be provided promptly to the Client as soon as reasonably possible.

3.7 the Client's Representative shall be entitled to instruct the Tram Supplier that a defined class of Deliverable or course of action may be submitted "for information" and not for review in accordance with this Schedule 9 (Review Procedure).

3.8 The Tram Supplier shall ensure that each Submitted Item shall contain sufficient detail and shall be accompanied by sufficient information to enable the Client's Representative to assess the Submitted Item in accordance with this Schedule 9 (Review Procedure).

TIE00899939_1056

3.9 Where a revised Submitted Item is submitted, the Tram Supplier shall also ensure that such revision clearly identifies what revision to the Deliverable was made.

4. FURTHER INFORMATION

4.1 The Tram Supplier shall submit any further or other information, drawings, data and documents (including details of calculations) that the Client's Representative reasonably requires to act in accordance with this Schedule 9 (*Review Procedure*). If the Tram Supplier does not submit any such information, data and documents, the Client's Representative shall be entitled to object to the Submitted Item:

4.1.1 on the basis of the information, data and documents which have been provided; or

4.1.2 on the grounds that insufficient information, data and documents have been provided to enable the Client's Representative to act in accordance with this Schedule 9 (*Review Procedure*).

5. GROUNDS OF OBJECTION

5.1 the Client's Representative may object to any Submitted Item on the grounds set out in paragraph 4 (*Further Information*) above but otherwise may make objections in relation to a Submitted Item if, on the balance of probabilities, implementation of that Submitted Item:

5.1.1 would not be in accordance with this Agreement; and/or

5.1.2 would result in an increase to the Client's liabilities or potential or contingent liabilities under this Agreement; and/or

5.1.3 would be inefficient as to expenditure of resource/costs; and/or

5.1.4 would lead to a health and safety risk to any person or property; and/or

5.1.5 would lead to a breach of any Law or the terms of any Consent or Land Consent (as defined in the Infraco Contract); and/or

5.1.6 would necessitate the obtaining of a new Law or the obtaining of a variation to an existing Law; and/or

5.1.7 would not be in accordance with any relevant environmental requirements; and/or

5.1.8 would not be in accordance with the Employer's Requirements; and/or

TIE00899939_1057

5.1.9 would adversely impact on the flexibility or ease of operation, run time, reliability, operating maintenance costs of revenues of the Edinburgh Tram Network; and/or

5.1.10 would materially adversely affect the Tram Supplier's ability to perform its obligations under this Agreement; and/or

5.1.11 would materially adversely affect the Client's ability to perform its obligations or enforce its rights under this Agreement; and/or

5.1.12 is not in accordance with the Tram Supplier's quality plans; and/or

5.1.13 would not be in accordance with Good Industry Practice; and/or

5.1.14 would prevent efficient construction, completion and/or commissioning of the Edinburgh Tram Network or under the Tram Supply Agreement; and/or

5.1.15 would prevent a Certificate of Service Commencement being achieved by any of the Planned Service Commencement Dates.

6. EFFECT OF REVIEW

6.1 Any Submitted Item which is returned or deemed pursuant to paragraph 3.3 to have been returned by the Client's Representative endorsed "Level A - no objection" shall be complied with and implemented by the Tram Supplier.

6.2 If the Client's Representative returns the Submitted Item endorsed other than "Level A - no objection", the Tram Supplier shall:

6.2.1 where the Client's Representative has endorsed the Submitted Item "Level B - proceed subject to comments", proceed with the performance of the Tram Supplier Works in accordance with the Programme but acknowledge and take into account the Client's Representative's comments;

6.2.2 where the Client's Representative has endorsed the Submitted Item "Level C - resubmit", not act upon the Submitted Item, amend the Submitted Item to respond to the Client's Representative's objections and requirements, and re-submit the same to the Client's Representative in accordance with paragraph 6.3 unless the Tram Supplier disputes that any such objection or proposed requirement is on grounds permitted by this Agreement, in which case the Tram Supplier or the Client's Representative may refer the matter for determination in accordance with the Dispute Resolution Procedure and the Tram Supplier shall not act on the Submitted Item until such matter

TIE00899939_1058

is so determined or otherwise agreed provided that any referral to the Dispute Resolution Procedure is at the risk of the Tram Supplier.

6.3 Where the Submitted Item has been endorsed "Level C", the Tram Supplier shall within 10 Business Days of receiving the returned Submitted Item, resubmit the Submitted Item as amended to the Client's Representative and the provisions of paragraphs 1.2 to 6 of this Schedule 9 *(Review Procedure)* shall apply (mutatis mutandis) to such re-submission.

6.4 The return or deemed return of any Submitted Item endorsed "Level A - no objection" or otherwise endorsed in accordance with paragraph 6.2.1 ("Level B - proceed subject to comments") shall mean that the relevant Submitted Item may be used or implemented (subject to any comments made in accordance with paragraph 6.2.1) for the purposes for which it is intended. However, the return or deemed return of any Submitted Item howsoever endorsed shall not:

6.4.1 relieve the Tram Supplier of its obligations under this Agreement; nor

6.4.2 constitute an acknowledgement, admission or acceptance by the Client that the Tram Supplier has complied with such obligations.

7. DISCLAIMER

7.1 No review, objection, comment or silence by the Client shall operate to (i) exclude or limit the Tram Supplier's obligations or liabilities under this Agreement (or the Client's rights under this Agreement) or (ii) fix the Client with any express or implied obligations, duties or liabilities with respect to the Submitted Item.

7.2 For the avoidance of doubt, this information is supplementary to information required to be produced by the Tram Supplier in order to satisfy the approval requirements of and Consents from other third parties and Approval Bodies. These include those required for:

7.2.1 CEC in its capacity as planning authority

7.2.2 CEC in its capacity as roads authority;

7.2.3 HMRI;

7.2.4 Network Rail;

7.2.5 the Utilities;

7.2.6 Transport Scotland;

TIE00899939_1059

7.2.7 Historic Scotland;

7.2.8 SEPA; and

7.2.9 SNH.

7.3 The Tram Supplier shall promptly provide copies of all such submissions to the Client together with the responses to them as a matter of routine.

8. DOCUMENTATION FORMAT AND MANAGEMENT

8.1 The Tram Supplier shall issue three hard copies and a soft copy (in appropriate agreed format) of all Submitted Items to the Client and compile and maintain a register of the date and contents of the submission for each Submitted Item.

8.2 The Tram Supplier shall compile and maintain a register of the date of receipt and content of all Submitted Items that are returned or deemed to be returned by the Client's Representative.

8.3 All drawings shall be presented as A3 sized paper copies and drawings shall be prepared at their original size in a manner that allows them to be readily legible when reduced to A3 size. Original drawings shall not be greater than A0 in size.

9. VARIATIONS

9.1 No review, objection or comment or any failure to make objection or comment under this Schedule 9 (*Review Procedure*) by the Client shall constitute a Client Change

9.2 If, having received comments from the Client's Representative, the Tram Supplier considers that compliance with those comments would amount to a Client Change, the Tram Supplier shall within 5 Business Days of any comments being received, before complying with the comments, notify the Client of the same and, if it is agreed by the Parties or determined pursuant to the Dispute Resolution Procedure that a Client Change would arise if the comments were complied with, the Client may proceed with the matter in accordance with Clause 20 (*Changes*)

9.3 Any failure by the Tram Supplier to notify the Client within 5 Business Days (or such other period of time as agreed by the Client acting reasonably) of comments being received that it considers compliance with such comments of the Client's Representative would amount to a Client Change shall constitute an irrevocable acceptance by the Tram Supplier that any compliance with the Client's comments shall be without cost to the Client and without any entitlement to any extension of time or other relief.

TIE00899939_1060

9.4 No alteration or modification to the scope, quality, quantity or nature of the Tram Supplier Works arising from the development of the detailed design or from the co-ordination or integration of the Design shall be construed or regarded as a Client Change.

.

TIE00899939_1061

PART B

tie METHOD STATEMENT REVIEW POLICY

1. PURPOSE

The purpose of this procedure is to ensure that we have a standard process for the preparation, contents, review and acceptance/ approval of all method statements whether created in-house or submitted by a contractor. This procedure is created to meet the requirements of the company Integrated Management System (IMS) which reflect the criteria specified in International Standards Organisation (ISO) BS EN ISO 9001, 14001 and Occupational Health and Safety Assessment Services (OHSAS) 18001.

2. SCOPE

The scope of this procedure shall address all method statements which are produced for all elements of work and that any risks and impacts associated with the work element are assessed and appropriate control measures are put in place to allow the work to be undertaken safely and in an environmentally compliant manner and in accordance with contract requirements.

When writing the method statement the author/ contractor shall ensure that all necessary items are covered and the format and consistency of information is achieved in accordance with the work being carried out.

All Contractors and Sub contractors shall provide method statements with consistent content and the appropriate approvals, prior to commencing work. Method statements shall be specific to the work content and shall NOT BE OF A GENERIC NATURE ensuring that adequate coverage of all safety, quality and environmental aspects are addressed.

A formal system for acceptance of all Method Statements detailing the contractors proposed work activities within each work site shall be assured in accordance with this procedure, prior to site works commencing.

TIE00899939_1062

3. FLOWCHART

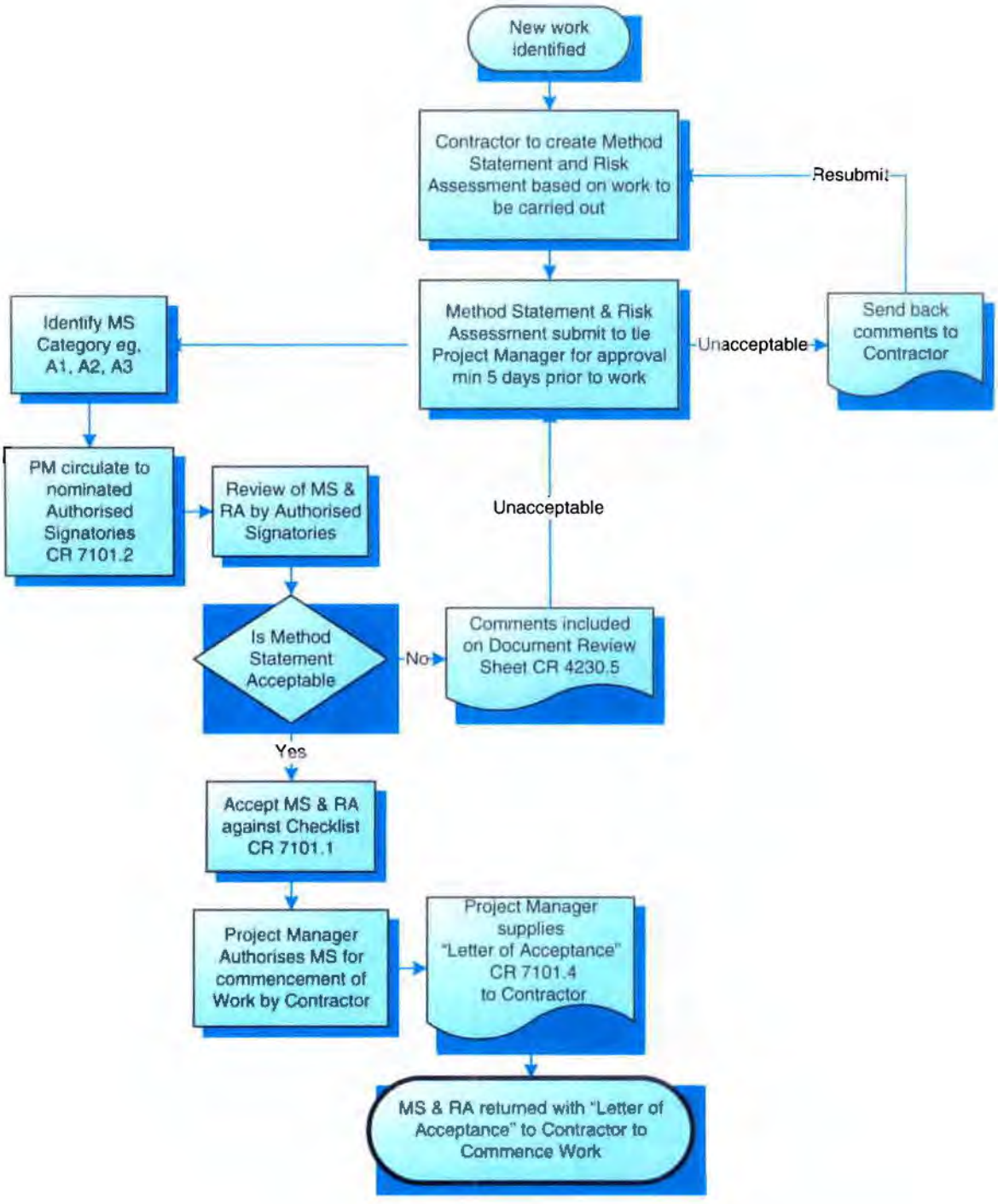

TIE00899939_1063

4. RESPONSIBILITIES

4.1 Company Responsibility

The company is responsible for ensuring that everyone works in a safe and environmentally friendly fashion, which includes not only employees but all associated 3rd party contractors whilst undertaking work at any **tie** worksite.

4.2 Management Responsibilities

4.2.1 Project Director

The Project Director is responsible for nominating the authorised signatories for the signing of method statements.

4.2.2 Project Managers

Project Managers are responsible for reviewing the procedure for suitability and implementation in operation including liaison with designated responsible persons and contractor personnel, as well as acting as the key contact person in liaison with the contractors over the accuracy and content of the method statement to meet the requirements of the contract. Project Managers shall record all related method statements, maintaining and updating the method statement tracker database. final acceptance/ sign-off of the method statement lies with the Project Manager.

4.2.3 Construction Manager

The Construction Manager is responsible for implementing the procedure and liaising with designated responsible persons and contractors in ensuring the supply of adequate method statements and risk assessments to address all related construction work on the project.

4.2.4 Project HSQE Manager

The Project Health, Safety, Quality and Environmental (HSQE) Manager is responsible for the monitoring of this procedure. Further responsibilities include liaising with the Project Manager and designated responsible persons and contractors over the accuracy and content of the method statement to meet the requirements of the contract.

TIE00899939_1064

4.2.5 Project Administrator

The Project Administrator is responsible for the registering, filing and retrieval of all records associated with this procedure.

4.2.6 Contractor

The Contractor is responsible for the submission of all relevant method statements and relevant documentation associated with their aspects of the contract, in sufficient time for **tie** to review, accept and where discrepancies/ comments are identified, to resubmit prior to commencement of any associated work.

5. PROCEDURE

All work elements shall require a method statement to cover the methodology, safety, quality and environmental aspects of the work. Method statements must be contract, and site specific and relevant to the work being carried out.

All method statements shall be submitted through the document control process, to allow correct transmittal and tracking of these documents.

No works shall commence until a method statement has been written, accepted and briefed to all related staff, for the works concerned.

The Project Manager shall ensure that method statements are written and provided by contractors, and that they are correctly reviewed and accepted by the authorised signatories. Final acceptance/ sign-off of the method statement lies with the Project Manager. The Letter of Acceptance sign-off sheet must be completed and received by the contractor, before any work commences.

The following categories identified below can be used as guidance to assess the risk associated with the work addressed in any method statements and ensure that all relevant authorities address the review of the document prior to implementation on a project.

TIE00899939_1065

5.1 Categorisation of Method Statements

CATEGORY	RISK	AUTHORISATION
A1	**Low risk.** *Minimum implications on Human life or the Project* *E.g., Fixed parts protruding into passageways, excessive storage, sharp edges on equipment, low level fumes/ dust, non intrusive surveys.* *Subject to contractors review & approval process*	***Prepared*** *by Contractor/ Sub Contractor* ***Approved*** *by Contractor/ Sub Contractor*
A2	**Medium risk.** *Possibly implications on Human life or the Project* *E.g., Electrical equipment which is electrically untested or worn un-inspected slings for lifting duties, intrusive surveys.* *Provided to* ***tie*** *for information*	***Prepared*** *by Contractor/ Sub Contractor* ***Approved*** *by Contractor/ Sub Contractor* ***For Information tie*** *Ltd Project Manager*
A3	**High risk.** *Major implications on Human life or the Project.* *E.g., Equipment with inadequate guarding, or electrical equipment with damaged cabling, piling, earthworks.* *Due to high risk* ***tie*** *acceptance required.*	***Prepared & Approved*** *by Contractor/ Sub Contractor* ***Accepted*** *by* ***tie*** *Ltd Project Manager*

A useful mnemonic to remember when addressing the Risk associated with equipment is "**GASP**" – **G**ood condition, **A**dequate strength, **S**ound condition & free from **P**atent defect.

Contractors shall be supplied with a copy of the **tie** Method Statement Requirements CR 7101.2 as guidance for the creation of method statements to suit the company requirements. This allows the checking and acceptance process to be simplified while giving the contractor the opportunity to provide the necessary information under the requisite headings.

Method statements must be submitted at least 5 working days prior to being required for operations, to avoid possible delays in revisions to content and the seeking of project acceptance signatories.

The method statement must be accepted at least 2 working days prior to the works commencing.

Any comments concerning the method statement and its content shall be recorded by the accepters using the Method Statement Review Checklist CR 7101.1 and issued to the Project Manager for subsequent review. This shall ensure that there is no duplication of comments prior to submission to the contractor.

TIE00899939_1066

The flowchart which forms part of this procedure, explains the process of submission, review and re-submission.

All method statements and associated relevant information shall be briefed to the work force prior to starting work. This briefing is recorded by the contractor on their relevant briefing record attached to the method statement.

5.2 Method Statement Content

Method statements are to be compiled by the Contractor or internally using the Method Statement Requirements CR 7101.2 as guidance. This procedure and the associated requirements indicate what items should be covered within the method statement, as a minimum requirement.

Method statements shall have a validity period from date of being prepared until completion of identified work. Method statements are required to be reviewed and amended, if necessary, when a work process changes ensuring that all details are still valid.

There are 17 Sections detailed within the "Method Statement Requirements" that must be addressed within a method statement, if applicable. Each heading has a guidance list as Bullet Points, detailed in the Method Statement Requirements and in the Method Statement Checklist CR 7101.1; this allows each heading to be completed using the italic notes as pointers. Other specific and pertinent information may be added if required.

Section 17 indicates what supporting information must be attached to the method statement. The list of supporting information is itemised in the table of contents and shall be ticked against each itemised aspect identifying the relevant information addressed accordingly.

The method statement must be signed by all **tie** authorised persons designated by the Project Director on the Authorised Signatories List CR 7101.3 in accordance with the "Categorisation of Method Statements" in Section 5.1 above. Prior to being copied to site; the "Letter of Acceptance" CR 7101.4 supplied by the Project Manager must accompany the method statement, this is confirmation that the method statement on site is the current issue.

The contractor shall ensure that the method statements are briefed to the operators who will be undertaking the identified work. Records of evidence of compliance showing that operators having been briefed, by a competent person must be available as proof that briefing have been carried out. Signed briefings are objective evidence, of staff understanding, of the application of the method statement relevant to the work that they have to carry out.

TIE00899939_1067

5.3 Further Supporting Information

Additional information such as risk assessments, Control of Substances Hazardous to Health (COSHH) assessments, environmental impacts, permits to work, drawings, design details, hazard directory/ log and sectional appendices including extracts may also be required to fully support the information in completing a method statement. If this information is required, it shall be annotated and attached to the method statement.

6. HEALTH, SAFETY AND ENVIRONMENTAL REQUIREMENTS

This procedure directly impacts on the health, safety and environmental requirements of the individuals and related project work.

7. REFERENCES

7.1 External Documents

The following external documents are referenced herein.

Doc Type/ Number	Document Title
BS EN ISO 9001	Quality Management Systems – Requirements
BS EN ISO 14001	Environmental Management Systems – Specification with guidance for use
OHSAS 18001	Occupational Health & Safety Management Systems – Specification

7.2 Internal Company Documents

The following **tie** documents are referenced herein.

All identified records are deemed part of the company management system and shall be maintained in the live files for a period of one year and then in archive for a period of 5 years.

Doc Reference Number	Document Title
CP 6220	Learning and Development Procedure
CR 7101.1	Method Statement Review Checklist
CR 7101.2	Method Statement Requirements
CR 7101.3	Authorised Signatories List
CR 7101.4	Letter of Acceptance

TIE00899939_1068

8. DEFINITIONS & ACRONYMS

The following definitions and acronyms apply to this document.

Word or Acronym	Definition
Acceptance	The process of reviewing and acknowledging the content of the method statement, as suitable to ensure that the identified risks have been mitigated and controlled.
COSHH	Control of Substances Hazardous to Health
GASP	Good condition, Adequate strength, Sound condition & free from Patent defect
Hazard	Anything that has the potential to cause harm.
HSQE	Health, Safety, Quality and Environment
High Risk	A condition or practice likely to cause:- loss of life/ plant/ equipment or property; or a dangerous occurrence reportable under RIDDOR.
IMS	Integrated Management System
ISO	International Standards Organisation
Low Risk	A condition or practice which may result in:- minor, non disabling injury or illness which results in little of no lost time; or minor non-disruptive damage to plant, equipment or property.
Medium Risk	A condition of practice which is likely to:- cause serious injury or illness resulting in temporary disability to one or more persons; or damage to plant, equipment or property, which results in disruption to normal activities.
OHSAS	Occupational Health & Safety Assessment Services
Risk	The level of harm that will arise from a hazard with or without control measures in place.
tie	The Limited Company

9. TRAINING

Education and Training associated with this procedure shall be carried out in accordance with Company Procedure for Learning and Development CP 6220.

All **tie** employees, consultants and contractors are required to be made aware of the requirements of this procedure and the relevant legislation associated with its implementation. All operators shall be briefed on method statements relevant to their area of work.

10. DOCUMENTATION CHANGE CONTROL HISTORY

Revision	Date	DCR No	Reason for Change
0.0	25/09/07	0017	1st Issue
1.0	18/12/2007		Re-define of use on comments from Project Managers

TIE00899939_1069

PART C

DESIGN MANAGEMENT PLAN

1. Purpose

1.1. Plan Objectives

1.1.1. To provide the overall strategy for the detailed design of ETN and its subsequent review.

1.1.2. This plan will be reviewed regularly to ensure effectiveness.

1.2. Documentation Structure

1.2.1. The following chart highlights where the Design Management Plan sits in relation to the overarching Edinburgh Tram Project Management Plan and the various other work stream plans developed specifically for the Edinburgh Tram Project. The Design Management Plan is viewed as a Level 3 Document within the Hierarchy, whereby any associated procedures and support documents will be referenced within it.

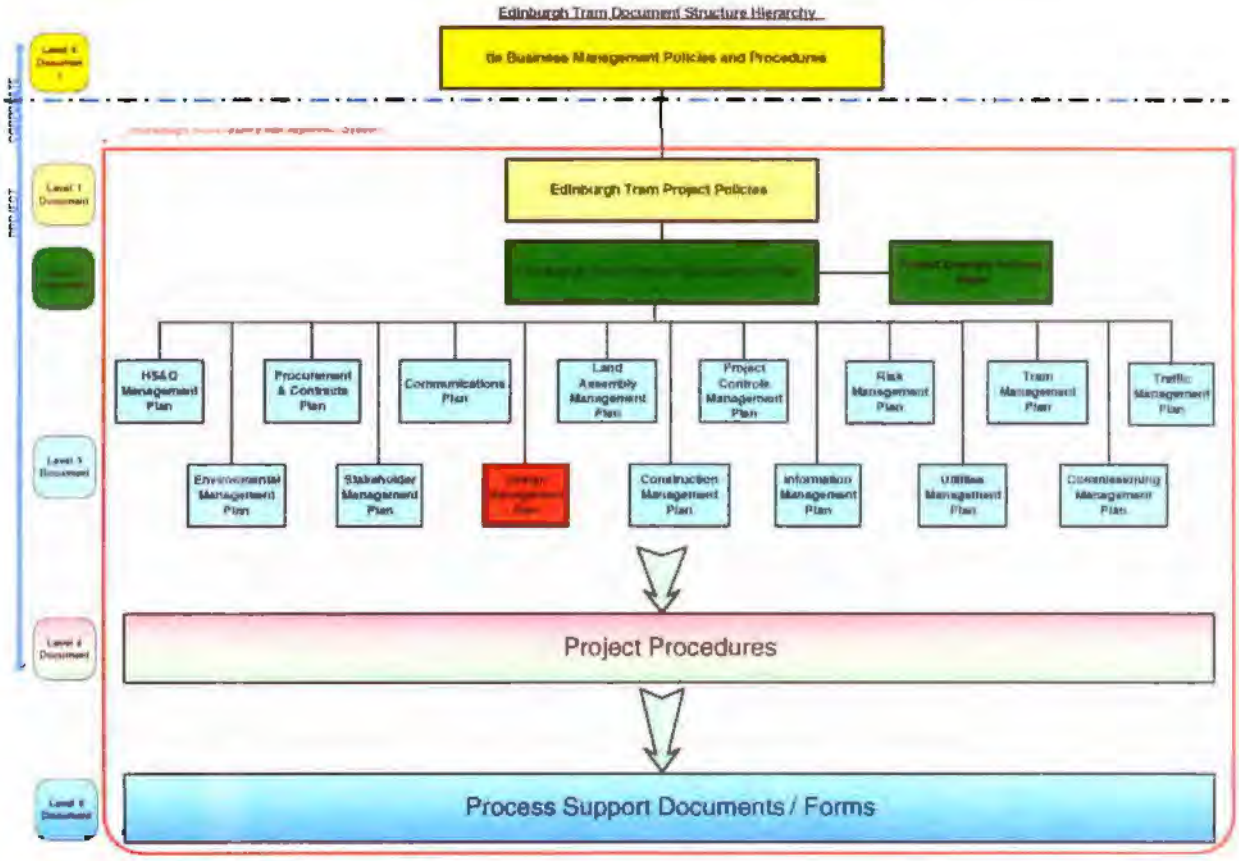

TIE00899939_1070

2. Overview

2.1. Detailed Design

2.1.1. Post-novation of the SDS Agreement, and the Tramco Agreement respectively, the complete Tram system detailed design, which is relevant for the Infraco scope of works, will be delivered by Infraco.

2.1.2. Infraco is the principal party in respect of design, with the SDS and Tramco contracts for design and build novated to them. In the notes below, where the term 'SDS/Infraco/Tramco' is used, it is intended to refer to a process managed by Infraco in respect of these novated arrangements.

2.1.3. The effectiveness of detailed design is critical to the success of ETN. It:

- allows the Infraco to construct and maintain the works within the constraints of the Infraco Agreement;
- delivers a wide range of statutory and non-statutory approvals;
- achieves system safety to the requirements of safety legislation via the ICP; and
- provides a design which complies with the requirements of the Parliamentary Acts and within the constraints set out by Promoter.

2.1.4. Detailed design takes the preliminary design forward to achieve a series of deliverables, which are tailored to obtain consents and approvals and to provide all information required to allow the Infraco works to be constructed.

2.1.5. In addition to the design covered by SDS, certain design elements will be produced directly by Infraco. This also includes all necessary system integration activity, including integration of the tram vehicle into the system.

2.1.6. Through Infraco, Tramco will design the tram vehicle and any necessary activity to ensure that the vehicle can be integrated into the tram system, as defined by Infraco.

2.2. Design Review Process

2.2.1. As required, designs will each be reviewed, for, or under:

2.2.1.1. **'Prior Approvals'** - a CEC planning approvals process, which is in lieu of a

TIE00899939_1071

full council Planning Committee application for matters of public interest which require such approvals (as defined in the relevant Acts). Documents submitted for Prior Approval generally present outline design information that will require further development to detailed design standard after Planning Permission has been granted. Note: the tram vehicle as well as any temporary works and temporary traffic management measures are not subject to Prior Approval (see para 2.6.1). **Prior Approvals** comprise:

- An Informal Consultation: a period of consultation of 8 weeks duration with CEC Case Officers to allow a good understanding of design content and basis.

- The Prior Approval itself: an administrative process of 8 weeks duration carried out with the delegated authority of the CEC Planning Committee which provides formal planning consent to designs which require it. This **element of the process causes designs to be made public following Informal** Consultation. A protocol exists to deal with exceptions to this process which requires a full application to the Planning Committee

2.2.1.2. **Technical Approvals** of the designs provide formal technical approvals for the various design elements by the relevant competent authority. Usually, these will be sought from CEC, in respect of their statutory authority role. However, others will also be needed from bodies such as the Scottish Environment Protection Agency, Scottish Natural Heritage and the Department for Transport. Unless otherwise agreed with CEC a review period of 8 weeks shall apply for all Technical Approvals associated with CEC. Technical Approvals may include, as appropriate:

- **Approvals in Principle (AIP)** for structures in accordance with the requirements of CEC or Network Rail in their role as Technical Approval Authority. Documents submitted for AIP generally present outline design information that will require further development to detailed design standard after AIP has been granted.

2.2.1.3. A **tie**-led 4-week **Design Review** process, which includes stakeholders and BBS, SDS, CAF and Transdev whose purpose is to review selected design packages for the effective integration of design elements to create an operationally acceptable tram system. The tram vehicle design will itself be subject to this design review process.

TIE00899939_1072

[Omit flow chart]

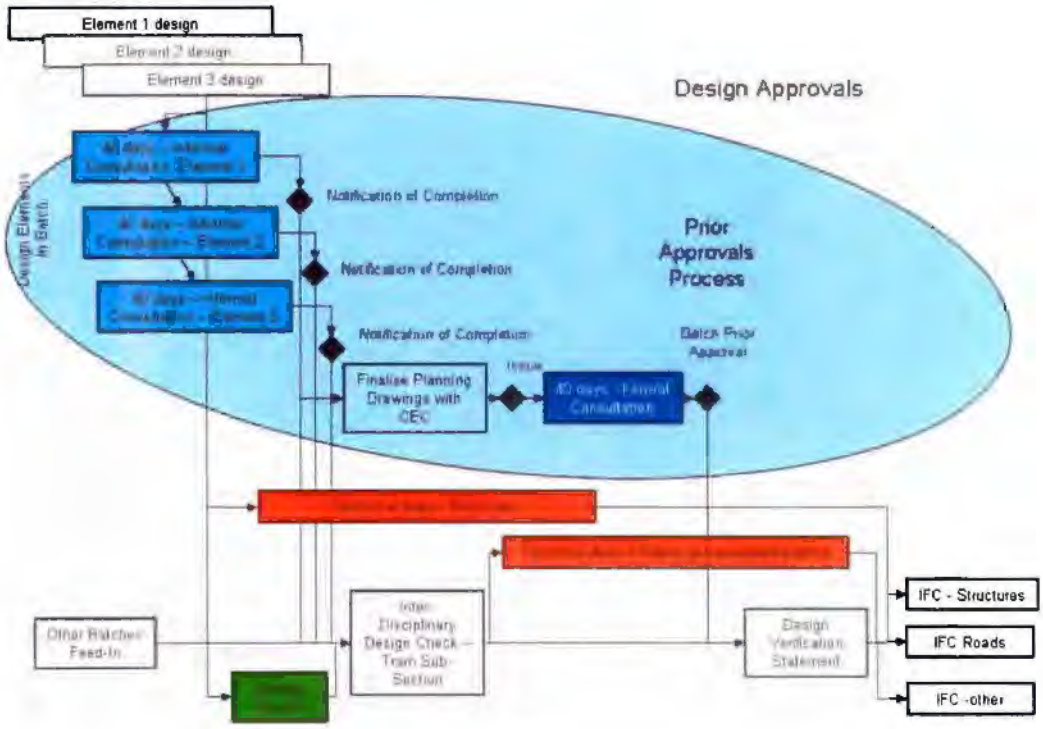

2.2.2. The management arrangements and associated accountabilities are defined in Section 2.9, below.

2.3. Revision of design

2.3.1. It is possible that revision of some completed design elements may be required from time to time. This may occur, for example, because a Value Engineering opportunity is identified, **tie** issues a Change Order, or SDS/Infraco/Tramco issue a Change Request. For major changes, whatever the source of initiation of the change of design, the new design must undergo all necessary design processes to ensure IDC and overall compliance with requirements.

2.3.2. Minor design changes can be agreed between SDS/Infraco/Tramco and **tie** outside the formal design review process. Minor design changes are defined as those changes that do not affect the nature, scale and principal detailing of a design proposal.

2.3.3. Typical examples for minor design changes are:

- Alternative rebar arrangements required to suit construction methods
- Adjustments to pipe / duct runs to avoid potential underground features

TIE00899939_1073

- Local adjustments to the positions of highway features such as re-positioning of signs to avoid clashes with underground services
- Correction of errors by the designer
- Clarifications on drawings, such as adding dimensions

2.3.4. It should be noted that the list of minor design changes above is not exhaustive. Through an appropriate process, as part of their management system, it is for SDS/Infraco/Tramco to make the case for each such change to be designated as minor.

2.4. Submission of Designs

2.4.1. SDS/Infraco/Tramco will submit packages of design to **tie** electronically, to an agreed programme. Before this happens SDS/Infraco/Tramco will have been an integral part of a number of interfacing activities, whose purpose it is to inform detailed design such that it is most likely to be as expected at first submission and to ensure that all technical interfaces are co-ordinated.

2.5. Technical Approvals

2.5.1. Technical Approvals requirements will be defined by any or all of **tie,** CEC, Network Rail, Department for Transport. Matters which require Technical Approval by CEC are defined by the Council's duties under the Roads (Scotland) Act 1984. These are primarily concerned with the structural integrity of the completed design and with roads design. It is CEC's practice to handle as much as possible within the roads Technical Approval so that, for example, roads construction consent and overall roads design approval are dealt with in a single submission. The systems design and tram vehicle are not subject to CEC Technical Approval; they are subject to design review by **tie.**

2.6. Prior Approvals

2.6.1. 'Prior Approvals' requirements will be defined by CEC. Matters which require Prior Approvals are defined by Section 73 of the Edinburgh Tram Acts and Class 29 in Part 11 of Schedule 1 to the Town and Country Planning (General Permitted Development) (Scotland) Order 1992. These are mainly the structures, the overhead line equipment, lighting, tramstops and any buildings. The tram vehicle as well as any temporary works and temporary traffic management measures are not subject to Prior Approval.

TIE00899939_1074

2.7. Design Review

2.7.1. The purpose of the **tie**-led Design Review process is to take selected packages of submitted design and review them for the fit of the design with stated requirements. It is primarily concerned with providing assurance that **tie** can demonstrate to the Independent Competent Person that the requirements of ROGS are being met. It does so by addressing the design as an effective integration of design elements to create an operational tram system which meets the requirements. **The design review is not an approval process and does not does not dilute the accountability of SDS/Infraco/Tramco for good-quality, fit-for-purpose design and securing approval for that design.** In the event of a clash between offered design and stated requirements the review will include the taking of a decision as to the required outcome.

2.7.2. Issues which emerge comprise a Record of Review (RoR), co-ordinated by **tie** which then will be addressed by SDS/Infraco/Tramco and transferred into other similarly applicable designs.

2.7.3. The overall permanent works design comprises several hundred design elements. Generally, SDS/Infraco/Tramco shall prepare Design Assurance Statements (DAS) for the combination of all design elements relevant for each geographic sub-section and submit these together with the design data for **tie** review.

2.8. Design Assurance Statement

2.8.1. Packages of design will be submitted to **tie** by SDS/Infraco/Tramco with an associated Design Assurance Statement, which will detail how the design complies with statutory, stated and best-practice requirements.

2.8.2. When packages of design have been submitted for review, the review will comprise examination of how each package demonstrates:

- How it meets the Employers Requirements
- How it meets stakeholder requirements
- How it meets the Approvals and Consents requirements (including CEC and other 3rd Parties)
- How it closes issues raised in previous Records of Review

TIE00899939_1075

- How it complies with engineering standards – or how it handles non-compliances (SDS to specify following initial review period)
- How it meets the Verification and Validation requirements
- How it mitigates hazards from the Hazard Log
- How it meets the Detailed Design Case for Safety
- How it meets the CDM requirements
- How it is "Fit for Purpose"
- How it meets the CEC Street's Design manual
- How it meets the CEC Tram Design Manual
- How it meets requirements, comments or ROR issues raised at PD, TDWG or RDWG and by CEC at PD1
- How it meets with run-time requirements
- How it meets with RAMS definitions

2.8.3. Where sub-packages of design are submitted for review, whilst a full DAS may not be available, a written statement of conformance with the maximum possible inclusion of the main points above is required.

2.9. Key Responsibilities

2.9.1. **tie's** Engineering Services Director is responsible for the overall management of this Plan, chairing the **tie**-led design reviews; arbitrating where during design review a conflict arises over offered design and stakeholder requirements; and ensuring that this Plan is effective and is complied with. He shall also assist Infraco during the design approval and consultation process, noting that final accountability for gaining approvals rests with Infraco.

2.9.2. SDS/Infraco/Tramco is responsible for detailed design and for management of the external approvals process to ensure successful approval of the design, first time. Infraco is the principal party in respect of design with the SDS and Tramco contracts for design

TIE00899939_1076

and build novated to them. Where the term 'SDS/Infraco/Tramco' is used it is intended to refer to a process managed by Infraco in respect of these novated arrangements.

2.9.3. **CEC** is responsible for ensuring their compliance with timescales within this plan and for attendance at necessary meetings required during the process.

2.9.4. Stakeholders are responsible for appropriately resourcing the requirements of this Plan such that their needs are covered.

2.10. Definitions

- **CEC**: City of Edinburgh Council. Promoter of the Edinburgh Tram Network (ETN).
- **Stakeholder:** a party who has a stated requirement to be complied with.
- **SDS**: The Systems Design Services contractor – i.e. Parsons Brinckerhoff and its sub-contractors.
- **Infraco:** The appointed Infraco - i.e. BBS
- **Tramco:** The appointed Tramco - i.e. CAF
- **TSS**: The Technical Services and Support contractor – i.e. Scott Wilson and its sub-contractors.
- **ICP**: The Independent Competent Person, as defined in the ROGS regulations; a person independent of the project appointed by **tie** to signify his non-objection to the overall tram system's construction, operation and maintenance.

TIE00899939_1077

3. Key Activities

3.1. Overview

3.1.1.The "RACI" Chart below details key tasks and their associated functional roles:

	Key Tasks	Functional Roles				
		Engineering Services Director	SDS/Infraco/Tramco	TSS	CEC, TEL, Transdev	tie HSQE Manager
Processes to inform detailed design	Set up meetings	A	R	CI	CI	CI
	Attend meetings and ensure appropriate people in attendance	A	R	C	C	C
	Prepare minutes of meetings	A	R	CI	CI	CI
	Raise RFIs and incorporate changes	A	R	CI	CI	C
	Respond to RFIs and raise changes	A R	C I	C I	C I	C
Detailed design	Raise issues for resolution	A	R	CI	CI	CI
	Incorporate all requirements	A	R	CI	CI	CI
	Verify design adequacy and quality	CI	AR	CI	CI	CI
	Prepare package delivery schedule	CI	AR	CI	CI	CI
	Prepare package verification detail	C	AR	C	C	C
Procedure Audit	Set up audit plan to cover this Design Management procedure	A	C	C	C	R
	Conduct audit and report results	A	CI	CI	CI	R
Design Review	Manage process	AR	CI	C	CI	CI
	Monitor programme	AR	CI	CI	CI	
	Compile management reports	A R	CI	CI	CI	CI

RACI is an acronym for:

R = Responsible – owns the delivery of the Activity

A = to whom "R" is **Accountable** – must sign-off (approve) the output of the Activities

C = to be **Consulted** – has information or capability to contribute to the activity

I = to be **Informed** – must be notified of results

TIE00899939_1078

3.2. Reporting

3.2.1.The Engineering Services Director will report 4 weekly to the Project Director.

3.3. Monitoring, Reviewing and Auditing

3.3.1.The Engineering Services Director shall regularly monitor the effectiveness of this Plan and shall formally review it at least once every three months.

The HQSE Manager shall audit compliance with this procedure to a schedule commensurate with the perceived risk.

[redacted]

Director/Authorised Signatory
tie LIMITED

[redacted]

Director/Authorised Signatory
CONSTRUCCIONES Y AUXILIAR DE FERROCARRILES S.A. (CAF)

This is Schedule 10 referred to in the foregoing Tram Supply Agreement between tie Limited and Construcciones Y Auxiliar de Ferrocarriles S.A. (CAF)

SCHEDULE 10

BONDS AND COLLATERAL WARRANTY

Part A

Reliability Bond

BETWEEN

(1) **[◆]**, a company incorporated in **[◆]** under company number **[◆]** whose registered office is at **[◆]** ("**the Surety**"); and

(2) [ ], a company incorporated in Scotland under number [ ] and having its registered office at [ ] (the "**Client**").

WHEREAS

A. The Client entered into an agreement for the appointment of a contract (hereinafter referred to as the "**Tram Supply Agreement**") dated **[◆]** with **CAF** ("**Tram Supplier**") to provide trams for use on the light rapid transit system in Edinburgh known as the Edinburgh Tram Network.

B. Clause 44 (*Reliability Bond*) of the Tram Supply Agreement obliges the Tram Supplier to provide to the Client an unconditional irrevocable Reliability Bond on the conditions and in the form set out in Schedule 10 (*Bonds and Collateral Warranty*) to the Tram Supply Agreement, issued by a surety acceptable to the Client and callable subject only to written notification by the Client.

C. In consideration of the Client accepting the Surety's obligations set out below in discharge of the Tram Supplier's undertaking to provide a reliability bond under Clause 44.3 (*Reliability Bond*) of the Tram Supply Agreement, the Surety hereby irrevocably and unconditionally agrees and undertakes to pay to the Client a sum not exceeding **5% of the Aggregate Tram Price** (the "**Bonded Amount**")

and the Surety accordingly covenants with the Client and agrees as follows:

1. Upon receipt by the Surety of a demand or demands ("**Demand Notice**") from the Client certifying that the Tram Supplier has failed to establish Reliability of the Trams in accordance with clause 44.4 of the Tram Supply Agreement, and without being entitled or obliged to make any enquiry or proof or contestation or impose any further conditions on the Client (or

TIE00899939_1080

the Tram Supplier) and without the need for the Client to take any legal action against or to obtain the consent of the Tram Supplier and without any right of set-off, abatement or counterclaim, the Surety shall forthwith (and in any event no later than five business days following receipt of the Demand Notice) pay to the Client the amount or amounts specified in such Demand Notice(s) in immediately available funds by electronic transfer to the account nominated in the Demand Notice, not exceeding in aggregate the Bonded Amount; it being confirmed that the Client may make as many separate demands hereunder as the Client thinks fit. The Client shall not be obliged to exercise any other right or remedy the Client may have before making a demand under this Reliability Bond.

2. A Demand Notice received from the Client in accordance with paragraph 1 above shall be conclusive evidence of the Surety's liability to pay to the Client and of the amount of the sum or sums which the Surety is liable to pay. The Surety's obligation to make payment under this Reliability Bond shall be a primary, independent and absolute obligation and the Surety shall not be entitled to delay or withhold payment for any reason. The Surety's obligation hereunder shall not be affected by any act, omission, matter or thing which, but for this provision, might operate to release or otherwise exonerate the Surety from the obligations hereunder in whole or in part, including without limitation and whether or not known to the Surety or to the Client:

2.1 any time or waiver granted to the Client or to the Tram Supplier;

2.2 the taking, variation, compromise, renewal or release of or the refusal or neglect to perfect or to enforce any rights, remedies or securities against the Client or the Tram Supplier;

2.3 any legal limitation, disability or incapacity relating to the Client or the Tram Supplier;

2.4 any variation of or amendment to the Tram Supply Agreement (or related documentation) or the works or services to be performed thereunder or any other document or security so that references to the Tram Supply Agreement in this Reliability Bond shall include each such variation and amendment;

2.5 any unenforceability, invalidity or frustration of any rights or obligations of the Client or the Tram Supplier under the Tram Supply Agreement or any other document or security; and

2.6 any other fact, circumstance, provision of statute or rule of law which might, were the Surety's liability to be secondary rather than primary, entitle the Surety to be released or discharged in whole or in part from the Surety's undertaking.

3. NOT USED

4. NOT USED

5. NOT USED

6. The Surety's liability under this Reliability Bond shall not be affected or reduced by the insolvency of the Tram Supplier or its liquidation, receivership or other like temporary or permanent status.

7. The Client shall be at liberty to compromise, release, waive or neglect any security as it sees fit, without impairment of their rights under this Reliability Bond.

8. This Reliability Bond shall cease to have effect ninety days after the earlier of the date of expiry or the date of termination of the Tram Supply Agreement, save in connection with any Demand Notice issued to the Surety in writing prior to the expiry of the said period of ninety days.

9. The Client shall be entitled to assign this Reliability Bond without the consent of the Surety.

10. Any notice to be served under this Reliability Bond must be in writing and must be delivered by hand or by registered post or recorded delivery at Construcciones y Auxiliar de Ferrocarriles S.A. CAF, J.M. Iturrioz 26, 20200 Beasain (Guipuzcoa), Spain. Service shall take effect, if given by hand, on the date of delivery. If given by post, it shall take effect 2 days after posting, excluding Saturdays, Sundays and statutory holidays.

11. This Reliability Bond shall be governed by and construed in accordance with the Laws of Scotland and the Parties hereby agree to submit to the exclusive jurisdiction of the Court of Session over any claim arising out of this Reliability Bond.

12. A person who is not a party to this Reliability Bond shall have no right to enforce any of the terms of this Reliability Bond.

TIE00899939_1082

13. In this Reliability Bond:

13.1 the words and expressions have the same meanings as in the Tram Supply Agreement and we shall be deemed to have full knowledge of the terms and conditions of the Tram Supply Agreement;

13.2 "person" includes any firm and any entity having legal capacity; and

13.3 the definitions given in the recitals apply to the rest of this Reliability Bond.

IN WITNESS WHEREOF

EXECUTED for and on behalf of **[THE SURETY]** at

on 200[◆] by:

Director/Authorised Signatory _____

Full Name _____

Witness Signature _____

Full Name _____

Address _____

_____

EXECUTED for and on behalf of [ ] at

on 200[◆] by:

Director/Authorised Signatory _____

Full Name _____

Witness Signature _____

Full Name _____

Address _____

_____

TIE00899939_1083

APPENDIX 1

DEMAND NOTICE

[date]

SURETY
[Address]
Attention: [Responsible Officer]

Dear Sirs

Reliability Bond [◆] [Ref: ◆]
Edinburgh Tram Network - Construcciones y Auxiliar de Ferrocarriles S.A.

This is our formal demand for payment pursuant to Clause 1 of the above instrument issued by you in our favour for the amount of £2,787,951. Please pay the sum of £[◆] forthwith by electronic transfer to [◆ ***bank account details***].

We hereby certify that Construcciones y Auxiliar de Ferrocarriles S.A.(CAF) has failed to establish Reliability in respect of any Tram after the expiry of 13 full Reporting Periods from the commencement of Passenger Services. In accordance with Clause 2 of the Reliability Bond, we attach a certified copy of the relevant default notice.

Yours faithfully,

_____

_____
Director and authorised signatory
for and on behalf of [ ]

TIE00899939_1084

Part B

TRAM SUPPLIER COLLATERAL WARRANTY

(1) [*OTHER THIRD PARTY BENEFICIARY*]

- and -

(2) CONSTRUCCIONES Y AUXILIAR DE FERROCARRILES S.A. (CAF)

COLLATERAL WARRANTY IN FAVOUR OF [*THIRD PARTY BENEFICIARY*] FROM CONSTRUCCIONES Y AUXILIAR DE FERROCARRILES S.A. (CAF)

relating to

THE TRAM SUPPLY AGREEMENT

TIE00899939_1085

AGREEMENT

BETWEEN

(1) **[[third party beneficiary]** [(company number **[◆]**) whose registered office is at **[◆]]** ***OR*** [carrying on business together in partnership under the name of **[◆]** at **[◆]]]** [("**Beneficiary**") which expression shall include its successors and permitted assignees.; and

(2) **CONSTRUCCIONES Y AUXILIAR DE FERROCARRILES S.A. (CAF)** a company registered in Spain in the Corporate Register of Guipuzcoa: volume 983, sheet 144, page number SS-329, entry 239 whose registered office is at J.M. Iturrioz 26, 20200 Beasain (Guipuzcoa), Spain ("**Tram Supplier**").

BACKGROUND

A By an agreement in writing dated **[◆]** (the "**Tram Supply Agreement**"), **tie** appointed the Tram Supplier to design, manufacture and supply Trams and supply documentation and associated equipment in connection with the Edinburgh Tram Network.

B It is a term of the Tram Supply Agreement that the Tram Supplier shall enter into this Agreement with the Beneficiary.

IT IS AGREED as follows:

1. **DEFINITIONS AND INTERPRETATION**

In this Agreement:

1.1 the following words and expressions have the following meanings, unless the context requires otherwise:

"**Agreement**" means this document (as amended from time to time pursuant to clause 11);

"**Deliverables**" means all documents, information, reports, diagrams, records, method statements, risk assessments, manuals, schedules, databases, photographs, formulae, plans, designs, specifications, drawings, details, calculations, models and simulations, the outputs and reports based on any models, programmes and all other material created and/or provided by the Tram Supplier (or any other third party) in the performance of the Tram Works and the Tram Supplier 's obligations under the Tram Supply Agreement;

"**Edinburgh Tram Network**" means the tramway which is to be designed, constructed and maintained in Edinburgh in Phase 1a (forming part of Line One and Line Two as described in the Tram Legislation) and Phase 1b, or either of them (as may be amended from time to time together with any modification, line extension, spur, interconnection and any additional line which may be instructed), to be constructed in accordance with the Tram Legislation together with all associated works and facilities including all civil engineering and track works, Trams, infrastructure, plant, machinery and equipment installed or used for such tramway;

"**Good Industry Practice**" means using standards, practices, methods and procedures conforming to Law and exercising that degree of skill, care, diligence, prudence and foresight that would reasonably be expected from a large, reputable, professionally qualified, competent and skilled organisation experienced in carrying out activities of a similar nature, scope and complexity to those comprised in the Tram Works, and seeking in good faith to comply with its contractual obligations and all duties owed by it;

"**Insurance Period**" means the period of 12 years from the date of issue of the last certificate of substantial completion in respect of the Tram Works, as established pursuant to and for the purposes of the Tram Supply Agreement (or, if sooner, 12 years after termination of the employment of the Tram Supplier under the Tram Supply Agreement);

"**Intellectual Property Rights**" means any rights in or to any patent, design right, utility model, trade mark, brand name, service mark, trade name, business name, logo, invention (whether registered or unregistered), domain name, semi-conductor right, topography right, software designs and/or other materials, source code, copyright, moral right, know-how, or rights in databases and any other rights in respect of any industrial or intellectual property, whether capable of being registered or not, including all rights to apply for any of the foregoing rights or for an extension, revival or renewal of any of the foregoing rights and any similar or analogous rights to any of the above, whether arising or granted under the law of Scotland or of any other jurisdiction;

"**Law**" means:

(a) any Act or instruments of the Scottish Parliament or the United Kingdom Parliament or subordinate legislation within the meaning of section 21(1) of the Interpretation Act 1978, any exercise of the Royal Prerogative, and any

enforceable community right within the meaning of section 2 of the European Communities Act 1972;

(b) any applicable guidance, direction or determination issued by any regulatory body with which **tie**, CEC, the Client and/or the Tram Supplier is bound to comply; and

(c) any applicable judgment of a relevant court of law which is a binding precedent,

in each case in force, or applicable, in Scotland;

"**Line One**" means the tramway works as authorised by the Edinburgh Tram (Line One) Act 2006;

"**Line Two**" means the tramway works as authorised by the Edinburgh Train (Line Two) Act 2006;

"**Party**" means each and any of the parties to this Agreement and Parties shall be construed accordingly;

"**Tram Supply Agreement**" means the contract dated [□] made between the Client and the Tram Supplier;

"**Tram Works**" means the works and services to be undertaken by the Tram Supplier under the Tram Supply Agreement;

"**TEL**" means Transport Edinburgh Limited a company incorporated under the Companies Act with registered number SC269639 and having its registered office at 55 Annandale Street, Edinburgh, Midlothian, EH7 4AZ which shall include its successors in title and permitted assignees;

"**Trams**" means the tram vehicles to be provided for operation on the Edinburgh Tram Network;

"**Tram Legislation**" means the Edinburgh Tram (Line One) Act, the Edinburgh Tram (Line Two) Act and such other legislation relative to the Edinburgh Tram Network as may be enacted from time to time; and

1.2 unless the context requires otherwise:

1.2.1 words importing:

1.2.1.1 the singular include the plural and vice versa; and

1.2.1.2 one gender include all other genders.

1.2.2 a reference to:

1.2.2.1 persons includes firms, companies, corporations, partnerships, trusts, authorities and other incorporated and/or unincorporated bodies; and

1.2.2.2 a clause is a reference to a clause in this Agreement.

1.3 The list of contents and clause headings in this Agreement are included for convenience only and do not affect its interpretation.

1.4 Where a party comprises two or more persons:

1.4.1 any obligations on the part of that party contained or implied in this agreement are deemed to be joint and several obligations on the part of those persons; and

1.4.2 references to that party shall include references to each and any of those persons.

2. STANDARD OF CARE

2.1 The Tram Supplier warrants and undertakes to the Beneficiary that it has carried out and shall carry out the Tram Works and its other duties and obligations under the Tram Supply Agreement subject to and in accordance with the terms thereof.

2.2 In addition to and without derogation from clause 2.1, the Tram Supplier warrants to the Beneficiary that:

2.2.1 in the performance of the Tram Works and its other obligations under the Tram Supply Agreement it shall exercise a reasonable level of professional skill, care and diligence to be expected of a properly qualified and competent contractor experienced in carrying out works and services similar to the Tram Works in connection with projects of a similar type, nature and complexity;

2.2.2 any design produced by the Tram Supplier will satisfy in every respect any relevant performance specification or any requirement included or referred to in the Tram Supply Agreement and will be suitable in every respect for the

TIE00899939_1089

purposes included in or reasonably to be inferred from the Tram Supply Agreement; and

2.2.3 any design produced by the Tram Supplier will fully comply with Law.

2.3 The Tram Supplier shall owe a duty of care to the Beneficiary in carrying out its duties and obligations under the Tram Supply Agreement.

3. MATERIALS

3.1 The Tram Supplier warrants to the Beneficiary that it has not and shall not use any materials which at the time of use:

3.1.1 are known to be deleterious in the particular circumstances in which they are used (either to health and safety or to the durability of any works on which the Tram Supplier is employed by the Client); or

3.1.2 contravene any relevant standard or code of practice issued from time to time by the BSI Group or under a European directive relating to standards; or

3.1.3 do not accord with the guidelines contained in the edition of the publication "Good Practice in Selection of Construction Materials" (Ove Arup & Partners) current at the date of specification of use; or

3.1.4 contravene Good Industry Practice.

4. COPYRIGHT LICENCE

4.1 The Tram Supplier hereby grants to the Beneficiary a royalty-free and exclusive licence to use such Intellectual Property Rights in the Deliverables as may be necessary, for operation and maintenance of the trams but, not in any case, for manufacturing purposes, for the Beneficiary to use in relation to the [[Trams] ***OR*** [*other appropriate use*]]. This licence shall carry the right to grant sub-licences, and be transferable to third parties, subject to the prior written agreement of the Tram Supplier.

4.2 In so far as ownership of the copyright and any other Intellectual Property Rights in any Deliverable prepared or provided by the Tram Supplier in connection with the Edinburgh Tram Network is vested in any person other than the Tram Supplier, the Tram Supplier shall procure for the Beneficiary the benefit of such a licence as is referred to in clause 4.1 for the purposes referred to therein.

TIE00899939_1090

4.3 The Tram Supplier shall, if so requested at any time, execute such documents and perform such acts as may be required fully and effectively to assure to the Beneficiary or any third party the rights referred to in this clause 4.

4.4 The Tram Supplier shall provide to the Beneficiary a copy of any of the Deliverables as soon as reasonably practicable after receipt by the Tram Supplier of a written request from the Beneficiary to do so, unless already delivered to tie.

4.5 The Tram Supplier undertakes to the Beneficiary that the use by the Beneficiary of any of the Deliverables for any purpose provided for in this clause 4 shall not infringe the rights of any third party in relation to the Deliverables.

5. REQUIRED INSURANCES

5.1 The Tram Supplier undertakes that:

5.1.1 it has maintained and shall maintain during the performance of its obligations under the Tram Supply Agreement and the Insurance Period each of the insurances as follows:

5.1.1.1 professional indemnity insurance with an insurer authorised to carry out insurance business in the United Kingdom for an amount not less than £80,000,000 on an each and every claim basis and £80,000,000 on an aggregate basis in respect of pollution and contamination claims and date recognition claims, in respect of the legal liability of the Tram Supplier as a result of any negligent act, error or omission in the performance of the professional activities and duties in connection with the Tram Works and in the performance of its obligations under the Tram Supply Agreement; and

5.1.1.2 further insurances held by the Tram Supplier as contained in Schedule 11 of the Tram Supply Agreement.

51.2 cover under the professional indemnity insurance is extended to include the Tram Supplier 's liabilities under this Agreement;

5.1.3 this Agreement has been disclosed to the Tram Supplier's current professional indemnity insurers or brokers (as the case may be) and shall be disclosed to any future professional indemnity insurers or brokers providing the insurance required by this Agreement; and

TIE00899939_1091

5.1.4 the Tram Supplier shall abide by the terms and conditions of insurance and shall not do or omit to do anything that might prejudice the cover or its right to make a claim.

5.2 As and when reasonably required by the Beneficiary, the Tram Supplier shall produce for inspection documentary evidence that such insurance is being properly maintained.

5.3 If the insurer makes or attempts to make any material alteration or purports to withdraw the Tram Supplier 's professional indemnity cover, or if the Tram Supplier is unable to obtain professional indemnity insurance, the Tram Supplier shall promptly give notice of this to the Beneficiary.

6. ASSIGNATION

6.1 The Tram Supplier shall not assign, novate or otherwise transfer the whole or any part of the Agreement without the prior written agreement of the Beneficiary.

6.2 The Beneficiary shall be entitled to assign, novate or otherwise transfer the whole or any part of this Agreement:

6.2.1 to the Scottish Ministers, TEL, CEC, Transport Scotland or any local authority; or

6.2.2 to any body with no worse financial standing than that of **tie** who takes over all or substantially all of the functions of **tie**; or

6.2.3 to any other person whose obligations under this Agreement are unconditionally and irrevocably guaranteed (in a form reasonably acceptable to the Tram Supplier acting reasonably) by **tie** or a person falling within Clause 69; or

6.2.4 to the Operator; or

6.2.5 without the consent of the Tram Supplier to any person listed above provided that no more than two such assignations will be permitted. Any assignations by the Beneficiary to a subsidiary or associated company of the Beneficiary or a member of the same group of companies will not count as an assignation;

6.2.2 with the prior written consent of the Tram Supplier (such consent not to be unreasonably withheld or delayed)

TIE00899939_1092

6.3 The Tram Supplier undertakes to the Beneficiary not to contend in any court proceedings under this Agreement that any person to whom the Beneficiary assigns or has assigned its rights under this Agreement or any of them in accordance with the foregoing provisions of this clause is to be precluded from recovering any loss resulting from any breach of this Agreement (whenever happening) by reason that such person is an assignee and not the original contracting party under this Agreement or by reason that the Beneficiary is named under this Agreement or any intermediate assignee of the Beneficiary escaped loss resulting from such breach by reason of the disposal of its interest in the same.

7. LIABILITY OF THE TRAM SUPPLIER

7.1 No provision of this Agreement is intended to exclude any obligation or liability which would otherwise be implied whether by the law of contract, delict or otherwise.

7.2 The responsibility of the Tram Supplier under this Agreement is not to be reduced or in any way released or limited by any enquiry or inspection by or on behalf of any person notwithstanding that such enquiry or inspection may give rise to a claim by the Beneficiary against a third party.

7.3 The rights and benefits conferred upon the Beneficiary by this Agreement are in addition to any other rights and remedies that the Beneficiary may have against the Tram Supplier including (without prejudice to the generality of the foregoing) any remedies in delict.

7.4 Subject to the other provisions of this Agreement, the liability of the Tram Supplier to the Beneficiary is to be determined in all respects in accordance with the terms of the Tram Supplier Agreement and, in the event of any claim by the Beneficiary under this Agreement, the Tram Supplier shall be entitled to rely upon any defence, right, limitation or exclusion under the Tram Supplier Agreement as though the Beneficiary were named as the Client under it, except that:

7.4.1 the Beneficiary shall not be affected by any subsequent variation of the Tram Supplier Agreement which would adversely affect the obligations owed by the Tram Supplier or the waiver, compromise or withdrawal of any claim made by the Client;

7.4.2 for the avoidance of doubt except under general law, nothing in this Agreement shall expose any Party to the application of Indirect Loss, and

TIE00899939_1093

7.4.3 the Tram Supplier shall not be entitled to exercise any right of set-off, retention or withholding against the Beneficiary to which the Tram Supplier may be entitled against the Client.

8. NOTICES

8.1 Any notice required to be given under this Agreement is to be hand delivered or sent by prepaid registered or recorded delivery post to the party concerned at its address set out in this Agreement or to such other addresses as may be notified by such party for the purposes of this clause.

8.2 Any notice given pursuant to this clause, if sent by special or recorded delivery, is deemed to have been received on proof of delivery.

9. RIGHTS OF THIRD PARTIES

9.1 A person who is not a party to this Agreement shall have no right to enforce any term of this Agreement.

10. INVALID TERMS

10.1 If any term of this Agreement shall be held to any extent to be invalid, unlawful or unenforceable:

10.1.1 that term shall to that extent be deemed not to form part of this Agreement; and

10.1.2 the validity and enforceability of the remainder of this Agreement shall not be affected.

11. VARIATIONS AND WAIVERS TO BE IN WRITING

11.1 No variation, alteration or waiver of any of the provisions of this Agreement shall be effective unless it is in writing and signed by or on behalf of the Party against which the enforcement of such variation, alteration or waiver is sought.

12. WAIVER

12.1 Save where expressly stated, no failure or delay by either Party to exercise any right or remedy in connection with this Agreement shall operate as a waiver of it or of any other right or remedy nor shall any single or partial exercise preclude any further

TIE00899939_1094

exercise of the same, or of some other right or remedy. A waiver of any breach of this Agreement shall not be deemed to be a waiver of any subsequent breach.

12.2 The Parties' rights and remedies under this Agreement are, except where provided otherwise in this Agreement, independent, cumulative and do not operate to exclude one another or any rights or remedies provided by law.

13. JURISDICTION AND LAW

13.1 This Agreement is governed by and is to be construed according to Scots law and the Scottish courts shall have jurisdiction in relation to all matters arising under it.

IN WITNESS WHEREOF these presents on this and the preceding [◆] pages are executed as follows:

EXECUTED for and on behalf of
CONSTRUCCIONES Y AUXILIAR DE FERROCARRILES S.A. (CAF) at
on 200[◆] by:

Director/Authorised Signatory _____
Full Name _____
Witness Signature _____
Full Name _____
Address _____
_____

EXECUTED for and on behalf of [***third party beneficiary***] at
on 200[◆] by:

Authorised Signatory _____
Full Name _____
Witness Signature _____
Full Name _____
Address _____
_____

TIE00899939_1095

Part C

ADVANCE PAYMENT BOND

(1) ACE EUROPEAN GROUP LIMITED

- in favour of -

(2) tie LIMITED

ADVANCE PAYMENT BOND

ADVANCE PAYMENT BOND

BETWEEN

(1) **ACE EUROPEAN GROUP LIMITED**, a company incorporated in the United Kingdom under company number 1112 892 whose registered office is at ACE Building, 100 Leadenhall Street, London, EC3A 3BP ("**the Surety**"); and

(2) **TIE LIMITED**, a company incorporated in Scotland under number SC230949 and having its registered office at City Chambers, High Street, Edinburgh EH1 1YJ ("**tie**") which expression shall include its successors, permitted assignees and transferees.

WHEREAS

A. **tie** entered into an agreement for the appointment of a contractor (hereinafter referred to as the "**Tram Supply Agreement**") dated [◆] with Construcciones y Auxiliar de Ferrocarriles S.A. (the "**Tramco**") to provide trams for use on the light rapid transit system in Edinburgh known as the Edinburgh Tram Network.

B. Clause 44 of the Tram Supply Agreement obliges the Tramco to deliver to **tie** an unconditional irrevocable bond on the conditions and in the form set out in Part C of Schedule 10 (*Bonds and Collateral Warranty*) to the Tram Supply Agreement, issued by a surety acceptable to **tie** and callable subject only to written notification by **tie** in terms of this Bond.

C. In consideration of **tie** accepting the Surety's obligations set out below in discharge of the Tramco's undertaking to provide a bond under Clause 44 of the Tram Supply Agreement, the Surety hereby irrevocably and unconditionally agrees and undertakes to pay to **tie** a sum not exceeding a total aggregate value of £11,008,325 (the "**Bonded Amount**") and the Surety accordingly covenants with **tie** and agrees as follows:

1. The Surety hereby covenants with **tie** that following receipt by the Surety of a notice in writing from **tie** in the form set out in Appendix 1 ("**Demand Notice**") that there has been an Insolvency Event in relation to the Tram Supplier, the Surety shall, promptly and in any event no later than four business days following receipt of the Demand Notice, pay to **tie** in full and without any deductions whatsoever or any right of set-off, abatement or counterclaim, the sum stated in the Demand Notice in immediately available funds by electronic transfer to the account nominated in the Demand Notice, not exceeding in aggregate the Bonded Amount.

TIE00899939_1097

2. Any Demand Notice must be made in writing signed by an authorised representative of **tie** and a copy of the written statement identifying the Insolvency Event must accompany the Demand Notice.

3. Upon receipt by the Surety of a Demand Notice from **tie** the Surety shall neither be entitled nor obliged to make any enquiry or proof or contestation or impose any further conditions on **tie** (or the Tramco) and **tie** shall not need to take any legal action against or to obtain the consent of the Tramco. **tie** may make as many separate demands hereunder as **tie** thinks fit. **tie** shall not be obliged to exercise any other right or remedy **tie** may have before making a demand under this Bond.

4. A Demand Notice received from **tie** in accordance with Clause 1 above shall be conclusive evidence of the Surety's liability to pay to **tie** and of the amount of the sum or sums which the Surety is liable to pay. The Surety's obligation to make payment under this Bond shall be a primary, independent and absolute obligation and the Surety shall not be entitled to delay or withhold payment for any reason. The Surety's obligation hereunder shall not be affected by any act, omission, matter or thing which, but for this provision, might operate to release or otherwise exonerate the Surety from the obligations hereunder in whole or in part, including without limitation (and whether or not known to the Surety or to **tie**):

   4.1 any time or waiver granted to **tie** or to the Tramco;

   4.2 the taking, variation, compromise, renewal or release of or the refusal or neglect to perfect or to enforce any rights, remedies or securities against **tie** or the Tramco;

   4.3 any legal limitation, disability or incapacity relating to **tie** or the Tramco;

   4.4 any variation of or amendment to the Tram Supply Agreement (or related documentation) or the works or services to be performed thereunder or any other document or security so that references to the Tram Supply Agreement in this Bond shall include each such variation and amendment;

   4.5 any unenforceability, invalidity or frustration of any rights or obligations of **tie** or the Tramco under the Tram Supply Agreement or any other document or security;

   4.6 any proceedings, formalities, intervention or appointment arising from the Insolvency Event; and

TIE00899939_1098

4.7 any other fact, circumstance, provision of statute or rule of law which might, were the Surety's liability to be secondary rather than primary, entitle the Surety to be released or discharged in whole or in part from the Surety's undertaking.

5. NOT USED.

6. NOT USED

7. NOT USED.

8. **tie** shall be at liberty to compromise, release, waive or neglect any security as it sees fit, without impairment of their rights under this Bond.

9. This Bond shall cease to have effect on ***[Insert date falling 18 months after the date on which the Advance Payment was made to Tramco]***, save in connection with any Demand Notice issued to the Surety in writing at any time up to 30 days from such date.

10. **tie** shall be entitled to assign or transfer this Bond without the consent of the Surety subject to giving notice to the Surety.

11. Any Demand Notice to be served by **tie** pursuant to this Bond shall be sent by **tie** to the Surety, to the Surety's address at the ACE Building, 100 Leadenhall Street, London, EC3A 3BP (and if sent by special or recorded delivery shall be taken as having been received by the Surety on the date of receipt by the Surety as evidenced by the relevant certificate of delivery) or shall be delivered personally to the Surety at the address set out in this Clause (and shall be deemed to have been received at the time of delivery).

12. NOT USED

13. This Bond shall be governed by and construed in accordance with the Laws of Scotland and the Parties hereby agree to submit to the exclusive jurisdiction of the Court of Session over any claim arising out of this Bond.

14. A person who is not a party to this Bond shall have no right to enforce any of the terms of this Bond.

15. In this Bond:

15.1 the words and expressions have the same meanings as in the Tram Supply Agreement and the Surety shall be deemed to have full knowledge of the terms and conditions of the Tram Supply Agreement;

TIE00899939_1099

15.2 "person" includes any firm and any entity having legal capacity; and

15.3 the definitions given in the recitals apply to the rest of this Bond.

IN WITNESS WHEREOF

EXECUTED for and on behalf of **ACE EUROPEAN GROUP LIMITED** at

on 2008 by:

Director/Authorised Signatory _____

Full Name _____

Witness Signature _____

Full Name _____

Address _____

_____

EXECUTED for and on behalf of **TIE LIMITED** at

on 2008 by:

Director/Authorised Signatory _____

Full Name _____

Witness Signature _____

Full Name _____

Address _____

_____

APPENDIX 1

DEMAND NOTICE

[date]

ACE EUROPEAN GROUP LIMITED
ACE Building
100 Leadnehall Street
LONDON
EC3A 3BP
Attention: [Responsible Officer]

Dear Sirs

Advance Payment Bond [◆ April 2008] [Ref: ◆]
Edinburgh Tram Network - Construcciones y Auxiliar de Ferrocarriles S.A.

This is our formal demand for payment pursuant to Clause 1 of the above instrument issued by you in our favour for the amount of £11,003,863. Please pay the sum of £11,003,863 forthwith by electronic transfer to [◆ ***bank account details***].

We hereby certify that Construcciones y Auxiliar de Ferrocarriles S.A.(CAF) has suffered an Insolvency Event [◆ ***describe insolvency event***].

Yours faithfully,

_____

_____
Director and authorised signatory
for and on behalf of **tie** Limited

TIE00899939_1101

Part D

(1) [◆][SURETY]

- in favour of -

(2) THE CLIENT

PERFORMANCE BOND

TIE00899939_1102

PERFORMANCE BOND

BETWEEN

(1) [◆], a company incorporated in [◆] under company number [◆] whose registered office is at [◆] ("**the Surety**"); and

(2) **[THE CLIENT]**, a company incorporated in [◆] under company number [◆] whose registered office is at [◆] (the "**Client**") which expression shall include its successors, permitted assignees and transferees

WHEREAS

A. The Client entered into an agreement for the appointment of a contractor (hereinafter referred to as the "**Tram Supply Agreement**") dated [◆] with **Construcciones y Auxiliar de Ferrocarriles S.A.** (the "**Tramco**") to supply trams for use on the light rapid transit system in Edinburgh known as the Edinburgh Tram Network.

B. Clause 44 of the Tram Supply Agreement obliges the Tramco to deliver to the Client an irrevocable performance bond on the conditions and in the form set out in Part D of Schedule 10 (*Bonds and Collateral Warranty*) to the Tram Supply Agreement, issued by a surety acceptable to the Client and callable subject only to written notification by the Client in terms of this Performance Bond.

C. In consideration of the Client accepting the Surety's obligations set out below in discharge of the Tramco's undertaking to provide a performance bond under Clause 44 of the Tram Supply Agreement, the Surety hereby irrevocably and unconditionally agrees and undertakes to pay to the Client a sum not exceeding a total aggregate value of £2,787,951 (the "**Bonded Amount**") and the Surety accordingly covenants with the Client and agrees as follows:

1. The Surety hereby covenants with the Client that following receipt by the Surety of a notice in writing from the Client in the form set out in Appendix 1 ("**Demand Notice**") that there has been an event of default by the Tramco, the Surety shall, promptly and in any event no later than five business days following receipt of the Demand Notice, pay to the Client in full and without any deductions whatsoever or any right of set-off, abatement or counterclaim, the sum stated in the Demand Notice in immediately available sterling (£) funds by electronic transfer to the account nominated in the Demand Notice, not exceeding in aggregate the Bonded Amount.

TIE00899939_1103

2. Any Demand Notice must be made in writing signed by an authorised representative of the Client and a certified copy of the written statement identifying the event of default and notifying Tramco of this must accompany the Demand Notice.

3. Upon receipt by the Surety of a Demand Notice from the Client, the Surety shall neither be entitled nor obliged to make any enquiry or proof or contestation or impose any further conditions on the Client (or the Tramco) and the Client shall not need to take any legal action against or to obtain the consent of the Tramco subject to clause 1 above, the Client may make as many separate demands under this Performance Bond hereunder as the Client thinks fit. The Client shall not be obliged to exercise any other right or remedy the Client may have before making a demand under this Performance Bond.

4. A Demand Notice received from the Client in accordance with Clause 1 above shall be conclusive evidence of the Surety's liability to pay to the Client and of the amount of the sum or sums which the Surety is liable to pay. The Surety's obligation to make payment under this Performance Bond shall be a primary, independent and absolute obligation and the Surety shall not be entitled to delay or withhold payment for any reason. The Surety's obligation hereunder shall not be affected by any act, omission, matter or thing which, but for this provision, might operate to release or otherwise exonerate the Surety from the obligations hereunder in whole or in part, including without limitation (and whether or not known to the Surety or to the Client):

4.1 any time or waiver granted to the Client or to the Tramco;

4.2 the taking, variation, compromise, renewal or release of or the refusal or neglect to perfect or to enforce any rights, remedies or securities against the Client or the Tramco;

4.3 any legal limitation, disability or incapacity relating to the Client or the Tramco;

4.4 any variation of or amendment to the Tram Supply Agreement (or related documentation) or the works or services to be performed thereunder or any other document or security so that references to the Tram Supply Agreement in this Performance Bond shall include each such variation and amendment;

4.5 any unenforceability, invalidity or frustration of any rights or obligations of the Client or the Tramco under the Tram Supply Agreement or any other document or security;

4.6 any proceedings, formalities, intervention or appointment arising from or causing the event of default;

TIE00899939_1104

4.7 any novation, transfer or other arrangement made by the Tramco whereby it no longer has a direct contractual relationship with the Client through the Tram Supply Agreement; and

4.8 any other fact, circumstance, provision of statute or rule of law which might, were the Surety's liability to be secondary rather than primary, entitle the Surety to be released or discharged in whole or in part from the Surety's undertaking or to suspend its obligations.

5. NOT USED

6. NOT USED

7. NOT USED

8. The Client shall be at liberty to compromise, release, waive or neglect any security as it sees fit, without impairment of its rights under this Performance Bond.

9. This Performance Bond shall cease to have effect on the date on which five trams have been certified by the Tram Inspector (appointed by **tie**) to have been delivered to Edinburgh by the Tramco and each has received a Certificate of Tram Commissioning and when a copy certified by **tie** as true and accurate of these certifications has been delivered by Tramco to the Surety, save in connection with any Demand Notice issued to the Surety in writing at any time up to 30 days after such date.

10. The Client shall be entitled to assign or transfer this Performance Bond without the consent of the Surety, subject to only giving notice to the Surety of any assignation.

11. Any Demand Notice to be served by the Client pursuant to this Performance Bond shall be sent by the Client to the Surety, to the Surety's address at [*Insert Address*] (and if sent by special or recorded delivery shall be taken as having been received by the Surety on the date of receipt by the Surety as evidenced by the relevant certificate of delivery) or shall be delivered personally to the Surety at the address set out in this Clause (and shall be deemed to have been received at the time of delivery).

12. [The Surety hereby appoints [◆] for service of process in Scotland. **If overseas bank is proposed as surety**]

TIE00899939_1105

13. This Performance Bond shall be governed by and construed in accordance with the Laws of Scotland and the Parties hereby agree to submit to the exclusive jurisdiction of the Court of Session over any claim arising out of this Performance Bond.

14. Saving following assignation, a person who is not a party to this Performance Bond shall have no right to enforce any of the terms of this Performance Bond.

15. In this Performance Bond:

15.1 the words and expressions have the same meanings as in the Tram Supply Agreement and the Surety shall be deemed to have full knowledge of the terms and conditions of the Tram Supply Agreement;

15.2 "person" includes any firm and any entity having legal capacity; and

15.3 the definitions given in the recitals apply to the rest of this Performance Bond.

IN WITNESS WHEREOF

EXECUTED for and on behalf of **[THE SURETY]**
at

on by:

Director/Authorised Signatory _____

Full Name _____

Witness Signature _____

Full Name _____

Address _____

_____

TIE00899939_1106

EXECUTED for and on behalf of **THE CLIENT**
at

on by:

Director/Authorised Signatory _____

Full Name _____

Witness Signature _____

Full Name _____

Address _____

_____

TIE00899939_1107

APPENDIX 1

DEMAND NOTICE

[date]

SURETY
[Address]
Attention: [Responsible Officer]

Dear Sirs

Performance Bond [◆] [Ref: ◆]
Edinburgh Tram Network - Construcciones y Auxiliar de Ferrocarriles S.A.

This is our formal demand for payment pursuant to Clause 1 of the above instrument issued by you in our favour for the amount of £2.787,951. Please pay the sum of £[◆] forthwith by electronic transfer to [◆ ***bank account details***].

We hereby certify that Construcciones y Auxiliar de Ferrocarriles S.A. (CAF) has failed to [◆ *describe default*] and has failed to rectify that default as at the date of this Demand. In accordance with Clause 2 of the Performance Bond, we attach a certified copy of the relevant default notice.

Yours faithfully,

_____

_____
Director and authorised signatory
for and on behalf of the Client

[redacted]

Director/Authorised Signatory
tie LIMITED

[redacted]

Director/Authorised Signatory
CONSTRUCCIONES Y AUXILIAR DE FERROCARRILES S.A. (CAF)

This is Schedule 11 referred to in the foregoing Tram Supply Agreement between tie Limited and Construcciones Y Auxiliar de Ferrocarriles S.A. (CAF)

SCHEDULE 11

REQUIRED INSURANCES

Part 1

Required Insurances

1 PROPERTY DAMAGE AND BUSINESS INTERRUPTION INSURANCE – PREMISES RISKS

Insured Parties:	The Tram Supplier any Tram Supplier Party each for its respective rights and interests
Coverage:	All risks of physical loss, destruction or damage to the Insured Property from any causes not otherwise excluded. <u>Insured Property</u> All real and personal property used by the Insured Parties in connection with the activities forming the subject of this Agreement including but not limited to – Buildings Contents including improvements and alterations Machinery, plant, tools and equipment Stock including raw materials, work in progress and finished goods <u>Business Interruption</u> Loss of gross profit or revenue and increased costs of working following loss or destruction of or damage to property used by the Insured Parties in connection with the activities forming the subject of this Agreement
Limit of Indemnity:	The full replacement value of the Insured Property at the time of reinstatement The amount of gross profit or revenue for the maximum indemnity period First loss basis will be considered
Period of Insurance:	From the earlier or the Effective Date or the commencement of the activities forming the subject of this Agreement until completion of the works specified in the Agreement including the period of any defect period or extended warranty period or the expiry of the maximum indemnity period if later.
Territorial Limits:	Anywhere within Europe including whilst in transit by road or rail

TIE00899939_1109

Exclusions:	loss of any of the Insured Property by theft or disappearance when the loss is revealed only in the course of an inventory undertaking the cost of making good wear and tear, gradual deterioration, etc. but not resulting damage war, invasion, acts of foreign enemies, hostilities, civil war, rebellion, revolution, insurrection or military or usurped power nuclear risks sonic bangs
Extensions:	The insurance must include the following minimum extensions: professional fees including surveyors', consulting engineers' and legal fees removal of debris temporary repairs automatic reinstatement of sum insured local authority Clause including European Union, railway inspectorate or Health and Safety Executive full value terrorism cover within Great Britain off-site storage property at supplier's premises waiver of subrogation between insured parties non-invalidation utilities/suppliers/customers/property stored extensions denial of access extension
Maximum Permitted Deductible:	GBP 40,000 each and every occurrence or all occurrences attributable to one source or original cause

2. PROPERTY DAMAGE INSURANCE – MARINE CARGO

Insured Parties:	**tie** The Tram Supplier any Tram Supplier Party The Client (if not **tie** or Infraco) any Client Party the Infraco, each for its respective rights and interests
Coverage:	Marine Cargo - All risks of physical loss, destruction or damage to the Insured Property from any causes not otherwise excluded. Cover to include mechanical or electrical breakdown. <u>Insured Property</u> Trams including all works, materials, equipment, components, parts, consumables, furnishing and Spare Parts
Limit of Indemnity:	The full replacement value of the Insured Property at the time of reinstatement, including all necessary retooling costs
Period of Insurance:	From the earlier or the Effective Date or the commencement of the activities forming the subject of this Agreement until completion of the activities specified in the Agreement including the period of any defect period or extended warranty period or until the delivery of all items under the Agreement which are subject to marine transit.
Territorial Limits:	By whichever routes required to effect delivery
Extensions:	Institute Cargo Clauses "A" CL.252 dated 1/1/82 Unpacked/unpainted steelwork and non-containerised cargo on deck Excluding rust, oxidation and discolouration, unless caused by peril recoverable under Institute Cargo Clause "C" No Deck Cargo Clause exclusion Institute War Clauses (Cargo) CL.255 dated 1/1/82 Institute Strikes Clauses (Cargo) CL.256 dated 1/1/82 Institute Radioactive Contamination Exclusion Clause CL.356 dated 1/10/90 Institute Replacement Clause CL.161 dated 1/1/94 Institute Classification Clause CL.354 dated 1/8/97

TIE00899939_1111

	Institute Marine Policy General Provision (Cargo) CL.269 dated 1/10/82
	Paramount War Clause
Maximum Permitted Deductible:	GBP 40,000 each and every occurrence or all occurrences attributable to one source or original cause

TIE00899939_1112

3 PUBLIC AND PRODUCTS LIABILITY INSURANCE

To be retained to cover liability risks not insured by the OCIP i.e. Tram Supplier's own premises risks

Insured Parties:	**tie** The Tram Supplier Any Tram Supplier Party Any party forming the Client should the Client not be **tie** or the Infraco Any Client Party The Infraco each for its respective rights and interests.
Coverage:	To indemnify the insured parties against legal liability for damages or compensation arising out of bodily injury including death, illness, disease and psychiatric damage and loss of or damage to physical property including obstruction, interference, loss of amenities, nuisance, trespass, stoppage of traffic, infringement of light, easement or quasi easement, or any like cause happening during the Period of Insurance and arising out of or in connection with the activities of the parties in respect of the works forming the subject of the Agreement.
Limit of Indemnity:	£80,000,000 any one occurrence/unlimited in the aggregate (other than in respect of sudden and accidental pollution which shall be in the aggregate),
Period of Insurance:	From the earlier or the Effective Date or the commencement of the activities forming the subject of this Agreement until completion of the activities specified in the Agreement including the period of any defect period or extended warranty period.
Territorial Limits and Jurisdiction:	Worldwide
Exclusions:	fines, penalties, punitive or exemplary damages. war, invasion, acts of foreign enemies, hostilities (whether declared or not), civil war, rebellion, revolution, insurrection of military or usurped power. nuclear risks seepage, pollution or contamination unless caused by a sudden, unintended and unexpected happening. professional indemnity, but not excluding property damage or bodily injury.
Extensions:	cross liabilities clause claimants' and defence costs and expenses in addition to limits of

indemnity

waiver of subrogation between insured parties

Health and Safety at Work Act Clause

the Insured includes the respective officers, directors, agents, servants and employees of an insured party

contractual liability clause

non invalidation-non-vitiation clause

cover is to be primary with no contribution with any other policies effected by or on behalf of the insured parties

Defective Premises Act liability

Data Protection Act liability

Maximum Permitted Deductible: GBP 25.000 each and every occurrence or all occurrences attributable to one source or original cause in respect of property damage (personal injury claims will be paid in full)

4. ERRORS AND OMISSIONS INSURANCE

Insured Parties: The Tram Supplier including any Tram Supplier Party

Coverage: To indemnify the Insured Parties against legal liability for damages or compensation made against them during the Period of Insurance arising out of or in consequence of or as a result of any act, error, or omission by the Insured Parties or the designer, their subcontractors and consultants in the performance of their professional activities and duties in connection with the activities forming the subject of this Agreement

Limit of Indemnity: Minimum GBP 8,000,000 on an each and every occurrence basis and in the aggregate during each twelve month Period of Insurance subject to one reinstatement of the limit of indemnity for each twelve month Period of Insurance.

Period of Insurance: From the Effective Date for twelve months and thereafter each further twelve month period until the earlier of twelve years from the completion of the activities forming the subject of this Agreement including any defect period or extended warranty period or twelve years from the date of termination of this Agreement.

Extensions: The insurance must include the following minimum extensions:

Libel or slander

Dishonesty of employees

TIE00899939_1114

Innocent non-disclosure

Liability for acts of specialist designers, consultants, sub-consultants and sub-contractors of any tier employed by the Insured

Breach of intellectual property rights

Loss of documents

Waiver of subrogation between Insured Parties

Indemnity to tie

Inclusion of directors, officers, partners and employees as Insured Parties

Maximum Permitted Deductible: GBP 25,000

5. EMPLOYERS' LIABILITY INSURANCE

Insured Party: The Tram Supplier and any Tram Supplier Party

Coverage: To indemnify the Insured Party against legal liability for damages or compensation arising out of bodily injury including death, illness, disease and psychiatric damage sustained by any employee arising out of and in the course of the employee's employment caused during the Period of Insurance.

Limit of Liability Minimum limit of indemnity of GBP10,000,000 any one occurrence or series of occurrences arising from one original cause or event, unlimited during the Period of Insurance.

Period of Insurance: From the Effective Date for twelve months and thereafter each further twelve month period until the earlier of the end of the defect period or extended warranty period or the date of termination of this Agreement.

Minimum Extensions The insurance must include the following minimum extensions:

Contractual liability

Claimant's and defence costs and expenses

Indemnity to principals

Cross liabilities

Inclusion of directors, officers, partners and employees as Insured Parties

Health and Safety legislation prosecution costs including costs of an appeal

Unsatisfied court judgements

TIE00899939_1115

	Compensation for court attendance
	Definition of employee to include as a minimum persons under a contract of service or apprenticeship, labour only subcontractors, self-employed persons, labour masters or persons supplied by them, operators and drivers of hired in plant
Maximum Permitted Deductible:	NIL

6. COMPREHENSIVE MOTOR INSURANCE

Insured Party:	The Tram Supplier
	tie or the Client (if not **tie**)
Coverage:	Comprehensive in respect of loss or damage to Own Vehicles.
	Legal Liability for death, injury, illness or disease or loss of or damage to Third Party Property.
Limit of Liability	Own Damage - Market Value/Cost of Repairs
	Third Party: Bodily Injury - Unlimited.
	Property Damage by Cars £20,000,000 any one occurrence
	Property Damage by Commercial Vehicles:
	- £5,000,000 any one occurrence
	- unlimited during the Period of Insurance
Period of Insurance:	From the Effective Date for twelve months and thereafter each further twelve month period until the expiry or earlier termination of this Agreement.
Minimum Extensions	The insurance must include the following minimum extensions:
	Contingent motor liability
	Passenger indemnity and negligence of passengers
	Occasional business use by employees
	Unauthorised movement
	Indemnity to principals
	Unauthorised use by employees
Maximum Permitted	GBP 25,000 in respect of own damage

TIE00899939_1116

Deductible: GBP NIL in respect of third party liability

7. DIRECTORS' & OFFICERS' LIABILITY

Insured Party:	The Tram Supplier (Insured Organisation) The Directors and Officers of the Tram Supplier (insured Persons)
Coverage:	A – Directors' & Officers' Liability To pay on behalf of each Insured Person the loss to the extent they are not indemnified by the Insured Organisation B – Corporate Reimbursement To pay on behalf of the Insured Organisation the loss to the extent the Insured Organisation has indemnified the Insured Person
Limit of Liability	GBP 10,000,000 any once occurrence and in the aggregate during any twelve month Period of Insurance
Period of Insurance:	From the Effective Date for twelve months and thereafter each further twelve month period until the expiry or earlier termination of this Agreement.
Minimum Extensions	The insurance must include the following minimum extensions: Defence costs in respect of pollution and contamination Outside directorships Provision for run-off cover and extended claim reporting period on expiry Bilateral discovery period
Exclusions	No insured versus insured exclusion in respect of claims outside the United States of America Bodily injury and property damage – "for" language to be used
Maximum Permitted Deductible:	A - GBP NIL in respect of Directors' & Officers' liability B - GBP 25,000 in respect of Corporate Reimbursement

TIE00899939_1118

Part 2

BROKER'S LETTER OF UNDERTAKING

To: **tie Limited]**

Dear Sirs

We confirm in our capacity as insurance brokers that the Required Insurances specified in Clause 40 (*Required Insurances*) and Schedule 11 *(Required Insurances)* of the Tram Supply Agreement dated ◆ between Construcciones y Auxiliar de Ferrocarriles S.A. (CAF) (the "**Tram Supplier**") and Client as defined therein ("**Agreement**") are, as at the date hereof, in effect in respect of the risks set out in the attached cover notes.

We have arranged the Required Insurances on the basis of the information and instructions given by the Tram Supplier. We have not made any particular or special enquiries regarding the Required Insurances beyond those that we would normally make in the ordinary course of arranging the insurances on behalf of our insurance broking clients.

The confirmations set out in this letter are given by reference to our state of knowledge at the date hereof.

Pursuant to instructions received from the Tram Supplier, we hereby undertake in respect of the interests of the Tram Supplier and the Client in the Required Insurances referred to in the attached cover notes:

1. to use reasonable endeavours to have endorsed on each and every policy evidencing the Required Insurances when the same is issued, endorsements substantially in the form set out in Schedule 11 (*Required Insurances*) of the Agreement;

2. to advise the Client:

   2.1 promptly after receiving notice of any insurer's cancellation or suspension of any of the Required Insurances or receiving notice of the intended cancellation or suspension of any of the Required Insurances;

   2.2 promptly upon our receipt from the Tram Supplier of any notice of any changes proposed to be made to the Required Insurances which, if effected, would result in a material reduction in limits or coverage (including in respect of extensions of cover) or in an increase in deductibles, exclusions or exceptions;

   2.3 of any default in the payment of any premium for any of the Required Insurances;

TIE00899939_1119

2.4 at least twenty days prior to the expiry of any of the Required Insurances if we have not received written renewal instructions from the Tram Supplier or if we receive written instructions to renew, to advise the Client of the details thereof; and

2.5 on receipt of notice of any act or omission of the Tram Supplier or any Sub-Contractor which will invalidate or render unenforceable in whole or in part, any of the Required Insurances;

3. no later than 10 days (in respect of certificates) and as soon as reasonably practicable in respect of policies and other documents, to supply you and/or your insurance advisors (or your or their authorised representative) copies of all placing slips, certificates, cover notes, renewal receipts and confirmations of renewal and payment of premiums and all policy documents (or confirmation of the terms of such policy documents where such policy documents cannot be made available) in respect of the Required Insurances, or upon request, to make available to you the originals of any or all such documents held by us;

4. to disclose to the insurers any fact, change of circumstance or occurrence is material to the risks insured against under the Required Insurances;

5. to treat as confidential all information in relation to the Required Insurances supplied to us by the Tram Supplier or any Sub-Contractor or the Client and not to disclose, without the written consent of the Client, such information to any third party other than the insurers under the Required Insurances, unless required to do so by law or any regulatory authority; and

6. to notify the Client as soon as reasonably practicable prior to our ceasing to act as brokers to the Tram Supplier, unless impracticable because of circumstances beyond our control, in which case we shall notify the Client as soon as reasonably practicable upon becoming aware that we shall cease, or have ceased, so to act.

Where insurers wish any of the Required Insurances to be cancelled for reasons of non-payment of premium, we will request those insurers to give you a reasonable opportunity of paying such amounts outstanding before issuing notice of cancellation on behalf of such insurers.

The above undertakings are given subject to our continuing appointment for the time being as insurance brokers to the Tram Supplier in relation to the Required Insurances concerned and the monitoring and handling of claims in relation to the Tram Supplier, and our obligations set out in this letter shall automatically cease upon termination of our appointment.

For the avoidance of doubt all undertakings and other confirmations given in this letter relate solely to the Required Insurances. They do not apply to any other insurances and nothing in this letter should

TIE00899939_1120

be taken as providing any undertakings or confirmations in relation to any other such insurance that ought to have been placed or may at some future date be placed by other brokers.

This letter is given by us on the instructions of the Tram Supplier and with the Tram Supplier's full knowledge and consent as to its terms as evidenced by the Tram Supplier's signature below.

This letter shall be governed by and shall be construed in accordance with Scots Law and any dispute as to its terms shall be submitted to the exclusive jurisdiction of the courts of Scotland.

Yours faithfully

.....
For and on behalf of (Insurance Broker)

.....
For and on behalf of (The Tram Supplier

TIE00899939_1121

Part 3

Insurance Questionnaire

ALL CLASSES OF REQUIRED INSURANCES	
Do your current insurance policies comply with the full scope of cover required for each class of Required Insurance as detailed in the Schedules? **If NO, please identify the class of Required Insurance and provide full details**	Yes, regarding PD/BI pre-delivery risks. Mainly yes regarding PD/BI premises risks, but there are some clauses which are not known in our market and we should need to have more information: **Under the Property Damaged** - expediting expenses - local authority clause including EU, railway inspectorate or health and safety executive - full value terrorism cover within Great Britain. To be bought locally - free issue materials - Promoter's clauses including non-vitiation/non-invalidation and severability of interest clause on terms no more restrictive than set out in the agreement - Damaged to insured property caused by emergency braking - No condition of average - Property or replacement of undamaged property to achieve compatibility **Under the Liability** - Health and safety at work act clause - Non vitiation-non invalidation clause - Defective premises act liability Data protection act liability (this clause is not provided from the Spanish insurers, It is not under the liability wordings)
Where your current insurance policies do not comply with the full scope of the Required Insurances	
(a) can your policies be amended or extended and if so please provide cost implications, or	**No, in respect to Professional liability**
(b) please provide reasons why the full scope of	Guarantees and limit required are

insurance as detailed in the Schedules will not be carried	wider than the coverage provided under the liability program. We think that the covered CAF actually has, is enough for the risk CAF has regarding this type of contract.
1.0 PROPERTY DAMAGE – PRE-DELIVERY RISKS (ERECTION ?)	
1.1 Name and Address of Insurers	ZURICH
1.2 Policy Number(s)	9404620487 AND 9511620008
1.3 Renewal Date	JANUARY 1st
1.4 Limit of Indemnity	9404620487: £2.023.500 PER CLAIM 9511620008: £4.047.000 PER CLAIM
1.5 What are the territorial limits of the policy?	WORLDWIDE
1.6 What cover applies in respect of defective design, materials or workmanship?	Need clarification to this question
1.7 Are testing and commissioning risks including breakdown included?	YES
1.8 Will cover apply whilst the trams are in use on road and highway, e.g. during trial running or driver training??	YES
1.9 What excesses apply?	£ 8 944
2.0 PROPERTY DAMAGE AND BUSINESS INTERRUPTION – PREMISES RISKS	
2.1 Name and Address of Insurers	ZURICH
2.2 Policy Number(s)	9831347910
2.3 Renewal Date	JANUARY 1st
2.4 Limit of Indemnity	£ 103.217.472
2.5 Does the policy include the full range of extensions specified in the schedule of required insurances? If not, please advise which are not covered.	YES
2.6 What excesses apply?	£ 10 119,36 · PROPERTY DAMAGE 48h BUSINESS INTERRUPTION
3.0 PROPERTY DAMAGE – MARINE CARGO	
3.1 Name and Address of Insurers	ZURICH
3.2 Policy Number(s)	984631877-3
3.3 Renewal Date	MARCH 1st
3.4 Limit of Indemnity	£ 4 864 592 (EXPORT) £ 2 432 296 (IMPORT)
3.5 Details of the Institute clauses which apply to your policy.	ICC (A)
3.6 Full details of all warranties and	

limitations which apply to your policy	
3.7 What excesses apply?	£ 810,76
4.0 PUBLIC AND PRODUCTS LIABILITY	
4.1 Name and Address of Insurers	ZURICH
4.2 Policy Number(s)	458323
4.3 Renewal Date	JANUARY 1st
4.4 Limit of Indemnity in respect of (please state whether any one occurrence or in the aggregate)	£ 80.954.880 PER CLAIM
a. Public Liability	£ 80.954.880 PER CLAIM
b. Products Liability	£ 80.954.880 PER CLAIM AND AGGREGATE
c. Subsidence, collapse, vibration or removal or weakening of support	CLAUSED NOT KNOWN
d. Fire and explosion	£ 80.954.880 PER CLAIM
e. Pollution	£ 80.954.880 PER CLAIM
f. Any other "inner" limit	£ 8.095.448 PER CLAIM – TENANT'S LIABILITY
4.5 Is the policy subject to a heat warranty or condition of any sort and/or any height or depth restrictions? If so attach copies.	NO
4.6 Is Contractual Liability included?	YES, OVER THE LEGAL LIABILITY
4.7 Does the policy include liability in respect of damage to premises temporarily occupied for the performance of works therein or thereon?	YES
4.8 Does the policy include a cross liability provision and a General Indemnity to Principals/Main Contractors Clause?	YES
4.9 What limitations apply in respect of cover for loss or damage due to defective design, workmanship or materials?	GOOD LOCAL STANDARD
4.10 What excesses are applicable?	£ 10.119,36
4.11 Is the policy extended to include financial loss?	YES (If yes state limit . £ 1 349248)
4.12 Does the policy include liability for the acts of subcontractors?	YES
4.13 Does the policy respond to judgements made outside UK?	YES
4.14 Is the cover subject to any material exclusions or limitations? (If YES please supply copies thereof?	NO
4.15 Have you ever undertaken or are you currently undertaking work on behalf of Network Rail or British Airports Authority?	

(If YES please state which or both?	
4.16 Does your policy extend to include the minimum insurance requirements of either Network Rail or British Airports Authority? (If YES please state which or both)	
5.0 PROFESSIONAL INDEMNITY – COVERED UNDER THE GENERAL LIABILITY POLICY	
5.1 Name and Address of Insurers	SAME AS LIABILITY POLICE
5.2 Policy Number(s)	SAME AS LIABILITY POLICE
5.3 Renewal Date	SAME AS LIABILITY POLICE
5.4 Limit of Indemnity	i. any one event £ 8 095488 ii. in the aggregate £ 8 095 488
5.5 Scope of professional duties insured as stated in the policy.	CLAIMS DUE TO PROFESSIONAL LIABILITY MADE BY TECHNICAL & QUALIFIED SPECIALIST WORKING ON BEHALF OF CAF
5.6 What excess(es) are applicable?	£ 10 119.36
5.7 Is cover included for sub-consultants?	NO
5.8 Is cover included for the costs of mitigation of loss	YES
5.9 Does the policy include a General Indemnity to Principals/Main Contractors Clause?	NO
5.10 Is cover subject to any material exclusions or limitations? (If YES please supply copies thereof)	NO
5.11 Does the policy respond to judgements made outside UK	YES
6.0 EMPLOYERS' LIABILITY – NO APPLICABLE IN SPAIN (SOCIAL SECURITY)	
6.1 Name and Address of Insurers	
6.2 Policy Number(s)	
6.3 Renewal Date	
6.4 Limit of Indemnity	£
6.5 Is the policy subject to a heat warranty or condition of any sort and/or any height or depth restrictions? If so attach copies.	YES/NO
6.6 Is Contractual Liability included?	
6.7 What is the definition of "employee"?	
6.8 Does the policy include a cross liability provision and a General Indemnity to Principals/Main Contractors Clause?	
6.9 Does the policy respond to judgements made outside UK?	
7.0 COMPREHENSIVE MOTOR INSURANCE – NOT APPLICABLE	

7.1	Name and Address of Insurers	
7.2	Policy Number(s)	
7.3	Renewal Date	
7.4	Limits of Indemnity in respect of (Please state whether any one occurrence or in the aggregate)	
	a. Third Party Property Damage	£
	b. Third Party Bodily Injury (if any)	£
7.5	Is the policy subject to a Deductible or excess? If so please provide details	
7.6	Are there any restrictions on usage or types of drivers? If so please provide details.	
8.0	DIRECTORS' and OFFICERS' LIABILITY INSURANCE	
8.1	Name and Address of Insurers	CHUBB
8.2	Policy Number(s)	82001331
8.3	Renewal Date	APRIL 10TH
8.4	Limits of Indemnity (Please state whether any one occurrence or in the aggregate)	£ 10.792.000 PER CLAIM
8.5	Is the policy subject to a Deductible or excess? If so please provide details.	£ 53.960 IN U.S.A.
8.6	Is cover subject to any material exclusions or limitations? If YES so please provide details.	
8.7	Please confirm what the provisions of your policy are in respect of – Extended reporting period Bodily injury and property damage exclusion Insured versus Insured claims	
9.0	SELF –INSURANCE ARRANGEMENTS – NOT APPLICABLE	
9.1	Please advise if any of the above classes of business are completely self-insured and provide details of the arrangements (self-insurance funds, captive insurers etc)	
9.2	Please advise if significant elements or levels of the covers required are self-insured and provide details of the arrangements	

DECLARATION:

We confirm that the foregoing details are accurate and that the above policies are subject to no special terms, conditions and exceptions other than those referred to above. We a so confirm that all premiums due to date have been paid.

Signed.....

Position.....INSURANCE BROKER - CAF.....

Name .....JUAN MAZARRASA.....

Date.....2006/9/26.....

For and on behalf of

.....AON GIL Y CARVAJAL.....

.....

.....

This form should be completed by your Insurers or your Registered Insurance Brokers ONLY.

The above information is agreed on behalf of the Candidate by the Candidate's Authorised Representative:

Name.....Ignacio Escofet.....

Signed.....[redacted].....

For and on behalf of.....

Date.....27 / Sept. / 2006.....

AON Aon Gil y Carvajal, Correduría de Seguros, Sociedad Unipersonal

Part 4

CONSTRUCTION OWNER CONTROLLED INSURANCE

SUMMARY OF COVER

This document is a summary of the cover arranged. For full details of cover reference must be made to the policy.

INSURED: **Sections 1 – Construction All Risks and Section 2 – Third Party Liability**

(i) **tie** Limited as Principal

(ii) The Main Contractors as declared under the MUDFA, Infraco and Tramco contracts (Tram Supply and Tram Maintenance)

(iii) Trade Contractors, Co-contractors and/or Sub-Contractors of any tier and any other Contractors including Advance Works Contractors and the maintenance contractors

(iv) Architects and/or Engineers and/or Suppliers and/or Consultants not forming part of (ii) or (iii) above as regards their on-site activities only

(v) Local authorities and utility providers including private utility owners as required

(vi) Transdev Edinburgh Tram Limited

(vii) Transport Edinburgh Limited (TEL)

(viii) Any other party having an insurable interest (and not mentioned above) to the extent that the Insured (i) is required by contract or agreement to provide insurance to such parties

(ix) The Scottish Ministers/Scottish Executive, Transport Scotland and City of Edinburgh Council

(x) Network Rail Infrastructure Ltd in respect of the Asset Protection Agreement only

Section 3 – Delay in Start Up

Insured (i) (vi) and (vii) above.

PERIOD: From: 23rd July 2007 To: 25th January 2011

plus the balance of the maintenance/defects liability period thereafter

INTEREST: All work including design, engineering, procurement, demolition, fabrication, construction, erection, installation, testing, commissioning (including trial running of trams) and defects maintenance including all ancillary and associated works and activities

<u>Section 1 – Construction All Risks</u>

TIE00899939_1128

- Contract works whether permanent or temporary
- Property or goods the property of the Insured or for which they may be responsible for in connection with the works
- Plant, equipment, temporary buildings, camps and contents owned, leased or hired by the Insured (insured sub (ii), (iii) and (iv) are excluded) *(note - no items currently insured under this head of cover)*

Section 2 – Third Party Liability

To indemnify the Insured against all sums (including claimants' costs and expenses) arising out of:

- death or bodily injury to or illness or disease or psychiatric damage suffered by any person, invasion of privacy, wrongful arrest, libel and slander
- loss or damage to physical property;
- obstruction, loss of amenities, nuisance, trespass, stoppage of traffic, infringement of any easement or right of air, light, water or way or any like cause

happening or consequent upon a cause occurring during the Period of Insurance and arising out of or in connection with the Edinburgh Tram Network Construction Phase

Section 3 – Delayed Start Up

To indemnify the Insured (i), (vi) and (vii) against loss of

- anticipated gross revenue
- standing charges
- increased costs or working

following an indemnifiable loss under Section 1

SUMS INSURED /LIMITS OF INDEMNITY:

Section 1 – Construction All Risks

Estimated Contract Value £341.9m for 1a.

Cover for MUDFA applies in respect 1a and 1b areas.

Existing Structures –limit £6,000,000 any one occurrence

Section 2 – Third Party Liability

£155m any one occurrence

£155m any one occurrence and in the aggregate during the Period of Insurance in respect of products liability

£155m any one occurrence and in the aggregate during the Period of Insurance in

TIE00899939_1129

respect of pollution or contamination

Unlimited liability for bodily injury as required under Road Traffic Acts

Section 3 – Delayed Start Up

£24m - To cover loss of revenue resulting from delay in commencement of passenger operations caused by insured damage to the Property Insured under Section 1

Maximum indemnity period 24 months

Additional increase in cost of working – Limit £250,000

EXCESS:

Section 1 Construction All Risks

£20,000 each and every occurrence and/or series of occurrences increasing to

£40,000 each and every occurrence in respect of storm, tempest, flood, earthquake, water damage, subsidence, collapse, landslip, frost and claims arising out of maintenance or testing and commissioning activities

£250,000 each and every occurrence in respect of LEG 3 (design) claims

Section 2 Third Party Liability

£10,000 each and every occurrence and/or series of occurrences in respect of property damage and bodily injury

Section 3 Delayed Start Up

60 days aggregate time excess

TERRITORIAL LIMITS:

Anywhere in the European Union (including inland transits and transits by ro/ro ferries and off-site storage) but worldwide excluding the USA/Canada in respect of Section 2

CONDITIONS:

Section 1 Construction All Risks

- Full (Guarantee) maintenance for first 12 months, followed by 12 months extended maintenance
- Defective design, materials and/or workmanship LEG 3
- Professional fees clause – Limit £1,000,000 any one occurrence
- Debris removal clause – Limit 15% of loss and a maximum of £1,000,000 any one occurrence
- 72 hour clause – storm, tempest, flood, earthquake, riot, civil commotion
- Principal supplied materials clause
- Automatic increase clause (25%)
- Expediting expenses – Limit 15% of loss and a maximum of £500,000 any

one occurrence

- Public, Local Authorities and European Union reinstatement clause – Limit £1,000,000 any one occurrence

- Preventive measures clause/minimisation of loss – Limit £250,000 any one occurrence and £500,000 in the aggregate during the Period of Insurance

- Waiver of subrogation

- Munitions clause

- Terrorism to full value within Great Britain – via Pool Re. Terrorism outside Great Britain excluded

- Plans and documents including computer records - £250,000 any one occurrence

- Marine 50/50 clause

- Payments on account

- Temporary repairs

- Automatic reinstatement of sum insured at additional premium to be agreed but not exceeding pro-rata and nil for losses not exceeding £1,000,000

- Non-vitiation and severability of interest clauses

- Off-site storage and specified suppliers - Limit £2,500,000 any one occurrence (limit does not apply to trams if stored in CAF depots or in Edinburgh worksite

- Transit by road, rail, inland waterway or sea (roll on/roll off ferries only) including during loading/unloading, transhipments and storage en route – Limit £2,000,000 any one occurrence

- Undamaged foundations clause

- Testing and Commissioning of the Works

- Testing, commissioning and trial running of trams for passenger service – 4 months limit per tram. Excludes testing, commissioning and trial running outside the United Kingdom

- Recovery of immobilised plant

- Plant and Hired in Plant / Continuing hire charges / Negligent breakdown of hired-in plant – Excludes first 48 hours of hire charges – Limit £1,000,000 any one occurrence

- Existing property and principal's property as required – Limit £6,000,000 any one occurrence

- Buildings due for demolition

- Fire Brigade Charges
- Emergency Braking
- Operator Error
- **Section 2 Third Party Liability**
- Contractual liability
- Claimants' and defence costs and expenses in addition to the Limit of Indemnity
- Personal representatives
- Cross liabilities clause
- Indemnity to Principals
- Unauthorised movement of vehicles
- Inclusion of directors, officers and employees as insured parties
- Waiver of subrogation
- Non-vitiation clauses
- Testing and Commissioning of the Works
- Testing and trial running for passenger service
- Motor Contingent Liability – limited to Great Britain, Northern Ireland, the Channel Islands, the Isle of Man
- Defective Premises Act Clause.
- Data Protection Act Defence Costs.
- Compensation for Court Attendance
- Sudden and Accidental Pollution Clause.
- Health and Safety at Work
- Munitions of War Clause.
- Consumer Protection Act
- Food Safety Act
- Project Supervisory Design and Construction Stage
- Wrongful Arrest

- Contracts (Rights of Third Parties) Act 1999
- JCT 21.2.1 – Limit £50m any one occurrence
- Pure financial loss – Limit £1m in the aggregate during the Period of Insurance, deductible £10,000, claims made basis of cover

Section 3 Delayed Start Up

- off-site storage and premises of specified suppliers where materials/plant/equipment for incorporation into the works is in the process of manufacture or being stored - damage by fire, lightning, explosion or aircraft only covered – Limit £2,500,000 any one occurrence
- prevention of access - Limit £2,500.000 any one occurrence, limited to damage to property within a radius of 1km of the site of the contract or within 1km of either side of the proposed tram route
- damage to the supply of water, gas, electricity or telecommunications systems to any site – Limit £1,000,000 any one occurrence
- delay caused by damage to the Insured Property during transit by road, rail or sea(roll on/roll off ferries only) including during loading/unloading, transhipments and storage en route – Limit £6,000,000 any one occurrence
- terrorism to full value – via Pool Re within Great Britain. Terrorism outside Great Britain is excluded
- non-vitiation and severability of interest clauses
- Including consequential losses arising from loss or damage to Constructional Plant and Equipment
- Professional Fees – Limit 15% of finally-agreed settlement or £500,000 any one occurrence whichever is the lower.

PRINCIPAL EXCLUSIONS:

Section 1 – Construction All Risks

- Consequential loss
- Wear and tear and corrosion but not consequent damage
- Inventory losses
- Claims deductibles
- Acts of fraud or theft committed by employees
- Building contractors and sub contractors plants, tools and equipment
- Liquidated damages
- War, invasion, acts of foreign enemies, hostilities, civil war, rebellion, revolution, insurrection or military or usurped power

TIE00899939_1133

- Nuclear risks
- Sonic bangs
- Design Exclusion LEG 3
- Aircraft or marine vessels
- Vehicles licensed for road use other than tool of trade risk (exclusion does not apply to trams during testing, commissioning and trial running
- Money
- Tyres by the application of brakes, punctures, cuts or bursts
- Suspension of work in excess of three months
- Normal upkeep or normal making good
- Electronic data exclusion – cover limited to physical damage caused by fire, explosion, collision, derailment
- Piling exclusions and restrictions
- Pre-existing defects in respect of existing structures

Section 2 – Third Party Liability

- Employers' Liability
- Liability arising out of the use of, ownership or possession of any motor vehicle in circumstances where the Road Traffic Acts require compulsory insurance or security. The exclusion does not apply to trams whilst undergoing testing, commissioning and trial running
- Liability arising out of the use of, ownership or possession of any aircraft or waterborne craft
- Asbestos exclusion (cover applies to bodily injury or damage to material property following accidental discovery of asbestos on a claims made basis – limit £1,000,000 in the aggregate during the Period of Insurance, deductible £10,000)
- Liquidated damages
- Fines, penalties, punitive or exemplary damages
- War, invasion, acts of foreign enemies, hostilities (whether declared or not), civil war, rebellion, revolution, insurrection or military or usurped power.
- Nuclear risks
- Seepage, pollution or contamination unless caused by sudden, unintended and unexpected happening.

- Professional indemnity, but not excluding personal or bodily injury or damage to tangible property.
- Liability arising out of performance warranties
- Property belonging to the Insured or in their care, custody or control
- Repairing or making good faulty, defective or incorrect workmanship, design or specification, materials, goods or other property supplied or installed or erected
- Excluding use of explosives or extent of cover to be agreed
- Product recall, product guarantee
- Terrorism
- Deductibles

Section 3 – Delay in Start Up

- Public authority delay
- Rectification of defects
- Non-availability of funds
- Modifications
- Costs incurred to reduce delay during Claims Deductible period
- Suspension, lapse or cancellation of licence after commencement of operations

[redacted]

Director/Authorised Signatory
tie LIMITED

[redacted]

Director/Authorised Signatory
CONSTRUCCIONES Y AUXILIAR DE FERROCARRILES S.A. (CAF)

SCHEDULE 12

CERTIFICATES

Part 1: Factory Acceptance Routine Test Certificate

FACTORY ACCEPTANCE ROUTINE TEST CERTIFICATE

This document is Applicable to Tram Number: ..... and certifies in accordance with Clause 28 that this tram has passed to the satisfaction of the authorised Tram Inspector the tests and inspections agreed/approved by tie and Infraco as being necessary for a tram to qualify for the issue of this Certificate. The necessary Test and Inspections are listed in Annex 1 to this Certificate.

Tram Inspector

Signature
.....

Name (in Block
Capitals).....

Original Certificate to be issued to : tie
Copies to be issued to : Infraco, Tramco, Tram Inspector

ANNEX 1
Schedule of Agreed Tests and Inspections

Pass **Fail**

FACTORY ACCEPTANCE ROUTINE TESTS

TIE00899939_1137

FACTORY ACCEPTANCE TYPE TEST CERTIFICATE

This document is Applicable to Tram Number: ..... and certifies in accordance with Clause 28 that this tram has passed to the satisfaction of the authorised Tram Inspector the tests and inspections agreed/approved by tie and Infraco as being necessary for a tram to qualify for the issue of this Certificate. The necessary Test and Inspections are listed in Annex 1 to this Certificate.

Tram Inspector

Signature
.....

Name (in Block
Capitals).....

Original Certificate to be issued to : tie
Copies to be issued to : Infraco, Tramco, Tram Inspector

ANNEX 1
Schedule of Agreed Tests and Inspections

	Pass	Fail
FACTORY ACCEPTANCE TYPE TESTS		

TIE00899939_1139

CERTIFICATE OF TRAM DELIEVRY

This document is Applicable to Tram Number: ..... and certifies in accordance with Clause 30 that this tram has passed to the satisfaction of the authorised Tram Inspector the tests and inspections agreed/approved by tie and Infraco as being necessary for a tram to qualify for the issue of this Certificate. The necessary Test and Inspections are listed in Annex 1 to this Certificate.

Tram Inspector

Signature
.....

Name (in Block
Capitals).....

Original Certificate to be issued to : tie
Copies to be issued to : Infraco, Tramco, Tram Inspector

ANNEX 1
Schedule of Agreed Tests and Inspections

Pass **Fail**

CERTIFICATE OF TRAM DELIVERY

TRAM SITE COMMISSIONING TYPE TEST CERTIFICATE

This document is Applicable to Tram Number: ..... and certifies in accordance with Clause 31 that this tram has passed to the satisfaction of the authorised Tram Inspector the tests and inspections agreed/approved by tie and Infraco as being necessary for a tram to qualify for the issue of this Certificate. The necessary Test and Inspections are listed in Annex 1 to this Certificate.

Tram Inspector

Signature
.....

Name (in Block
Capitals).....

Original Certificate to be issued to : tie
Copies to be issued to : Infraco, Tramco, Tram Inspector

ANNEX 1
Schedule of Agreed Tests and Inspections

Pass

Fail

TRAM SITE COMMISSIONING TYPE TESTS

TRAM SITE COMMISSIONING ROUTINE TEST CERTIFICATE

This document is Applicable to Tram Number: ..... and certifies in accordance with Clause 31 that this tram has passed to the satisfaction of the authorised Tram Inspector the tests and inspections agreed/approved by tie and Infraco as being necessary for a tram to qualify for the issue of this Certificate. The necessary Test and Inspections are listed in Annex 1 to this Certificate.

Tram Inspector

Signature
.....

Name (in Block
Capitals).....

Original Certificate to be issued to : tie
Copies to be issued to : Infraco, Tramco, Tram Inspector

ANNEX 1
Schedule of Agreed Tests and Inspections

Pass **Fail**

TRAM SITE COMMISSIONING ROUTINE TESTS

TRAM REJECTION CERTIFICATE

This document is Applicable to Tram Number: ..... and certifies in accordance with Clause 28/30/31 (delete if not applicable) that this tram has not passed to the satisfaction of the authorised Tram Inspector the tests and inspections agreed/approved by tie and Infraco as being necessary for a tram to qualify for the issue of a Factory Acceptance Routine Test/Factory Acceptance Type Test/Site commissioning Routine Test/Site commissioning Type Test Certificate or Certificate of Tram Delivery (delete if not applicable). The Test and Inspections which are deemed to have not met the Tram Inspector's requirements are identified in Annex 1 to this Certificate.

Tram Inspector

Signature .....

Name (in Block Capitals).....

Original Certificate to be issued to : tie
Copies to be issued to : Infraco, Tramco, Tram Inspector

ANNEX 1
Schedule of Agreed Tests and Inspections

	Pass	Fail
FACTORY ACCEPTANCE ROUTINE TEST CERTIFICATE		
FACTORY ACCEPTANCE TYPE TEST CERTIFICATE		
CERTIFICATE of TRAM DELIVERY		
TRAM SITE COMMISSIONING TYPE TEST CERTIFICATE		
TRAM SITE COMMISSIONING ROUTINE TEST CETIFICATE		

TIE00899939_1147

TRAM RELIABILITY CERTIFICATE

This document is Applicable to Tram Number: ..... and certifies in accordance with Clause 44 of the Tram Supply Agreement that this tram is Reliable to the satisfaction of the authorised Tram Inspector by operating for two consecutive Reporting Periods in passenger carrying service without being a Tram Maintainer Late Tram and that during the same two Reporting Periods it has travelled a distance in excess of 10000 kilometers. The necessary Test results are listed in Annex 1 to this Certificate including the agreed Exclusions that have been applied.

Tram Inspector

Signature
.....

Name (in Block
Capitals).....

Original Certificate to be issued to : tie
Copies to be issued to : Infraco, Tramco, Tram Inspector

ANNEX 1
Schedule of Agreed Tests and Inspections

(to be completed when necessary)

[redacted]

Director/Authorised Signatory
tie LIMITED

[redacted]

Director/Authorised Signatory
CONSTRUCCIONES Y AUXILIAR DE FERROCARRILES S.A. (CAF)

This is Schedule 13 referred to in the foregoing Tram Supply Agreement between tie Limited and Construcciones Y Auxiliar de Ferrocarriles S.A. (CAF)

SCHEDULE 13

DISPUTE RESOLUTION PROCEDURE

1. The Parties agree that this Schedule 13 (*Dispute Resolution Procedure*) shall have effect for the resolution of any Dispute.

2. Any Dispute shall, in the first instance, be referred to the Internal Resolution Procedure in accordance with paragraph 10.

3. Neither Party shall commence any court proceedings until the procedures in paragraphs 9 to 57.3 have been completed, under exception that the provisions of this Schedule 13 (*Dispute Resolution Procedure*) shall not apply so as to prevent either Party seeking an interim order, or interim relief, in the Scottish courts.

4. In the event that any court proceedings whatsoever are initiated by either Party against the other, the Parties agree that the Court of Session, Scotland, shall have exclusive jurisdiction.

5. Neither Party shall be entitled to suspend the performance of its undisputed obligations under this Agreement merely by reason of the reference of any Dispute to the Dispute Resolution Procedure contained in this Schedule 13 (*Dispute Resolution Procedure*).

6. Subject to the Tram Supplier's and the Client's discretionary rights set out in paragraphs 55 to paragraph 57.2 to require that a Dispute and a Related Dispute (as defined in paragraph 55) be dealt with together at an appropriate stage of the Dispute Resolution Procedure, the provisions of this Schedule 13 (*Dispute Resolution Procedure*) are mandatory and binding upon the Parties. For the avoidance of doubt, nothing in this Schedule Part 9 shall be intended to disapply section 80(2) and 79(2) of the Edinburgh Tram (Line One) Act 2006 and the Edinburgh Tram (Line Two) Act 2006 (together the "**Tram Acts**") respectively.

7. Except in relation to the matters provided for in paragraphs 14 to 54 and subject to the provisions of paragraph 9, in the event that either Party following the referral of any Dispute then pursues such Dispute under the Dispute Resolution Procedure, and in the event that such Party fails to observe any time limit or timescale provided for in this Schedule 13 (*Dispute Resolution Procedure*) in relation to the pursuit or progression of such Dispute, such Party shall, upon such failure occurring and upon the expiry of 90 days following written notification from the other Party requiring the first Party to pursue the Dispute Resolution Procedure, be deemed to have irrevocably waived any right to pursue or progress such Dispute any further. In that event, such Party shall be deemed to have elected not to have referred

TIE00899939_1150

such Dispute or to have withdrawn such Dispute from the Dispute Resolution Procedure and shall be deemed to have irrevocably waived any right to refer any Dispute arising from the same or substantially the same Dispute or similar circumstances to the Dispute Resolution Procedure and shall be liable for payment of the whole fees incurred by any mediator or adjudicator who has acted in respect of such Dispute. This paragraph 7 is without prejudice to the rights of either Party to raise in defence to any Dispute any defence (including, without prejudice to the foregoing generality, any defence of retention, compensation or set-off) which would otherwise be available to it.

8. Notwithstanding the provisions of paragraph 7, in the event that a Party who pursues any Dispute under the Dispute Resolution Procedure fails to observe any time limit or timescale provided for in this Schedule 13 (*Dispute Resolution Procedure*) in relation to the pursuit or progression of the Dispute or fails to take action following a notification from the other Party pursuant to paragraph 7 above, the other Party may elect to waive such failure, in which event the time limit or timescale to which such failure relates shall be extended at the discretion of such other Party and the Dispute shall progress in accordance with the Dispute Resolution Procedure, subject that all other time limits and timescales provided for in this Schedule 13 (*Dispute Resolution Procedure*) which are affected by such extension shall be deemed to have been extended to give effect to such extension of the time limit or timescale to which such failure relates.

Internal Resolution Procedure

9. The following procedure is the Internal Resolution Procedure referred to in paragraph 2:

9.1 In the event of any Dispute arising, the Tram Supplier's Representative and the Client's Representative shall seek to resolve the Dispute at a meeting to be convened within three Business Days of written notification by either Party to the other that it wishes to initiate the Internal Resolution Procedure in respect of that Dispute ("Notification"). Such Notification shall be given in accordance with the provisions of Clause 68 (*Notices*) of this Agreement.

9.2 If following the meeting referred to in paragraph 9.1, the Dispute is not resolved or in the event that a meeting has not been convened within 3 Business Days of pursuant to paragraph 9.1, each Party shall, before the expiry of the period of seven Business Days from Notification, serve, in accordance with the provisions of Clause 68 (*Notices*) of this Agreement, a written position paper ("**Position Paper**") upon the other Party. Each Party's Position Paper shall state in reasonable detail that Party's

TIE00899939_1151

position and required objectives in relation to the Dispute; any required redress, and, where possible, any comments on the other Party's position.

9.3 Upon such service of a Position Paper by the Party initiating or pursuing the Dispute, the Chief Executive (or equivalent) of the Tram Supplier and the Chief Executive (or equivalent) of the Client (or their respective deputies in the event of their unavailability) shall seek to resolve the Dispute by meeting in good faith to discuss and negotiate upon the Dispute without recourse to legal or other proceedings.

9.4 In the event that resolution of the Dispute is achieved by the Chief Executive (or equivalent) of the Tram Supplier and the Chief Executive (or equivalent) of the Client, the resolution shall be reduced to writing and, once it is signed by the duly authorised representatives of both Parties, shall be binding on the Parties.

9.5 Unless concluded by a written legally binding agreement, all discussions and negotiations connected with the Dispute shall be conducted in confidence and without prejudice to the rights of the Parties in any future legal or other proceedings. Nor may such matters be produced or relied upon in evidence in any such proceedings.

10. In the event that any Dispute is not resolved by the Internal Resolution Procedure within a period of twenty Business Days from Notification (or longer if so agreed by the Parties) then the following provisions of this paragraph 11 shall apply;

10.1 The Chief Executive (or equivalent) of the Tram Supplier and the Chief Executive (or equivalent) of the Client (or their respective deputies in the event of their unavailability) shall, within a further period of five Business Days, seek to agree that the Dispute shall be resolved by any one of the following procedures:

10.1.1 mediation in accordance with paragraphs 11 to 13; or

10.1.2 adjudication in accordance with paragraphs 14 to 54; or

10.1.3 litigation before the Court of Session, Scotland, in which event the Summons in any such litigation shall be signeted and served within ten Business Days of the date of expiry of the period of sixty Business Days following the conclusion of the internal resolution procedure under paragraphs 9 and 10.

In the event that the Chief Executive (or equivalent) of the Tram Supplier and the Chief Executive (or equivalent) of the Client (or their respective deputies in the event of their unavailability) are unable to agree that the Dispute be resolved by the

TIE00899939_1152

procedures described in paragraphs 10.1.1, 10.1.2 or 10.1.3, the Party initiating or pursuing the Dispute shall refer the Dispute to mediation (and thereafter adjudication, if necessary) in accordance with paragraphs 11 to 13 or in the case of a Related Dispute conjoined by either Party pursuant to paragraph 55 or where a Related Dispute has already been referred to the decision of an adjudicator to adjudication in accordance with Paragraphs 14 to 54 (without the need to first refer the Dispute to adjudication).

Mediation

11. The Parties shall attempt in good faith to resolve the Dispute by a procedure of mediation in accordance with the Centre for Effective Dispute Resolution mediation rules or Model Mediation Procedure in force at the commencement of the mediation, (or in the event that the Centre for Effective Dispute Resolution has ceased to exist as at the time of the commencement of the mediation, mediation rules or a model mediation procedure offered by any other body offering commercial mediation services which shall be selected by agreement between the Parties (failing such agreement by the Party referring the Dispute to mediation)). In the event that any provision of such mediation rules or model mediation procedure conflicts with any provision of this Schedule 13 (*Dispute Resolution Procedure*), the provisions of this Schedule 13 (*Dispute Resolution Procedure*) shall take precedence. In the event that any timescales contained in such mediation rules or model mediation procedure conflicts with the timescales referred to in this Schedule 13 (*Dispute Resolution Procedure*), the timescales contained in such mediation rules or model mediation procedure shall be amended accordingly, such that the timescales referred to in this Schedule 13 (*Dispute Resolution Procedure*) shall be adhered to.

12. In the event that resolution of the Dispute is achieved in consequence of such mediation procedure, such agreed resolution shall be recorded in writing and, once it is signed by the duly authorised representatives of both Parties, shall be binding on the Parties. Unless concluded by a written legally binding agreement, all discussions and negotiations (including written submissions made and documents produced in relation thereto) connected with the mediation procedure referred to in paragraph 11 shall be conducted in confidence and without prejudice to the rights of the Parties in any future legal or other proceedings. Nor may such matters be produced or relied upon in evidence in any such proceedings.

13. If any Dispute to which this Schedule 13 (*Dispute Resolution Procedure*) relates is not resolved by the mediation procedure referred to in paragraphs 11 and 12 within a period of 30 Business Days from the referral of the Dispute to mediation (or longer if so agreed by the

TIE00899939_1153

Parties), the mediation procedure shall be terminated and, unless the Party initiating or pursuing the Dispute withdraws the Dispute, the Dispute shall within sixty days of the termination of the mediation procedure, be referred to adjudication in accordance with paragraphs 14 to 54.

Adjudication

14. In the event that either Party refers a Dispute to adjudication in terms of paragraph 10.1.2 or 13, or exercises a statutory right available to it under the Housing Grants Construction and Regeneration Act 1996 to raise adjudication proceedings in relation to "construction operations" (within the meaning ascribed to that term by the Housing Grants, Construction and Regeneration Act 1996) which are not Authorised Works as defined in the Tram Acts, such adjudication shall be conducted in accordance with paragraphs 14 to 54, wherein any reference to "days" is a reference to calendar days.

15. Where a Related Dispute (as defined in paragraph 55) relates or is claimed by the other party to a Related Contract to relate to "construction operations" within the meaning ascribed to that term by the Housing Grants, Construction and Regeneration Act 1996 and where such other party to a Related Contract claims to exercise a statutory right available to it under the Housing Grants, Construction and Regeneration Act 1996, then reference of the Dispute arising under this Agreement to mediation shall not be a precondition to the commencement of adjudication proceedings. In the foregoing circumstances, the Tram Supplier or the Client shall be entitled to refer a Dispute at any time to adjudication in terms of paragraphs 14 to 54 hereof.

Notice of intention to seek adjudication

16. Either Party may give written notice (the "**Notice of Adjudication**") of its intention to refer the Dispute to adjudication and the Party giving such notice shall be the "**Referring Party**".

17. The Notice of Adjudication shall be given to the other Party and the Party receiving the Notice of Adjudication shall be the "**Responding Party**".

18. The Notice of Adjudication shall set out briefly:

    18.1 the nature and a brief description of the Dispute and of the parties involved;

    18.2 details of where and when the Dispute has arisen;

    18.3 the nature of the redress which is sought; and

TIE00899939_1154

18.4 the names and addresses of the Parties (including the addresses which the Parties have specified for the giving of notices).

19. The adjudicator selected to consider the Dispute shall be selected from one of the panels ("**Panels**") appointed by the Parties in accordance with the following:

19.1 there shall be three Panels, one in respect of legal matters, ("**Legal Panel**"), one in respect of construction matters and operational matters ("**Construction/Operational Panel**") and one in respect of financial matters ("**Financial Panel**").

19.2 each Panel shall be comprised of at least four members, who are listed in Schedule 14 (*Panels for the Dispute Resolution Procedure*) to the Agreement.

19.3 if any member of a Panel resigns or dies or becomes incapax or ill to the extent of being unable to reasonably discharge his duties as a member of the Panel, a replacement shall be appointed by the Parties as soon as practicable. Any such replacement shall be wholly independent of **tie**, any **tie** party, TEL, Transport Scotland, the Client, any Client Party, the Tram Supplier, any Tram Supplier Party, CEC or any Relevant Authority, any Approvals Body, the Tram Maintainer, any Tram Maintainer Party, the Infraco, any Infraco Party, the Operator or any equipment supplier or any party associated with the Edinburgh Tram Network, and any successor to or subsidiary or parent of any of the aforementioned parties. If the Parties are unable to agree on the identity of such replacement(s), the President or Vice President for the time being of The Chartered Institute of Arbitrators (Scottish Branch) or the Institution of Civil Engineers or the Law Society of Scotland shall appoint such replacement(s) within thirty days of any application for such appointment by either Party.

20. The Referring Party shall at the same time as giving the Notice of Adjudication to the Responding Party, send to each of the members of the relevant Panel a copy of the Notice of Adjudication and a request that each member of the relevant Panel advises both Parties within three days of the date of the Notice of Adjudication as to whether or not he is able and willing to act. The Referring Party shall (acting reasonably) be entitled to select which of the Panels is the relevant Panel in light of the subject matter of the Dispute. The Parties shall attempt to agree within two further days as to which one of the members of the relevant Panel who responded indicating that they are able and willing to act shall be requested to act as adjudicator. In the event that such agreement is reached, the Referring Party shall, within a further period of one day, request the member of the relevant Panel upon whom agreement has been reached to act as adjudicator. In the event that such agreement is not reached, the

TIE00899939_1155

Responding Party shall, within a further period of two days, select one of the members of the relevant Panel who responded indicating that they are able and willing to act and the Referring Party shall request that member to act as adjudicator.

21. If no member of the relevant Panel indicates that he is able and willing to act within three days of receiving a request to act as adjudicator, the Referring Party shall request the President or the Vice President for the time being of The Chartered Institute of Arbitrators (Scottish Branch) or the Institution of Civil Engineers or the Law Society of Scotland to select a person to act as adjudicator.

22. Any person appointed, requested or selected to act as adjudicator in accordance with paragraphs 19, 20, 21, 24 and 25 shall be a natural person acting in his personal capacity. A person appointed, requested or selected to act as an adjudicator shall be wholly independent of the **tie**, any **tie** Party, TEL, Transport Scotland, Client, any Client Party, the Tram Supplier, any Tram Supplier Party, City of Edinburgh Council or any Relevant Authority, any Approvals Body, the SDS Provider, the Tram Maintainer, any Tram Maintainer Party, the Infraco, any Infraco Party, the Operator or any equipment supplier or any party associated with the Edinburgh Tram Network, and any successor to or subsidiary or parent of any of the aforementioned parties.

23. The requests referred to in paragraphs 20 and 21 shall be accompanied by a copy of the Notice of Adjudication.

24. The Chartered Institute of Arbitrators (Scottish Branch) or the Institution of Civil Engineers or the Law Society of Scotland must communicate the selection of an adjudicator to the Referring Party within three days of receiving a request to do so.

25. If the Chartered Institute of Arbitrators (Scottish Branch) or the Institution of Civil Engineers or the Law Society of Scotland fails to comply with paragraph 24, the Referring Party may:

    25.1 agree with the other Party to the Dispute to request a specified person to act as adjudicator; or

    25.2 request any other adjudicator nominating body to select a person to act as adjudicator. An "adjudicator nominating body" shall mean a body (not being a natural person and not being a Party to the Dispute) which holds itself out publicly as a body which will select an adjudicator when requested to do so by a Referring Party.

26. The person requested to act as adjudicator in accordance with the provisions of paragraph 20 or 21 shall indicate whether or not he is willing to act within two days of receiving the request.

TIE00899939_1156

27. Where an adjudicator has been selected and appointed in accordance with paragraphs 19, 20 or 21 within seven days of the date of the Notice of Adjudication, then the Referring Party shall refer the Dispute in writing (the "**Referral**") to the adjudicator within that seven day period. Where an adjudicator has not been selected within and appointed within seven days of the Notice of Adjudication, then the Referral shall be made immediately upon such selection and appointment. Any failure on the part of the Referring Party to make the Referral within seven days of the date of the Notice of Adjudication shall not invalidate the decision of the adjudicator.

28. The Referral shall be accompanied by copies of, or relevant extracts from the Agreement and such other documents as the Referring Party intends to rely upon.

29. The Referring Party shall, at the same time as he sends to the adjudicator the documents referred to in paragraphs 27 and 28, send copies of those documents to the Responding Party.

30. The adjudicator may, with the consent of the parties to those Disputes, adjudicate at the same time on more than one Dispute under the Agreement.

31. The Parties may agree to extend the period within which the adjudicator may reach a decision in relation to all or any of these Disputes.

32. An adjudicator may resign at any time on giving notice in writing to the Parties.

33. An adjudicator must resign where the Dispute is the same or substantially the same as one which has previously been referred to adjudication, and a decision has been taken in that adjudication.

34. Where an adjudicator ceases to act under paragraph 32 or 33, or dies or becomes incapax or ill to the extent of being unable to reasonably discharge his duties:

    34.1 the Referring Party may serve a fresh notice in accordance with paragraphs 16 to 18 and shall in accordance with paragraphs 19 to 29 request an adjudicator to act; and

    34.2 if requested by the new adjudicator, the Parties shall supply him with copies of all documents which they had made available to the previous adjudicator.

35. The Parties to a Dispute may at any time agree to revoke the appointment of the adjudicator and in such circumstances the fees and expenses of that adjudicator shall, subject to paragraph 36, be determined and payable in accordance with paragraphs 52 and 53.

TIE00899939_1157

36. Where the revocation of the appointment of the adjudicator is due to the default or misconduct of the adjudicator, the Parties shall not be liable to pay the adjudicator's fees and expenses.

Powers of the Adjudicator

37. The adjudicator shall:

37.1 act impartially in carrying out his duties and shall do so in accordance with any relevant terms of the Agreement and shall reach his decision in accordance with Scots law; and

37.2 avoid incurring unnecessary expense.

38. The adjudicator may take the initiative in ascertaining the facts and the law necessary to determine the Dispute, and shall decide on the procedure to be followed in the adjudication. In particular, he may:

38.1 request either Party to supply him with such documents as he may reasonably require including, if he so directs, any written statement from either Party supporting or supplementing the Referral and any other documents given under paragraphs 28 and 29;

38.2 conduct the adjudication in the English language and decide whether a translation of any document is to be provided and, if so, by whom, by when, and at whose cost;

38.3 meet and question either Party and their representatives;

38.4 subject to obtaining any necessary consent from a third party or the Parties, make such site visits and inspections as he considers appropriate, whether accompanied by the Parties or not;

38.5 subject to obtaining any necessary consent from a third party or the Parties, procure the carrying out of any tests or experiments, and make directions as to the conditions for and responsibility for the cost of the same;

38.6 obtain and consider such representations and submissions as he requires, and, provided he has notified the Parties of his intention, appoint experts, assessors or legal advisers;

38.7 give directions as to the timetable for the adjudication, any deadlines, or limits as to the length of written documents or oral representations to be complied with; and

TIE00899939_1158

38.8 issue other directions relating to the conduct of the adjudication.

39. The Parties shall comply with any request or direction of the adjudicator in relation to the adjudication.

40. If, without showing sufficient cause, a Party fails to comply with any request, direction or timetable of the adjudicator made in accordance with his powers, fails to produce any document or written statement requested by the adjudicator, or in any other way fails to comply with a requirement under these provisions relating to the adjudication, the adjudicator may:

40.1 continue the adjudication in the absence of that Party or of the document or written statement requested;

40.2 draw such inferences from that failure to comply as may, in the adjudicator's opinion, be justified in the circumstances;

40.3 make a decision on the basis of the information before him, attaching such weight as he thinks fit to any evidence submitted to him outside any period he may have requested or directed;

40.4 disqualify any part or parts of that Party's submissions affected by the failure to comply; and

40.5 grant the other Party proper opportunity to consider and respond to any evidence or representation made late.

41. Subject to any agreement between the Parties to the contrary, either Party may be assisted by, or represented by, such advisers or representatives (whether legally qualified or not) as he considers appropriate.

42. The adjudicator shall consider any relevant information submitted to him by either Party and shall make available to them any information to be taken into account in reaching his decision.

43. The adjudicator and the Parties shall not disclose to any other person any information or document provided in connection with the adjudication which the Party supplying it has indicated is to be treated as confidential, except to the extent that disclosure is required by law or is necessary for the purposes of, or in connection with, the adjudication, or the information is already in the public domain.

TIE00899939_1159

Adjudicator's Decision

44. Unless otherwise agreed in accordance with paragraph 56.1 or 57.1 the adjudicator shall reach his decision not later than:

    44.1 twenty eight days after the date of the Referral as defined in paragraph 27;

    44.2 forty two days after the date of the Referral if the Referring Party so consents; or

    44.3 such period exceeding twenty eight days after the Referral as the Parties may, after the giving of that notice, agree.

45. Where the adjudicator fails, for any reason, to reach his decision in accordance with paragraph 44;

    45.1 either of the Parties to the Dispute may serve a fresh notice in accordance with paragraphs 16 to 18 and shall request an adjudicator to act in accordance with paragraphs 19 to 29; and

    45.2 if requested by the new adjudicator the Parties shall supply him with copies of all documents which they had made available to the previous adjudicator.

46. As soon as possible after he has reached a decision, the adjudicator shall deliver a copy of that decision to each of the Parties.

47. The adjudicator shall decide the matters in Dispute and may make a decision on different aspects of the Dispute at different times.

48. The adjudicator may take into account any other matters which the Parties agree should be within the scope of the adjudication or which are matters under the Agreement which he considers are necessarily connected with the Dispute and, in particular, he may

    48.1 open up, review and revise any decision taken or any notice certifying payment given by any person referred to in the Agreement, unless the Agreement states that the decision or notice certifying payment is final and conclusive;

    48.2 decide that any of the Parties to the Dispute is liable to make a payment under the Agreement (whether in sterling or some other currency) and, subject to the terms of the Agreement, when that payment is due and the final date for payment;

49. The adjudicator shall provide written reasons for his decision.

TIE00899939_1160

Effect of the Decision

50. In his decision, the adjudicator may, if he thinks fit, order either or both of the Parties to comply (forthwith) with his decision or any part of it. In the absence of any directions by the adjudicator relating to the time for performance of his decision, the Parties shall be required to comply with any decision of the adjudicator immediately on delivery of the decision to the Parties in accordance with paragraph 46.

51. The decision of the adjudicator shall be binding on the Parties, and they shall comply with it, until the Dispute is finally determined by legal proceedings or by agreement between the Parties.

52. The adjudicator shall be entitled to the payment of such reasonable amount as he may determine by way of fees and expenses incurred by him and the Parties shall be jointly and severally liable to pay that amount to the adjudicator.

53. Without prejudice to the right of the adjudicator to effect recovery from either Party in accordance with paragraph 52, the adjudicator may by direction determine the apportionment between the parties of liability for his fees and expenses, or otherwise the Parties shall each be liable to pay one-half share of the adjudicator's fees and expenses.

54. The adjudicator shall not be liable for anything done or omitted in the discharge or purported discharge of his functions as adjudicator unless the act or omission is in bad faith, and any employee or agent of the adjudicator shall be similarly protected from liability.

Related Disputes

55. Notwithstanding the terms of paragraphs 2, 3 and 6 to 9 above, in the event that a dispute or potential dispute under, or in connection with any contract associated with the Edinburgh Tram Network (referred to in this Schedule 13 (*Dispute Resolution Procedure)* as "**Related Contracts**")), has arisen or arises out of substantially the same issues of fact and/or law (as the case may be) as a Dispute under the Agreement (a "**Related Dispute**"), then providing that the Related Contract contains dispute resolution provisions in terms substantially the same as set out in this Schedule 13 (*Dispute Resolution Procedure*) (save for necessary changes), either Party may require and direct that the Dispute and the Related Dispute be dealt with together at an appropriate stage of the Dispute Resolution Procedure.

56. In the event that a Related Dispute has already been referred to the decision of an adjudicator in accordance with the provisions of the Related Contract, and the Client is of the opinion that a Dispute is to be (but has not yet been) referred to adjudication under this Schedule 13

TIE00899939_1161

(*Dispute Resolution Procedure*), the Client or the Tram Supplier may refer the Dispute, or may by notice in writing to the Tram Supplier require that the Dispute be referred (as the case may be) to the adjudicator appointed under the Related Contract to decide upon the Related Dispute, with the intention that such adjudicator shall, insofar as is relevant, practicable and appropriate, come to the same conclusion as to the facts and apply the same reasoning and analysis in reaching a decision on the Dispute as the adjudicator's conclusions, reasoning and analysis applied by him as the adjudicator in the Related Dispute and:

56.1 the adjudicator shall, if practicable, hear the Dispute at the same time as the Related Dispute and shall request such extension of time for producing his decision or award as he may require in order to reach a decision in respect of each of the Dispute and the Related Dispute at the same time. The Parties shall agree to such request for an extension of time, except in the event that the Dispute or the Related Dispute relates to "construction operations" within the meaning ascribed to that term by the Housing Grants, Construction and Regeneration Act 1996 (if applicable) (unless otherwise agreed by the Parties, all parties to the Related Dispute and the adjudicator);

56.2 except in the event that the Dispute or the Related Dispute relates to "construction operations" within the meaning ascribed to that term by the Housing Grants, Construction and Regeneration Act 1996 (if applicable) (unless otherwise agreed by the Parties, all parties to the Related Dispute and the adjudicator), the adjudicator shall have power (if so requested by the Client) to make his decisions or awards in the Dispute and the Related Dispute in such a manner as if the rules applicable in the Court of Session, Scotland as to the joining of one or more defenders or third parties or conjoining actions were applicable to the Parties to the Dispute and the Related Dispute, and to the adjudicator; and

56.3 the Client shall procure that, as soon as practicable, the other party or parties to the Related Dispute shall give the Tram Supplier copies of the Related Contract, the Referral Notice in the Related Dispute and any other documentation provided to the adjudicator by any party to the Related Dispute.

57. In the event that a Dispute has already been referred to the decision of an adjudicator, and the Client is of the opinion that a Related Dispute is to be (but has not yet been) referred to adjudication, the Client may refer the Related Dispute to the adjudicator appointed under this Schedule 13 (*Dispute Resolution Procedure*) to decide upon the Dispute, and:

57.1 the adjudicator shall, if practicable, hear the Related Dispute at the same time as the Dispute and shall request such extension of time for producing his decision or award

TIE00899939_1162

as he may require in order to reach a decision in respect of each of the Dispute and the Related Dispute at the same time. The Parties shall agree to such request for an extension of time, except in the event that the Dispute or the Related Dispute relates to "construction operations" within the meaning ascribed to that term by the Housing Grants, Construction and Regeneration Act 1996 (if applicable) (unless otherwise agreed by the Parties, all parties to the Related Dispute and the Adjudicator).

57.2 except in the event that the Dispute or the Related Dispute relates to "construction operations" within the meaning ascribed to that term by the Housing Grants, Construction and Regeneration Act 1996 (if applicable) (unless otherwise agreed by the Parties, all parties to the Related Dispute and the adjudicator), the adjudicator shall have power (if so requested by the Client) to make his decisions or awards in the Dispute and the Related Dispute in such a manner as if the rules applicable in the Court of Session, Scotland as to the joining of one or more defenders or third parties or conjoining actions were applicable to the Parties to the Dispute and the Related Dispute, and to the adjudicator;

57.3 as soon as practicable, the Client shall give to the Tram Supplier copies of the Related Contract, the Referral Notice in the Related Dispute and any other documentation provided to the adjudicator by any party to the Related Dispute.

[redacted]

Director/Authorised Signatory
tie LIMITED

[redacted]

Director/Authorised Signatory
CONSTRUCCIONES Y AUXILIAR DE FERROCARRILES S.A. (CAF)

TIE00899939_1163

This is Schedule 14 referred to in the foregoing Tram Supply Agreement between tie Limited and Construcciones Y Auxiliar de Ferrocarriles S.A. (CAF)

SCHEDULE 14

PANELS FOR THE DISPUTE RESOLUTION PROCEDURE

CONSTRUCTION/OPERATIONAL

Alan Wilson
[redacted]
Chesterfield
DERBYSHIRE
[redacted]

Tony Canham
[redacted]
NORWICH
[redacted]

Peter Chapman
[redacted]
OXSHOTT
SURREY
[redacted]

Guy Cottam
[redacted]
BATH
[redacted]

FINANCIAL

Nigel Lowe
Nigel Lowe Consulting Limited
[redacted]
LONDON
[redacted]

Bryan Porter
[redacted]
GLASGOW
[redacted]

John Hunter
Hunter Consulting
[redacted]
STIRLING
[redacted]

Eric Mouzer
[redacted]
BIRMINGHAM
[redacted]

LEGAL

Lord Dervaird (Prof. John Murray QC)

[redacted]

EDINBURGH

[redacted]

Gordon Coutts, QC

[redacted]

EDINBURGH

[redacted]

Robert Howie, QC

[redacted]

EDINBURGH

[redacted]

[redacted]

Director/Authorised Signatory
tie LIMITED

[redacted]

Director/Authorised Signatory
CONSTRUCCIONES Y AUXILIAR DE FERROCARRILES S.A. (CAF)

This is Schedule 15 referred to in the foregoing Tram Supply Agreement between tie Limited and Construcciones Y Auxiliar de Ferrocarriles S.A. (CAF)

SCHEDULE 15

RISK MANAGEMENT

Required Action from the Tram Supplier	Timing/Frequency applicable to the Tram Supplier
The Tram Supplier shall support the Client in the development of the **Project Risk Management Plan** ("**PRMP**"). The PRMP will detail the management of commercial, environmental, safety and security risk aspects of the Edinburgh Tram Network. The PRMP shall be focused on the risk factors related to the implementation of the Edinburgh Tram Network and shall outline the management arrangements to facilitate the inclusion of input from third parties. The risk management process will be applied and coordinated throughout the Term. The PRMP shall indicate the critical success factors, key areas of focus and individuals involved.	Input from the Tram Supplier as required by the Client to facilitate the delivery of the PRMP within the timescales agreed pursuant to the Infraco Contract. Input will be required from the Tram Supplier on an ongoing basis during the Term to allow periodic updates of the PRMP to be issued.
The Tram Supplier shall support the Client with contribution to the **Project Assumptions Register** ("**PAR**") , which shall record and report all capex, opex, lifecycle, revenue, programme, quality, functionality and approvability assumptions and consequent risks in relation to the Edinburgh Tram Network throughout the Term. The PAR shall be one central register with input from a number of parties, which the Client will co-ordinate. The Tram Supplier shall document all relevant assumptions made in relation to the performance of the Tram Works.	Input from the Tram Supplier as required by the Client to facilitate the delivery of the PAR within the timescales agreed pursuant to the Infraco Contract. Input will be required from the Tram Supplier on an ongoing basis during the Term to allow periodic updates of the PAR to be issued.
The Tram Supplier shall support the Client with contribution to the **Project Risk Register** ("**PRR**") to be developed by the Client. The PRR should summarise all capex, opex, lifecycle, revenue, programme, quality, functionality and approvability risks to the Edinburgh Tram Network. The PRR will also detail the proposed and completed mitigation of such risks. The PRR shall include analysis of each risk in terms of 'likelihood' and 'impact' prior to and following mitigation to allow effectiveness of mitigation to be assessed, responsible owner of each risk and graphical summaries of risk profile.	Input from the Tram Supplier as required by the Client to facilitate the delivery of the PRR within the timescales agreed pursuant to the Infraco Contract. Input will be required from the Tram Supplier on an ongoing basis during the Term to allow periodic updates of the PRR to be issued.

Required Action from the Tram Supplier	Timing/Frequency applicable to the Tram Supplier
The risks to be addressed should include strategic, commercial, economic, legal and regulatory, organisational, environmental, technical, operational and infrastructure risks. The Client will continue to use "Active Risk Manager", and the Client shall bear all the costs for license agreements and access costs for its use by the Client and any other party with the consent of the Client.	
The Tram Supplier shall prepare and submit a **Progress Report** on risk to the Client on the status of risk management and mitigation in relation to the Tram Works giving a summary of new risks identified, new assumptions, key matters to be resolved and achievements, including risks that have been closed out. The Progress Report must demonstrate how identified risks are being actively managed by the Tram Supplier. The Progress Report should indicate "**Red-Amber-Green**" **(RAG)** status on key components including specification compliance, incomplete design and programme for outstanding work.	Delivery by the Tram Supplier to the Client within 1-month of the Effective Date. The Tram Supplier shall provide an updated Progress Report on a monthly basis throughout the Term.
The Tram Supplier shall support the Client in the preparation and maintenance of a **Cost and Programme Contingency Report** ("**CPCR**") for the construction phase of the Edinburgh Tram Network. The CPCR shall indicate the recommended capital cost and programme contingency allowances to be considered. The CPCR to be provided by the Client will also include a detailed quantitative risk analysis using the Monte Carlo simulation (*@RISK*4.5 and *Pertmaster Project Risk* or equivalents) for both cost and programme components. The CPCR shall also summarise the recommended mitigation for the construction phase and also include the commissioning and defects phases of the project.	Input from the Tram Supplier to facilitate delivery of the CPCR within the timescales agreed pursuant to the Infraco Contract. Input will be required from the Tram Supplier on an ongoing basis during the Term to allow periodic updates of the CPCR to be issued

Required Action from the Tram Supplier	Timing/Frequency applicable to the Tram Supplier
The Tram Supplier shall engage in liaison with the Client and any other party requested by the Client regarding risk matters to ensure effective management of risk. Liaison to include participation in risk management meetings and workshops and assistance with development of the risk identification procedures relevant to the implementation of the Edinburgh Tram Network.	The Tram Supplier shall be available for monthly meetings with the Client and any other party requested by the Client. The Tram Supplier shall also engage in ongoing liaison (including participation in risk workshops) with such parties as required by the Client throughout the Term.
The Tram Supplier shall support the Client in the preparation of a **Construction Risk Control Report** ("**CRCR**"), which shall indicate the risks identified by the Client during the construction phase of the Edinburgh Tram Network, including, but not limited to, construction sequence, construction methodologies, access, quality, approvals, security, safety and compliance. The Tram Supplier shall assist in demonstrating how risks are to be managed and co-ordinated with other relevant parties, including the use of 'informed' registers, co-ordinating plans and summarising plans.	Input from the Tram Supplier to facilitate delivery of the CRCR within the timescales agreed pursuant to the Infraco Contract. Input will be required from the Tram Supplier on an ongoing basis during the Term to allow periodic updates of the CRCR to be issued.
The Tram Supplier shall support the Client in the preparation a **Commissioning Risk Control Report** which shall detail the plans for mitigating the risks associated with the commissioning of the Edinburgh Tram Network. The Commissioning Risk Control Report shall identify the areas where the largest commissioning risks may appear. This should cover operational and design risks that could be associated with the whole project including, but not limited to, the trams, the tracks, the power supply and the tram depot. The Commissioning Risk Control Report shall concentrate on the commissioning process, but shall also refer to ongoing issues which also affect the construction and/or operation of the Edinburgh Tram Network.	Input from the Tram Supplier to facilitate delivery of the Commissioning Risk Control Report within the timescales agreed pursuant to the Infraco Contract. Input will be required from the Tram Supplier on an ongoing basis during the Term to allow periodic updates of the Commissioning Risk Control Report to be issued
The Tram Supplier shall support the Client in the preparation a **Residual Risk Control Report** ("**RRCR**") that will detail the plans for mitigating the risks arising from the construction and commissioning of the Edinburgh Tram Network which are still of ongoing importance. The RRCR should clearly detail the areas of importance that could affect the project	Input from the Tram Supplier to facilitate delivery of the RRCR within the timescales agreed pursuant to the Infraco Contract. Input will be required from the Tram Supplier on an ongoing basis during the Term to allow periodic updates of the RRCR to be issued

Required Action from the Tram Supplier	Timing/Frequency applicable to the Tram Supplier
that will require to be addressed at the start of the project. These areas could be associated with design, operational and defects factors. Risks to be noted in the RRCR may include, but shall not be limited to, snagging, claims, specification defects and commercial concerns.	
The Tram Supplier shall support the Client in the preparation and maintenance of an **Operational and Maintenance Report** ("**OMR**") that will detail the identified risks associated with the provision of maintenance services in relation to the Edinburgh Tram Network.	Input from the Tram Supplier to facilitate delivery of the OMR within the timescales agreed pursuant to the Infraco Contract. Input will be required from the Tram Supplier on an ongoing basis during the Term to allow periodic updates of the OMR to be issued.

[redacted]

Director/Authorised Signatory
tie LIMITED

[redacted]

Director/Authorised Signatory
CONSTRUCCIONES Y AUXILIAR DE FERROCARRILES S.A. (CAF)

This is Schedule 16 referred to in the foregoing Tram Supply Agreement between tie Limited and Construcciones Y Auxiliar de Ferrocarriles S.A. (CAF)

SCHEDULE 16

COMMERCIALLY SENSITIVE INFORMATION

CAF considers as Commercially Sensitive Information any information delivered at any moment, to **tie** or the Client or any of the parties working, collaborating with **tie** or the Client, related with:

- Prices, including, but not limited to, overall amounts, partial amounts, options prices and payments milestones;
- Detailed technical drawings; and/or
- Detailed technical calculations.

[redacted]

Director / Authorised Signatory
tie LIMITED

[redacted]

Director / Authorised Signatory
CONSTRUCCIONES Y
AUXILIAR DE FERROCARRILES SA.
(CAF)

This is Schedule 17 referred to in the foregoing Tram Supply Agreement between tie Limited and Construcciones Y Auxiliar de Ferrocarriles S.A. (CAF)

SCHEDULE 17

CODE OF CONSTRUCTION PRACTICE AND CODE OF MAINTENANCE PRACTICE

Part 1 - CODE OF CONSTRUCTION PRACTICE

1. MANAGEMENT SYSTEMS

1.1 The Tram Supplier shall implement and comply with the following management systems:

1.1.1 a "quality management system" in accordance with ISO 9001;

1.1.2 a "safety management system" in accordance with OHSAS 18001 or HSG65; and

1.1.3 an "environmental management system" in accordance with ISO 14001.

2. INSTRUCTION AND TRAINING

2.1 The Tram Supplier shall ensure that its employees, Sub-Contractors, agents and others on Site undertake a number of inductions. These shall comprise:

2.1.1 project-specific induction for the Tram Supplier Works (provided by the Tram Supplier); and

2.1.2 worksite and task-specific-induction including a method statement briefing and toolbox talk, (provided by the Tram Supplier).

2.2 Any persons who have not received the induction, for example visitors, shall be escorted on Site by a competent inducted person.

2.3 The Tram Supplier shall maintain induction and training records in order that **the Client** can inspect them. These records shall identify the scope of the induction and training and the persons who received them.

3. SAFE SYSTEMS

3.1 **Risk Assessments**

3.1.1 The Tram Supplier shall prepare risk assessments for all work activities being undertaken.

3.1.2 Each risk assessment shall include as a minimum the following details:

3.1.2.1 Document control

3.1.2.1.1 document title and number;

3.1.2.1.2 revision status;

3.1.2.1.3 authorisation for use; and

3.1.2.1.4 reference to supplementary documentation.

3.1.2.2 identification of any hazards;

3.1.2.3 identification of those who might be harmed, and how; and

3.1.2.4 an evaluation of the risks and, in relation to each risk, the control measures required to reduce the risk to an appropriate level.

3.2 Method Statements

3.2.1 The Tram Supplier shall prepare method statements for all work activities which fall within the definition of "construction work" under the Construction (Design & Management) Regulations 2007. Each method statement shall relate to the relevant work location.

3.2.2 Categorisation of Method Statements

Method statements shall be categorised as detailed below:

CATEGORY	RISK	APPROVAL PROCESS
A1	**Low risk.** Minimum implications on Human life or the Project	**Prepared** by Contractor / Sub Contractor **Approved** by Contractor / Sub Contractor
A2	**Medium risk.** Possibly implications on Human life or the Project	**Prepared** by Contractor / Sub Contractor **Approved** by Contractor / Sub Contractor **For Information** the Client Ltd Project Manager
A3	**High risk.** Major implications on Human life or the Project.	**Prepared & Approved** by Contractor/ Sub Contractor **Accepted** by **the Client** Ltd HSQE Advisor **Accepted** by **the Client** Ltd Project Manager

3.2.3 Each method statement shall include as a minimum the following details:

3.2.3.1 Document control

3.2.3.1.1 document title and number;

3.2.3.1.2 revision status;

3.2.3.1.3 contractor prepared and approved; and

3.2.3.1.4 **the Client** acceptance for use (as defined below).

3.2.3.2 Scope of work

3.2.3.3 Hazards identified

3.2.3.4 Public interface arrangements

3.2.3.5 Protection of existing infrastructure

3.2.3.6 Environmental protection arrangements

3.2.3.7 Plant, equipment and materials

3.2.3.8 Emergency procedures

3.2.4 The documentation referred to in paragraph 3.2.3 above shall be developed so that it is specific to the Tram Supplier Works. The Tram Supplier shall ensure that revisions and updates can be identified.

3.2.5 The Tram Supplier shall issue a copy of its procedure for the production of method statements and risk assessments to **the Client** for approval in accordance with the Review Procedure.

3.3 **Submission of Risk Assessments & Method Statements**

3.3.1 A 4-week "look ahead" schedule identifying the required scope of the Tram Supplier Works shall be issued to **the Client** by the Tram Supplier. This schedule shall identify the relevant risk assessments and method statements which are required in respect of each such scope. **the Client** shall identify which risk assessments and method statements require to be provided by the Tram Supplier to **the Client** based upon the categorisation of method statements in accordance with paragraph 3.3.2 above.

TIE00899939_1173

3.3.2 The Tram Supplier shall issue risk assessments and method statements to **the Client** a minimum of 20 Business Days prior to the commencement of the Tram Supplier Works which are the subject of the method statements and risk assessments.

3.3.3 The Tram Supplier shall not undertake any Tram Supplier Works for which a risk assessment or method statement has been requested without the agreement of **the Client**.

3.3.4 **the Client** shall supply a letter of acceptance with all requested and returned Method Statements and Risk Assessments, which are found to be acceptable for site use. No requested Method Statement work activities shall commence on site without this letter of acceptance.

3.3.5 Irrespective of whether or not **the Client** has reviewed a risk assessment and method statement produced by the Tram Supplier, the Tram Supplier shall issue one copy of the risk assessment and method statement to **the Client** for information purposes before any work shall commence.

3.4 **Permit to Commence Works**

3.4.1 The Tram Supplier shall comply with **the Client**'s system for controlling access to undertake work activities, which shall require the Tram Supplier to obtain an approved permit to commence works from **the Client** (**"Permit to Commence Works"**) for each Work Site and agreed scope of construction works.

3.4.2 In so far as not otherwise submitted pursuant to this Agreement, the Tram Supplier shall submit a form for each required Permit to Commence Works (**"Permit to Commence Works Form"**) which is required, to **the Client** a minimum of 5 Business Days in advance of the access being required.

3.4.3 The Tram Supplier shall advise **the Client** of the persons within its organisation who are competent to authorise the Permit to Commence Works Forms.

3.4.4 Each Permit to Commence Form shall identify the necessary licences, third party approvals and notifications that have been obtained / granted to enable the works to be undertaken, together with the specific control measures that

TIE00899939_1174

require to be implemented under the Tram Supplier's safety management system.

3.4.5 The Tram Supplier's personnel who will implement the Permit to Commence procedure shall be required to undergo training by **the Client.**

3.5 **Permits to Work**

3.5.1 The Tram Supplier shall implement a "permit to work" system for the following activities as a minimum:

3.5.1.1 hot works;

3.5.1.2 entry into confined spaces;

3.5.1.3 work affecting services;

3.5.1.4 access to live facilities; and.

3.5.1.5 works on private land controlled by third parties.

The Tram Supplier shall implement a procedure for managing third party permits to work

3.5.2 The Tram Supplier shall issue a copy of its permit to work procedures to **the Client** for approval in accordance with the Review Procedure.

3.5.3 The Tram Supplier shall advise **the Client** of the competent persons within its organisation who shall be competent to authorise permits to work.

3.6 **Personal Protective Equipment**

3.6.1 The Tram Supplier shall provide all necessary personal protective equipment (**"PPE"**) for its employees and provide them with all necessary information, instruction and training on its use.

3.6.2 The Tram Supplier shall ensure that all persons on any Work Site (including any Tram Supplier Parties and visitors) wear the necessary PPE.

3.6.3 **the Client's** specific requirements for PPE with regard to particular tasks are as follows:

3.6.3.1 head protection conforming to BS 5240 or BS EN 397;

TIE00899939_1175

3.6.3.2 protective footwear complying with BS EN 345 (safety boots which provide ankle support and contain steel midsoles shall be required for works which are carried out on railway land);

3.6.3.3 yellow high visibility clothing to comply with BS EN 471:1994, Table 1, Class 2 or 3, which shall be worn at all times; the clothing shall comply with the requirements of Clause 4.2.3(b) in all cases; jackets with sleeves in accordance with Clause 4.2.4 and to Class 3 shall be worn on dual carriageway roads with a speed limit of 50 mph or above, unless operatives stay within the working space at all times; and

3.6.3.4 orange high visibility clothing complying with GO/RT 3279 shall be worn where any works are carried out on railway land.

3.7 **Work Site Completion Certificates**

3.7.1 The Tram Supplier shall comply with **the Client**'s system for certifying the completion of the relevant work activities within each Work Site, which shall require the Tram Supplier to complete a completion certificate (**"Work Site Completion Certificate"**) for each Work Site in relation to which the relevant Tram Supplier Works have been completed.

3.7.2 The Work Site Completion Certificate shall be completed by the Tram Supplier to identify and cross reference the quality control records, testing and commissioning records and any other relevant records identified within Schedule 2 (*Employer's Requirements*) and this Schedule 3 (*Code of Construction Practice*), together with details of any outstanding works which are required and the timescales for undertaking them.

4. REPORTING

4.1 The Tram Supplier shall report the following information to **the Client** within the same working day or 24 hours of the event occurring:

4.1.1 details of any accident or incident;

4.1.2 details of any environmental event; and

TIE00899939_1176

4.1.3 details of any visit by either the Health & Safety Executive or SEPA, together with details of any report issued or enforcement action that resulted.

4.2 The Tram Supplier shall include the following information within its four weekly progress report which is to be provided to **the Client** as part of the Tram Supplier Works:

4.2.1 an update on any events referred to in paragraphs 4.1.1 to 4.1.3;

4.2.2 details of any near misses;

4.2.3 details of any accident investigation reports raised by the Tram Supplier including details of corrective and preventative actions which have been taken;

4.2.4 the accident incident rate (**"AIR"**) and accident frequency rate (**"AFR"**) for the Tram Supplier Works (including details of total hours worked and number of persons employed);

4.2.5 a summary of the monitoring and internal auditing activities undertaken by the Tram Supplier in the period, including details of any corrective or preventative actions raised or closed out; and

4.2.6 details of the programme of monitoring and auditing planned for the subsequent four-weekly period.

5. AUDITING AND MONITORING

5.1 The Tram Supplier shall be responsible for carrying out, auditing and monitoring of its site establishment and work activities.

5.2 **the Client** shall undertake regular auditing and monitoring of the Tram Supplier's activities and site establishment and documentation records, and the Tram Supplier shall action any findings which are raised by **the Client**.

6. NON-CONFORMANCE, COMPLAINTS AND DISCIPLINARY MATTERS

6.1 **the Client** shall implement a process for recording and processing breaches by the Tram Supplier of the requirements of this Schedule 3 (*Code of Construction Practice*) and complaints.

6.2 The Tram Supplier shall take such steps as are required by **the Client** to remedy any such infringement or address any such complaint and the following priority levels for action shall apply:

Level of Urgency	Category of Notification	Required Response Time
1	High urgency. Involves an immediate threat to persons or property or the circumstances otherwise require immediate rectification.	Immediate action required. If response not completed by the Tram Supplier within 4 hours, **the Client** may procure that the relevant work is carried out and the costs of so doing shall be recovered from the Tram Supplier.
2	Medium urgency. No immediate threat to persons or property, but circumstances require rectification within 24 hours.	Remedial action requires to be completed within 24 hours. If the Tram Supplier does not complete the required response within 24 hours, **the Client** may procure that the relevant work is carried out and the costs of so doing shall be recovered from the Tram Supplier.
3	Issue requires rectification, but no immediate threat to persons or property and the circumstances do not otherwise require immediate rectification.	Timescales for rectification to be agreed between the Tram Supplier and **the Client**. In the event that the Tram Supplier does not comply with the agreed timescales, **the Client** may procure that the relevant work is carried out and the costs of so doing shall be recovered from the Tram Supplier.

If the Tram Supplier fails to take any remedial action required by **the Client** pursuant to the table above, **the Client** shall be entitled to employ and pay other persons to carry out the same and all costs incurred by **the Client** shall be recoverable from the Tram Supplier by **the Client** and may be deducted by **the Client** from any monies due or to become due to the Tram Supplier or, alternatively, recoverable from the Tram Supplier as a debt.

6.3 Without prejudice to Clause 27 (*Removal of Tram Supplier's Employees*) of the Agreement, **the Client** shall implement a process for initiating disciplinary actions which could arise from complaints received in respect of Tram Supplier staff or breach by any member of the Tram Supplier's staff in respect of the requirements of Schedule 2 (*Employer's Requirements*) or this Schedule 3 (*Code of Construction Practice*). These comprise:

6.3.1 Black Card: issued for gross misconduct, or the aggregation of two Red Cards or three Yellow Cards - results in employment on the Edinburgh Tram project being terminated for the individuals involved.

TIE00899939_1178

6.3.2 Red Card: issued for serious misconduct, or the aggregation of two Yellow Cards.

6.3.3 Yellow Card: issued for misconduct.

7. IDENTIFICATION

7.1 The Tram Supplier shall ensure that all site construction staff are easily identifiable to the public by use of photo identity cards.

7.2 The Tram Supplier shall ensure that all site construction staff identify their employer by means of their company logo on their high visibility waistcoat / jacket and safety helmet.

8. HOURS OF WORKING

8.1 Normal maximum hours of permissible working for the Tram Supplier Works shall be:

Monday – Friday	**0700 – 1900 hours**
Saturday	**0800 - 1300 hours**

8.2 These hours of work shall not apply to equipment which is required to operate continuously (e.g. for safety or environmental reasons) or to work undertaken within fully enclosed areas such as buildings.

8.3 **Work Outside Normal Hours**

8.3.1 In certain circumstances work outwith these hours may be undertaken with the prior approval of **the Client** and CEC. These circumstances may include:-

8.3.1.1 Sunday and evening/night working on public roads and in the vicinity of the railway network, where such working is required to minimise disruption to other traffic; or

8.3.1.2 where, through consultation with local residents and businesses adjacent to the proposed Tram Supplier Works to be undertaken outwith the normal hours of working, it is deemed by the Tram Supplier acting reasonably and having due and proper regard to the

TIE00899939_1179

said consultation to be less disruptive to those businesses and residents by having the Tram Supplier working extended hours outwith the normal hours of working, or

8.3.1.3 where Tram Supplier Works are taking place in areas where there are no residents adjacent to the proposed Tram Supplier Works.

8.3.2 Application for prior approval must be made by the Tram Supplier at least two weeks in advance.

8.4 Where Sunday or evening and night working has the potential to disturb nearby land users and occupiers, the Tram Supplier shall notify such users and occupiers seven days in advance with a description of the work to be carried out, measures which will be taken to control noise or other disturbance, and proposed hours of working.

8.5 No works shall be undertaken between Haymarket at Magdala Crescent to Leith Walk Junction of London Road from and including the following dates:

Festival	03rd August 2008 until 07th September 2008;
Festival	02nd August 2009 until 06th September 2009;
Festival	01st August 2010 until 05th September 2010;
Christmas	07th December 2008 until 02nd January 2009;
Christmas	06th December 2009 until 04th January 2010; and
Christmas	05th December 2010 until 04th January 2011.

9. SITE ARRANGEMENTS

9.1 Site Housekeeping

9.1.1 A 'good housekeeping' policy shall be applied by the Tram Supplier at all times; this shall include, but not necessarily be limited to, the following requirements:

9.1.1.1 all working areas, including offices, shall be kept in a clean and tidy condition;

TIE00899939_1180

9.1.1.2 all working areas shall be a no-smoking area; specific areas within the Site shall be designated as smoking areas and shall be equipped with containers for smoking waste; these shall not be located at the boundary of the Site and adjacent to neighbouring land;

9.1.1.3 open fires shall be prohibited at all times;

9.1.1.4 all necessary measures shall be taken to minimise the risk of fire and the Tram Supplier shall comply with the requirements of the local fire authority;

9.1.1.5 radios (other than two-way radios used for the purposes of communication related to the Tram Supplier Works) and other forms of audio equipment shall not be operated on the Site;

9.1.1.6 any waste susceptible to spreading by wind or liable to cause litter shall be stored in enclosed containers;

9.1.1.7 rubbish shall be removed at frequent intervals and the Site kept clean and tidy;

9.1.1.8 hoardings shall be frequently inspected, repaired and re-painted as necessary;

9.1.1.9 eating and drinking shall only permitted within the Tram Supplier's designated welfare area;

9.1.1.10 adequate toilet facilities shall be provided for all Site staff;

9.1.1.11 food waste shall be removed frequently;

9.1.1.12 the Tram Supplier's personnel (including any Sub-Contractors) shall be required to conform to a reasonable dress code;

9.1.1.13 any behaviour that is lewd or likely to cause offence shall not be permitted; and

9.1.1.14 wheel washing areas shall be brushed clean frequently.

9.1.2 The Tram Supplier shall inspect all working areas at least weekly and shall provide a four weekly written report on compliance with paragraph 9.1.1

TIE00899939_1181

above. **the Client**, **the Client's** Representative or any other party authority by either of them may carry out inspections of the Site at any time without prior notice of time and place of the inspections. Access to all areas of the Tram Supplier Works shall be given to visiting inspectors and the Tram Supplier shall give inspectors all reasonable assistance during their Site inspection.

9.1.3 The Tram Supplier shall register the project with the Considerate Constructors Scheme.

9.2 **Welfare**

9.2.1 The Tram Supplier shall be responsible for ensuring that adequate welfare facilities are provided; adequate facilities shall comprise:

9.2.1.1 sufficient toilet facilities for all staff at readily accessible locations, including adequate supplies of toilet paper;

9.2.1.2 facilities for changing, storing and drying clothes, for heating water and for washing and drinking (the latter must have seating for each person and wipe-clean mess table tops);

9.2.1.3 washing facilities near every toilet facility and changing room; the washing facilities shall include a supply of hot and cold or warm water, soap or cleaning agent and towels or hot air drier;

9.2.1.4 clean, wholesome drinking water, clearly marked as such;

9.2.1.5 a means of heating food; and

9.2.1.6 rest facilities.

9.2.2 The Tram Supplier shall keep all welfare facilities clean and shall not use them for the storage of materials, plant and other working equipment.

9.2.3 The Tram Supplier shall provide suitable and sufficient fire fighting equipment for all on-site accommodation.

9.2.4 Where there is the possibility of female employees or visitors being present on the Site, the Tram Supplier shall provide separate toilet, washing and changing facilities.

TIE00899939_1182

9.3 **Fencing and Hoardings**

9.3.1 The Tram Supplier shall ensure that all working areas are sufficiently and adequately fenced to prevent the public and animals from straying on to the working area; hoardings shall be provided to suit the individual location by carrying out an appropriate risk assessment, but may be:

9.3.1.1 adjacent to a pedestrian route;

9.3.1.2 a modular wire mesh fence, a minimum of 1.8 metres in height, where appropriate for minimum security needs; or

9.3.1.3 a 2.4 m minimum height, plywood faced, timber framed boundary hoarding, of a surface density of not less than 7kg/m² or other hoarding providing equivalent security and noise attenuation, in the vicinity of noise sensitive neighbours;

9.3.1.4 in locations identified by the Client a proprietary steel panelled hoarding system a minimum of 2.4m in height;

9.3.1.5 a 2.4m minimum height, plywood faced, timber framed boundary hoarding, of a surface density of not less than 7kg/m² together with a covered walkway over a pedestrian route;

9.3.1.6 adjacent to a live road carriageway;

9.3.1.7 as for a pedestrian route, but in conjunction with a vehicle restraint system which complies with containment level T1 and T2 of BS EN 1317 - 2:1998, where determined by the risk assessment;

9.3.1.8 in areas not adjacent to a live carriageway or pedestrian route;

9.3.1.9 as for a pedestrian route;

9.3.1.10 a post and wire fence 1.2m in height erected on the line of the Permanent Land;

9.3.1.11 other designs, where a particular level of risk mitigation appearance or acoustic rating is considered to be required and is agreed with **the Client** and CEC; and

TIE00899939_1183

9.3.1.12where the Tram Supplier Works to be undertaken are of a minor nature, and subject to the approval of the Client, barriers comprising post and planks or similar proprietary systems can be used.

All fencing and hoardings shall comply with Chapter 8 of the Traffic Sign Manual.

All access and egress to worksites shall be via designated positions within the fencing and hoardings, which shall remain closed and secured when not in use.

9.3.2 All fencing and hoardings that create poorly lit pedestrian routes shall have appropriate lighting fitted by the Tram Supplier, and these shall be illuminated at all times when the adjacent street lighting is lit.

9.3.3 The Tram Supplier shall ensure that the location and design of Site boundaries, hoarding and temporary structures on the public road shall permit adequate visibility at junctions and proper forward visibility along the roads in accordance with the National Roads Directorate advice notes and the requirements of CEC.

9.3.4 The Tram Supplier shall ensure that where hoardings are provided, they are painted on the side facing away from the working area in a colour and style to be approved by **the Client** and CEC, and that the public side of the hoarding carries signs which identify the project and give appropriate contact information for the Tram Supplier.

The Tram Supplier shall ensure that where fencing is provided the fence panels are covered by material that complies with the requirements of Loss Prevention Standard LPS 1215 *Flammability Requirements and Tests for LPCB Approval of Scaffolding Materials.* The material shall be printed in a colour and style to be approved by **the Client** and CEC, and carries signs which identify the project.

9.3.5 All hoardings shall be maintained by the Tram Supplier in a neat and tidy condition at all times, 24 hours, 7 days a week.

9.3.6 The Tram Supplier shall be expressly prohibited from displaying or allowing to be displayed any advertisement or notice including illicit bill or fly posting on the hoardings. The Tram Supplier shall ensure that all graffiti, fly posting

TIE00899939_1184

or defacement to the hoardings is removed and made good or obscured within 24 hours.

9.3.7 An information board shall be provided by the Tram Supplier at each working area detailing information on the work programme and estimated duration of the Tram Supplier at that working area, together with the location of the information centre, the web address and a 24-hour telephone number for use by members of the public who wish to lodge complaints or comments or additional information.

9.3.8 All fencing and hoarding shall be removed as soon as reasonably practicable after the completion of any part of the Tram Supplier.

9.4 **Lighting and Visual Intrusion**

9.4.1 The Tram Supplier shall site construction buildings, equipment and lighting so as to minimise visual intrusion and light spillage at nearby residential properties, in so far as is consistent with the safe and efficient operation of each Work Site. Lighting shall be removed as soon as is consistent with the safe and efficient operation of each Work Site.

9.4.2 Site lighting shall be positioned and directed by the Tram Supplier so as to minimise nuisance to residents and to minimise distractions or confusion to passing drivers on adjoining public roads. This provision shall apply particularly to working areas where work after dark will be carried out and the Tram Supplier shall provide appropriate lighting for these sites.

9.4.3 So far as is practicable, all power to temporary traffic signals, lighting and the like shall be taken by the Tram Supplier from mains supplies rather than from portable generators. Where portable generators are used, industry best practice shall be followed to minimise noise and pollution from such generators.

9.4.4 The Tram Supplier shall comply with the Institute of Lighting Engineers' document *Guidance Notes on Reduction of Light Pollution 2000* in so far as is reasonably practicable and applicable to the Tram Supplier.

TIE00899939_1185

9.5 **Access and Loading**

9.5.1 The Tram Supplier shall ensure that lorries shall enter and exit the Site in a forward direction at designated locations, except where space restriction does not permit this. If the reversing of vehicles into public spaces is required, then a responsible person observing the rear of the vehicle shall properly control the movement. The sounding of audible reversing alarms shall not be permitted outside normal working hours, except where this has been approved by **the Client** and CEC in connection with Tram Supplier Works permitted under paragraph 8.3 above). Entry and exit conditions shall be subject to prior approval by **the Client**, CEC and the Lothian and Borders Police before implementation.

9.5.2 Access to and egress from the Site shall be carried out by initiating a left turn wherever reasonably practicable.

9.5.3 All loading and unloading of vehicles shall take place off the public road as far as is reasonably practicable.

9.6 **Security**

9.6.1 Adequate security shall be exercised by the Tram Supplier to protect the public and prevent unauthorised entry to or exit from the Site. Site gates, where used, shall be closed and locked when there is no Site activity and Site security measures shall be implemented.

9.6.2 Site security cameras, where used, shall be placed in locations which will not unduly infringe upon the privacy of local residents.

9.7 **Living Accommodation**

9.7.1 No living accommodation shall be provided by the Tram Supplier within any construction working area. Mess rooms, locker rooms, toilets and showers shall be permitted at Work Sites.

9.8 **Clearance of Site on Completion**

9.8.1 The Tram Supplier shall clear and clean all utilities apparatus (where relevant to the Tram Supplier Works), working areas and accesses as work proceeds and when no longer required for the carrying out of the Tram Supplier Works.

TIE00899939_1186

9.8.2 All surplus soil and materials, rubbish, Temporary Works (including temporary roads and hardstandings), Tram Supplier's Equipment, sheds, offices and temporary fencing shall be removed, post holes filled and the surface of the ground restored as near as practicable to its original condition, or to such condition as has previously been agreed with **the Client** and CEC in accordance with this Agreement and/or the Specification (as appropriate).

9.9 **Pest Control**

9.9.1 The Tram Supplier shall ensure that the risk of infestation by pests or vermin is minimised by adequate arrangements for the disposal of food waste or other material attractive to pests. If infestation occurs, the Tram Supplier shall take such action to deal with it as required by **the Client** and CEC.

10. REQUIREMENTS RELATING TO WORKS AFFECTING EDINBURGH AIRPORT

10.1 The Tram Supplier shall comply with the requirements of Edinburgh Airport Limited in relation to aerodrome safeguarding, including those requirements included within the Town and Country Planning (Safeguarded Aerodromes, Technical Sites and Military Explosives Storage Areas) (Scotland) Direction 2003 (SEDD Circular 2/2003).

10.2 The Tram Supplier shall have regard to, and comply (where relevant) with all BAA and CAA guidelines, including, (but not necessarily limited to):

10.2.1 CAP 168 Licensing of Aerodromes.

10.2.2 CAP 680 Aerodrome Bird Control.

10.2.3 CAA Safeguarding of Aerodromes Advice Note 1 (Safeguarding – An Overview).

10.2.4 CAA Safeguarding of Aerodromes Advice Note 2 (Lighting near Aerodromes).

10.2.5 CAA Safeguarding of Aerodromes Advice Note 4 (Cranes and Other Construction Issues).

10.2.6 BAA Standard Conditions for Aerodrome Safeguarding.

TIE00899939_1187

10.3 The Tram Supplier shall prepare for approval by **the Client** and Edinburgh Airport Limited a "Construction Management Strategy" as defined within CAA Safeguarding of Aerodromes Advice Note 4 (Cranes and Other Construction Issues). The Construction Management Strategy shall address as a minimum the following issues:

10.3.1 use of cranes or other tall construction equipment;

10.3.2 control of activities likely to produce dust or smoke clouds

10.3.3 the design of temporary lighting to avoid distracting pilots (see Advice Note 2);

10.3.4 storage of materials, particularly compliance with height limits;

10.3.5 control and disposal of waste, to prevent attraction of birds; and

10.3.6 site restoration, to prevent attraction of birds.

11. REQUIREMENTS RELATING TO WORKS AFFECTING THE RAILWAY

11.1 The Tram Supplier shall comply with the requirements of Network Rail in relation to railway safeguarding.

11.2 The Tram Supplier shall comply with all Network Rail standards and guidelines, including but not limited to "*Contract Requirements (NR/SP/OHS/008)*" including the Safety Clause Menu and "*Health and Safety Management of Third Party Works (RT/LS/P/043)*".

12. HEALTH & SAFETY REQUIREMENTS

12.1 Safety Signage

The Tram Supplier shall be responsible for the provision of all safety signage required for the work activities being undertaken. Safety signage shall comply with the Health and Safety (Safety Signs and Signals) Regulations 1996.

12.2 Hazardous Substances

12.2.1 The Tram Supplier shall maintain a register of safety data sheets for all materials and substances used.

TIE00899939_1188

12.2.2 The Tram Supplier shall be responsible for undertaking "COSHH" assessments for materials and substances used or with which contact will be made on the Site.

12.2.3 The Tram Supplier shall liaise with **the Client** regarding proposals for storage of hazardous substances in open air, in buildings, within the workplace and the decanting, disposal of empty containers, tanks and cylinders.

12.3 **Electricity**

12.3.1 The Tram Supplier shall use electrical tools and equipment which operate at a voltage no greater than 110V. Where there is a requirement to operate tools and equipment using a voltage greater than 110V, the approval of **the Client** shall be obtained in writing.

12.3.2 Electrical tools shall be double insulated and used in conjunction with a RCD.

12.3.3 Tools shall be connected to a 240V supply via a portable 110V centre tapped transformer.

12.3.4 The lead between the 240V supply and the transformer shall be as short as is reasonably possible.

12.3.5 All temporary electrical systems shall possess a current inspection certificate.

12.3.6 All tools shall have passed an electrical safety test and shall be identified with a label which states the unique identification, the test date, the next test date and the organisation which carried out the electrical safety test.

12.4 **Provision and Use of Work Equipment**

12.4.1 The Tram Supplier shall be responsible for ensuring the inspection of all work equipment. Records of inspections shall be retained at the Site.

12.4.2 Work equipment shall only be used by authorised personnel, who have received appropriate training and certification.

12.5 **Lifting Operations and Lifting Equipment**

12.5.1 The Tram Supplier shall be responsible for ensuring that all lifting equipment is accompanied by current test and examination certificates.

TIE00899939_1189

12.5.2 Safe working loads shall be shown on all lifting equipment.

12.5.3 Lifting equipment and lifting operations shall only be used by authorised personnel, who have received appropriate training and certification.

12.6 Height Gauges for Low Structures

A height gauge in the form of a rigid "goal post" type structure shall be erected at:

12.6.1 all egress points from the worksites. The height that the cross bar is set to shall be dependent upon the minimum height of any obstruction that a vehicle will encounter on public or third party land; and

12.6.2 all access points to the worksites or in the proximity of an on site obstruction. The height to which the crossbar requires to be set shall be subject to review during the course of the Tram Supplier Works to ensure that it takes cognisance of the ongoing Tram Supplier Works.

The height gauge shall comprise a form that shall alert the driver of contact with the crossbar and shall be located in a position that shall enable the driver to take avoiding action prior to contacting any obstruction.

12.7 Overhead Power Lines

Where plant and equipment is working in the vicinity of an overhead power line, the distance between the plant and equipment and the overhead line should be at least:

12.7.1 15m (plus the length of the jib) if the lines are suspended from steel towers; or

12.7.2 9m (plus the length of the jib) if the lines are supported on wooden poles.

In cases where approach is likely, stout, distinctive barriers should be erected at ground level to prevent access. Where work is to take place close to overhead lines, detailed precautions should be discussed with the owner of the overhead lines. However, the responsibility for ensuring that precautions are adequate remains with the Tram Supplier, not with the owner of the power lines.

In addition to the specific precautions required when working in the vicinity of overhead power lines, the following shall be undertaken:

TIE00899939_1190

12.7.3 barriers shall be erected at least 6m away, to prevent inadvertent approach by other site vehicles; and

12.7.4 crossing points shall be clearly marked beneath the lines by means of a rigid "goal post" structure at a height specified by the electrical supplier.

Storage of materials shall be prohibited in the area between the overhead lines and the ground-level barriers.

13. FIRE PREVENTION

13.1 The requirements of the document "*Fire Prevention on Construction Sites: The Joint Code of Practice on the Protection from Fire of Construction Sites and Buildings Undergoing Renovation* (published by the Construction Confederation and the Fire Protection Association) shall apply to the Tram Supplier Works.

13.2 All temporary protective coverings shall comply with the requirements of the Loss Prevention Standard LPS 1207 'Fire Requirements for Protective Covering Materials'.

13.3 All scaffold cladding materials shall comply with the requirements of the Loss Prevention Standard LPS 1215 'Flammability Requirements for Scaffold Cladding Materials'.

13.4 The Tram Supplier shall, as appropriate to the work activities, appoint "a fire marshall" who shall be responsible for day to day fire safety.

13.5 A permit to work shall be implemented for all "hot works".

13.6 The use of halogen lighting shall be prohibited.

14. FIRST AID

14.1 the Tram Supplier shall be responsible for providing first aid provision for its personnel (including any Sub-Contractors) in accordance with the Health and Safety (First Aid) Regulations ("Regulations") 1981. This shall include the provision of:

14.1.1 a first aid box, the size of which shall be commensurate with the number of workers on Site; and

14.1.2 the required number of first aiders or appointed persons required by the Regulations.

15. INSPECTIONS

15.1 The Tram Supplier shall be responsible for undertaking the statutory inspections required in terms of the Construction (Health, Safety and Welfare) Regulations 1996 that relate to the Tram Supplier Works being carried out. The records of the inspections shall be retained on the Site.

16. ROADS AND FOOTPATHS, CYCLEWAYS AND BRIDLEWAYS

16.1 General

16.1.1 The Tram Supplier shall submit to **the Client** a statement setting out the proposed measures (including specified traffic routes) to be taken with respect to traffic and road safety for the duration of the Tram Supplier Works, to enable the development including all relevant information in relation to the Tram Supplier obtaining Temporary Traffic Regulation Orders (**"TTROs"**) and the equivalent of such orders as are applicable to third parties (for example Edinburgh Airport Limited), for approval before the Tram Supplier Works commence. The Tram Supplier shall circulate the approved statement to all bodies identified by **the Client** and CEC and any other bodies reasonably requested by **the Client**.

16.1.2 The measures to be taken with respect to traffic and road safety shall include, but not necessarily be limited to:

16.1.2.1use of TTROs; the Tram Supplier shall consult with **the Client,** CEC and other third parties on the arrangements for agreeing and implementing TTROs to facilitate road closures and the like; the use of TTROs shall take into account the requirement for, and availability of, suitable alternative routes;

16.1.2.2use of temporary signing and lining where required by **the Client** and CEC to identify places where construction is taking place;

16.1.2.3use of temporary signing to restrict vehicle types and sizes and define routes for construction traffic;

TIE00899939_1192

16.1.2.4use of appropriate temporary signing and lighting wherever the Tram Supplier Works are in progress to ensure the safety of all road users; and

16.1.2.5preparation and implementation of a programme agreed by Tram Supplier with **the Client** and CEC for road closures and temporary traffic signal arrangements.

16.2 **Temporary Road Closures And Diversions**

16.2.1 The Tram Supplier shall finalise the arrangements for required closures and diversions of specified highways, footpaths and cycle ways with **the Client** and CEC, BAA or any private landowner, to suit its Programme.

16.2.2 Before breaking up, closing or otherwise interfering with any street or footpath to which the public has access, the Tram Supplier shall make such arrangements with **the Client** and CEC as may be reasonably necessary to cause as little interference with the traffic in that street or footpath during the Tram Supplier Works as shall be reasonably practicable.

16.2.3 Temporary road closures which result in the diversion of bus routes shall be agreed by the Tram Supplier with the relevant bus operators who will in turn notify the Traffic Commissioner.

16.2.4 Pedestrian access to properties shall be maintained at all times where practicable, unless otherwise agreed with **the Client** and CEC and the owners and tenants of affected properties. Access to and from public facilities shall be maintained at all times unless otherwise agreed with the relevant administrating bodies.

16.2.5 Wherever the Tram Supplier Works interfere with the existing public or private roads or other ways over which there is a public or private right of way for any traffic, the Tram Supplier shall construct diversion ways as necessary. The standard of construction and lighting shall be suitable in all respects for the class or classes of traffic using the existing ways and the widths of the diversions shall not be less than that of the existing way unless otherwise agreed with **the Client** and CEC or the owner of the private road.

16.2.6 Diversion routes shall be constructed in advance of any interference with the existing ways, shall be kept as short as reasonably practicable and shall be

TIE00899939_1193

maintained by the Tram Supplier to provide adequately for the traffic flows. All diversion routes shall be removed and the road returned to **the Client** and CEC as soon as is reasonably practical after completion of the Tram Supplier Works. Liaison shall be undertaken with **the Client** and CEC regarding any special events such as the Edinburgh Festival, Christmas, New Year, sporting events and filming which might interact with the diversions.

16.2.7 Adequate horizontal clearance of 0.6 metres minimum shall be provided from the kerb line, to avoid fouling by vehicles. The minimum headroom beneath any projection over the road shall be 5.3 metres.

16.3 **Parking Provision for Construction Traffic**

16.3.1 Areas and locations of parking provision for site and construction traffic shall be agreed by the Tram Supplier with **the Client** and CEC prior to the commencement of Tram Supplier Works.

16.3.2 No daytime or overnight parking of site or construction vehicles outside any construction compounds or work sites shall be allowed except where the delivery or removal of materials is taking place at that location and with prior agreement with **the Client** and CEC, as required under paragraph 8.3 above.

16.4 **Pedestrian Routes, Cycle Routes and Bridleways**

16.4.1 The Tram Supplier shall ensure that all existing pedestrian routes, cycle routes and bridleways are maintained throughout the Tram Supplier Works unless otherwise agreed with **the Client** and CEC. Any temporary replacement footway or cycleway shall meet the following requirements:

16.4.1.1 all temporary and diverted footways, which replace footways which are currently accessible to wheelchairs and pushchairs, shall continue to be usable by such users where reasonably practicable and take into account DDA access requirements;

16.4.1.2 tactile paving shall be used where present on existing pedestrian facilities unless otherwise agreed with **the Client** and CEC;

16.4.1.3 any temporary footways and cycle ways shall have uniform surfaces; there shall be no steps and any longitudinal gradients shall be suitable for the prevailing conditions, preferably 1 in 20 and no

TIE00899939_1194

greater than 1 in 12; cross-falls shall be suitable for disposal of surface water run off, but ideally shall not exceed 1 in 30;

16.4.1.4 ramps shall be provided at all junctions of footways and cycle ways with carriageways; gradients shall be appropriate to the circumstances, not exceed 1 in 12, and the base of the ramps shall be flush with the carriageway; all temporary footways and cycle way ramps shall be surfaced in non-slip material and kept free from mud and debris; the Tram Supplier shall ensure that there is no ponding at any junction;

16.4.1.5 existing footway and cycle way widths shall be maintained where practicable; footway and cycle way widths shall not be reduced without the prior agreement and approval of CEC;

16.4.1.6 clear signing and protection measures shall be provided at all times for each pedestrian and cycle route or bridleway affected by the Tram Supplier Works, in accordance with Chapter 8 of the Traffic Signs Regulations and General Directions 1981 and relevant safety legislation; the Tram Supplier shall liaise and agree the signing requirements of all pedestrian and cycle routes affected by the Tram Supplier Works with **the Client** and CEC, and shall provide any additional signage and/or protection measures required and agreed with **the Client** and CEC; and

16.4.1.7 headroom clearance over footways and cycle ways shall be appropriate for the circumstances and a minimum of 2.3 metres; a horizontal clearance of 0.6 metres shall be provided from the kerb line, where practicable, for any hoarding to avoid fouling by vehicles; the minimum headroom beneath any projection over the highway shall be 5.3 metres, but will be higher for abnormal load routes; where a path is a designated bridleway, headway clearance shall be appropriate for the circumstances and a minimum of 3.6 metres; all pedestrian routes diverted onto the carriageway shall be clearly defined by continuous barriers, constructed to the reasonable requirements of **the Client** and CEC.

16.5 **Maintenance and Repair of the Road**

16.5.1 The Tram Supplier shall carry out a pre-construction inspection and take photographs of the public roads, footpaths and cycle ways in the vicinity of the Site in conjunction with **the Client** and CEC. The Tram Supplier shall produce a report of the results of the joint inspection. The report shall establish the general road conditions within and in the vicinity of the Site, the residual life of the road and the level of reinstatement likely to be required in order to comply with the requirements of this Agreement, including the Specification. The report shall be agreed and signed by both the Tram Supplier, **the Client** and CEC as appropriate.

16.5.2 The Tram Supplier shall take every reasonable precaution to prevent its operations from unnecessarily damaging the roads and footpaths within the Site and in the vicinity of the Tram Supplier Works.

16.5.3 The Tram Supplier shall carry out all maintenance works as are necessary to maintain the roads and footpaths affected by the Tram Supplier Works in a safe and serviceable condition to the reasonable satisfaction of CEC and **the Client**.

16.5.4 Reinstatements of the road shall be carried out in accordance with the RAUC(S) "*Specification for the Reinstatement for Openings of Roads*", October 2003.

16.6 **Existing Street Furniture**

16.6.1 No street furniture or other features within the vicinity of the Site and the Tram Supplier Works, but outwith the area covered by the Tram Legislation shall be unnecessarily disturbed or altered by the Tram Supplier Works, except as expressly required by **the Client** in accordance with this Agreement. Any damage to street furniture consequent upon construction activities connected with the Tram Supplier Works shall be reported to **the Client** and the appropriate owner or authority (unless the appropriate owner cannot be identified) immediately on discovery of the damage. Any damage shall be replaced or made good as soon as practicably possible and to the reasonable satisfaction of the owner of the street furniture or other feature.

TIE00899939_1196

16.6.2 Any street furniture or other obstructions outside the area to be occupied by the Tram Supplier but which are required to be moved in order to gain access to the Site shall, subject to the prior consent of the owner thereof, be removed and reinstated or replaced as appropriate, on completion of the Tram Supplier Works. Any costs associated therewith shall be borne by the Tram Supplier, including the costs of reinstatement or replacement.

16.7 **Vehicle Movements and Access to the Site**

16.7.1 The Tram Supplier and its Sub-Contractors and suppliers moving loads, construction plant, materials and spoil (including vehicles used for carrying such when empty) shall limit the use of the public roads for such purposes as far as reasonably practicable.

16.7.2 All access routes shall be agreed with **the Client** and CEC prior to the commencement of the relevant part of the Tram Supplier Works.

16.7.3 Vehicles arriving or leaving the Site shall do so during the normal working hours as specified in paragraph 8.1 above, unless otherwise agreed with **the Client** and CEC. Access (which is deemed to include both the route and entrance to any Work Site) by lorries shall be as agreed with **the Client,** CEC and the Lothian and Borders Police. Access to and egress from the Site shall be carried out by initiating a left turn wherever reasonably practicable.

16.7.4 All vehicles operating on the Site shall be fitted with roof mounted yellow flashing beacons and reversing alarms.

16.7.5 The Tram Supplier shall take all reasonable measures to ensure that delivery vehicles do not remain stationary on the road unnecessarily prior to entering the Site. In exceptional circumstances, for example where the Site is very constrained, it may be necessary to have the potential for a limited number of vehicles to stand on the road. The location of such standing areas their size and the duration of any standing periods shall be subject to prior agreement with **the Client,** CEC and the Lothian and Borders Police.

16.7.6 The Tram Supplier shall ascertain and comply with any restrictions in respect of abnormal load routes as they may affect access to the Site.

16.8 **Mud on Roads**

16.8.1 The Tram Supplier shall take strict measures to minimise the spillage of mud and loose materials on roads arising from the Tram Supplier Works and ensure that the roads are safe at all times. These shall include, but not necessarily be limited to:

16.8.1.1 the provision of easily cleaned hard standings for vehicles entering, parking and leaving the Site or construction compound;

16.8.1.2 the provision of wheel washing facilities at construction compounds and construction sites, including, where practicable, mechanical wheel spinners, adequate provision for drainage via settlement tanks and regular maintenance of settlement tanks;

16.8.1.3 where mechanical wheel wash facilities are not practicable at construction sites, the use of manual techniques to ensure that the wheels of vehicles are clean prior to them leaving the construction site;

16.8.1.4 the use of mechanical road sweepers and surface flushing apparatus to clean the hard standing and to remove any mud or debris deposited by site vehicles on roads, footpaths, and in gullies or drains in the vicinity of the Site; the road sweepers or other equipment shall be readily available whenever the need for cleaning arises;

16.8.1.5 the loading and sheeting of vehicles are in such a manner as to prevent material falling off during their journey;

16.8.1.6 compliance with the requirements regarding the control of dust outlined in paragraph 19 below; and

16.8.1.7 compliance with the requirements regarding the control of waste water, mud, debris from wheel washing outlined in paragraph 21 below.

TIE00899939_1198

16.9 **Provision, Erection and Maintenance of Traffic Safety and Control (Traffic Safety Measures)**

16.9.1 The Tram Supplier shall provide, erect and maintain such traffic signs, road markings, lamps, barriers and traffic control signals and such other measures as may be necessitated by the construction of the Tram Supplier Works in accordance with the requirements of the Agreement and to the approval of **the Client** and CEC. The Tram Supplier shall not commence any work which affects the public road until all traffic safety measures necessitated by the work are fully operational.

16.9.2 The Tram Supplier shall keep clean and legible at all times all traffic signs, road markings, lamps, barriers and traffic control signals and shall position, replace, reposition, cover or remove them as required by the progress of the Tram Supplier Works and to the reasonable requirements of **the Client** and CEC.

16.9.3 The Tram Supplier shall ensure that all barriers, footpath space and temporary footpaths (including the requirement for kerb ramps where use has to be made of the carriageway) shall comply with the requirements of the document *Inclusive Mobility A Guide to Best Practice on Access to Pedestrian and Transport Infrastructure* issued by the Mobility and Inclusion Unit of the Department for Transport.

16.9.4 So far as practicable, all power to temporary traffic signals and lighting shall be taken by the Tram Supplier from mains supplies rather than from portable generators. Where portable generators are used all reasonable measures will be taken to minimise noise and pollution from such generators.

16.10 **Implementation of the Closure of Roads and Access to Frontages**

16.10.1 The Tram Supplier shall not close any roads or private accesses until immediately before the area is required for construction in accordance with this Agreement and the Programme. The construction of the Tram Supplier Works shall follow in the area of a temporary closure expeditiously and shall be carried out efficiently and in a continuous manner to ensure that all temporary closures are re-opened as quickly as possible.

16.10.2 The Tram Supplier shall, in carrying out the Tram Supplier Works, take all reasonable precautions to prevent or reduce any disturbance or inconvenience to the owners, tenants or occupiers of adjacent properties, and to the public generally. The owners, tenants or occupiers of affected properties shall be informed of the Tram Supplier Works to be undertaken, their planned duration, road and access closures and alternative access routes (where required) in writing and by locally posted public notices at least one calendar month prior to work starting.

16.10.3 The Tram Supplier shall render all necessary assistance to occupiers of premises affected by the Tram Supplier Works so as to enable them to accept and send out deliveries to and from their premises during their normal working hours.

16.11 **Access for Emergency Vehicles**

16.11.1 The routes proposed by the Tram Supplier for emergency service vehicles and personnel to gain access to the Site, the construction corridor and neighbouring sites along the route shall be agreed by the Tram Supplier with the emergency services and **the Client** and CEC prior to the start of construction.

17. NOISE

17.1 **Noise Control**

17.1.1 The Tram Supplier shall take all practicable measures to minimise nuisance from noise. The noise limits specified in this paragraph 17.1 or which may be otherwise agreed with CEC shall not be regarded as a licence to make noise up to the stated limit.

17.1.2 Subject to the specific requirements of CEC and other affected third parties the following minimum requirements shall be met:

17.1.2.1 during normal working hours, as defined in paragraph 8.1 above the maximum noise levels measured 1 metre from any occupied dwelling or other building used for residential purposes, generated by construction plant and equipment shall not exceed the following limit:

TIE00899939_1200

Monday to Friday (inc.) 0700-1900 hours $L_{Aeq\ 12\ hour}$ 75 dB

Saturday 0800 - 1300 hours $L_{Aeq\ 5\ hour}$ 75 dB

17.1.2.2outside normal working hours, the following limits shall apply:

Period	**Hours**	**Limit**
Monday to Friday (inc.)	1900-2200	$L_{Aeq\ 3\ hours}$ 65 dB
Saturday	1300-2200	$L_{Aeq\ 9\ hour}$ 65 dB
Sunday & Bank Holidays	0800-2000	$L_{Aeq\ 12\ hours}$ 65 dB

17.1.2.3the default noise limit for any night time (2200 hours (or 2000 hours on Sundays and Bank Holidays) to 0700 (or 0800 on Saturdays, Sundays and Bank Holidays)) construction work shall be $L_{Aeq\ 1\ hour}$ 55dB at residential buildings; higher noise levels may be permitted where ambient noise levels are higher.

17.1.2.4the maximum noise levels measured 1 metre from any school, college or other teaching facility resulting from construction work shall not exceed the following limits:

At any time when occupied $L_{Aeq\ 1\ hour}$ 65 dB

17.1.2.5 the maximum noise level measured 1 metre from any office building or other building used for office purposes during normal working hours shall be as defined in paragraph 17.1.2.1 above.

17.1.3 In order to ensure that the best practicable means are used to meet the levels set out above, a programme of on-site monitoring by a suitably qualified practitioner shall be agreed between the Tram Supplier, **the Client** and CEC. This monitoring programme shall include the location and frequency of readings, and shall define to whom the results shall be made available. Monitoring shall be undertaken by the Tram Supplier at locations identified in the Environmental Statements as those where mitigation measures may be necessary to avoid significant noise disturbance.

TIE00899939_1201

17.1.4 In exceptionally difficult circumstances, essential work causing noise above these limits may be permitted with the prior approval of **the Client** and CEC. Where not otherwise required in accordance with this Agreement, application for prior approval must be made at least two weeks in advance of the relevant Tram Supplier Works commencing, and shall be fully justified and kept to the minimum necessary. Conditions may be attached to any permission for such Tram Supplier Works.

17.1.5 In the event that measurements indicate noise has exceeded the limits in paragraph 17.1.2 above of this clause, the Tram Supplier shall stop the operation in a safe manner and take all practicable measures to prevent recurrence. If this does not enable the limits to be met, exceptional permission must be applied for under the terms of paragraph 17.1.4 above.

17.1.6 Without prejudice to the other requirements of this paragraph 17, the Tram Supplier shall comply with the recommendations set out in BS 5228, '*Noise Control on Construction and Open Sites*'; insofar as these are reasonably practicable and applicable to the Tram Supplier Works, and in particular with the following requirements:

17.1.6.1 all vehicles and mechanical plant used for the purpose of the work shall be fitted with effective exhaust silencers and shall be maintained in good and efficient working order;

17.1.6.2 all compressors and generators shall be 'sound reduced' models fitted with properly lined and sealed acoustic covers, which shall be kept closed whenever the machines are in use, and all pneumatic percussive tools shall be fitted with mufflers or silencers of the type recommended by the manufacturers;

17.1.6.3 all machines in intermittent use shall be shut down in the intervening periods between work or throttled down to a minimum; noise emitting equipment which is required to run continuously shall be housed in a suitable acoustic enclosure (see BS5228 Part 1:1997, Figures B.1, B.2 and B.3 (or later issue));

17.1.6.4 stationary equipment with significant noise output shall be sited away from sensitive site boundaries as far as is practicable;

TIE00899939_1202

17.1.6.5temporary noise barriers shall be used to reduce noise levels where appropriate and practicable; barriers shall be located as close to the plant as possible, and shall have a mass per unit area of at least $7kg/m^2$;

17.1.6.6no deliveries shall arrive at the Site before 0700 hours;

17.1.6.7the engines of all parked vehicles or vehicles waiting to enter any work area shall be switched off within two minutes of arrival; and

17.1.6.8work compounds shall be laid out so that accesses and loading areas are located as far away from sensitive neighbours as practicably possible and so that temporary structures screen noisy areas where practicable.

17.1.7 Without prejudice to the requirements of this paragraph 17 set out above, the Tram Supplier shall comply with the City of Edinburgh Department of Environmental and Consumer Service's document *Construction Site Noise: A Guide for Contractors*, August 2000 (or current issue, if subsequent amendments have been issued), and shall liaise with that department in accordance with the requirements therein.

17.2 **Communications Regarding Noise**

17.2.1 The Tram Supplier shall give 7 days notice to local residents who may be adversely affected by noise from the proposed programme of Tram Supplier Works, providing a description of the work to be carried out, measures that will be taken to control noise or other disturbance, and the proposed hours of working.

17.2.2 The Tram Supplier shall provide **the Client** and any other party requested by **the Client** with a list of contacts who will be responsible for investigating and resolving noise issues in respect of the carrying out of the Tram Supplier Works.

TIE00899939_1203

18. VIBRATION

18.1 Vibration Control

18.1.1 Subject to the specific requirements of **the Client** and CEC, the following minimum requirements shall be met:

18.1.1.1 to protect residents and users of buildings from nuisance and harm the Tram Supplier shall, as far as practicable, not exceed the Vibration Dose Values specified in BS6472:1992 as resulting in a 'low probability of adverse comment'; and

18.1.1.2 to protect buildings and other structures from physical damage, peak particle velocity levels shall not exceed 5mm/sec except for particularly sensitive buildings or structures where the level shall not exceed 3mm/sec.

18.1.2 If vibration levels are predicted to exceed the criteria specified in paragraph 18.1.1 above, then the Tram Supplier shall procure that a suitably qualified practitioner undertakes monitoring during the activity and the Tram Supplier shall adopt alternative methods of working to reduce vibration levels to those prescribed in above. The monitoring programme shall be agreed between the Tram Supplier, **the Client** and CEC. This programme shall include the location and frequency of readings and will identify to whom the results should be made available.

18.1.3 In order to ensure that these levels are not exceeded, a programme of on-site monitoring by a suitably qualified practitioner shall be agreed between the Tram Supplier, **the Client** and CEC. This programme shall include the location and frequency of readings, and to whom the results should be made available and, as a minimum, shall cover all locations identified as 'significantly affected' in the Environmental Statement.

18.2 Inspection of Buildings and Other Structures

18.2.1 The Tram Supplier shall be responsible for the compilation of a schedule of all buildings or other structures, including scheduled monuments and listed buildings that are located within the Site, or which are located directly adjacent to such Work Sites, which may be at risk of physical damage or damage caused by vibration generated during the Tram Supplier Works. The

TIE00899939_1204

said schedule is to be subject to agreement with CEC, CEC having the power to add, or subtract, buildings from the schedule as they deem fit. The agreed schedule is to be published in accordance with the requirements of Schedule 2 (*Employer's Requirements*). A notice of inclusion within the schedule is to be delivered to each scheduled building, attachment of a notice to the building shall be sufficient evidence that notice has been served. Subject to the granting to the Tram Supplier of free and unhindered access to the building or structure, a record of the condition and survey of any defects in the building or structure shall be prepared prior to the commencement of any Tram Supplier Works. Certified copies of the building record and condition survey shall be made available free of charge by the Tram Supplier to the owners of the examined buildings or structures, on their presentation of proof of title to the building. The best practicable means shall be undertaken by the Tram Supplier to avoid damage, or to minimise damage where it is unavoidable. The condition of the buildings and other structures listed in the schedule shall be monitored at reasonable intervals during the Tram Supplier Works and for a period of one year after the completion of the said Tram Supplier Works. The results of the aforesaid monitoring shall be made available free of charge by the Tram Supplier to the owners of the examined buildings, on their presentation of proof of title to the building.

18.2.2 The results of this record of the conditions and survey of any defects shall be provided to **the Client** and CEC, the property owner and occupier and, in the case of scheduled or listed features, to CEC and Historic Scotland by the Tram Supplier.

18.2.3 Without prejudice to the provisions of Clause 36 (*Examination of Work Before Covering Up*), after the Tram Supplier Works have been completed and at any time up to two years after their completion, the owners of properties identified under paragraph 18.2.1 above may, upon providing reasonable evidence of damage, request that a second defects survey is undertaken. Any damage which is identified as being caused by the Tram Supplier Works shall be repaired by the Tram Supplier within a reasonable time of identification at the expense of the Tram Supplier to the reasonable satisfaction of the property owner and so that the property is returned no worse than the standard of repair and stability existing before the Tram Supplier Works commenced.

TIE00899939_1205

19. DUST AND AIR POLLUTION

19.1 Dust and Other Air Pollution

19.1.1 The Tram Supplier shall take all necessary measures to avoid creating a dust nuisance during the Tram Supplier Works.

19.1.2 Particular consideration shall be given by the Tram Supplier to Tram Supplier Works affecting the operations of Edinburgh Airport Limited. Details of the specific mitigation measures shall be included within the Construction Management Strategy identified under paragraph 10.3 above.

19.1.3 Measures to prevent dust shall include the following:

19.1.3.1the provision of easily cleaned hardstandings for vehicles;

19.1.3.2the enclosure of material stockpiles at all times and damping down of dusty materials, using water sprays during dry weather;

19.1.3.3the hard surfacing of heavily used areas which will be kept clean by regular brushing and water spraying;

19.1.3.4control of dust released from cutting or grinding of materials on the Site; any mobile crushing plant which is used during the Tram Supplier Works shall be appropriately licensed and sited so as to minimise dust annoyance to any persons who may be liable to be affected by emissions; the Tram Supplier shall notify SEPA in advance of any mobile crushing plant being brought onto the Site;

19.1.3.5the complete sheeting of all vehicles carrying spoil and other dusty materials;

19.1.3.6watering of unpaved surfaces and roads; and

19.1.3.7a limit on vehicle speeds on unpaved surfaces of 20 kph.

19.1.4 Where dust generating Tram Supplier Works (such as excavation and demolition) are undertaken close to buildings so that there is a potential for soiling of windows and ledges with dust, the Tram Supplier shall clean such windows and ledges as frequently as is necessary (and as a minimum, at least once per week) during periods of dust generating work and on completion of

TIE00899939_1206

the Tram Supplier Works at that Work Site. The Tram Supplier shall take precautions to prevent damage occurring as a consequence of cleaning works.

19.1.5 The Tram Supplier shall take precautions to prevent the emission of smoke or fumes from construction vehicles, site plant and stored materials including volatile substances. Vehicles and plant shall be well maintained and measures shall be taken by the Tram Supplier to ensure that engines and motors are not left running for long periods when not directly in use.

19.1.6 The engines of all parked vehicles or vehicles waiting to enter any work area shall be switched off within two minutes of arrival.

19.1.7 Work compounds shall be laid out by the Tram Supplier so that accesses and loading areas are located as far away from sensitive neighbours as is practicably possible, and so that temporary structures screen noisy areas where practicable.

19.1.8 There shall be no burning of waste on the Site.

20. DISPOSAL OF WASTE AND CONTAMINATED MATERIALS

20.1 Waste

20.1.1 A waste management plan (**"WMP"**) shall be developed in accordance with "*Site Waste Management Plans: Guidance for Contractors and Clients*" (DTI 2004). The Tram Supplier shall be responsible for the preparation of the WMP to address all of the approvals and consents which require to be obtained and thereafter, the Tram Supplier shall be responsible for the development of the WMP to document the control measures and mitigation measures that shall be implemented. The plan shall in particular identify:

20.1.1.1responsibilities for waste management;

20.1.1.2the types and quantities of waste materials likely to be generated;

20.1.1.3measures to be taken to minimise generation of waste;

20.1.1.4proposals for recycling and/or re-use;

20.1.1.5measures to be adopted for management of waste on the Site including enclosure, segregation, secure storage, sorting for recovery, and other on-site handling;

20.1.1.6proposed treatment and disposal routes; and

20.1.1.7licensing arrangements.

20.1.2 The Tram Supplier shall implement and comply with the WMP.

20.1.3 The Tram Supplier shall undertake monthly audits to demonstrate compliance with Statutory Requirements and the WMP. The Tram Supplier shall set out its audit programme in the WMP and shall provide copies of the audit report to **the Client**.

20.1.4 Spoil or other waste materials arising from the Tram Supplier Works shall be used, wherever reasonably practicable, in the Tram Supplier Works.

20.1.5 The disposal of waste, including any surplus spoil, shall be managed by the Tram Supplier, so far as is reasonably practicable, to maximise the environmental and development benefits from the use of surplus material to minimise the removal of surplus spoil from the Site and to reduce any adverse environmental effects of disposal.

20.2 **Contaminated Land and Materials**

20.2.1 The Tram Supplier shall identify all areas within the Site where contaminated land, including land contaminated by invasive alien species listed in Part 2 of Schedule 9, of the Wildlife and Countryside Act 1981 (as amended), may be encountered. In each of these areas, the Tram Supplier shall:

20.2.1.1carry out appropriate additional site investigations as instructed by **the Client** to the satisfaction of **the Client** and CEC to determine the extent and type of contaminants present on the Site;

20.2.1.2identify potential sources, pathways and receptors and assess the risk of harm to receptors;

20.2.1.3liaise with **the Client,** CEC and SEPA to address their reasonable requirements and to agree control or protection measures necessary for dealing with identified risks;

TIE00899939_1208

20.2.1.4obtain any necessary licences for the storage, treatment and disposal of contaminated material (including dewatering discharge); and

20.2.1.5ensure that removal and disposal of contaminated materials complies with a strict consignment note system and that delivery is to appropriately licensed disposal facilities.

20.2.2 The Tram Supplier shall develop management procedures to be followed in the event that contaminated or hazardous materials are discovered on the Site during construction.

20.2.3 If the Tram Supplier identifies contamination on the Site which has not been previously identified , no further development shall take place (except to the extent that would not disturb that contamination) until a site investigation has been carried out in accordance with paragraph 20.2.1 above.

20.2.4 The Tram Supplier shall comply with the guidance in the Health & Safety Executive document "*Protection of Workers and the General Public during the Development of Contaminated Land*" (1991) and to the DEFRA document "*Helping to Prevent the Spread of Invasive Non-native Species, Horticultural Code of Practice*" (March 2005), in so far as this is reasonably practicable and applicable to the Tram Supplier Works. Invasive alien species listed on Schedule 9, Part II of the Wildlife and Countryside Act 1981 as amended by the Nature Conservation (Scotland Act) 2004, will be treated in accordance with the Environmental Protection Act 1990. Japanese knotweed and giant hogweed and soils containing particles of these plants are regarded as controlled waste.

20.2.5 Appropriate precautions shall be taken if materials containing asbestos are encountered. The Tram Supplier shall observe the exposure limits and measurement methods for asbestos, set out in the Health & Safety Executive Guidance Note EH 10 (2001), and shall also comply with Health & Safety Executive "*Guideline Note MS13 - Asbestos*" (2005), the Health & Safety Commission document "*Approved Code of Practice and Guidance Note Work with Asbestos Insulation, Asbestos Coating and Asbestos Insulating Board*" (2002), in so far as these are applicable to the Tram Supplier Works.

21. PROTECTION OF THE WATER ENVIRONMENT

21.1 Waste Water and Run-off

21.1.1 A construction site drainage plan (**"CSDP"**) shall be prepared, in consultation with SEPA. The Tram Supplier shall be responsible for the preparation of the CSDP to address all of the approvals and consents which require to be obtained. Thereafter, the Tram Supplier shall be responsible for the development of the CSDP to document the control measures and mitigation measures that shall be implemented. The CSDP shall include measures to ensure that surface water runoff is contained and managed appropriately and that appropriate measures are taken to prevent inundation of the Site. "Sustainable Urban Drainage System" (**"SUDS"**) measures shall be included within the Tram Supplier Works where reasonably practicable and applicable, in accordance with Law and the guidance in:

21.1.1.1"*Interim Code of Practice for SUDS*" (CIRIA 2004);

21.1.1.2"*Sustainable Urban Drainage System – Design Manual for Scotland and Northern Ireland*" (CIRIA C521); and

21.1.1.3"*Sustainable Urban Drainage Systems – Best Practice Manual*" (CIRIA C523).

21.1.2 The Tram Supplier shall implement and comply with the CSDP.

21.1.3 The Tram Supplier shall ensure that there shall be no washout from temporary construction laydown and storage areas into watercourses.

21.1.4 No water shall be discharged into watercourses, but shall be stored in settlement lagoons or tanks, or filtered prior to discharge, or discharged onto a grassy area to soak away.

21.1.5 Waste water and site discharges to surface water or sewer shall only be permitted where the effluent quality and discharge location is acceptable to SEPA or Scottish Water (as appropriate). Water Environment (Controlled Activities) (Scotland) Regulations 2005 ("**CAR**") discharge authorisation shall be obtained by the Tram Supplier if required prior to discharge.

21.1.6 The Tram Supplier shall ensure that all treatment facilities are regularly inspected and maintained and that a full record is kept of inspection, maintenance and other measures to maintain equipment performance.

TIE00899939_1210

21.1.7 Approval from SEPA shall be obtained by the Tram Supplier prior to any excavation below the water table, including any site de-watering and discharge. Contact should be made with SEPA at least one month prior to the relevant operation to establish the level of CAR authorisation required. Cut-off ditches may be used to prevent water from entering excavations.

21.1.8 The Tram Supplier shall comply with BS 6031: 1981 "*Code of Practice for Earthworks*", regarding the general control of site drainage is so far as this is applicable to the Tram Supplier Works.

21.1.9 The Tram Supplier shall ensure that areas of exposed ground and stockpiles are minimised to reduce silty runoff. Geotextiles or other equivalent measures shall be used by the Tram Supplier where necessary to prevent silty run-off from soil mounds close to watercourses.

21.1.10 The Tram Supplier shall ensure that any water that has come into contact with contaminated materials is disposed of in accordance with the requirements of SEPA or Scottish Water (as appropriate).

21.1.11 The Tram Supplier shall take suitable precautions to prevent the entry of pollutants into any bodies of water, and report any incidents to SEPA and Scottish Water.

21.1.12 Procedures for responding to potentially polluting incidents or inundation of the site by floodwaters shall be implemented in accordance with SEPA guidance (with reference to paragraph 21.6 below).

21.1.13 Cementicious mixtures are highly alkaline and corrosive and shall be prevented from entering watercourses and drains. The Tram Supplier shall make suitable provision for washing out ready mix concrete lorries, skips, concrete pumps and the like.

21.2 Storage of Polluting Materials

21.2.1 The Tram Supplier shall make provision to ensure that oil drums and containers or other potential contaminants stored on the Site are properly isolated and bunded and that no oil or other contaminants are allowed to reach watercourses or groundwater, including aquifers. Oil storage containers (both fixed and mobile) with a 200 litre capacity or greater shall be stored in compliance with the Water Environment (Oil Storage) (Scotland)

TIE00899939_1211

Regulations 2006, where applicable. Drip trays and other secondary containment measures shall be used by the Tram Supplier where necessary to prevent spills during refuelling and operation of small static and mobile equipment. Storage locations for such materials shall be positioned away from watercourses. All surface water or other contaminated water which accumulates in bunds shall be removed by the Tram Supplier by manually controlled positive lift pumps, and not by means of a gravity drain.

21.2.2 Refuelling shall be carried out by the Tram Supplier in a designated area which is away from watercourses and drains.

21.2.3 Spill response kits containing equipment appropriate to the quantity and types of materials present on site shall be available for use by the Tram Supplier in the event of a fuel spillage. Personnel shall be trained in their use.

21.3 **Protection of Aquifers**

21.3.1 The Tram Supplier shall have due regard for protection of underlying aquifers and adhere to the SEPA "*Groundwater Protection Policy for Scotland*". In all instances, measures to ensure appropriate protection of aquifers shall be undertaken, subject to prior approval of SEPA. Prior approval shall be sought by the Tram Supplier in writing, prior to commencement of the relevant Tram Supplier Works.

21.4 **Control and Management of Foul Drainage**

21.4.1 Where permanent facilities are not accessible foul water and sewage effluents produced by the construction workforce shall be contained by temporary foul drainage facilities. A licensed contractor engaged by the Tram Supplier shall dispose of all foul water collected off-site.

21.5 **Tram Supplier Works in the Vicinity of Water**

21.5.1 The Tram Supplier shall take suitable precautions to prevent the entry of pollutants, including sediments and dusts, into any bodies of water, and report any incidents to SEPA.

21.5.2 Crossings of watercourses shall be constructed by the Tram Supplier so as not to impede the flow, obstruct the movement of floodwater or exacerbate

TIE00899939_1212

erosion of the channel and banks and shall require CAR authorisation from SEPA.

21.5.3 In watercourses which support migratory fish, Tram Supplier Works shall be avoided during upstream and downstream fish migration, spawning, incubation and hatching periods.

21.5.4 Where bankside habitat is temporarily affected, it shall be reinstated by the Tram Supplier to its original form on completion of the Tram Supplier Works at that Work Site.

21.5.5 Areas of bankside adjacent to working areas shall be fenced off during construction to prevent damage to the banksides.

21.5.6 Stripping of surface vegetation near water by the Tram Supplier shall be kept to a minimum. Exposed surfaces shall be seeded or reinstated by the Tram Supplier with vegetation, as soon as is practical after construction in that working area is complete.

21.5.7 Where culverting is required as Temporary Works, such culverting shall be subject to CAR authorisation from SEPA. Culverting that is so authorised shall be designed by the Tram Supplier and constructed to permit the passage of fish and other aquatic fauna under normal flow conditions.

21.6 **Guidance**

21.6.1 The Tram Supplier shall comply with all relevant SEPA "pollution prevention" guidelines, including, but not necessarily limited to:

21.6.1.1PPG1 General guide to the prevention of water pollution.

21.6.1.2PPG2 Above ground oil storage tanks.

21.6.1.3PPG3 The use and design of oil separators.

21.6.1.4PPG4 Disposal of sewage where no mains drainage is available.

21.6.1.5PPG5 Works in, near or liable to affect watercourses.

21.6.1.6PPG6 Working at construction and demolition sites.

TIE00899939_1213

21.6.1.7PPG7 Refuelling facilities

21.6.1.8PPG8 Storage and disposal of used oils.

21.6.1.9PPG13 High pressure water and steam cleaners.

21.6.1.10 PPG18 Control of spillages and fire fighting runoff.

21.6.1.11 PPG19 Garages and vehicle service centres.

21.6.1.12 PPG21 Pollution incident response planning.

21.6.1.13 PPG22 Dealing with spillages on roads.

21.6.1.14 PPG23 Maintenance of structures over water.

21.6.1.15 PPG26 Pollution prevention storage and handling of drums and intermediate bulk containers.

21.7 **Water Environment (Controlled Activity) (Scotland) Regulations 2005**

Without prejudice to the foregoing terms of this paragraph 21, the Tram Supplier shall comply with the terms of CAR where relevant to the Tram Supplier Works.

22. ECOLOGY

22.1 Encroachment into Wildlife Areas

22.1.1 The Tram Supplier shall take all reasonably practicable measures to minimise harm to and disturbance of wildlife caused by noise and vibration, dust and other air pollution, including:

22.1.1.1minimising habitat loss by keeping the working corridor and extent of working areas to the minimum necessary for the Tram Supplier Works; removal of habitats and new planting shall be undertaken in consultation with Scottish Natural Heritage (**"SNH"**), **the Client** and CEC;

22.1.1.2fencing off adjacent habitat to prevent unnecessary incursion or damage; staff shall be made aware of the need to avoid damage to adjacent retained areas;

TIE00899939_1214

22.1.1.3the reinstatement or replacement of areas of habitat disturbed during construction in areas not required for the Tram Supplier Works on completion of the Tram Supplier Works in accordance with the Landscape and Habitat Management Plan (**"LHMP"**). The Tram Supplier shall be responsible for the preparation of the LHMP to address all of the approvals and consents which require to be obtained and thereafter, the Tram Supplier shall be responsible for the development of the LHMP to document the control measures and mitigation measures that shall be implemented ; and

22.1.1.4compliance with the guidelines set out in British Standard (BSI *Code of Practice for Earthworks* (BS6031) in relation to soil stripping, storage and placing.

22.1.2 Approval shall be obtained by the Tram Supplier from **the Client**, SNH, SEPA, Scottish Executive Environment Group Wildlife Habitats Division (**"SEEG WHD"**) and CEC, for detailed method statements for any Tram Supplier Works proposed in designated sites, including Special Protection Areas (SPA)/Ramsar sites, Sites of Special Scientific Interest (SSSI), Sites of Interest for Nature Conservation (SINC) and Wildlife Sites.

22.1.3 Applications for approval shall be made by the Tram Supplier at least one calendar month prior to relevant Tram Supplier Works commencing.

22.2 **Protected Species**

22.2.1 In advance of any Tram Supplier Works, the Tram Supplier shall employ suitably qualified professionals to check all working areas and any land within 30 metres of the boundary of the working area (unless there is a boundary with a private third party within the 30 metres, in which case no checks shall be taken within the private land), or 100m from any piling operations or use of explosives for the presence of species protected by statute. Where protected species are identified, appropriate mitigation measures shall be agreed in advance with the relevant authorities and any appropriate licences obtained in accordance with any requirements for licensing. The Tram Supplier shall implement any mitigation measures agreed in accordance with this paragraph 22.2.1.

22.2.2 Where any habitat has to be cleared in the breeding bird season, typically March to June or July for most species, the habitat must be checked prior to removal for the presence of nesting wild birds, their nests and eggs and young. If found, no habitat shall be removed until nesting is complete, or unless other suitable mitigation is agreed in advance between the Tram Supplier and SNH.

22.2.3 The Tram Supplier shall be responsible for obtaining a licence from SNH for any work that may cause disturbance to a badger or involves the damage or destruction of a sett. Licence applications shall be made for any Tram Supplier Works within 10m, heavy machinery operating within 30m, and for piling or use of explosives within 100m, and no Tram Supplier Works shall proceed until the required licences are obtained. Alternative setts shall be provided in the event of and in advance of any loss.

22.2.4 The Tram Supplier shall be responsible for obtaining a licence from SEEG WHD for any work which may cause disturbance to otters or involve damage or destruction to an otter holt or lying up site or if any Tram Supplier Works are proposed within 30m of an otter holt or lying up site. Alternative holts or lying up sites shall be provided in the event of and in advance of any loss.

22.2.5 The Tram Supplier shall be responsible for ensuring that all bridges and other built structures and mature and dead trees within the working area shall be checked by a licensed bat handler for their use by roosting or hibernating bats prior to felling or other potentially damaging operations. If found, mitigation measures shall be agreed between the Tram Supplier and SNH and SEEGWHD and implemented, including review of the design to seek ways of avoiding loss of the roost. If avoidance is not possible, a licence shall be applied for by the Tram Supplier from SEEG WHD for disturbance to a European Protected Species and / or destruction or damage to a breeding site or resting place. Alternative roost sites shall be provided in advance of any loss. Any loss of feeding habitat shall be compensated for by new habitat creation as detailed in the LHMP. All mitigation measures for protected species shall be installed by the Tram Supplier as early as possible during the construction process so that use can be established at an early stage.

22.2.6 Where appropriate use of mitigation measures by target species will be positively encouraged using a variety of techniques e.g. feeding.

TIE00899939_1216

22.2.7 Permanent mitigation structures for protected species including mammal fencing and tunnels and artificial badger setts shall be checked during construction and approved on completion by a suitably qualified ecologist and reported to SNH. Should these structures not be to the required standard specified, remedial measures shall be taken by the Tram Supplier .

22.2.8 Mitigation shall aim to compensate for loss of foraging specifically for badgers through creation of appropriate grassland and scrub habitat wherever possible within the Limits of Deviation in the Tram Legislation in line with the Civil Aviation Authority Advice Note 3 – "*Potential Bird Hazards from Amenity Landscaping and Building Design*".

22.2.9 The Tram Supplier's personnel and personnel engaged by any Sub-Contractors shall be briefed by a suitably qualified professional on measures for protected species as part of site induction.

22.3 **Protection of Mature Trees**

22.3.1 For the purposes of this paragraph, "trees" are defined as trees with a diameter of over 10cm girth at a height of 1.5 m above ground level.

22.3.2 Loss of trees shall be avoided as far as reasonably practicable. The Tram Supplier shall comply with the guidelines set out in British Standard (BS) 5837:1991 "Trees in Relation to Construction" insofar as these are reasonably practicable and applicable to the Tram Supplier Works.

22.3.3 All tree surgery operations shall comply with the British Standard (BS) 3998 "*Recommendations for Tree Work*" and a method statement addressing safety of workers and the public shall be prepared and implemented.

22.3.4 Felling shall be carried out in accordance with the Forestry Commission document "*Forest and Water Guidelines 2004*", which relates to the influence that woodland and trees can have on the freshwater environment, insofar as this is reasonably practicable and to the extent that they are applicable to the Tram Supplier Works.

22.3.5 Prior to felling, the Tram Supplier shall procure that trees suitable as bat roosts are checked by a licensed bat handler for roosting and hibernating bats, and should any be identified, mitigation measures shall be agreed by the

TIE00899939_1217

Tram Supplier with SNH and SEEG WHD and the Tram Supplier shall obtain any relevant licences.

22.3.6 Woody material generated shall be retained on the Site as far as is reasonably possible and used as part of habitat creation measures.

22.3.7 Adverse effects on all trees within or in the vicinity of the Site shall be minimised by the adoption of suitable mitigation measures. These may include, but shall not be limited to, the following:

22.3.7.1 selective removal of lower branches in an approved manner, to reduce mechanical damage by construction plant;

22.3.7.2 control of construction activities to minimise compaction of the ground beneath the entire canopy of the tree; no heavy materials or plant shall be stored, and construction traffic movements shall be controlled, by fencing or other means, so as to minimise vehicle movement within the canopy;

22.3.7.3 the use of matting around the root zone to minimise soil compaction; and

22.3.7.4 the use of chestnut paling around the trunk to prevent damage.

22.4 **Tree Replacement**

Where trees are removed, damaged or die as a consequence of the Tram Supplier Works, they shall be replaced by the Tram Supplier by at least 2 trees for every one removed, which replacement trees shall be of similar or approved size and in a location as close as possible to the original position. All tree planting shall be agreed with **the Client** and CEC, and shall be in accordance with the LHMP. The supply, storage, handling, planting and maintenance of new planting shall be undertaken in accordance with the appropriate British Standards, including, but not necessarily limited to;

22.4.1 (BS5837) "Trees in Relation to Construction";

22.4.2 (BS3998) "Recommendations for Tree Works"; and

22.4.3 (BS4428) "Code of Practice for General Landscape Operations (excluding hard surfaces)".

22.5 **Control of Invasive and Alien Species**

22.5.1 If any invasive alien species listed in Schedule 9, Part II of the Wildlife and Countryside Act 1981 (as amended), are identified along the route, including Japanese Knotweed (*Fallopia japonica*), Giant Hogweed (*Heracleum mantegazzianum*) or Himalayan Balsam (*Impatiens glandulifera*), a strategy shall be developed and implemented by the Tram Supplier prior to the commencement of the Tram Supplier Works to manage their presence. The strategy will ensure appropriate treatment of invasive alien species in advance of construction in accordance with approved methodology and will prevent the spread of the species within and outside the development area. The soil containing these species or plants thereof shall be dealt with as contaminated material and disposed of in accordance with paragraph 20.2 above;

22.5.2 The Tram Supplier shall comply with the strategy for the control of invasive and alien species.

23. ARCHAEOLOGY AND CULTURAL HERITAGE

23.1 **Archaeological and Heritage Mitigation Plan**

23.1.1 In advance of the commencement of the Tram Supplier Works, an "Archaeological and Heritage Mitigation Plan" (**"AHMP"**) shall be prepared. The Tram Supplier shall be responsible for the preparation of the AHMP to address all of the approvals and consents which require to be obtained and thereafter, the Tram Supplier shall be responsible for the development of the AHMP to document the control measures and mitigation measures that shall be implemented. The AHMP will identify the level of mitigation proposed at each site of archaeological or historic significance (as defined by statute and/or Historic Scotland), taking into account the measures outlined in the Environmental Statements. These may include:

23.1.1.1prior archaeological evaluation by trial excavations;

23.1.1.2a detailed photographic record prior to construction;

23.1.1.3a watching brief during construction;

23.1.1.4a detailed standing building survey and salvage;

TIE00899939_1219

23.1.1.5archaeological excavation;

23.1.1.6preservation in situ;

23.1.1.7further documentary research and archiving; or

23.1.1.8other such measures as may be approved.

23.1.2 The Tram Supplier shall implement and comply with the AHMP.

23.1.3 No development within or immediately adjacent to an area which is, in the opinion of **the Client** and CEC, of known or suspected archaeological importance, shall commence until a scheme to deal with any archaeological remains on the Site has been submitted to and approved by **the Client** and CEC and implemented. The Tram Supplier shall apply for prior approval at least two calendar months in advance of the relevant Tram Supplier Works commencing.

23.1.4 No development within or adjacent to an area which is designated as a Scheduled Ancient Monument shall commence without the Tram Supplier confirming whether Scheduled Monument Consent is required from Historic Scotland, and where necessary obtaining such consent. The AHMP shall identify the Scheduled Ancient Monuments and Listed Buildings which shall be affected, and shall outline the Tram Supplier Works that can take place in proximity to them and will detail the necessary mitigation.

23.1.5 All records obtained through the mitigation shall be lodged with the National Monuments Record of Scotland (**"NMRS"**).

23.1.6 The AHMP shall outline the appropriate procedures that shall be followed should any significant archaeological remains be found during the pre-construction excavations.

23.1.7 Any archaeological works carried out on the Site by the Tram Supplier shall be undertaken by a suitably qualified investigating body acceptable to **the Client** and CEC. The results shall be provided to the property owner and occupier and, in the case of scheduled or listed features, to **the Client,** CEC and Historic Scotland.

23.1.8 The Tram Supplier shall take all reasonable precautions to prevent employees, any Sub-Contractors, their employees, or any other persons from removing or damaging any fossils, coins, articles of value or antiquity, structures or other remains or any other thing of archaeological or historical interest during investigations and during all the Tram Supplier Works. The AHMP shall outline the legal obligations placed on those who discover portable antiquities or disturb human remains.

23.1.9 The Tram Supplier shall appoint a suitably qualified professional person to record the condition of all scheduled and listed buildings and structures or parts thereof, within or adjacent to the construction working areas which are identified as at risk from physical damage or vibration. This will have been carried out in accordance with the Institute of Field Archaeologists Standards and Guidance. The results shall be provided to the property owner and occupier and in the case of scheduled or listed features, to CEC and Historic Scotland.

23.1.10 At least one month prior to commencement of the relevant excavation works, a copy of each survey undertaken under paragraph 23.1.9 above shall be provided by the Tram Supplier to **the Client**, the property owner and occupier and, in the case of scheduled or listed features, to **the Client**, CEC and Historic Scotland.

23.1.11 After the Tram Supplier Works have been completed and at any time up to two years after the opening of the tram, the above parties may, upon providing **the Client** or the Tram Supplier with reasonable evidence of damage, request that a second defects survey is undertaken. Any damage which is identified as being caused by the Tram Supplier Works shall be repaired within a reasonable time of identification at the expense of the Tram Supplier to the reasonable satisfaction of the property owner and such that the property is returned to the standard of repair and stability existing before the Tram Supplier Works commenced.

23.2 **Guidance**

23.2.1 All archaeological investigations, watching briefs or other activities shall be carried out in accordance with the following guidance from the Institute of Field Archaeologists, particularly – but not necessarily limited to standards and guidance for:

23.2.2 field evaluation;

23.2.3 excavation;

23.2.4 archaeological watching brief;

23.2.5 archaeological investigation and recording of standing buildings or structures;

23.2.6 collection, documentation conservation and research of archaeological materials;

23.2.7 the IFA policy statement on Environmental Protection;

23.2.8 the IFA Code of Conduct; and

23.2.9 the British Archaeologists and Developers Liaison Group Code of Practice.

Part 2

PART B - CODE OF MAINTENANCE PRACTICE

1. MANAGEMENT SYSTEMS

1.1 The Tram Supplier shall implement and comply with the following management systems:

1.1.1 a "quality management system" in accordance with ISO 9001;

1.1.2 a "safety management system" in accordance with ISO 18001 or HSG65; and

1.1.3 an "environmental management system" in accordance with ISO 14001.

2. INSTRUCTION AND TRAINING

2.1 The Tram Supplier shall ensure that its employees, Sub-Contractors, agents and others on the Edinburgh Tram Network for whom the Tram Supplier has responsibility undertake a number of inductions. These shall comprise:

2.1.1 specific induction for the Maintenance Services (provided by the Tram Supplier);

2.1.2 worksite and task-specific-induction including a method statement briefing and toolbox talk, (provided by the Tram Supplier).

2.2 Its employees, Sub-Contractors, agents and others on the Edinburgh Tram Network for whom the Tram Supplier has responsibility who have not received the induction, for example visitors, shall be escorted on Edinburgh Tram Network non-public areas at all times by a competent inducted person and receive a site briefing.

2.3 The Tram Supplier shall maintain induction and training records in order that the Operator and **the Client** can inspect them. These records shall identify the scope of the induction and training and the persons who received them.

3. SAFE SYSTEMS

3.1 Risk Assessments

3.1.1 The Tram Supplier shall prepare risk assessments for all work activithe Clients being undertaken by its employees, Sub-Contractors, agents and

TIE00899939_1223

others on the Edinburgh Tram Network for whom the Tram Supplier has responsibility.

3.1.2 Each risk assessment shall include as a minimum the following details:

3.1.2.1 Document control

(a) document title and number;

(b) revision status;

(c) authorisation for use; and

(d) reference to supplementary documentation.

3.1.2.2 identification of any hazards (as a minimum they should address the following – access to the work site, security of the work site, interface with the public, potential for vandalism, interface with the tram system and interface with traffic);

3.1.2.3 identification of those who might be harmed, and how; and

3.1.2.4 an evaluation of the risks and, in relation to each risk, the control measures required to reduce the risk to an appropriate level.

3.2 Method Statements

3.2.1 The Tram Supplier shall prepare method statements for all maintenance activithe Clients to be carried out by Tram Supplier.

3.2.2 Each method statement shall include as a minimum the following details:

3.2.3 Document control

(a) document title and number;

(b) revision status;

(c) authorisation for use; and

(d) reference to supplementary documentation.

3.2.3.1 General information

TIE00899939_1224

(a) description and scope of work;

(b) location and boundaries (including sketch or site plan if appropriate); and

(c) access routes for personnel and materials and equipment.

3.2.3.2 Resources

(a) number and competences of personnel (including function and role);

(b) contacts; and

(c) lines of communication.

3.2.3.3 Details of work activities

(a) detailed work sequence;

(b) plant, equipment and tools to be used;

(c) personal protective equipment required;

(d) delivery requirements;

(e) wastes produced, and means of disposal; and

(f) inspection and testing requirements, including details of:

(i) acceptance criteria;

(ii) quality control checklists and record forms to be used;

(iii) frequencies of inspections and testing; and

(iv) documentation which is required prior to the issue of a handover checklist in accordance with [Clause 52.2] of the Agreement [This reference requires to be aligned with latest Tram Supplier Draft].

TIE00899939_1225

3.2.3.4 Specific control measures

(a) permits and authorisations required; and

(b) temporary amended systems, subject to agreement with the Operator through the appropriate change control arrangements as developed and agreed between the Tram Supplier, the Client and the Operator during the mobilisation phase.

3.2.3.5 Emergency procedures

(a) Evacuation and rescue from locations where Tram Supplier and Subcontractors are performing Maintenance Services

(b) Interface with the Operator / Control Centre and Emergency Services.

3.2.3.6 Supplementary documentation

(a) risk assessments; and

(b) COSHH assessments.

3.2.4 The documentation referred to in paragraph 3.2.2 above shall be developed so that it is specific to the Maintenance Services. The Tram Supplier shall ensure that revisions and updates can be identified .

3.2.5 The Tram Supplier shall issue a copy of its procedure for the production of method statements and risk assessments to **the Client** for approval.

3.3 Access Permit

3.3.1 The Tram Supplier shall comply with the Operator's system, as developed and agreed between the Tram Supplier, the Client and the Operator during the mobilisation phase, for controlling access to undertake work activities as notified to the Tram Supplier by **the Client**, which shall require the Tram Supplier to obtain an approved access permit (**"Access Permit"**) from **the Client** for works that will necessitate interruption or restriction of the Transport Services and all that are safety related.

3.3.2 In so far as not otherwise submitted pursuant to this Agreement, the Tram Supplier shall submit a form for each required Access Permit (**"Access**

TIE00899939_1226

Permit Form") which is required, in accordance with Clause 17.12 of this Agreement to **the Client** in advance of access being required. In the event of emergency works or essential unplanned Maintenance Services a reduced period of notice can be applied in accordance with Clause 17.13 of the Agreement.

3.3.3 The Tram Supplier shall advise **the Client** of the persons within its organisation who are competent to authorise the Access Permit Forms.

3.3.4 Each Access Permit Form shall identify the risk assessments, method statements and permits to work which have been raised under the Tram Supplier's safety management system.

3.3.5 Each Access Permit Form shall identify any requirements for system interruption or isolation.

3.3.6 The Tram Supplier shall agree with **the Client** the "start work date and time" and "stop work date and time" for each work activity or group of work activities to be included in each Access Permit.

3.3.7 The Tram Supplier shall identify within each Access Permit Form any special control measures which require to be implemented including:

3.3.7.1 requirement for a temporary speed restriction;

3.3.7.2 requirement for alteration or disablement of traffic signals ;

3.3.7.3 traffic management requirements under Chapter 8 of the UK traffic signs manual for segregating the work sites from the operational Edinburgh Tram Network or road traffic; and

3.3.7.4 requirement to undertake works outwith the conditions included within the noise and vibration policy referred to in the Tram Legislation.

3.3.7.5 Temporary modifications. These are subject to Change Control agreement with the Operator.

3.3.8 On completion of the work activity or group of work activities, or the "stop work time" (which ever is sooner) the Tram Supplier shall return the relevant Access Permit to **the Client** for cancellation.

3.3.9 The Tram Supplier's authorised persons shall be required to undergo training by **the Client** (with the input of the Operator) in the operation of the Access Permit system.

3.4 Permits to Work

3.4.1 The Tram Supplier shall implement a "permit to work" system for the following activities as a minimum:

3.4.1.1 breaking the ground;

3.4.1.2 hot works;

3.4.1.3 entry into confined spaces;

3.4.1.4 work affecting services;

3.4.1.5 access to live facilities; and

3.4.1.6 works on private land controlled by third parties.

3.4.2 The Tram Supplier shall implement a procedure for managing third party permits to work.

3.4.3 The Tram Supplier shall issue a copy of its permit to work procedures to **the Client** for approval.

3.4.4 The Tram Supplier shall advise the Operator and **the Client** of the competent persons within its organisation who shall be competent to authorise permits to work.

3.5 Personal Protective Equipment

3.5.1 The Tram Supplier shall provide all necessary personal protective equipment (**"PPE"**) for its employees and provide them with all necessary information, instruction and training on its use.

3.5.2 The Tram Supplier shall ensure that all persons on any Work Site (including any representatives of the Operator, **the Client** and visitors) wear the necessary PPE.

TIE00899939_1228

3.5.3 **the Client**'s specific requirements for PPE with regard to particular tasks are as follows:

3.5.3.1 yellow high visibility clothing to comply with BS EN 471:1994, which shall be worn at all times when working on the Edinburgh Tram Network or roads.

3.5.3.2 orange high visibility clothing complying with GO/RT 3279 shall be worn where any works are carried out on railway land.

4. REPORTING

4.1 The Tram Supplier shall report the following information to the Operator and **the Client** within 24 hours and as soon as reasonably practicable of the event occurring:

4.1.1 details of any accident or incident which requires notification to the Health & Safety Executive (the Tram Supplier shall copy all notifications in full to the Operator and to **the Client**);

4.1.2 details of any environmental event which requires notification to the Scottish Environmental Protection Agency (**"SEPA"**);

4.1.3 details of any visit by either the Health & Safety Executive or SEPA, together with details of any report issued or enforcement action that resulted; and

4.1.4 details of any incidents or near misses.

4.2 The Tram Supplier shall report the following information to **the Client** and, if requested by **the Client**, to any other relevant third party on a four weekly reporting cycle:

4.2.1 details of any accident investigation reports raised by **the Client** including details of corrective and preventative actions which have been taken;

4.2.2 the accident frequency rate (**"AFR"**) for the Maintenance Services (including details of total hours worked and number of persons employed);

4.2.3 a summary of the monitoring and internal auditing activities undertaken by the Tram Supplier in the period, including details of any corrective or preventative actions raised or closed out; and

TIE00899939_1229

4.2.4 details of the programme of monitoring and auditing planned for the subsequent four-weekly period.

5. AUDITING AND MONITORING

5.1 The Tram Supplier shall be responsible for carrying out and recording, auditing and monitoring of its maintenance work activities.

5.2 **the Client** any other party reasonably requested by **the Client** may undertake auditing and monitoring of the Tram Supplier's maintenance work activities, and the Tram Supplier shall action any findings which are raised **the Client** or the relevant other party.

6. NON-CONFORMANCE, COMPLAINTS AND DISCIPLINARY MATTERS

6.1 **the Client** shall implement a process for recording and processing breaches by the Tram Supplier of the requirements of this Part B of Schedule 3 (*Code of Construction Practice and Code of Maintenance Practice*) and complaints.

6.2 The following represent a backstop, the Tram Supplier response times are detailed in clause 52 of the Tram Supplier Agreement and the target correction times for these events are contained in Section 40 of the Employers Requirements.

6.3 The Tram Supplier shall take such steps as are required by **the Client** to remedy any such infringement or address any such complaint and the following priority levels for action shall apply:

Level of Urgency	Category of Notification	Required Response Time
1	High urgency. Involves an immediate threat to persons or property or the circumstances otherwise require immediate rectification.	Immediate action required as detailed in Clause 52 of the Agreement. If response is not initiated and actions commenced to resolve the issue by the Tram Supplier within 4 hours, **the Client** may procure that the relevant work is carried out and the costs of so doing shall be recovered from the Tram Supplier .
2	Medium urgency. No immediate threat to persons or property, but there is an impact o n the delivery of the Transport Services, require rectification within 24 hours.	Remedial action requires to be initiated and actions commenced to resolve the issue within 24 hours. If the Tram Supplier does not take this action, **the Client** may procure that the relevant work is carried out and the costs

Level of Urgency	Category of Notification	Required Response Time
		of so doing shall be recovered from the Tram Supplier .

If the Tram Supplier fails to take any remedial action required by **the Client** pursuant to the table above, **the Client** shall be entitled to employ and pay other persons to carry out the same and all costs incurred by **the Client** shall be recoverable from the Tram Supplier by **the Client** and may be deducted by **the Client** from any monies due or to become due to the Tram Supplier or, alternatively, recoverable from the Tram Supplier as a debt

7. IDENTIFICATION

7.1 The Tram Supplier shall ensure that all staff undertaking Maintenance Services are easily identifiable to the public by use of photo identity cards.

7.2 The Tram Supplier shall ensure that all personnel undertaking maintenance activities identify their employer by means of their company logo on their high visibility and protective clothing and, if applicable to be worn according to the task being completed, on their safety helmet.

8. SITE ARRANGEMENTS

8.1 Site Housekeeping (excluding Depot)

8.1.1 A 'good housekeeping' policy shall be applied by the Tram Supplier at all times; this shall include, but not necessarily be limited to, the following requirements:

8.1.1.1 all working areas, including offices, shall be kept in a clean and tidy condition;

8.1.1.2 all working areas shall be a no-smoking area; specific areas within the Site shall be designated as smoking areas and shall be equipped with containers for smoking waste; these shall not be located at the boundary of the Site and adjacent to neighbouring land;

8.1.1.3 open fires shall be prohibited at all times;

TIE00899939_1231

8.1.1.4 all necessary measures shall be taken to minimise the risk of fire and the Tram Supplier shall comply with the requirements of the local fire authority;

8.1.1.5 radios (other than two-way radios used for the purposes of communication related to the Maintenance Services) and other forms of audio equipment shall not be operated on the Site;

8.1.1.6 any waste susceptible to spreading by wind or liable to cause litter shall be stored in enclosed containers;

8.1.1.7 rubbish shall be removed at frequent intervals and the Site kept clean and tidy;

8.1.1.8 eating and drinking shall only be permitted within the Tram Supplier's designated welfare area unless required due to the specific nature and location of the works being undertaken, in which case appropriate arrangements must be made;

8.1.1.9 adequate toilet facilities shall be provided for all maintenance staff;

8.1.1.10 food waste shall be removed frequently;

8.1.1.11 the Tram Supplier's personnel (including any Sub-Contractors) shall be required to conform to a reasonable dress code;

8.1.1.12 any behaviour that is lewd or likely to cause offence shall not be permitted; and adequate supervision must be provided by Tram Supplier with swift follow-up and disciplinary action taken in accordance with the Tram Supplier disciplinary procedure of any breaches;

8.1.2 The Tram Supplier shall inspect all working areas weekly or as otherwise agreed and shall provide a four weekly written report on compliance with paragraph 8.1.1 above. **the Client** or any other party authorised by it may at reasonable times visit the Site without prior notice of time and place of the visit. Access to all areas of the Maintenance Services shall be given to visiting inspectors and the Tram Supplier shall give inspectors all reasonable assistance during their Site inspection.

8.2 Temporary Fencing

8.2.1 The Tram Supplier shall ensure that where appropriate, all working areas are sufficiently and adequately protected to prevent the public and animals from straying on to the working area;, A risk assessment shall determine the need for any temporary fencing around work sites.

8.2.2 All temporary fencing shall comply with Chapter 8 of the [Traffic Sign Manual].

All access and egress to worksites shall be via designated positions within the temporary fencing, which shall remain closed and secured when not in use.

8.2.3 All temporary fencing that creates poorly lit pedestrian routes shall have appropriate lighting fitted by the Tram Supplier, and these shall be illuminated at all times when the adjacent street lighting is lit.

8.2.4 The Tram Supplier shall ensure that the location and design of temporary fencing and temporary structures on the public road shall permit adequate visibility at junctions and proper forward visibility along the roads in accordance with the National Roads Directorate advice notes and the requirements of CEC.

8.2.5 All temporary fencing shall be maintained by the Tram Supplier in a neat and tidy condition at all times, 24 hours, 7 days a week responding within a maximum of 1 hour to any reported problems with the temporary fencing.

8.2.6 The Tram Supplier shall be expressly prohibited from displaying or allowing to be displayed any advertisement or notice including illicit bill or fly posting on the temporary fencing. The Tram Supplier shall ensure that all graffiti, fly posting or defacement to the temporary fencing is removed and made good or obscured within 24 hours.

8.2.7 All temporary fencing shall be removed as soon as reasonably practicable after the completion of any part of the Maintenance Services.

8.3 Lighting and Visual Intrusion

8.3.1 Site lighting shall be positioned and directed by the Tram Supplier so as to minimise nuisance to residents and to minimise distractions or confusion to

TIE00899939_1233

passing drivers on adjoining public roads. This provision shall apply particularly to working areas where work after dark will be carried out and the Tram Supplier shall provide appropriate lighting for these sites. Lighting shall be removed as soon as is consistent with the safe and efficient operation of each Work Site.

8.3.2 So far as is reasonably practicable, all power to temporary traffic signals, lighting and the like shall be taken from mains supplies rather than portable generators. Where portable generators are used to provide power to temporary traffic signals, lighting and the like the Tram Supplier shall ensure Good Industry Practice is followed to minimise noise and pollution from such generators.

8.3.3 The Tram Supplier shall comply with the Institute of Lighting Engineers' document *Guidance Notes on Reduction of Light Pollution 2000* in so far as is reasonably practicable and applicable to the Tram Supplier .

8.4 Access and Loading

8.4.1 The Tram Supplier shall ensure that lorries shall enter and exit the Site in a forward direction at designated locations, except where space restriction does not permit this. If the reversing of vehicles into public spaces is required, then a responsible person observing the rear of the vehicle shall properly control the movement. The sounding of audible reversing alarms shall not be permitted outside normal working hours, except where this has been approved by **the Client** and CEC in connection with the Maintenance Services. Entry and exit conditions shall be subject to prior approval by **the Client**, CEC and the Lothian and Borders Police before implementation.

8.4.2 Access to and egress from the Site shall be carried out by initiating a left turn wherever reasonably practicable.

8.4.3 All loading and unloading of vehicles shall take place off the public road as far as is reasonably practicable.

8.5 **Living Accommodation**

8.5.1 No living accommodation shall be provided by the Tram Supplier within any maintenance working area. Mess rooms, locker rooms, toilets and showers shall be permitted at designated positions agreed with **the Client**.

8.6 Clearance of Maintenance Work Site on Completion

8.6.1 The Tram Supplier shall clear and clean all working areas and accesses as work proceeds and when no longer required for the carrying out of the Maintenance Services.

8.6.2 All surplus materials, rubbish, Temporary Works, Tram Supplier's Equipment, and temporary fencing shall be removed, and the surface of the ground restored as near as reasonably practicable to its original condition, or to such condition as has previously been agreed with **the Client** in accordance with this Agreement.

8.7 Pest Control

8.7.1 The Tram Supplier shall ensure that the risk of infestation by pests or vermin is minimised by adequate arrangements for the disposal of food waste or other material attractive to pests. If infestation occurs, the Tram Supplier shall take such action to deal with it as required by **the Client**.

9. REQUIREMENTS RELATING TO WORKS AFFECTING EDINBURGH AIRPORT

9.1 The Tram Supplier shall have regard to, and comply (where relevant) with all BAA and CAA guidelines when working on or adjacent to [Edinburgh Airport].

9.2 For Maintenance Services to be carried at Edinburgh airport, the Tram Supplier shall prepare for approval by **the Client** and any other party reasonably requested by **the Client** a "Construction Management Strategy" as defined within CAA Safeguarding of Aerodromes Advice Note 4 (Cranes and Other Construction Issues). The Construction Management Strategy shall address as a minimum the following issues:

9.2.1 use of cranes or other tall construction equipment;

9.2.2 control of activities likely to produce dust or smoke clouds

9.2.3 the design of temporary lighting to avoid distracting pilots (see CAA Safeguarding of Aerodromes Advice Note 2 Lighting near Aerodromes);

9.2.4 storage of materials, particularly compliance with height limits;

9.2.5 control and disposal of waste, to prevent attraction of birds; and

9.2.6 site restoration, to prevent attraction of birds.

10. REQUIREMENTS RELATING TO WORKS AFFECTING THE RAILWAY

10.1 The Tram Supplier, where working in proximity to Network Rail infrastructure, shall comply with the reasonable requirements of Network Rail necessary in relation to railway safeguarding and at all times keep **the Client** and the Operator informed of any and all dealings with Network Rail.

11. REQUIREMENTS RELATING TO WORKS AFFECTING OTHER THIRD PARTIES

11.1 The Tram Supplier shall comply with the reasonable requirements of other affected third parties in relation to procedural requirements e.g. notifications, implementation of Permit to Work systems as defined within Third Party Agreements or as may be reasonably required by **the Client**.

12. ROADS AND FOOTPATHS, CYCLEWAYS AND BRIDLEWAYS

12.1 General

12.1.1 The measures to be taken with respect to traffic and road safety shall include, but not necessarily be limited to: [Note: It is not clear whether the Client or Tram Supplier are responsible for the list which follows.]

12.1.1.1use of TTROs; the Tram Supplier shall consult with **the Client** and other third parties notified by **the Client** on the arrangements for agreeing and implementing TTROs to facilitate road closures and the like; the use of TTROs shall take into account the requirement for, and availability of, suitable alternative routes; and

12.1.1.2use of temporary signing to restrict vehicle types and sizes and define routes for construction traffic;

12.1.1.3use of appropriate temporary signing and lighting wherever the Maintenance Services are in progress to ensure the safety of all road users; and

12.1.1.4preparation and implementation of a programme agreed by the Tram Supplier with **the Client** and CEC for road closures and temporary traffic signal arrangements.

12.2 Temporary Road Closures And Diversions

12.2.1 The Tram Supplier shall finalise the arrangements for required closures and diversions of specified roads, footpaths and cycle ways with **the Client**, the Operator, CEC and where roads, footpaths and cycle ways at Edinburgh Airport, BAA, any private landowner or relevant bus operator.

12.2.2 Before closing or otherwise interfering with any street or footpath to which the public has access, the Tram Supplier shall make such arrangements with **the Client**, and if requested by **the Client**, with the Operator and CEC as may be reasonably necessary to cause as little interference with the traffic in that street or footpath during the Maintenance Services as shall be reasonably practicable.

12.2.3 Pedestrian access to properties shall be maintained at all times where reasonably practicable, unless otherwise agreed with **the Client**, and if requested by **the Client**, with the Operator and CEC and the owners and tenants of affected properties. Access to and from public facilities shall be maintained at all times unless otherwise agreed with the relevant administrating bodies.

12.2.4 Wherever the Maintenance Services interfere with the existing public or private roads or other ways over which there is a public or private right of way for any traffic, the Tram Supplier shall construct diversion ways as necessary. The standard of construction and lighting shall be suitable in all respects for the class or classes of traffic using the existing ways and the widths of the diversions shall not be less than that of the existing way unless otherwise agreed with the Tram Supplier, and, if requested by **the Client**, with the Operator and CEC or the owner of the private road.

12.2.5 Diversion routes shall be constructed in advance of any interference with the existing ways, shall be kept as short as reasonably practicable and shall be maintained by the Tram Supplier to provide adequately for the traffic flows. All diversion routes shall be removed and the road returned to **the Client** and CEC as soon as is reasonably practical after completion of the Maintenance Services. Liaison shall be undertaken with **the Client** and CEC regarding any special events such as the Edinburgh Festival, Christmas, New Year, sporting events and filming which might interact with the diversions.

TIE00899939_1237

12.2.6 Adequate horizontal clearance of 0.6 metres minimum shall be provided from the kerb line, to avoid fouling by vehicles. The minimum headroom beneath any projection over the road shall be 5.3 metres.

12.3 Parking Provision for Construction Traffic

12.3.1 Areas and locations of parking provision for site and construction traffic shall be agreed by the Tram Supplier with **the Client** and CEC prior to the commencement of the Maintenance Services.

12.4 Maintenance and Repair of the Road

12.4.1 The Tram Supplier shall take every reasonable precaution to prevent its operations from unnecessarily damaging the roads and footpaths within the Site and in the vicinity of the Maintenance Services.

12.4.2 The Tram Supplier shall carry out all Maintenance Services as are necessary to maintain the roads and footpaths affected by the Maintenance Services in a safe and serviceable condition to the reasonable satisfaction of **the Client**, the Operator and CEC.

12.4.3 Reinstatements of the road shall be carried out in accordance with the RAUC(S) "*Specification for the Reinstatement for Openings of Roads*", October 2003.

12.5 Existing Street Furniture

12.5.1 No street furniture or other features within the vicinity of the Site and the Maintenance Services, but outwith the area covered by the Tram Legislation shall be unnecessarily disturbed or altered by the Maintenance Services. Any damage to street furniture consequent upon construction activities connected with the Maintenance Services shall be reported to **the Client** and the appropriate owner or authority (unless the appropriate owner cannot be identified) immediately on discovery of the damage. Any damage shall be replaced or made good as soon as practicably possible and to the reasonable satisfaction of the owner of the street furniture or other feature.

12.5.2 Any street furniture or other obstructions outside the area to be occupied by the Tram Supplier but which are required to be moved in order to gain access to the Maintenance Services shall, subject to the prior consent of the owner

TIE00899939_1238

thereof, be removed and reinstated or replaced as appropriate, on completion of the Maintenance Services. Any costs associated therewith shall be borne by the Tram Supplier, including the costs of reinstatement or replacement.

12.6 Vehicle Movements and Access to the Site

12.6.1 The Tram Supplier and its Sub-Contractors and suppliers moving loads, construction plant, materials and spoil (including vehicles used for carrying such when empty) shall limit the use of the public roads for such purposes as far as reasonably practicable.

12.6.2 All access routes shall be agreed with **the Client** and CEC prior to the commencement of the relevant part of the Tram Supplier Works.

12.6.3 Access (which is deemed to include both the route and entrance to any Work Site) by lorries shall be as agreed with **the Client**, CEC and the Lothian and Borders Police. Access to and egress from the Site shall be carried out by initiating a left turn wherever reasonably practicable.

12.6.4 All vehicles operating on the Site shall be fitted with roof mounted yellow flashing beacons and reversing alarms and these shall be used.

12.6.5 The Tram Supplier shall take all reasonable measures to ensure that delivery vehicles do not remain stationary on the road unnecessarily prior to entering the Site. In exceptional circumstances, for example where the Site is very constrained, it may be necessary to have the potential for a limited number of vehicles to stand on the road. The location of such standing areas their size and the duration of any standing periods shall be subject to prior agreement with **the Client,** CEC and the Lothian and Borders Police.

12.6.6 The Tram Supplier shall ascertain and comply with any restrictions in respect of abnormal load routes as they may affect access to the Site.

12.7 Provision, Erection and Maintenance of Traffic Safety and Control (Traffic Safety Measures)

12.7.1 The Tram Supplier shall provide, erect and maintain such traffic signs, road markings, lamps, barriers and traffic control signals and such other measures as may be necessitated by Maintenance Services in accordance with the requirements of the Agreement and to the approval of **the Client**, the

TIE00899939_1239

Operator and CEC. The Tram Supplier shall not commence any work which affects the public road until all traffic safety measures necessitated by the work are fully operational.

12.7.2 The Tram Supplier shall keep clean and legible at all times all traffic signs, road markings, lamps, barriers and traffic control signals and shall position, replace, reposition, cover or remove them as required by the progress of the Maintenance Services and to the reasonable requirements of **the Client**, the Operator and CEC.

12.7.3 The Tram Supplier shall ensure that all barriers, footpath space and temporary footpaths (including the requirement for kerb ramps where use has to be made of the carriageway) shall comply with the requirements of the document *Inclusive Mobility A Guide to Best Practice on Access to Pedestrian and Transport Infrastructure* issued by the Mobility and Inclusion Unit of the Department for Transport.

12.7.4 Where portable generators are used to provide power to temporary traffic signals, lighting and the like the Tram Supplier shall ensure Good Industry Best practice be followed to minimise noise and pollution from such generators.

12.8 Implementation of the Closure of Roads and Access to Frontages

12.8.1 The Tram Supplier shall not close any roads or private accesses until immediately before the area is required for undertaking the Maintenance Services in accordance with this Agreement and the Maintenance Programme. The Maintenance Services shall follow in the area of a temporary closure expeditiously and shall be carried out efficiently and in a continuous manner to ensure that all temporary closures are re-opened as quickly as possible.

12.8.2 The Tram Supplier shall, in carrying out the Maintenance Services, take all reasonable precautions to prevent or reduce any disturbance or inconvenience to the owners, tenants or occupiers of adjacent properties, and to the public generally. The owners, tenants or occupiers of affected properties shall be informed of the Maintenance Services to be undertaken, their planned duration, road and access closures and alternative access routes (where required) in writing and by locally posted public notices at least one calendar month prior to work starting.

12.8.3 The Tram Supplier shall render all necessary assistance to occupiers of premises affected by the Maintenance Services so as to enable them to accept and send out deliveries to and from their premises during their normal working hours.

12.9 Access for Emergency Vehicles

12.9.1 During Maintenance Services involving any likely disruption to roads and access routes the Tram Supplier shall propose suitable access routes for emergency service vehicles and personnel to gain access to the Edinburgh Tram Network. These shall be agreed by the Tram Supplier with **the Client**, Emergency Services, the Operator and CEC prior to the start of the Maintenance Services.

13. NOISE

13.1 Noise Control

13.1.1 The Tram Supplier shall take all reasonably practicable measures to minimise nuisance from noise.

13.2 Communications Regarding Noise

13.2.1 Except in the case of emergency work, the Tram Supplier shall give seven days notice to local residents who may be adversely affected by noise from the proposed programme of Maintenance Services, providing a description of the work to be carried out, measures that will be taken to control noise or other disturbance, and the proposed hours of working.

14. VIBRATION

14.1 Vibration Control

14.1.1 The Tram Supplier shall take all reasonably practicable measures to minimise damage caused due to vibration.

15. DUST AND AIR POLLUTION

15.1 Dust and Other Air Pollution

15.1.1 The Tram Supplier shall take all necessary measures to avoid creating a dust nuisance during the Maintenance Services.

15.1.2 Particular consideration shall be given by the Tram Supplier to works affecting the operations of Edinburgh Airport Limited. Details of the specific mitigation measures shall be included within the Construction Management Strategy identified under paragraph 9.2 above.

15.1.3 Measures to prevent dust shall include the following:

15.1.3.1 the hard surfacing of heavily used areas which will be kept clean by regular brushing and water spraying;

15.1.3.2 control of dust released from cutting or grinding of materials on the Maintenance Services;

15.1.3.3 the complete sheeting of all vehicles carrying dusty materials;

15.1.4 Where dust generating works are undertaken close to buildings so that there is soiling of windows and ledges with dust, the Tram Supplier shall clean such windows and ledges as frequently as is necessary (and as a minimum, at least once per week) during periods of dust generating work and on completion of the Maintenance Services at that location. The Tram Supplier shall take precautions to prevent damage occurring as a consequence of cleaning works.

15.1.5 The Tram Supplier shall take precautions to prevent the emission of smoke or fumes from vehicles and plant. Vehicles and plant shall be well maintained and measures shall be taken by the Tram Supplier to ensure that engines and motors are not left running for long periods when not directly in use.

16. DISPOSAL OF WASTE AND CONTAMINATED MATERIALS

16.1 Waste

16.1.1 A waste management plan (**"WMP"**) shall be developed in accordance with "*Site Waste Management Plans: Guidance for Contractors and Clients*" (DTI 2004). The Tram Supplier shall be responsible for the preparation of the WMP to address all of the approvals and consents which require to be obtained and the control measures and mitigation measures that shall be implemented. The WMP shall be subject to the approval of the Operator and **the Client**. The WMP shall in particular identify:

16.1.1.1 responsibilities for waste management;

16.1.1.2the types and quantities of waste materials likely to be generated;

16.1.1.3measures to be taken to minimise generation of waste;

16.1.1.4proposals for recycling and/or re-use;

16.1.1.5measures to be adopted for management of waste on the Site including enclosure, segregation, secure storage, sorting for recovery, and other on-site handling;

16.1.1.6proposed treatment and disposal routes; and

16.1.1.7licensing arrangements.

16.1.2 The Tram Supplier shall implement and comply with the WMP.

16.1.3 The Tram Supplier shall undertake monthly audits to demonstrate compliance with Statutory Requirements and the WMP. The Tram Supplier shall set out its audit programme in the WMP and shall provide copies of the audit report to the Operator and Tram Supplier.

17. PROTECTION OF THE WATER ENVIRONMENT

17.1 Waste Water and Run-off

17.1.1 The Tram Supplier shall ensure that by means of well maintained interceptors or other suitable means there shall be no contamination of run-off water by the Maintenance Services that makes its way into watercourses.

17.1.2 No water shall be discharged into watercourses, but shall be filtered prior to discharge, or discharged onto a grassy area to soak away.

17.1.3 Waste water and site discharges to surface water or sewer shall only be permitted where the effluent quality and discharge location is acceptable to SEPA or Scottish Water (as appropriate). Water Environment (Controlled Activities) (Scotland) Regulations 2005 ("CAR") discharge authorisation shall be obtained by the Tram Supplier if required prior to discharge.

17.1.4 The Tram Supplier shall take suitable precautions to prevent the entry of pollutants into any bodies of water, and report any incidents to SEPA and Scottish Water.

17.1.5 Procedures for responding to potentially polluting shall be implemented in accordance with SEPA guidance.

17.2 Storage of Polluting Materials

17.2.1 The Tram Supplier shall make provision to ensure that oil drums and containers or other potential contaminants are properly isolated and bunded and that no oil or other contaminants are allowed to reach watercourses or groundwater, including aquifers. Oil storage containers (both fixed and mobile) with a 200 litre capacity or greater shall be stored in compliance with the Water Environment (Oil Storage) (Scotland) Regulations 2006 (where applicable). Drip trays and other secondary containment measures shall be used by the Tram Supplier where necessary to prevent spills during refuelling and operation of small static and mobile equipment. Storage locations for such materials shall be positioned away from watercourses. All surface water or other contaminated water which accumulates in bunds shall be removed by the Tram Supplier by manually controlled positive lift pumps, and not by means of a gravity drain.

17.2.2 Refuelling shall be carried out by the Tram Supplier in a designated area which is away from watercourses and drains.

17.2.3 Spill response kits containing equipment appropriate to the quantity and types of materials present on site shall be available for use by the Tram Supplier in the event of a fuel spillage. Personnel shall be trained in their use.

17.3 Works in the Vicinity of Water

17.3.1 The Tram Supplier shall take suitable precautions to prevent the entry of pollutants, including sediments and dusts, into any bodies of water, and report any incidents to SEPA.

17.4 Water Environment (Controlled Activity) (Scotland) Regulations 2005

Without prejudice to the foregoing terms of this paragraph 17 , the Tram Supplier shall comply with the terms of CAR where relevant to the Tram Supplier.

18. ECOLOGY

18.1 Encroachment into Wildlife Areas

18.1.1 The Tram Supplier shall take all reasonably practicable measures to minimise harm to and disturbance of wildlife caused by noise and vibration, dust and other air pollution.

18.1.2 Approval shall be obtained by the Tram Supplier from Scottish Natural Heritage, SEPA, Scottish Executive Environment Group Wildlife Habitats Division ("**SEEG WHD**") and CEC, for detailed method statements for any Maintenance Services proposed at designated sites, including Special Protection Areas ("**SPA**")/'Ramsar' sites, Sites of Special Scientific Interest ("**SSSI**"), Sites of Interest for Nature Conservation ("**SINC**") and wildlife sites.

18.1.3 Where reasonably practicable, applications for approval shall be made by the Tram Supplier at least one calendar month prior to relevant Maintenance Services commencing.

18.2 Protected Species

18.2.1 In advance of any disruptive to the environment non-routine works, the Tram Supplier shall employ suitably qualified professionals to check all working areas and any land within 30 metres of the boundary of the working area (unless there is a boundary with a private third party within the 30 metres, in which case no checks shall be taken within the private land) for the presence of species protected by statute. Where protected species are identified, appropriate mitigation measures shall be agreed between the Tram Supplier and the relevant authorities.

18.2.2 Where any habitat has to be cleared in the breeding bird season, typically March to June or July for most species, the habitat must be checked by the Tram Supplier prior to removal for the presence of nesting wild birds, their nests and eggs and young. If found, no habitat shall be removed until nesting is complete, or unless other suitable mitigation is agreed in advance between the Tram Supplier and Scottish Natural Heritage.

18.2.3 The Tram Supplier shall be responsible for obtaining a licence from Scottish Natural Heritage for any non-routine work that may cause disturbance to a

TIE00899939_1245

badger or involves the damage or destruction of a sett. Licence applications shall be made by the Tram Supplier for any works within 10m, heavy machinery operating within 30m, and no works shall proceed until the required licences are obtained.

18.2.4 The Tram Supplier shall be responsible for obtaining a licence from SEEG WHD for any non-routine work which may cause disturbance to otters or involve damage or destruction to an otter holt or lying up site or if any Maintenance Services are proposed within 30m of an otter holt or lying up site.

18.2.5 The Tram Supplier shall be responsible for ensuring that all bridges and other built structures and mature and dead trees within the working area shall be checked by a licensed bat handler for their use by roosting or hibernating bats prior to felling or other potentially damaging operations. If found, mitigation measures shall be agreed between the Tram Supplier, Scottish Natural Heritage and SEEG WHD and implemented, including review of the design to seek ways of avoiding loss of the roost. If avoidance is not possible, a licence shall be applied for by the Tram Supplier from SEEG WHD for disturbance to a European Protected Species and / or destruction or damage to a breeding site or resting place. Alternative roost sites shall be provided in advance of any loss. Any permanent loss of feeding habitat shall be discussed between the Tram Supplier and **the Client** and agreement shall be reached as to how to compensate for by providing new habitat creation as detailed in the landscape and habitat management plan prepared and issued to the Tram Supplier by **the Client**.

18.2.6 Where appropriate use of mitigation measures by target species will be positively encouraged using a variety of techniques e.g. feeding.

18.2.7 The Tram Supplier's personnel and personnel engaged by any Sub-Contractors shall be briefed by a suitably qualified professional on measures for protected species as part of site induction.

18.3 Protection of Mature Trees

18.3.1 For the purposes of this paragraph, "trees" are defined as trees with a diameter of over 10cm girth at a height of 1.5 m above ground level.

TIE00899939_1246

18.3.2 All tree surgery operations shall comply with the British Standard (BS) 3998 "*Recommendations for Tree Work*" and a method statement addressing safety of workers and the public shall be prepared by the Tram Supplier and implemented.

18.3.3 Felling shall be carried out in accordance with the Forestry Commission document "*Forest and Water Guidelines 2004*", which relates to the influence that woodland and trees can have on the freshwater environment, insofar as this is reasonably practicable and to the extent that they are applicable to the Maintenance Services.

18.3.4 Prior to felling, the Tram Supplier shall procure that trees suitable as bat roosts shall be checked by a licensed bat handler for roosting and hibernating bats, and should any be identified, mitigation measures shall be agreed by the Tram Supplier with Scottish Natural Heritage and SEEG WHD and the Tram Supplier shall obtain any relevant licences.

18.3.5 Woody material generated shall be retained on the site as far as is reasonably possible and used as part of habitat creation measures.

18.4 Control of Invasive and Alien Species

18.4.1 If any invasive alien species listed in Schedule 9, Part II of the Wildlife and Countryside Act 1981 (as amended), are identified along the route, including Japanese Knotweed (*Fallopia japonica*), Giant Hogweed (*Heracleum mantegazzianum*) or Himalayan Balsam (*Impatiens glandulifera*), the Tram Supplier shall develop a strategy to manage their presence. The strategy will ensure appropriate treatment of invasive alien species in accordance with approved methodology and will prevent the spread of the species within and outside the Edinburgh Tram Network

18.4.2 The Tram Supplier shall comply with the DEFRA document "*Helping to Prevent the Spread of Invasive Non-native Species, Horticultural Code of Practice*" (March 2005), in so far as this is reasonably practicable and applicable to the Maintenance Services. Invasive alien species listed on Schedule 9, Part II of the Wildlife and Countryside Act 1981 as amended by the Nature Conservation (Scotland Act) 2004, will be treated in accordance with the Environmental Protection Act 1990. Japanese knotweed and giant

hogweed and soils containing particles of these plants are regarded as controlled waste.

[redacted]

Director/Authorised Signatory
tie LIMITED

[redacted]

Director/Authorised Signatory
CONSTRUCCIONES Y AUXILIAR DE FERROCARRILES S.A. (CAF)

This is Schedule 18 referred to in the foregoing Tram Supply Agreement between tie Limited and Construcciones Y Auxiliar de Ferrocarriles S.A. (CAF)

SCHEDULE 18

SUB-CONTRACTOR DIRECT AGREEMENT

(1) [SUB-CONTRACTOR]

- and -

(2) [tie LIMITED] or [*OTHER THIRD PARTY BENEFICIARY*]

- and -

(3) CONSTRUCCIONES Y AUXILIAR DE FERROCARRILES S.A. (CAF)

SUB-CONTRACTOR DIRECT AGREEMENT

AGREEMENT

BETWEEN

(1) [*SUB-CONTRACTOR*] [(company number [◆]) whose registered office is at [◆]] *OR* [carrying on business together in partnership under the name of [◆] at [◆]] ("**Sub-Contractor**")];

(2) [[**tie LIMITED** (Company Number SC230949) whose registered office is at City Chambers, High Street, Edinburgh, Midlothian, EH1 1YJ] OR [[**Other third party beneficiary**] [(company number [◆]) whose registered office is at [◆]] ***OR*** [carrying on business together in partnership under the name of [◆] at [◆]]] [("**Beneficiary**") which expression shall include its successors and permitted assignees.; and

(3) **CONSTRUCCIONES Y AUXILIAR DE FERROCARRILES S.A. (CAF)** a company registered in Spain in the Corporate Register of Guipuzcoa: volume 983, sheet 144, page number SS-329, entry 239 and having its registered office at J.M. Iturrioz 26, 20200 Beasain (Guipuzcoa) – Spain ("**Tram Supplier**").

BACKGROUND

A By an agreement in writing dated ◆ 200 ◆ (the "**Tram Supply Agreement**"), **tie** appointed the Tram Supplier to design, manufacture and supply Trams and supply documentation and associated equipment in connection with the Edinburgh Tram Network.

B It is a term of the Tram Supply Agreement that the Tram Supplier shall procure that the Sub-Contractor enter into this Agreement with the Beneficiary.

C The Sub-Contractor has been appointed by the Tram Supplier as [◆] in terms of the Sub-Contract (as hereinafter defined).

D It is a term of the Sub-Contract or has otherwise been agreed that the Sub-Contractor enters into this Agreement with the Beneficiary in relation to the Sub-Contract Works.

IT IS AGREED as follows:

1. **DEFINITIONS AND INTERPRETATION**

In this Agreement:

1.1 the following words and expressions have the following meanings, unless the context requires otherwise:

TIE00899939_1250

"**Agreement**" means this document (as amended from time to time pursuant to clause 13);

"**Edinburgh Tram Network**" means the tramway which is to be designed, constructed and maintained in Edinburgh in Phase 1a (forming part of Line One and Line Two as described in the Tram Legislation) and Phase 1b, or either of them (as may be amended from time to time together with any modification, line extension, spur, interconnection and any additional line which may be instructed), to be constructed in accordance with the Tram Legislation together with all associated works and facilities including all civil engineering and track works, Trams, infrastructure, plant, machinery and equipment installed or used for such tramway;

"**Good Industry Practice**" means using standards, practices, methods and procedures conforming to Law and exercising that degree of skill, care, diligence, prudence and foresight that would reasonably be expected from a large, reputable, professionally qualified, competent and skilled organisation experienced in carrying out activities of a similar nature, scope and complexity to those comprised in the Sub-Contract Works, and seeking in good faith to comply with its contractual obligations and all duties owed by it;

"**Insurance Period**" means the period of 12 years from the date of issue of the last certificate of substantial completion in respect of the Sub-Contract Works, as established pursuant to and for the purposes of the Sub-Contract (or, if sooner, 12 years after termination of the employment of the Sub-Contractor under the Sub-Contract);

"**Intellectual Property Rights**" means any rights in or to any patent, design right, utility model, trade mark, brand name, service mark, trade name, business name, logo, invention (whether registered or unregistered), domain name, semi-conductor right, topography right, software designs and/or other materials, source code, copyright, moral right, know-how, or rights in databases and any other rights in respect of any industrial or intellectual property, whether capable of being registered or not, including all rights to apply for any of the foregoing rights or for an extension, revival or renewal of any of the foregoing rights and any similar or analogous rights to any of the above, whether arising or granted under the law of Scotland or of any other jurisdiction;

"**Law**" means:

(a) any Act or instruments of the Scottish Parliament or the United Kingdom Parliament or subordinate legislation within the meaning of section 21(1) of the Interpretation Act 1978, any exercise of the Royal Prerogative, and any enforceable community right within the meaning of section 2 of the European Communities Act 1972;

(b) any applicable guidance, direction or determination issued by any regulatory body with which **tie**, CEC, the Tram Supplier and/or the Sub-Contractor is bound to comply; and

(c) any applicable judgment of a relevant court of law which is a binding precedent,

in each case in force, or applicable in Scotland;

"**Line One**" means the tramway works as authorised by the Edinburgh Tram (Line One) Act 2006;

"**Line Two**" means the tramway works as authorised by the Edinburgh Tram (Line Two) Act 2006;

"**Party**" means each and any of the parties to this Agreement and Parties shall be construed accordingly;

"**Sub-Contract**" means the sub-contract dated [□] made between the Tram Supplier and the Sub-Contractor;

"**Sub-Contract Works**" means the works and services to be undertaken by the Sub-Contractor under the Sub-Contract;

"**Sub-Contractor Deliverables**" means all documents, information, reports, diagrams, records, method statements, risk assessments, manuals, schedules, databases, photographs, formulae, plans, designs, specifications, drawings, details, calculations, models and simulations, the outputs and reports based on any models, programmes and all other material created and/or provided by the Sub-Contractor (or any other third party) in the performance of the Sub-Contract Works and the Sub-Contractor's obligations under the Sub-Contract;

"**TEL**" means Transport Edinburgh Limited a company incorporated under the Companies Act with registered number SC269639 and having its registered office at

55 Annandale Street, Edinburgh, Midlothian, EH7 4AZ which shall include its successors in title and permitted assignees;

"**Trams**" means the tram vehicles to be provided for operation on the Edinburgh Tram Network;

"**Tram Legislation**" means the Edinburgh Tram (Line One) Bill and the Edinburgh Tram (Line Two) Bill, and after such Bills are enacted means the Edinburgh Tram (Line One) Act, the Edinburgh Tram (Line Two) Act and such other legislation relative to the Edinburgh Tram Network as may be enacted from time to time; and

1.2 unless the context requires otherwise:

1.2.1 words importing:

1.2.1.1 the singular include the plural and vice versa; and

1.2.1.2 one gender include all other genders.

1.2.2 a reference to:

1.2.2.1 persons includes firms, companies, corporations, partnerships, trusts, authorities and other incorporated and/or unincorporated bodies; and

1.2.2.2 a clause is a reference to a clause in this Agreement.

1.3 The list of contents and clause headings in this Agreement are included for convenience only and do not affect its interpretation.

1.4 Where a party comprises two or more persons:

1.4.1 any obligations on the part of that party contained or implied in this agreement are deemed to be joint and several obligations on the part of those persons; and

1.4.2 references to that party shall include references to each and any of those persons.

2. STANDARD OF CARE

2.1 The Sub-Contractor warrants and undertakes to the Beneficiary that it has carried out and shall carry out the Sub-Contract Works and its other duties and obligations under the Sub-Contract subject to and in accordance with the terms thereof.

2.2 In addition to and without derogation from clause 2.1, the Sub-Contactor warrants to the Beneficiary that:

2.2.1 in the performance of the Sub-Contract Works and its other obligations under the Sub-Contract it shall exercise a reasonable level of professional skill, care and diligence to be expected of a properly qualified and competent contractor experienced in carrying out works and services similar to the Sub-Contract Works in connection with projects of a similar type, nature and complexity;

2.2.2 any design produced by the Sub-Contractor will satisfy in every respect any relevant performance specification or any requirement included or referred to in the Sub-Contract and will be suitable in every respect for the purposes included in or reasonably to be inferred from the Sub-Contract; and

2.2.3 any design produced by the Sub-Contractor will fully comply with Law.

2.3 The Sub-Contractor shall owe a duty of care to the Beneficiary in carrying out its duties and obligations under the Sub-Contract.

3. MATERIALS

3.1 The Sub-Contractor warrants to the Beneficiary that it has not and shall not use any materials which at the time of use:

3.1.1 are known to be deleterious in the particular circumstances in which they are used (either to health and safety or to the durability of any works on which the Sub-Contractor is employed by the Tram Supplier); or

3.1.2 contravene any relevant standard or code of practice issued from time to time by the BSI Group or under a European directive relating to standards; or

3.1.3 do not accord with the guidelines contained in the edition of the publication "Good Practice in Selection of Construction Materials" (Ove Arup & Partners) current at the date of specification of use; or

3.1.4 contravene Good Industry Practice.

4. COPYRIGHT LICENCE

4.1 The Sub-Contractor hereby grants to the Beneficiary an royalty-free and exclusive licence to use such Intellectual Property Rights in the Sub-Contractor Deliverables as may be necessary for the Beneficiary to use in relation to the operation and maintenance of the trams but, not in any case, for manufacturing purposes, [[Edinburgh Tram Network] ***OR*** [*Where beneficiary is not* ***tie*** *an appropriate use should be included*]]. This licence shall carry the right to grant sub-licences, and be transferable to third parties, prior written approval of the Tram Supplier.

4.2 In so far as ownership of the copyright and any other Intellectual Property Rights in any Sub-Contractor Deliverable prepared or provided by the Sub-Contractor in connection with the Edinburgh Tram Network is vested in any person other than the Sub-Contractor, the Sub-Contractor shall procure for the Beneficiary the benefit of such a licence as is referred to in clause 4.1 for the purposes referred to therein.

4.3 The Sub-Contractor shall, if so requested at any time, execute such documents and perform such acts as may be required fully and effectively to assure to the Beneficiary or any third party the rights referred to in this clause 4.

4.4 The Sub-Contractor shall provide to the Beneficiary a copy of any of the Sub-Contractor Deliverables as soon as reasonably practicable after receipt by the Sub-Contractor of a written request from the Beneficiary to do so, unless already delivered to **tie**.

4.5 The Sub-Contractor undertakes to the Beneficiary that the use by the Beneficiary of any of the Sub-Contractor Deliverables for any purpose provided for in this clause 4 shall not infringe the rights of any third party in relation to the Sub-Contractor Deliverables.

5. REQUIRED INSURANCES

5.1 The Sub-Contractor undertakes that:

5.1.1 it has maintained and shall maintain during the performance of its obligations under the Sub-Contract and the Insurance Period each of the insurances as follows:

5.1.1.1 professional indemnity insurance with an insurer authorised to carry out insurance business in the United Kingdom for an amount not less than £[□] on an each and every claim basis and £[□] on an aggregate basis in respect of pollution and contamination claims and date recognition claims, in respect of the legal liability of the Sub-Contractor as a result of any negligent act, error or omission in the performance of the professional activities and duties in connection with the Sub-Contract Works and in the performance of its obligations under the Sub-Contract; and

5.1.1.2 [◆] [*Detail any further insurances held by the Sub-Contractor*]

5.1.2 cover under the professional indemnity insurance is extended to include the Sub-Contractor's liabilities under this Agreement;

5.1.3 this Agreement has been disclosed to the Sub-Contractor's current professional indemnity insurers or brokers (as the case may be) and shall be disclosed to any future professional indemnity insurers or brokers providing the insurance required by this Agreement; and

5.1.4 the Sub-Contractor shall abide by the terms and conditions of insurance and shall not do or omit to do anything that might prejudice the cover or its right to make a claim.

5.2 As and when reasonably required by the Beneficiary, the Sub-Contractor shall produce for inspection documentary evidence that such insurance is being properly maintained.

5.3 If the insurer makes or attempts to make any material alteration or purports to withdraw the Sub-Contractor's professional indemnity cover, or if the Sub-Contractor is unable to obtain professional indemnity insurance, the Sub-Contractor shall promptly give notice of this to the Beneficiary.

6. STEP-IN

6.1 The Sub-Contractor shall not exercise nor seek to exercise any right of determination of its employment under the Sub-Contract or to rescind the Sub-Contract or to discontinue the performance of any of the Sub-Contractor's obligations in relation to the Sub-Contract by reason of breach on the part of the Tram Supplier (or otherwise) without giving to the Beneficiary not less than twenty one days' written notice of its

TIE00899939_1256

intention to do so and specifying in such notice the grounds for the proposed determination. The Sub-Contractor will for the period of any such notice diligently and properly continue to perform the Sub-Contractor's obligations under the Sub-Contract.

6.2 Any period stipulated in the Sub-Contract for the exercise by the Sub-Contractor of a right of determination will nevertheless be extended as may be necessary to take account of the period of notice required under clause 6.4.

6.3 Compliance by the Sub-Contractor with the provisions of clause 6.1 will not be treated as a waiver of any breach on the part of the Tram Supplier giving rise to the right of determination nor otherwise prevent the Sub-Contractor from exercising its rights after the expiration of the notice unless the right of determination has ceased under the provisions of clause 6.4.

6.4 The right of the Sub-Contractor to determine its employment under the Sub-Contract or to rescind the Sub-Contract or to discontinue the performance of any of its obligations in relation to the Sub-Contract shall cease if within the period of twenty one days referred to in clause 6.1 the Beneficiary gives written notice to the Sub-Contractor:

6.4.1 requiring the Sub-Contractor to continue with the performance of all its obligations under the Sub-Contract;

6.4.2 acknowledging that the Beneficiary is assuming all the obligations of the Tram Supplier under the Sub-Contract; and

6.4.3 undertaking to the Sub-Contractor to discharge all amounts payable to the Sub-Contractor under the terms of the Sub-Contract.

6.5 Upon compliance by the Beneficiary with the requirements of clause 6.4 the Sub-Contract will continue in full force and effect as if the right of determination on the part of the Sub-Contractor had not arisen and in all respects as if the Sub-Contract had been made between the Beneficiary and the Sub-Contractor to the exclusion of the Tram Supplier.

6.6 Notwithstanding that as between the Tram Supplier and the Sub-Contractor the Sub-Contractor's right of determination of its engagement under the Sub-Contract may not have arisen the provisions of clause 6.5 shall nevertheless apply if the Beneficiary

gives written notice to the Sub-Contractor and the Tram Supplier to that effect and the Beneficiary complies with the requirements on its part under clause 6.4.

6.7 The Sub-Contractor does not need to be concerned or required to enquire whether, and will be bound to assume that, as between the Tram Supplier and the Beneficiary, the circumstances have occurred permitting the Beneficiary to give notice under clause 6.6.

6.8 By acting in accordance with the provisions of this clause 6 , the Sub-Contractor will not incur any liability to the Tram Supplier.

6.9 Unless and until the Beneficiary has given notice under this clause 6:

6.9.1 the Beneficiary has no liability whatsoever to the Sub-Contractor in respect of amounts payable to the Sub-Contractor under the Sub-Contract; and

6.9.2 the Beneficiary has no authority to issue any direction or instruction to the Sub-Contractor in relation to the performance of the Sub-Contractor's duties under the Sub-Contract.

6.10 Without prejudice to the provisions of clauses 6.1 to 6.9 inclusive, if prior to the service of any notice under clause 6.4 the employment of the Sub-Contractor under the Sub-Contract is determined for any reason whatsoever the Sub-Contractor shall, if requested in writing so to do by the Beneficiary no later than 12 weeks after the date of such determination, forthwith enter into a new agreement with the Beneficiary in relation to the carrying out of the Sub-Contract Works on the same terms as the Sub-Contract, but with such revisions as the Beneficiary and the Sub-Contractor may reasonably require to reflect altered circumstances and the fact that it is the Beneficiary and not the Tram Supplier employing the Sub-Contractor.

7. ASSIGNATION

7.1 The Sub-Contractor shall not assign, novate or otherwise transfer the whole or any part of the Agreement without the prior written agreement of the Beneficiary.

7.2 The Beneficiary shall be entitled to assign, novate or otherwise transfer the whole or any part of this Agreement:

[[*Include where the Beneficiary is* ***tie***]

TIE00899939_1258

[7.2.1 to the Scottish Ministers, TEL, the City of Edinburgh Council or any local authority; or

7.2.2 other body with no worse financial standing than that of the Beneficiary who takes over all or substantially all the functions of the Beneficiary; or

7.2.3 to any other person whose obligations under this Agreement are unconditionally and irrevocably guaranteed (in a form acceptable to the Sub-Contractor acting reasonably) by the Beneficiary or a person falling within clause 7.2.1; or

7.2.4 with the prior written consent of the Tram Supplier (such consent not to be unreasonably withheld or delayed) to any person not covered by clauses 7.2.1 or 7.2.2.]

7.2.5 without the consent of the Sub-Contractor to any person provided that no more than two such assignations will be permitted. Any assignations by the Beneficiary to a subsidiary or associated company of the Beneficiary or a member of the same group of companies will not count as an assignation;

7.2.2 with the prior written consent of the Sub-Contractor (such consent not to be unreasonably withheld or delayed).]]

7.3 The Sub-Contractor undertakes to the Beneficiary not to contend in any court proceedings under this Agreement that any person to whom the Beneficiary assigns or has assigned its rights under this Agreement or any of them in accordance with the foregoing provisions of this clause is to be precluded from recovering any loss resulting from any breach of this Agreement (whenever happening) by reason that such person is an assignee and not the original contracting party under this Agreement or by reason that the Beneficiary is named under this Agreement or any intermediate assignee of the Beneficiary escaped loss resulting from such breach by reason of the disposal of its interest in the same.

8. LIABILITY OF THE SUB-CONTRACTOR

8.1 No provision of this Agreement is intended to exclude any obligation or liability which would otherwise be implied whether by the law of contract, delict or otherwise.

8.2 The responsibility of the Sub-Contractor under this Agreement is not to be reduced or in any way released or limited by any enquiry or inspection by or on behalf of any

TIE00899939_1259

person notwithstanding that such enquiry or inspection may give rise to a claim by the Beneficiary against a third party.

8.3 The rights and benefits conferred upon the Beneficiary by this Agreement are in addition to any other rights and remedies that the Beneficiary may have against the Sub-Contractor including (without prejudice to the generality of the foregoing) any remedies in delict.

8.4 Subject to the other provisions of this Agreement, the liability of the Sub-Contractor to the Beneficiary is to be determined in all respects in accordance with the terms of the Sub-Contract and, in the event of any claim by the Beneficiary under this Agreement, the Sub-Contractor shall be entitled to rely upon any defence, right, limitation or exclusion under the Sub-Contract as though the Beneficiary were named as the Tram Supplier under it, except that:

8.4.1 the Beneficiary shall not be affected by any subsequent variation of the Sub-Contract which would adversely affect the obligations owed by the Sub-Contractor or the waiver, compromise or withdrawal of any claim made by the Tram Supplier; and

8.4.2 the Sub-Contractor shall not be entitled to exercise any right of set-off, retention or withholding against the beneficiary to which the Sub-Contractor may be entitled against the Tram Supplier.

8.5 In no event the Sub-Contractor r shall be responsible for indirect or consequential damages.

9. CONSENT OF TRAM SUPPLIER

9.1 The Tram Supplier consents to the terms of this Agreement.

10. NOTICES

10.1 Any notice required to be given under this Agreement is to be hand delivered or sent by prepaid registered or recorded delivery post to the party concerned at its address set out in this Agreement or to such other addresses as may be notified by such party for the purposes of this clause.

10.2 Any notice given pursuant to this clause, if sent by special or recorded delivery, is deemed to have been received on proof of delivery.

TIE00899939_1260

11. RIGHTS OF THIRD PARTIES

11.1 A person who is not a party to this Agreement shall have no right to enforce any term of this Agreement.

12. INVALID TERMS

12.1 If any term of this Agreement shall be held to any extent to be invalid, unlawful or unenforceable:

12.1.1 that term shall to that extent be deemed not to form part of this Agreement; and

12.1.2 the validity and enforceability of the remainder of this Agreement shall not be affected.

13. VARIATIONS AND WAIVERS TO BE IN WRITING

13.1 No variation, alteration or waiver of any of the provisions of this Agreement shall be effective unless it is in writing and signed by or on behalf of the Party against which the enforcement of such variation, alteration or waiver is sought.

14. WAIVER

14.1 Save where expressly stated, no failure or delay by either Party to exercise any right or remedy in connection with this Agreement shall operate as a waiver of it or of any other right or remedy nor shall any single or partial exercise preclude any further exercise of the same, or of some other right or remedy. A waiver of any breach of this Agreement shall not be deemed to be a waiver of any subsequent breach.

14.2 The Parties' rights and remedies under this Agreement are, except where provided otherwise in this Agreement, independent, cumulative and do not operate to exclude one another or any rights or remedies provided by law.

15. JURISDICTION AND LAW

15.1 This Agreement is governed by and is to be construed according to Scots law and the Scottish courts shall have jurisdiction in relation to all matters arising under it.

[[*Include where the Beneficiary is* ***tie***]

TIE00899939_1261

15.2 The Parties agree that any dispute in relation to this Agreement shall be conducted in accordance with Clause 64 (*Dispute Resolution*) of the Tram Supply Agreement and the provisions of the said Clause 64 (*Dispute Resolution*) and Schedule 13 (*Dispute Resolution Procedure*) and Schedule 14 (*Panels for Dispute Resolution Procedure*) of the Tram Supply Agreement are deemed to be incorporated mutatis mutandis in respect of this Agreement provided that any reference to "Parties" in the Tram Supply Agreement shall be deemed to refer to the Beneficiary and the Sub-Contractor and the reference in the Tram Supply Agreement to "Clause 68 (*Notices*)" shall mean clause 10 of this Agreement.

IN WITNESS WHEREOF these presents on this and the preceding [◆] pages are executed as follows:

EXECUTED for and on behalf of **[SUB-CONTRACTOR]** at

on 200[◆] by:

Director/Authorised Signatory _____

Full Name _____

Witness Signature _____

Full Name _____

Address _____

_____

EXECUTED for and on behalf of **[[tie LIMITED]** ***OR*** **[*other third party beneficiary*]** at

on 200[◆] by:

Authorised Signatory _____

Full Name _____

Witness Signature _____

Full Name _____

Address _____

_____

TIE00899939_1262

EXECUTED for and on behalf of
CONSTRUCCIONES Y AUXILIAR DE FERROCARRILES S.A. (CAF)

at

on 200[◆] by:

Director/Authorised Signatory _____

Full Name _____

Witness Signature _____

Full Name _____

Address _____

_____

[redacted]

Director/Authorised Signatory
tie LIMITED

[redacted]

Director/Authorised Signatory
CONSTRUCCIONES Y AUXILIAR DE FERROCARRILES S.A. (CAF)

TIE00899939_1263

TIE00899939_1264

This is Schedule 19 referred to in the foregoing Tram Supply Agreement between tie Limited and Construcciones Y Auxiliar de Ferrocarriles S.A. (CAF)

SCHEDULE 19

ADDITIONAL TRAMS

COMBINED PRICE SCHEDULE & PAYMENT MILESTONES - ADDITIONAL TRAMS (28 to 31 TRAMS)					
No.	Milestone Description	Forecast Date	Price in €	% of Total Milestone Payments	Cumulative
1	Contract Award	Apr 2009 (NTP)	2 159 565 €	20,00%	20,00%
2	Delivery of 28th Tram	Oct 2010 (NTP+18)	2 024 686 €	18,75%	38,75%
3	Commissioning of 28th Tram	Nov 2010 (NTP +19)	134 979 €	1,25%	40,00%
4	Delivery of 29th Tram	Oct 2010 (NTP+18)	2 024 686 €	18,75%	58,75%
5	Commissioning of 29th Tram	Nov 2010 (NTP +19)	134 979 €	1,25%	60,00%
6	Delivery of 30th Tram	Nov 2010 (NTP +19)	2 024 686 €	18,75%	78,75%
7	Commissioning of 30th Tram	Dec 2010 (NTP+20)	134 979 €	1,25%	80,00%
8	Delivery of 31st Tram	Nov 2010 (NTP +19)	2 024 686 €	18,75%	98,75%
9	Commissioning of 31th Tram	Dec 2010 (NTP+20)	134 979 €	1,25%	100,00%
10	Delivery of Spares	--	0 €	0,00%	100,00%
11	Delivery of all final Documentation	--	0 €	0,00%	100,00%
12	Delivery of Special Tools	--	0 €	0,00%	100,00%
13	Completion of Driver Training	--	0 €	0,00%	100,00%
14	Completion of Maintainer Training	--	0 €	0,00%	100,00%
15	Completion of Integrated System Testing	--	0 €	0,00%	100,00%
16	Commencement of Shadow Running	--	0 €	0,00%	100,00%
17	Opening for Passenger Carrying Service	--	0 €	0,00%	100,00%
TOTALS			10.798.325 €	100,00%	

NOTE 1
The answer in "Further additional Trams" (32 to 35) regarding (a) price and (b) indexation is also applicable to "Additional Trams" (28 to 31)

NOTE 2
The Forecasted Dates are applicable if the purchase order is made before may 2009

NOTE 3.
The Mobilisation Cost mentioned on "Further additional Trams" NOTE 2 is applicable to Additional Trams if purchased after NTP+17

TIE00899939_1265

	PRICE SCHEDULE - FURTHER ADDITIONAL TRAMS (32 to 35 TRAMS)	€
a	Price for further additional 4 Trams that may be ordered by tie / TEL at some in the future for greater service capacity, beyond the main production run.	2.699.581 €

b	Basis of proposed indexation of price (please insert details below): The system for indexation of price will be based on the Spanish Consumer Price Index (IPC Indice de Precios al Consumo) published by the Instituto Nacional de Estadistica (Office for National Statistics) of Spain.

c	Date for which the above mechanism will remain valid (31 March 2015 is minimum).	31 March 2015

NOTE 1:
The conditions described for 32 to 35 trams is also applicable to the set 28 to 31 trams if the purchase order is 17 month after the NTP.

NOTE 2:
There is a mobilisation fixed cost of 2.886.000 euros. This cost applies to any option that goes beyond the main production run; thus, it is applicable for 32 to 35 optional Trams and for 28 to 31 trams if production must be stopped

[redacted]

Director/Authorised Signatory
tie LIMITED

[redacted]

Director/Authorised Signatory
CONSTRUCCIONES Y AUXILIAR DE FERROCARRILES S.A. (CAF)

TIE00899939_1266

This is Schedule 20 referred to in the foregoing Tram Supply Agreement between tie Limited and Construcciones Y Auxiliar de Ferrocarriles S.A. (CAF)

SCHEDULE 20

TIE AND CEC POLICIES

Trams for Edinburgh

Tram Project Environmental & Sustainability Policy Statement

The Edinburgh Tram project will deliver a new tram network for the City of Edinburgh.

tie recognises that the achievement of excellence in the delivery of such projects is underpinned by a systematic approach where concern for environmental and sustainability matters is fundamental and forms an integral part of its operations.

tie will adopt an environmental management system which conforms to the principles and requirements of BS EN ISO 14001 2004 Environmental Management Systems.

The management team:

- Is committed to good environmental management practice, including building sustainability into the project and the prevention of pollution,
- Shall promote a positive culture on environmental and sustainability issues through leadership and communication,
- Use effective communication within the team as a primary enabler of environmental good practice,
- Shall put in place suitable management arrangements for ensuring environmental matters are integral to the execution of the Tram project,
- Is committed to continual improvement of its environmental management arrangements,
- Will set environmental and sustainability objectives which shall be monitored and reviewed for effectiveness and suitability,
- Shall work with the relevant statutory bodies to comply with or exceed applicable legislation, regulations and contractual obligations.

It is recognised that everyone involved with tie has responsibilities for reducing our impact on the environment; good environmental practice must be considered a core value that is to be taken into account by all tie personnel and tie suppliers in all those activities they undertake for tie.

This policy will be communicated to tie personnel and tie suppliers so ensuring that they are aware of their own responsibilities within it. Additionally it will be made available to other interested third parties who may require it.

This policy shall be reviewed annually for continuing suitability.

Signed

Matthew Crosse
Project Director
27th February 2007

DOC NO	VERSION	STATUS	DATE	PROJECT	SHEET
DEL.HSQE.101	2.0	Approved	27 Feb. 07	Edinburgh Tram Network	1 of 1

Trams for Edinburgh

Tram Project Safety Policy Statement

The Edinburgh Tram project will deliver a new tram network for the City of Edinburgh.

The project will adopt a safety management system which conforms to the principles and requirements of OHSAS **18001** : 1999 Occupational health and safety management systems - Specification or **HSG65: 2000** Successful Health & Safety Management.

tie recognises that the control of health and safety aspects arising from the Edinburgh Tram project is an essential feature of our efficient operation.

tie also recognises and accepts the responsibility of the Health and Safety at Work etc Act 1974 and associated legislation to provide and maintain safe working conditions and a healthy environment for all persons who may be affected by the Edinburgh Tram project. The management team:

- shall provide plant and systems of work that are safe and free from risks to health,
- shall provide such information, instruction, training and supervision as is necessary to ensure the health and safety at work of all employees and those who may be affected by our work,
- shall maintain in a condition that is safe and free from risk to health, any place of work under **tie**'s control and provide adequate facilities and arrangements for the welfare of employees at work,
- shall safeguard visitors to all areas within **tie**'s control and any member of the public who may be affected by **tie**'s activities,
- shall ensure that all information concerning health and safety pertaining to the Edinburgh Tram project is provided, where appropriate, to external sources,
- shall encourage and promote a safety culture which will show best practises on the Edinburgh Tram project by showing leadership and commitment to health and safety issues,
- set health and safety objectives which shall be monitored and reviewed for effectiveness and suitability.

It is recognised that everyone involved with the Edinburgh Tram project is responsible for health and safety. Health and safety must be considered as a core value that is to taken into account by Edinburgh Tram project staff and suppliers in all their project related activities.

This policy shall be communicated to Edinburgh Tram project staff and suppliers.

This policy shall be reviewed annually for continuing suitability.

Signed

[redacted]

Matthew Crosse
Project Director
26th July 2007

DOC NO	VERSION	STATUS	DATE	PROJECT	SHEET
DEL.HSQE 105	3.0	Approved	26 Jul 07	Edinburgh Tram Network	1 of 1

	Cover Approval Sheet	Doc Ref:	PS 625
		Rev:	0.0
	Company Policy	Status:	Approved
		Owner:	HR Department

DRUGS & ALCOHOL POLICY

Document Approval

	Signature	Title	Date
Prepared By:	[redacted]	tie HSQE Manager	02/08/07
Approved By:		Engineering & Procurement Director	02/08/07
Authorised By:		HR & Corporate Affairs Director	02/08/07

Confidential and Proprietary Information of tie Limited.

	DRUGS & ALCOHOL POLICY	Doc Ref.	PS 625
		Rev	0.0
	Company Policy	Status	Approved
		Owner	HR Department

tie has a responsibility to provide a safe and healthy working environment and recognises that this may be jeopardised by those who misuse alcohol and/or drugs within the working environment, or in a way that may affect themselves or others

The tie policy reflects the requirements of the Transport and Works Act 1992

tie will take all reasonable steps to ensure that employees, consultants and contractors are made aware of the content of this statement, legislation, standards and client requirements and the implications therein.

Specific arrangements are detailed in the tie Drugs and Alcohol procedure.

It is a requirement of tie that no employee, consultant or contractor shall:

- Report or endeavour to report for duty in an unfit state due to alcohol or illegal drugs abuse;
- Be in possession of alcohol or illegal drugs in the workplace
- Consume alcohol or illegal drugs whilst on duty

When medication is prescribed or advised to an employee, they must advise the medical practitioner or pharmacist of the nature of their work so that appropriate information on the possible affects and the potential effect on workplace safety can be given. The employee must inform their manager and provide relevant and accurate details of the medication involved in order that they may obtain advice on what, if any, restrictions apply. The employee must comply with any restrictions imposed by their manager.

tie policy permits assistance with the rehabilitation of employees that voluntarily seek help for alcohol or drug dependency or misuse problems. Staff must, however, seek assistance at the earliest opportunity. Subsequent discovery or disclosure prompted by an impending screening will not be acceptable.

A programme of screening is in place within tie to:

- Detect the use of drugs and/or alcohol by potential employees via employment medical screening;
- Detect the use of drugs and/or alcohol by any person(s) via "random testing";
- Detect the use of drugs and/or alcohol by any person(s) involved in a safety critical incident via 'for cause' testing where there are grounds to suspect that the actions of the person(s) led to the incident, and
- Detect the use of drugs and/or alcohol via "for cause" testing where abnormalities of behaviour prompt managerial intervention.

tie require full compliance with this policy and shall take the appropriate disciplinary action in the event of any infringement.

[redacted]

Willie Gallagher
Executive Chairman
02 August 2007

1.0 DOCUMENT CHANGE CONTROL HISTORY

Revision	Date	CR No	Reason for Change	Authorisation
A	16/11/2006		1st Issue of new document	
0.0	02/08/2007	0015	Re-draft in company template	02/08/2007

Trams for Edinburgh

Tram Project Quality Policy Statement

The Edinburgh Tram project will deliver a new tram network for the City of Edinburgh.

The project will adopt a quality management system which conforms to the principles and requirements of BS EN ISO 9001 2000 Quality Management Systems.

tie recognises that the achievement of the objectives set for the Edinburgh Tram project requires that the project is underpinned by a systematic approach with a "right first time" attitude. The management team

- shall promote a positive culture through leadership and communication,
- use effective communication within the team as a primary enabler of quality,
- shall put in place suitable management arrangements for the effective execution of the Edinburgh Tram project,
- is committed to continual improvement of its management arrangements throughout the project life cycle,
- set quality objectives which shall be monitored and reviewed for effectiveness and suitability,
- will deliver a tram network that is fit for purpose, meeting the technical requirements of the project's stakeholders and being delivered to time and cost.

It is recognised that everyone involved with the Edinburgh Tram project is responsible for the quality of the delivery. Quality must be considered as a core value that is to taken into account by Edinburgh Tram project staff and suppliers in all their project related activities.

This policy shall be communicated to Edinburgh Tram project staff and suppliers.

This policy shall be reviewed annually for continuing suitability.

Signed

[redacted]

Matthew Crosse
Project Director
27th February 2007

DOC NO	VERSION	STATUS	DATE	PROJECT	PAGE
DEL HSQE 103	2.0	Approved	27 Feb 07	Edinburgh Tram Network	1 of 1

TIE00899939_1272

EDINBURGH TRAM LINES ONE AND TWO

NOISE AND VIBRATION POLICY

DECEMBER 2005

1 *INTRODUCTION*

This policy statement sets out the approach the promoter proposes to adopt to mitigate noise from the operation of Edinburgh Tram Lines One and Two. Impacts during construction will be covered by the Edinburgh Tram Lines One and Two Code of Construction Practise.

This policy has been developed in the absence of any statutory requirements for noise mitigation from rail systems in Scotland. Unlike the situation for new roads throughout the UK, and for new railways in England and Wales, there are no noise insulation regulations or other statutory requirements to control noise from railways in Scotland. The promoter therefore proposes to implement a noise scheme based upon non-statutory standards set out in this policy statement. These are set at significantly lower noise levels than apply for statutory noise insulation elsewhere and mitigation will be provided wherever it is reasonably practicable to do so. It is important to recognise that this is a non-statutory arrangement and there will be cases where there are practical limitations as to what can be achieved. This Policy clarifies how these circumstances will be addressed.

2 *APPROACH*

The promoter will undertake measures to mitigate significant noise impacts for residents and other noise sensitive receivers in the vicinity of the routes, following a tiered approach. In this, different options for mitigation will be considered in turn, taking into account what is reasonably practicable and acceptable to affected parties in the circumstances of each location potentially affected by noise. This policy will be applied in accordance with the principle of best practicable means (1).

(1) Best Practicable Means are defined in section 72 of the Control of Pollution Act 1974 as those measures which are "reasonably practicable having regard among other things to local conditions and circumstances, to the current state of technical knowledge and to financial implications".

- Firstly, the promoter will define and apply strict noise emission standards when procuring all tram vehicles.

- Secondly, the promoter will use all reasonably practicable measures to avoid significant noise impacts through design of the track and trackbed.

- Thirdly, where these measures are not sufficient to mitigate significant impacts, the promoter will provide noise barriers to attenuate noise between the track and sensitive receivers.

- Fourthly, the promoter will offer noise insulation within residential properties where, after all reasonably practicable and acceptable attenuation at source is provided, residual noise levels would exceed given thresholds

Noise sensitive receivers are defined to include all types of dwellings, schools, libraries, hospitals, theatres and concert halls, and places of worship currently bordering the route.

In defining what is reasonably practicable (or what constitutes best practicable means), the promoter will take into account engineering feasibility, maintenance of driver sight lines, safe operation of the tram, safe interaction with road traffic, the safety of pedestrians and cyclists, and security and crime considerations. It will also take into account the cost of any proposed mitigation measure and the level of benefit achieved in terms of number of properties affected, the degree of noise reduction and the resulting noise levels, such that costs are not disproportionate to the benefits achieved. In defining what is acceptable the promoter will consult affected residents and take into account impacts on their amenity and that of other parties such a recreational user of facilities, and any other environmental concerns.

The application of these principles is further described below. A key aspect of their application is the definition of what constitutes a significant impact and this is set out in the next section before describing how this applies to the selection of appropriate noise mitigation measures at the four levels in the mitigation hierarchy.

3 *DEFINITION OF SIGNIFICANT NOISE IMPACT*

As noted above there are no statutory requirements for mitigating tram noise in Scotland. It is therefore necessary to define criteria to establish when noise mitigation should be considered. These have been based on the approach used in the Environmental Impact Assessments for Edinburgh Tram Lines

TIE00899939_1274

One and Two. The likelihood of exceeding these criteria will be determined in advance of construction by noise modelling [1].

Options for noise mitigation will start to be considered if the free-field noise level outside the window of any sensitive receiver exceeds either of the following noise target levels:

- for daytime noise, $L_{Aeq\ 0700\text{-}2300\ hours}$ 55 dB;

or

- for night time noise, $L_{Aeq\ 2300\text{-}0700\ hours}$ 45 dB

Where tram noise is predicted to be more than 3dB [2] above either of these thresholds, mitigation measures to reduce the adverse impact of noise will be considered according to the extent to which the pre-existing ambient ($L_{Aeq,\ 1\ hour}$) noise level is increased, as follows:

- Increase of 3-5 dB - mitigation considered on a case by case basis, and implemented if reasonably practicable and acceptable to affected parties.

- Increase of greater than 5 dB – mitigation implemented if reasonably practicable and acceptable to affected parties.

4 THE MITIGATION HIERARCHY

4.1 TRAM VEHICLE PROCUREMENT

The promoter will define and apply strict noise emission standards in the procurement of all tram vehicles. These will be decided following a review of achievable performance standards at the time of procurement of the tram vehicles and will be designed to reflect prevailing good standards at the time. The tram vehicle and the tram rails will be designed in a coordinated manner, so as to achieve the required performance standard in the circumstances to be encountered on the Edinburgh Tram system.

4.2 TRACK DESIGN

The promoter will adopt all reasonably practicable and acceptable measures to reduce noise at source by design of the track to attenuate noise. A variety of

(1) Predictions will be made at the final design stages by modelling and will take into account details of the track alignment and surrounding ground form between the track and the nearest building facade, the presence of natural barriers, the selected tram vehicle and the operating schedule.
(2) Exceedances of up to 3 dB are considered to be of marginal significance. In line with current guidance, 3 dB is taken as the limit of perception of change in environmental noise.

TIE00899939_1275

measures may be available to contribute to noise reduction at source and the promoter will consider all current developments in the field in developing the final design for the scheme. These will include the use of grass track which is already planned along some sections of the route and installation of acoustic plenum structures alongside the tram rails if this is acceptable to HM Railways Inspectorate.

4.3 *Noise Barriers*

Where significant noise impacts are still predicted to occur, the promoter will consider the provision of noise screening structures within the tram corridor. The dimensions (length and height) and form of each structure will be determined by modelling and in consultation with affected properties. Where an attenuating structure proves not to be reasonably practicable or acceptable, or is only possible with reduced dimensions, the promoter will consider whether there are additional special measures that can be taken to mitigate noise that are proportionate in the circumstances of the case.

4.4 *Noise Insulation*

If approved the provisions of the Edinburgh Tram Line One and Two Bills will empower the promoter to set up a noise insulation scheme. This scheme will be as defined in the Noise Insulation (Railways and Other Guided Systems) Regulations 1996, which apply in England and Wales. Under this scheme noise insulation will be provided for residential properties, if tram noise reaches the qualifying façade levels:

- 68 dB $L_{Aeq\,(06h\,-\,00h)\,hours}$ during the day and evening; and
- 63 dB $L_{Aeq\,(00h\,-\,06h)\,hours}$ at night

Further details of the qualifying criteria and of the noise insulation package that will be offered are as set out in the Regulations.

Also, although it is intended that wheel squeal [1] on bends will be minimised through good design and operational practices, to address the possibility that this characteristic form of noise could, if it were to occur, cause sleep disturbance at night in residential properties, the promoter will also have discretionary powers to offer noise insulation (as otherwise prescribed under the Regulations) to affected residential properties taking account of the frequency and level of wheel squeal.

In addition, to address the possibility that for a particular reason a high peak noise level from the tram cannot be mitigated in an area where existing peak noise is currently low, noise insulation will be offered irrespective of tram L_{Aeq}

(1) Wheel Squeal is the distinctive tonal noise sometimes generated on very tight bends where tram wheel/track geometry or conditions are poor.

TIE00899939_1276

levels as follows. Where the tram free-field level exceeds $L_{Amax, slow}$ 82 dB more than twice an hour at night (2300-0700 hours) insulation will be offered provided the tram $L_{Amax, slow}$ is above the pre-existing ambient $L_{Amax, slow}$ by at least 5dB (or 3dB at the discretion of the promoter, depending on frequency and local circumstances). The ambient $L_{Amax, slow}$ will be the night-time $L_{Amax, slow}$ from all other noise sources that is routinely exceeded at least twice an hour in the hours when the tram operates. This noise insulation offer would be over and above any others that may be offered under this policy.

5 *VIBRATION*

Trackforms will be designed adjacent to sensitive receptor buildings using Best Practicable Means to keep within the guideline levels of Vibration Dose Value (VDV) given in BS6472, 1992 below which the probability of adverse comments is low

- Day (0700-2300 hours) 0.2 $m/s^{1.75}$; and
- Night (2300-0700 hours) 0.13 $m/s^{1.75}$.

In addition the specification for the design of the tramway will include a Peak Particle Velocity (PPV) level no higher than 2mm/s at 2m from the rails

6 *MAINTENANCE AND MONITORING*

The promoter is committed to maintaining the tram system, and in particular the wheel and rail surfaces, so as to minimise noise at sensitive receivers. For each section of the route a noise and vibration monitoring scheme will be established and results will be regularly reported. The noise and vibration monitoring scheme will be agreed with the City of Edinburgh Council's Environmental and Consumer Services department. Appendix 1 gives details of the proposed noise monitoring system and how it will avoid unnecessary increase in noise levels

The Promoter will give due notice to the City of Edinburgh Council's Environmental and Consumer Services department and potentially affected residents of plans to carry out any potentially noisy maintenance activities at night such as rail grinding

The operator will establish a policy on the appropriate use of vehicle audible warning devices in accordance with safe working practices, which will be

TIE00899939_1277

reviewed from time to time, for example if repeated complaints are received in certain areas.

The operator will co-operate with the City of Edinburgh Council's Environmental and Consumer Services Department in establishing appropriate sound levels for tram stop Public Address systems if complaints are received from occupiers of noise sensitive premises.

APPENDIX 1

NOISE MONITORING PROCEDURES

A list of representative noise monitoring locations will be agreed with the City of Edinburgh Council's Environmental and Consumer Services department in consultation with local residents groups. The list will be reviewed from time to time.

Tram noise measurements will be carried out as prescribed below in the following circumstances

- During commissioning of the scheme
- 3-6 months after commencement of passenger service.
- At intervals not exceeding 1 year thereafter.
- Upon reasonable request by the City of Edinburgh Council's Environmental and Consumer Services department.

At the agreed monitoring locations, measurements will be taken of the $L_{Amax,slow}$ and SEL noise levels of a pass-by of each of the vehicles on each track under normal operation. In the case of new works, the rails will be free from visible defects. The results of the noise monitoring will be published on the internet.

At any location, if the mean of the noise levels of all the vehicles measured on any one track is found to be 5 dB(A) or more greater than the mean measured on any previous occasion for an equivalent set of vehicles, then the track will be reground, or other appropriate work will be undertaken, as soon as reasonably practicable, assuming noise from particular vehicles has not skewed either average

Monitoring will also be used to prevent any particular vehicle becoming excessively noisy, as follows. In the event that the maximum noise level of any vehicle is found to be 5 dB(A) or more greater than the mean then the wheels of that vehicle will be scheduled for re-turning as soon as reasonably practicable

[redacted]

Director/Authorised Signatory
tie LIMITED

[redacted]

Director/Authorised Signatory
CONSTRUCCIONES Y AUXILIAR DE FERROCARRILES S.A. (CAF)

This is Schedule 21 referred to in the foregoing Tram Supply Agreement between tie Limited and Construcciones Y Auxiliar de Ferrocarriles S.A. (CAF)

SCHEDULE 21

REPORTING PERIOD END DATES

PERIOD END DATES (all Saturdays except 31st March)

CONSTRUCTION PERIOD					
	2007 / 08	**2008 / 09**	**2009 / 10**	**2010 / 11**	**2011 / 12**
1	28/04/2007	26/04/2008	02/05/2009	01/05/2010	30/04/2011
2	26/05/2007	24/05/2008	30/05/2009	29/05/2010	28/05/2011
3	23/06/2007	21/06/2008	27/06/2009	26/06/2010	25/06/2011
4	21/07/2007	19/07/2008	25/07/2009	24/07/2010	23/07/2011
5	18/08/2007	16/08/2008	22/08/2009	21/08/2010	20/08/2011
6	15/09/2007	13/09/2008	19/09/2009	18/09/2010	17/09/2011
7	13/10/2007	11/10/2008	17/10/2009	16/10/2010	15/10/2011
8	10/11/2007	08/11/2008	14/11/2009	13/11/2010	12/11/2011
9	08/12/2007	06/12/2008	12/12/2009	11/12/2010	10/12/2011
10	05/01/2008	03/01/2009	09/01/2010	08/01/2011	07/01/2012
11	02/02/2008	31/01/2009	06/02/2010	05/02/2011	04/02/2012
12	01/03/2008	28/02/2009	02/03/2010	05/03/2011	03/03/2012
13	31/03/2008	31/03/2009	31/03/2010	31/03/2011	31/03/2012

SERVICE PERIOD					
	2012 /13	**2013 / 14**	**2014 / 15**	**2015 / 16**	**2016 / 17**
1	28/04/2012	27/04/2013	26/04/2014	02/05/2015	30/04/2016
2	26/05/2012	25/05/2013	24/05/2014	30/05/2015	28/05/2016
3	23/06/2012	22/06/2013	21/06/2014	27/06/2015	25/06/2016
4	21/07/2012	20/07/2013	19/07/2014	25/07/2015	23/07/2016
5	18/08/2012	17/08/2013	16/08/2014	22/08/2015	20/08/2016
6	15/09/2012	14/09/2013	13/09/2014	19/09/2015	17/09/2016
7	13/10/2012	12/10/2013	11/10/2014	17/10/2015	15/10/2016
8	10/11/2012	09/11/2013	08/11/2014	14/11/2015	12/11/2016
9	08/12/2012	07/12/2013	06/12/2014	12/12/2015	10/12/2016
10	05/01/2013	04/01/2014	03/01/2015	09/01/2016	07/01/2017

11	02/02/2013	01/02/2014	31/01/2015	06/02/2016	04/02/2017
12	02/03/2013	01/03/2014	28/02/2015	05/03/2016	04/03/2017
13	31/03/2013	29/03/2014	31/03/2015	31/03/2016	31/03/2017
	2017 / 18	**2018 / 19**	**2019 / 20**	**2020 / 21**	**2021 / 22**
1	29/04/2017	28/04/2018	27/04/2019	02/05/2020	01/05/20
2	27/05/2017	26/05/2018	25/06/2019	30/05/2020	29/05/2021
3	24/06/2017	23/06/2018	22/06/2019	27/06/2020	26/06/2021
4	22/07/2017	21/07/2018	20/07/2019	25/07/2020	24/07/2021
5	19/08/2017	18/08/2018	17/08/2019	22/08/2020	21/08/2021
6	16/09/2017	15/09/2018	14/09/2019	19/09/2020	18/09/2021
7	14/10/2017	13/10/2018	12/10/2019	17/10/2020	16/10/2021
8	11/11/2017	10/11/2018	09/11/2019	14/11/2020	13/11/2021
9	09/12/2017	08/12/2018	07/12/2019	12/12/2020	11/12/2021
10	06/01/2018	05/01/2019	04/01/2020	09/01/2021	08/01/2022
11	03/02/2018	02/02/2019	01/02/2020	06/02/2021	05/02/2022
12	03/03/2018	02/03/2019	29/02/2020	06/03/2021	05/03/2022
13	31/03/2018	31/03/2019	31/03/2020	31/03/2021	31/03/2022
	2022 / 23	**2023 / 24**	**2024 / 25**	**2025 / 26**	**2026 / 27**
1	30/04/2022	29/02/2023	27/04/2024	26/04/2025	02/05/2026
2	28/05/2022	27/05/2023	25/05/2024	24/05/2025	30/05/2026
3	25/06/2022	24/06/2023	22/06/2024	21/06/2025	27/06/2026
4	23/07/2022	22/07/2023	20/07/2024	19/07/2025	25/07/2026
5	20/08/2022	19/08/2023	17/08/2024	16/08/2025	22/08/2026
6	17/09/2022	16/09/2023	14/09/2024	13/09/2025	19/09/2026
7	15/10/2022	14/10/2023	12/10/2024	11/10/2025	17/10/2026
8	12/11/2022	11/11/2023	09/11/2024	08/11/2025	14/11/2026
9	10/12/2022	09/12/2023	07/12/2024	06/12/2025	12/12/2026
10	07/01/2023	06/01/2024	04/01/2025	03/01/2025	09/01/2027
11	04/02/2023	03/02/2024	01/02/2025	31/01/2026	06/02/2027
12	04/03/2022	02/03/2024	01/03/2025	28/02/2026	06/03/2027
13	31/03/2022	31/03/2024	31/03/2025	31/03/2026	31/03/2027

Notes

- The later dates are more likely to change over time.
- The Reporting Periods run each year from 1st April to 31st March.
- Period One (P1) starts the first of April and generally finishes on the 4th Saturday following that date.
- Period Two (P2) starts on the next day (generally the 4th Sunday) and finishes on the 4th Saturday from that date.
- Periods Three through to Twelve follow at four weekly intervals.
- Period Thirteen starts the Sunday after the end Saturday of P12 and finishes on 31st March.

[redacted]

Director/Authorised Signatory
tie LIMITED

[redacted]

Director/Authorised Signatory
CONSTRUCCIONES Y AUXILIAR DE FERROCARRILES S.A. (CAF)

This is Schedule 22 referred to in the foregoing Tram Supply Agreement between tie Limited and Construcciones Y Auxiliar de Ferrocarriles S.A. (CAF)

SCHEDULE 22

INEO BUSTRACKER VEHICLE LOCATION SYSTEM

The Ineo BusTracker Vehicle Location System (VLS) is additional to (and discrete from) any system supplied under the TPDS (Tram Position & Detection System) heading.

The BusTracker system is already employed by Lothian Buses and **tie** wish to be able to display to Bus Control the position and status of the city's trams in relation to their buses in real time.

This will mean that points and traffic light/signals control for the tramway will remain with TPDS, and TPDS will show the tram's position on the network to the Tram Control room only.

To enable this, the following equipment needs to be fitted to each tram. This equipment will be supplied free of charge to the Tramco for incorporation into each vehicle at the factory. Maintenance of the system will be the responsibility of the equipment manufacturer (Ineo):-

- Main Module – to be fitted at the "A" end of the tram (size 110mm deep x 380mm wide x 500mm high)
- Aerial – to be fitted at the "A" end of the tram in a position to allow ready connection to the main module, yet away from obvious sources of e.m.i. (size 160mm diameter x 80mm high)
- Driver Consoles – one to be fitted in **each cab** dashboard (size 230mm wide x 105mm high x 40mm deep – recessed into dashboard. The exact location will need to be agreed between Tramco and **tie**/OpCo.
- A smoothed 24 volt dc electrical supply to the main unit at the "A" end
- A combined data/power cable (specification to follow) to be run from the "B" end cab console to the Main Module at the "A" end. This will need to be installed through the vehicle cabling runs including across the articulations. This cabling must meet the same fire criteria as the rest of the tram wiring.

[redacted]

Director/Authorised Signatory
tie LIMITED

[redacted]

Director/Authorised Signatory
CONSTRUCCIONES Y AUXILIAR DE FERROCARRILES S.A. (CAF)

This is Schedule 23 referred to in the foregoing Tram Supply Agreement between tie Limited and Construcciones Y Auxiliar de Ferrocarriles S.A. (CAF)

SCHEDULE 23

TRAM SUPPLIER'S PROPOSALS

See separate Schedule 23

Where there is any conflict between the information contained therein and the ER's, the ER's shall take precedence.

The exterior styling will be developed from the indicative option included in the BAFO.

[redacted]

Director/Authorised Signatory
tie LIMITED

[redacted]

Director/Authorised Signatory
CONSTRUCCIONES Y AUXILIAR DE FERROCARRILES S.A. (CAF)

INDEX

1. TECHNICAL PROPOSAL

1.1. TRAM TECHNICAL AND PERFORMANCE SPECIFICATION

1.2. TECHNICAL PROPOSAL APPENDICES

1.2.1. Structural Damage Repair

1.2.2. Battery Sizing Calculation

1.2.3. Reliability, Availability and Maintainability Plan

1.2.4. Safety Management Plan

1.2.5. Tram Technical Information v11

1.2.6. Tram Testing and Commissioning Plan

1.2.7. Night Partition

1.2.8. Portable Conductor's Panic Button

1.2.9. Under-run Guard

2. QUALITY

2.1. QUALITY PLAN

2.2. MANAGEMENT, ORGANISATION AND KEY PERSONNEL

3. DRAWINGS

4. TECHNICAL QUESTIONS

4.1. TQ 1001 – CANT & CANT GRADIENT

Use or disclosure of the proposal data is subject to the restrictions noted on the title page of this proposal

4.2. TQ 1002 – STEPPING DISTANCE

4.3. TQ 1003 – PANTOGRAPH DETAILS

4.4. TQ 1004 – DKE & CLEARANCES

4.5. TQ 1005 – TRAMSTOP CLEARANCE FOR TNAGENT TRACK

4.6. TQ 1007 – RESISTANCE TO ADVANCE CURVE

4.7. TQ 1008 – KIEPE VOLTAGE CHARACTERISTICS

4.8. TQ 1009 – HV(AC) HEATING WHEN STABLED

5. APPENDIX - POSSIBLE SUPPLIERS TECHNICAL DESCRIPTIONS

5.1. CAB HVAC (MERAK)

5.2. SALOON HV (MERAK)

5.3. PROPULSION EQUIPMENT (KIEPE)

5.4. PROPULSION EQUIPMENT (ELIN)

5.5. RUN TIME SIMULATION FOR ETN (KIEPE)

5.6. RUN TIME SIMULATION FOR ETN (ELIN)

5.7. PASSENGER COUNTING SYSTEM (ACOREL)

5.8. PASSENGER INFORMATION SYSTEM (SEPSA)

5.9. CENTRALISED CONTROL UNIT SYSTEM (SEPSA)

Use or disclosure of the proposal data is subject to the restrictions noted on the title page of this proposal

5.10. CENTRALISED CONTROL UNIT SYSTEM (TRAINTIC)

5.11. EVENT RECORDER SYSTEM TECHNICAL SPECIFICATION

5.12. CCTV SYSTEM TECHNICAL SPECIFICATION

5.13. PANTOGRAPH (SCHUNK)

5.14. AUXILIARY CONVERTER & BATTERY CHARGER (SEPSA)

5.15. WHEEL DAMPING (SCHREY & VEIT)

Use or disclosure of the proposal data is subject to the restrictions noted on the title page of this proposal
USB00000086_0003

1.2 TRAM TECHNICAL AND PERFORMANCE SPECIFICATION BAFO

INDEX

1. GENERAL 6
1.1. ELECTRO MAGNETIC COMPATIBILITY 9
2. PERFORMANCE 10
2.1. ACCELERATION 10
2.2. MAXIMUM SPEED 10
2.3. BRAKE PERFORMANCE 10
2.4. REDUCED PERFORMANCE 11
2.5. POWER 11
3. CARBODIES 12
3.1. GENERAL CONSIDERATIONS 12
3.2. STRUCTURE 13
3.3. DRIVER CAB 14
3.3.1. Energy Absorption device 14
3.3.2. Driving desk 14
3.3.3. Driver seat 17
3.3.4. Front End 19
3.3.5. Cabinets 19
3.3.6. Interface with Passengers 19
3.3.7. HVAC 20
3.4. PASSENGER SALOON 21
3.4.1. Passage Between Cars 21
3.4.2. Windows 23
3.4.3. Interior Seating Arrangement 24

Use or disclosure of the proposal data is subject to the restrictions noted on the title page of this proposal
USB00000086_0004

3.4.4. Seats 24
3.4.5. Luggage Racks 25
3.4.6. Handgrips 25
3.4.7. Lighting 25
3.4.8. Interior Linings 26
3.4.9. Fire Protection 27

4. BOGIES 29

4.1. BOGIE FRAME 30
4.2. COMPLETE WHEELSET 31
4.2.1. General 31
4.2.2. Axle Body 31
4.2.3. Braking items in the wheelset assembly 31
4.3. WHEELS 31
4.4. AXLE-BOXES 32
4.5. SUSPENSION 32
4.5.1. Primary suspension 33
4.5.2. Secondary Suspension 33
4.6. DAMPERS 34
4.7. CARBODY-BOGIE CONNECTION 34
4.8. TRACTION MOTORS 34
4.9. GEAR UNITS 35
4.10. ENGINE-GEAR UNIT COUPLING 35
4.11. GEAR UNIT-WHEEL HUB COUPLING 35
4.12. BOGIE BRAKE EQUIPMENT 36
4.12.1. Brake linings 36
4.12.2. Parking brake 37
4.13. AUXILIARY BOGIE EQUIPMENT 37
4.13.1. Electrical equipment 37
4.13.2. Flange lubrication equipment. 38
4.13.3. Sanding equipment. 38
4.13.4. Electromagnetic Shoe 38
4.13.5. Corrosion Protection 39

Use or disclosure of the proposal data is subject to the restrictions noted on the title page of this proposal
USB00000086_0005

4.13.6. Re-Railing 39

5. COUPLERS 41

6. TRACTION 43

6.1. PANTOGRAPH 43

6.2. LIGHTNING ARRESTOR 44

6.3. CIRCUIT BREAKER 44

6.3.1. Technical Information 44

6.4. TRACTION INVERTER 45

6.4.1. Line Voltage 45

6.4.2. Line current and detection of differential fault 45

6.4.3. Input contactors 45

6.4.4. Input Filter 46

6.4.5. Power electronics 46

6.4.6. Traction Control Electronics 46

6.5. TRACTION MOTOR 47

6.5.1. General characteristics 47

6.5.2. Technical Information 48

6.6. BRAKE RESISTORS 48

6.6.1. Insulation 49

6.6.2. Power and operating rate 49

6.6.3. Temperature 49

7. SALOON HEATING AND VENTILATION SYSTEM 50

7.1. VENTILATION 51

7.2. HEATING 54

7.3. PREHEATING CONDITIONS 55

7.4. ODOUR AND TOUCH 56

8. CENTRALISED CONTROL UNIT 57

8.1. SYSTEM FUNCTIONS 57

8.2. SYSTEM ARCHITECTURE 57

9. DOORS 58

Use or disclosure of the proposal data is subject to the restrictions noted on the title page of this proposal
USB00000086_0006

9.1. MECHANICAL ITEMS 59
9.1.1. Support Items 59
9.1.2. Plugging/Unplugging 59
9.1.3. Drive Items (installed in the header) 59
9.1.4. Electromechanical Brake 59
9.1.5. Emergency Unlocking (from inside) 60
9.1.6. Unlocking (From outside) 61
9.1.7. Lock-off Mechanism 63
9.2. DOOR LEAVES 63
9.3. ELECTRIC ITEMS 63
9.3.1. Photocell 63
9.3.2. Obstacle Detection 63
10. AUXILIARY POWER SUPPLY SYSTEMS 63
10.1. STATIC CONVERTERS 64
10.2. BATTERY CHARGER 67
10.3. BATTERY 68
11. BRAKE 71
11.1. VEHICLE PERFORMANCE DURING BRAKING 71
11.1.1. Service Braking 71
11.1.2. Emergency Deceleration 72
11.1.3. Security Deceleration 72
11.2. JERK 72
11.3. STATIC PERFORMANCES 73
11.3.1. Holding Brake 73
11.3.2. Parking brake 73
11.3.3. Performance in towing/pushing mode 73
11.4. IMPLEMENTATION 73
11.5. ELECTROHYDRAULIC BRAKE SYSTEM 73
11.5.1. System Description 73
12. INFORMATION AND COMMUNICATION SYSTEM 75
12.1. PASSENGER INFORMATION SYSTEMS 75

Use or disclosure of the proposal data is subject to the restrictions noted on the title page of this proposal
USB00000086_0007

12.1.1. Passenger Destination Information System 75
12.1.2. General Passenger Information System 76
12.1.3. Passenger Safety Information System 76
12.2. MEDIA AND COMMUNICATIONS CONTROLLER 77
13. PASSENGER COUNTING INFORMATION SYSTEM 78
14. EVENT RECORDER SYSTEM 80
14.1. SYSTEM FUNCTIONS 80
14.2. DEAD MAN DEVICE 80
15. CCTV 82

ANNEXES

ANNEX 1.2.1: TRAM DRAWINGS AND DESIGNS

ANNEX 1.2.2: POSSIBLE SUPPLIERS TECHNICAL DESCRIPTIONS

ANNEX1.2.2.1: TECHNICAL DESCRIPTION PROPULSION SYSTEM

ANNEX 1.2.2.2: RUN TIME SIMULATION

ANNEX 1.2.2.3: PASSENGER COUNTING SYSTEM (ACOREL)

ANNEX 1.2.2.4: PASSENGER INFORMATION SYSTEM (SEPSA)

ANNEX 1.2.2.5: CENTRALISED CONTROL UNIT SYSTEM

ANNEX 1.2.2.6: PANTOGRAPH (SCHUNK)

ANNEX 1.2.2.7: AUXILIARY CONVERTER AND BATTERY CHARGER

ANNEX 1.2.2.8: WHEEL DAMPING

ANNEX 1.2.3: TRAM TESTING AND COMMISSIONING

ANNEX 1.2.4 TENDER VARIANTS

ANNEX 1.2.5: RESPONSE TO PENDING QUESTIONS

Use or disclosure of the proposal data is subject to the restrictions noted on the title page of this proposal
USB00000086_0008

1. GENERAL

The proposed vehicle is an autonomous, bidirectional, double-cab articulated 100% low-floor LRV. The general layout of the tram is shown in drawings Q.00.072.10 H1 and H2.

The interior layout of the proposed tram is modular in design so that the number and position of the luggage racks can be modified easily any time, changing them by a 3 module seat assembly.

The main characteristics of the proposed tram are:

- Autonomous, bidirectional, double cab, articulated unit
- 100% Low Floor
- Capacity of 248 (4p/m^2) passengers with 80 (32,2%) seated passengers.
- 2 wheelchair spaces
- Approx. 7,6 m^2 of floor surface for luggage racks.
- Consisting of 7 articulated modules with total length of 42.3 metres and maximum width of 2,650 metres
- Supported on 4 bogies: 3 motor bogies and a trailer bogie
- 6 doors per side for the ease of passenger boarding.
- Self supporting low alloy steel carbody structures; high elastic limit (corten) structure in the underframe and ferritic stainless steel on the sides and roof (easy to repair).

The tram's general architecture is ready to modify the number of its modules with minor works.

As described in section 3. of this proposal, the tram has been designed with a really strong structure, which will give to the LRV a service life of more than thirty years; and with ferritic stainless steel sides and roof, which will make really easy (and cheap) the reparability of the trams (the repair and welding methods will be equivalent to those ones used in buses).

The tram consists of seven modules:

- Two end modules, each with a cab, supported on a motor bogie, with a single leaf access vestibule, and articulated on the intermediate carbodies.

Use or disclosure of the proposal data is subject to the restrictions noted on the title page of this proposal
USB00000086_0009

- Two central modules on the ends of which the intermediate carbodies are supported. One of this central bogie, on which a pantograph is located, is supported by a trailer bogie and the other central modules is supported on a motor bogie.

- Three intermediate modules, suspended between the end carbodies and the central carbodies, where the double leaf access vestibules are located.

The floor is at a height of 350 mm along the passenger saloon. There are no ramps at the entrances and therefore, they are at a 350mm height.

The cabs are located at the end carbodies and they extend across the whole width of the carbody.

The central carbodies has an area designated for 2 persons with disabilities. Persons with reduced mobility can access this area via the 4 double leaf doors of the carbody. To this end, the access doors of this car shall be fitted with an exterior PRM access indicator.

The unit is not equipped with specific items to aid PRM access as the recommended access from the platforms is easy, thanks to the low floor level. All the disabled access requirements are met by the offered tram.

➢ **Carbody**

The carbodies are self supporting structures constructed with a low-alloy steel and high elastic limit (Corten) structure in the underframe and ferritic stainless steel on the sides and roof.The following are just some of the characteristics of the units:

- ➢ PRM area with the specific functionality of the nearest doors. This area can be used to transport bicycles.

- ➢ Unobstructed gangways along the whole of the unit.

➢ **Main Onboard Equipment**

- Traction equipment

The system has three independent traction units and each contains the traction inverter, the brake resistors and four traction motors. Each traction inverter is double, with each controlling 2 motors.

The two level inverters, directly connected to the catenary, are based on the latest generation of IGBT power transistors. These are specifically used to obtain the best rail traction performance.

The system is designed to assure the required functionality and to obtain the highest reliability, availability, maintainability and safety performances.

Use or disclosure of the proposal data is subject to the restrictions noted on the title page of this proposal
USB00000086_0010

- Auxiliary Equipment

Each unit shall be fitted with 2 auxiliary converters located in the B module, powered at 750 Vdc, to supply the 3x400Vac line.

The 24 Vdc direct current loads are supplied from the G module battery charger, which shall also perform the controlled charging of the battery.

The proposed Auxiliary Converters are based upon the use of the latest generation of IGBTs with a variable voltage and frequency inverter (VVVF). They are prepared to start when fed from the overhead line, irrespective of the state of charge of the battery (Flat Battery Start).

Along with the auxiliary generation equipment, the units shall also be equipped with the following auxiliary equipment:

- 1 pantograph + lightning arrestor + circuit breaker
- Latest generation Ni-Cd battery
- Hydraulic brake equipment.
- Independent Air Conditioning System for the driver cab.
- Heating and Ventilation System for passenger saloon.
- Electric sliding plug type doors.
- Pneumatic compressor to supply sanders and flange lubricators.
- Passenger communication and information system which includes the PA system, exterior and interior signs, station announcer.
- Tram event recorder (Black Box).
- Onboard computer equipment.
- Rear view cameras.
- …

- Onboard Computer Equipment and Train Control

The system shall consist of a Central Control unit in each cab car, which shall support direct Inputs and Outputs via car bus RS-485.

It shall also consist of a Cab Terminal on the driver cab desks, connected via an RS-485 series line to the Central Unit, and a signal panel.

Use or disclosure of the proposal data is subject to the restrictions noted on the title page of this proposal
USB00000086_0011

- **Bogies**

The vehicle is supported on 4 bogies, with three motor bogies (end bogies and one of the intermediates) and a trailer bogie.

The motor bogies have four motors, which are assembled together with their shafts longitudinally, each of which is firmly attached to the gear unit cases to form one single assembly. This gear-motor unit is completely suspended from the bogie frame, with a number of interspaced rubber elastic components.

The trailer bogies are identical to the motor bogies except for the motoring facilities.

- **Design**

The design procedure follows the most avant-garde standards regarding comfort, best use of space, harmonious environments, etc., without neglecting those elements that, due to the stress they could be subjected to, are the product of a specific design.

The offer considers the exterior and interior design proposals which figure in Annex 1.2.1"Tram Drawings and Designs".

A full scale tram mock-up will be manufactured to demonstrate areas critical to operation and access. The mock up will include the entire cab and a representative portion of one saloon, including a vestibule with at least one operational pair of bi parting doors and space reserved for wheelchair use. The mock-up will show the exterior form and livery.

1.1. ELECTRO MAGNETIC COMPATIBILITY

The Trams and their sub-systems will not generate excessive, nor be susceptible to, electro-magnetic interference and will comply with EN 50121 as appropriate.

Different design criteria will be implemented from the start of the design process in order to comply with these standards.

We understand that Infraco is responsible for establishing the criteria in matter of Edinburgh Tram Network infrastructure. Tramco will contribute with Infraco in order to comply with the established criteria.

These are the tests that will be conducted regarding EMC issues.

- Radiated Emissions Measurement according to EN 50121

- Measurement of EMC levels (miliTesla) inside the train.

Use or disclosure of the proposal data is subject to the restrictions noted on the title page of this proposal
USB00000086_0012

2. PERFORMANCE

2.1. ACCELERATION

The unit, under maximum load, has an average acceleration of 1.2 m/s^2 from 0 to 35 Km/h. and an average acceleration of 0.8 m/s^2 from 0 to 80 km/h.

The calculation conditions for acceleration are as follows:

- The supply voltage for the performance calculation is 750 V.
- Rotating masses: 7 % of the Tare
- Level track section
- Wheel half worn
- Maximum load conditions (AW4)
- Jerk of 1 m/s^3.

Over acceleration shall be limited to 1 m/s^3 but this can be regulated in a range of 0.5 – 1.2 m/s^3.

2.2. MAXIMUM SPEED

The maximum rated speed is 70 Km/h with a maximum specific speed of 80 Km/h (in tramway sections and distances previously studied by CAF). The traction equipment shall gradually reduce the effort so that the unit does not exceed 80 km/h. Should the unit exceed a speed of 82 km/h (due to a slope on the track) the traction equipment shall automatically apply the brake regardless of the status of the traction master controller until the speed falls below 80 km/h.

The maximum nominal speed shall be calculated with new wheels for normal service and under AW4 load conditions.

2.3. BRAKE PERFORMANCE

The electrodynamic brake is the priority braking system for the units with the purpose of reducing the application of the friction brake to a bare minimum.

The friction brake shall be applied to complement the electric brake to reach the required braking effort (“blending”). This friction brake shall also operate in the event of a complete or partial electric brake fault.

Service deceleration between 0 – 80 km/h in accordance with the specifications is 1.20 m/s^2 +/-0.05 (Jerk: 0.8-1.0 m/s^3).

The above performances shall be calculated for the following conditions:

Use or disclosure of the proposal data is subject to the restrictions noted on the title page of this proposal
USB00000086_0013

- Any supply voltage
- Maximum load conditions (AW4)
- Rotating masses: 7 % of the Tare
- Level track section

2.4. REDUCED PERFORMANCE

The units will be designed so as to meet the service conditions outlined in the following cases:

- **Unit with 1 traction drive unit isolated.**

  Start up on a slope under maximum load to provide service up to the end of the journey with a certain amount of degraded performance.

  Also the traction operation is designed so that the maximum speed is automatically limited to the preset value for this type of traction fault. The traction equipment shall gradually reduce the effort so that the unit does not exceed 40 km/h. Should the unit exceed a speed of 42 km/h (due to a slope on the track) the traction equipment shall automatically apply the brake regardless of the status of the traction master controller until the speed falls below 40 km/h.

- **Empty Unit Pushing a Unit with Maximum Load**

  Rail traction performance is such that this operation can be carried out safely on a maximum gradient to the end of the line or to a point on the line where replacement has been planned.

  An extremely high level of adhesion is required along with good track conditions.

2.5. POWER

The nominal power for the vehicle, in accordance with the standard CEI 60349 (previously CEI 349) is 61kW per motor at 1541 rpm. The total nominal power of the vehicle is 732kW.

Use or disclosure of the proposal data is subject to the restrictions noted on the title page of this proposal
USB00000086_0014

3. CARBODIES

3.1. GENERAL CONSIDERATIONS

The carbody has been designed to meet the transport requirements in the technical fields of operation and aesthetics.

The carbodies are designed to provide adequate protection to the passengers should an accident occur. This is especially the case for driving personnel should there be a head on collision with another train, cars, and also specific protection by means of a barrier should a member of the public be run over.

Regarding the interior arrangement and decoration, solutions have been found to maximise the interior comfort based on accessibility, ergonomics, visibility, comfort and safety criteria. Also, a pleasant environment has been developed using warm tones and ample lighting.

As well as maximising passenger comfort, work was focused on reducing maintenance and cleaning times. To reduce these times we have focused on assembly simplicity and accessibility to all vehicle items. In this way we have removed all areas which were difficult to access or that could lead to the accumulation of paper or dirt.

The carbodies are self supporting with low-alloy steel structures for the underframe, and stainless steel structures for the sidewalls and roof.

One of the main characteristic of the proposed materials (described in the following sections) is their easy solderability by conventional ways; characteristic that facilitates the repairing of damaged elements, in comparison with other materials as the aluminium or austenitic type steels. The repair and welding methods will be equivalent to those ones used in buses.

Both carbody ends have fibreglass-reinforced polyester body-ends with a metal shell to protect the driver in the event of an accident.

The interior decoration is functional and is mainly moulded fibre glass reinforced phenolic resins with a M1 fire rating or higher.

The general dimensions of the proposed vehicle are included in the drawing Q.00.072.10 B H1 and H2 and can be summarize in the following ones:

Maximum length over carbody structure	42.7m
Maximum width of LRV	2.65m
Saloon low floor height above rail level	350mm
Passenger Door clearance height	2028mm

Use or disclosure of the proposal data is subject to the restrictions noted on the title page of this proposal

Double Passenger door width (free opening)	1300mm
Single Passenger door width (free opening)	800mm
Seat Width per passenger	min. 450mm
Interior Headroom	2183mm
Gangway width	min. 650mm
LRV under-floor clearance, from top to rail, fully laden with fully worn wheels	50mm (bogie area)

3.2. STRUCTURE

The structures of the modules are self-supporting, i.e. the load bearing structure of the underframe, the sides, the body-ends and the roof. The assembly in this way is able to withstand those loads laid down in standard EN12663 – 2000 for P-V type vehicles.

The underframe is Corten steel, and the sidewalls and roof are ferritic stainless steel.

From a structural viewpoint, the sides of the vehicle constitute the web of a conceptual beam represented by the structure of the carbodies. These consist of a number of pillars and rails lined with an outer sheet for the purposes of continuity, and the entire unit is firmly attached to the underframe and the roof to form a comprehensive whole. Openings are made for doors and windows in this shell, and in all cases these are framed by pillars and rails to prevent deformations in the lining sheets. The material used is ferritic stainless steel.

The roofing structure consists of two cant rails over which trusses have been attached, and sheet steel has been used as lining. This material is also ferritic stainless steel.

The project includes the construction of a polyester body-end for the cab body-end to enhance the aesthetics of the vehicle. Behind this a resistant structure shall be fitted to ensure driver safety.

The proposed carbody structure is manufactured by different type of steels depending on the placement and the loads to withstand:

- S355J2G1W/WP according to UNE-EN 10155: Low alloy Corten type steel with high elastic limit for interior and exterior frame sills, head stocks, beams and frame supports

- S355J2G3 according to UNE-EN 10025: Carbon steel in profiles and thick plates of the frame.

Use or disclosure of the proposal data is subject to the restrictions noted on the title page of this proposal
USB00000086_0016

- X2CrNi12 according to UNE-EN 10088: Ferritic Stainless Steel (or equivalent) in the rest of the carbody structure except the frame.

The inter-car body-end consists of vertical pillars and one cross member.

The carbody resistance shall be supported with calculations for equivalent existing carbodies.

3.3. DRIVER CAB

The two end modules have a driver cab which extends across the whole available width. Necessary apparatus for driving and control of the train are located in this cab and the driver position is slightly off centre.

The inside of the cab shall be adjusted correctly to the capacities and requirements of the driver taking account of the accessibility to apparatus and systems for the maintenance staff.

3.3.1. Energy Absorption device

The cab structure will include an energy absorption system with an anticlimber element integrated.

This system will permit to absorb all the crash energy in frontal and rearward collisions without causing permanent deformation of the body structure at speeds of 5km/h or below.

The system will consist on the following elements:

- Anticlimber central plate
- 2 energy absorbers:

The central anticlimber plate will be attached to the cab frame by 2 energy absorbers. The absorbers are made by aluminium fuses and will be easily changeable in case of important crash. Before and after a crash it will be easy to verify the status of the aluminium fuses.

The system will be installed at a similar height as the cars and trucks fenders.

3.3.2. Driving desk

A control desk is fitted in each end car cab for train driving, where the apparatus, indicators, controls and items necessary for the running of the convoy are located. This is under the complete control of the driver, always in accordance with the requirements established in the Technical Conditions, with regards to apparatus such as lighting, clearances, etc.

Use or disclosure of the proposal data is subject to the restrictions noted on the title page of this proposal
USB00000086_0017

The construction of this desk is conceived in accordance with the most recent ergonomic considerations with the application of finishing techniques that provide pleasant looks with prolonged duration. Changes required by TIE regarding the design of the desk such as position of the controls etc. will be considered in the Design Stage.

For those items to be laid in the driver desk, as well as those to be located in auxiliary cab cabinets, or in the upper part of the desk, several factors such as the frequency of use, and the response speed they involve shall be taken into account .

The cabs have a rear view camera at both sides of each cab-end providing the driver with a good view of the side areas. There is also a rear view mirror inside the cab, allowing the driver to see the passenger area, and a front camera allowing reverse circulation.

The layout of driver controls will be subject to ergonomic study in order to reduce the multiplicity of commands and to simplify the task of driving the LRV.

To this end:

- the organisation of the driver's console is divided in the following manner:
    - a primary zone, comprising information and controls of primary importance directly linked to the driving of the LRV and operation of the doors, easily accessible from the seated position
    - a secondary zone comprising controls and information of secondary importance used occasionally while driving and easily accessible from the seated position.
    - a tertiary zone comprising controls and lights of tertiary importance not used while driving. In order to activate these controls, the driver may have to leaf the normal seated position.
- the tram diagnostic system will provide the driver with a display facility (screen and luminous lights) situated in the primary control zone, which indicates the condition of the tram, in particular:
    - the functions or equipment which are isolated;
    - the status of each door (by way of a diagram);
    - the status of the power system;
    - the status of the Pantograph (raised / lowered);
    - the status of each braking system / unit;
    - each fault affecting normal operation;

Use or disclosure of the proposal data is subject to the restrictions noted on the title page of this proposal
USB00000086_0018

- procedures to follow in order to correct this fault if within the scope of the operating regulations.

The system will also appropriately record faults to allow fault diagnosis to be carried out at the depot by maintenance personnel. The type of faults recorded in this manner, their identity and the memory capacity of this function will be subject to tie approval at the design phase.

The “Reverse/Forward” selector will be monitored by the event recorder.

The following figure shows a layout of driver controls used in a previous LRV project:

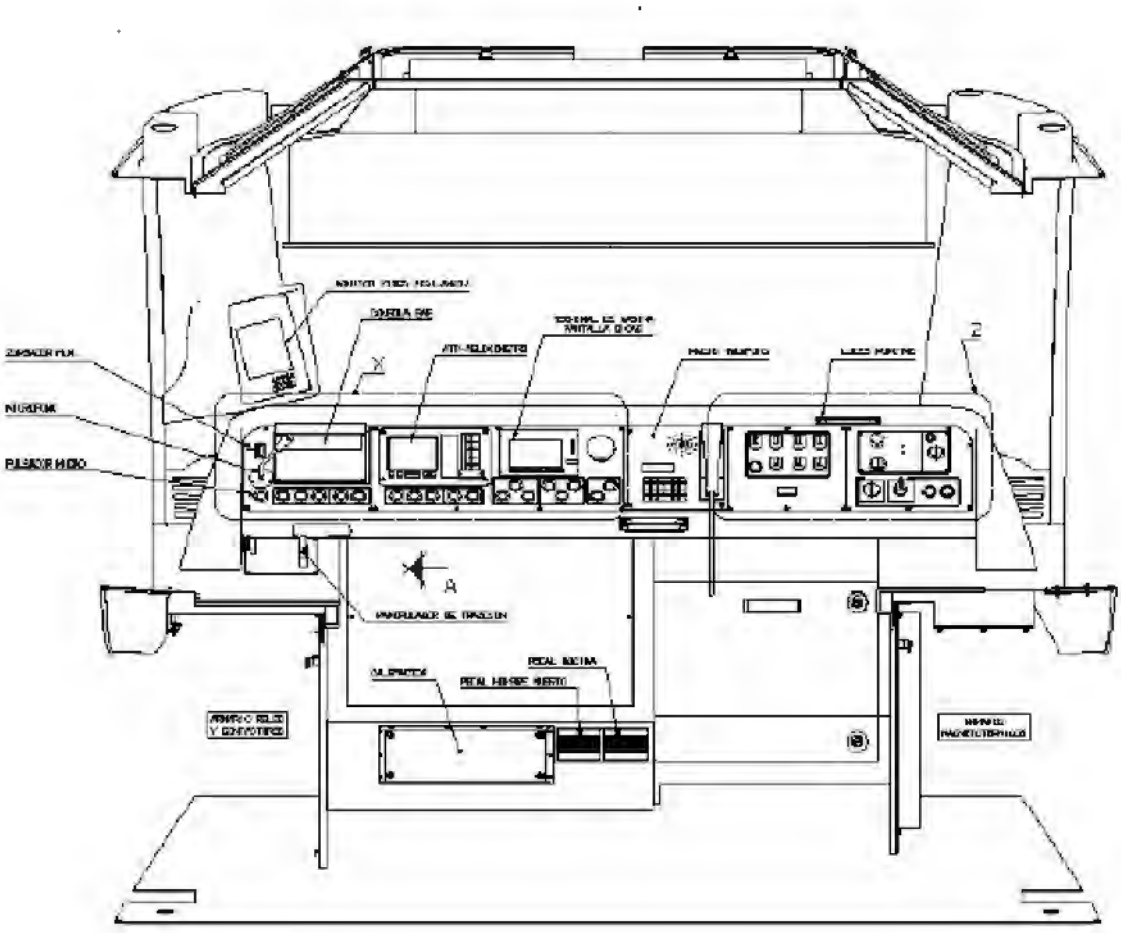

Figure 1. Driver Controls layout of Seville Project

On leaving the driver’s cab, the LRV remains prepared but secure from interference from unauthorised persons with driving and power controls isolated. The following steps must be followed to change the driving cab maintaining the LRV prepared:

Use or disclosure of the proposal data is subject to the restrictions noted on the title page of this proposal
USB00000086_0019

- Stop the tram and locate the traction/braking handle in position “0”.
- Push the “cab change” pushbutton.
- Locate the “reverse forward” selector in position “0”
- Remove the cab enabling key from the cab
- Insert and turn till “HAB” the cab enabling key in the other cab

(NOTE: Pushing the “cab change” pushbutton, the Supervisory Control and Communication System (SCCS) energizes the “cab change” relays during 15 minutes to give to the driver enough time to arrive and habilitate the other cab; during this 15 minutes the battery remains connected to the loads. If during this time no cab is habilitated, the SCCS proceeds to invalidate the “cab change” function and shut offs the LRV.)

3.3.3. Driver seat

The driver seat shall be the result of an ergonomics investigation which shall contemplate various aspects such as the location of the desk, sizes, etc. The cab will also be provided with a portable seat for the instructor, this being easily able to reach the emergency brake control. In order to meet TIEs requirements the redesign of the cab interior layout is foreseen. Thus, the location of the instructor portable seat will be decided at the Desing Stage, once the cab layout has been totally defined.

A grab handle is located in the vicinity of this seat.

The following figure shows a driver seat used in a previous tram project:

Use or disclosure of the proposal data is subject to the restrictions noted on the title page of this proposal
USB00000086_0020

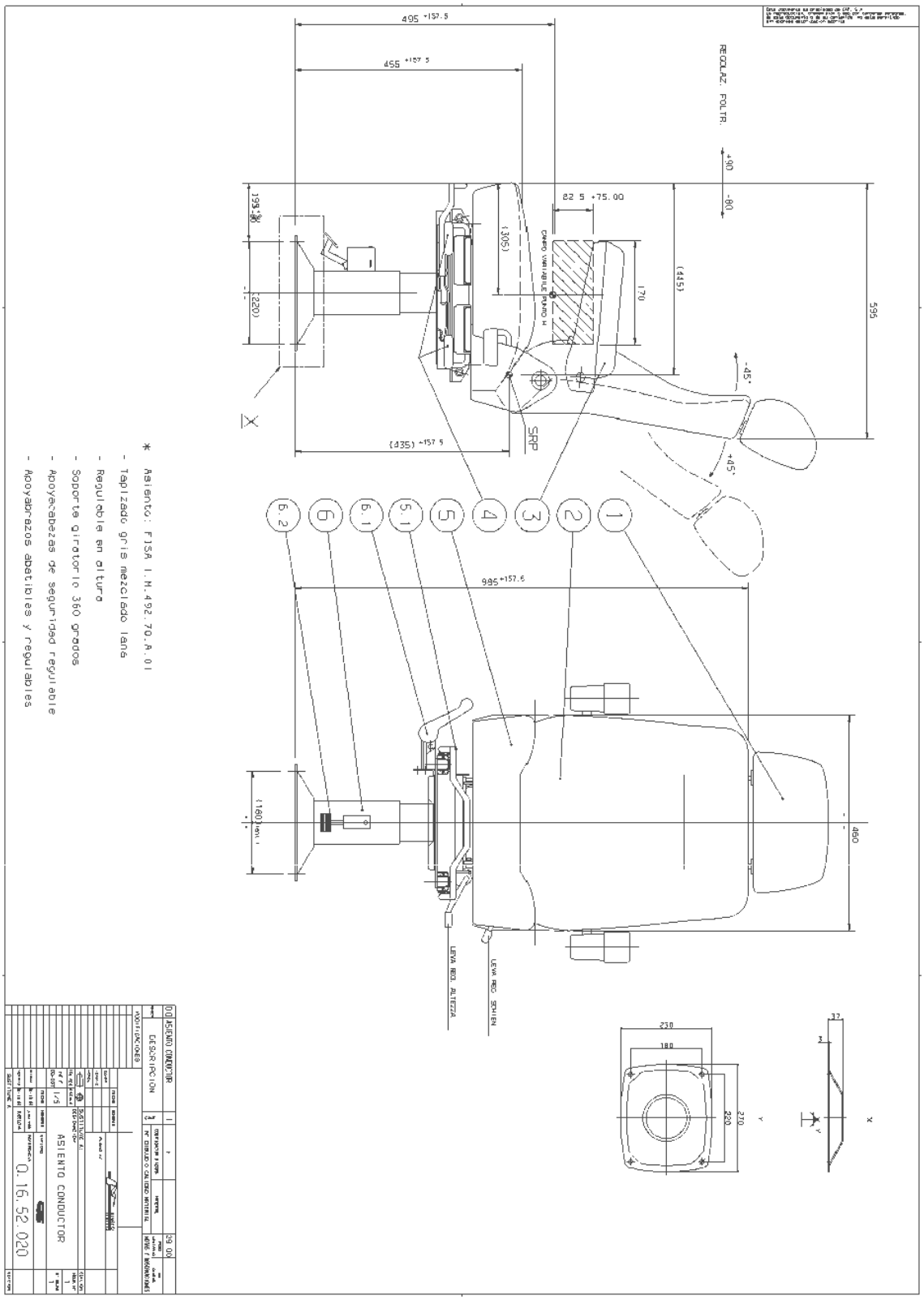

Figure 2. LRV Driver Seat used in Sevilla Project

Use or disclosure of the proposal data is subject to the restrictions noted on the title page of this proposal
USB00000086_0021

3.3.4. Front End

Both carbody ends have fibreglass-reinforced polyester body-ends providing the possibility for improved aesthetics. There shall be a metal frame behind this body providing adequate protection to the driver should there be an accident.

The sizing of the cab glazing panels gives drivers perfect visibility of the track and signals, and also of passenger access areas.

The front glazing panels are shock-proof laminates and can withstand the impact that could occur at maximum speed with passengers due to an obstacle or similar occurrence. The glazing panels have a non-visible demisting system which covers most of the surface area.

Each of the cab are provided with a fabric sunblind and a mirror which gives the driver a view into the saloon when sat at the driver's seat.

3.3.5. Cabinets

At the rear of the driver cab, cabinets which contain the electronic control systems for equipment, such as, communications or black box, are located.

3.3.6. Interface with Passengers

The cab is segregated from the passenger saloon by a glazed partition. Access to/from the saloon will be by means of a glazed, manually-operable, hinged door. The partition is easy to open by the driver and will have a reliable locking mechanism that prevents unauthorised entry to the cab. The cab door is provided with a handle to allow the driver to evacuate the cab quickly in an emergency.

It is possible to retain the door in an open position when required.

All partition glazing is toughened to facilitate emergency egress in the event of lock failure.

The following figure shows the glazing partition offered and used in a previous tram project:

Use or disclosure of the proposal data is subject to the restrictions noted on the title page of this proposal
USB00000086_0022

Figure 3. Cab glazing partition

3.3.7. HVAC

The tram is fitted with one air conditioning unit per cab.

The air conditioning unit is compact, divided on the inside in a compressor-condenser area, which contains a compressor and a condenser coil, and an evaporator area, containing an evaporator coil, electric heating elements and an impeller fan.

Temperature measuring probes are also located inside: for the return air and impelled air.

The cab air conditioning general capabilities and characteristics are the following ones:

Refrigerate Power ..... 4000 W

Heating Power ..... 3500 W

Refrigeration Capability (with 28ºC and 45% Humidity)..... 24ºC (with and airflow of 620m^3/h)

Heating Capability (with -5ºC)..... 21ºC

Use or disclosure of the proposal data is subject to the restrictions noted on the title page of this proposal
USB00000086_0023

3.3.7.1 Air Circulation

The air conditioning area of the HVAC unit takes in exterior air via the exterior air filter side hatch and takes in return air via the lower trapdoor of the return air filter.

The condensation fan forces the flow of exterior air via the condenser coil to sink both the heat generated inside the cab and in the compressor circulation operation. This fan only operates when the cooling system so requires.

The impeller fan circulates the mixture of exterior and return air in the evaporator coil, which is activated or deactivated depending on the energetic demand of the cab. This fan is always operating and impels air through the plenum ducting.

3.3.7.2 Cooling System

The liquid coolant in the liquid tank flows through a pipe to the expansion valve. The purpose of this valve is to regulate the amount of coolant flowing through the pipe to produce the required cooling and to distribute this liquid via the evaporator coil, where it evaporates, cooling the tubes of this coil and hence, cooling the air circulating through them.

The cold coolant gas coming out of the evaporator coil at low pressure is compressed by the compressor where it leaves in gas form at high pressure and overheated. Once compressed, the coolant gas reaches the condenser coil, restarting the cycle.

3.3.7.3 Heating System

Heating is realised by means of two electric heating elements capable of heating the air impelled towards the cab.

3.3.7.4 Preheating Conditions

The required power in order to preheat the two driving cabs from a temperature of 0ºC to 18ºC is of 4kW. The required time is aprox. 60min.

3.4. PASSENGER SALOON

3.4.1. Passage Between Cars

Tram modules are interconnected by unobstructed gangways which allow continuity between them with hardly any narrower sections.

Passengers may move through this area easily and safely when the tram is moving over curves.

The connection between the unit carbodies is realised by means of mechanical articulated connections at the underframe and roof level. The gangway is installed between this upper and lower mechanical connection.

Use or disclosure of the proposal data is subject to the restrictions noted on the title page of this proposal
USB00000086_0024

The gangway is designed to adapt to all the movements and stresses that could occur whilst the tram is in motion, providing a water tight connection with the maximum possible safety guarantee.

The proposed vehicle provides an unobstructed gangway in the lower 1400 mm floor area. In this way there is ample clearance at the shoulder height of the passengers.

3.4.1.1 Articulation

The seven carbodies making up the unit are semi-rigidly coupled, forming a single operating unit. The mechanical connection between the ends of each carbody is performed by means of a main articulation at the underframe level and by means of another auxiliary articulation at the roof level.

The design of this articulation permits free rotation between carbodies with respect to the vertical and transversal axes, maintaining at all times twisting rigidity with respect to the longitudinal axis.

The main articulation consists of two steel castings, one upper and one lower, and one axial articulation bearing. These components are connected by the bearing. Both articulation bodies are screwed to the lower stand. In combination with the upper articulation point, this connection combined with a hinge articulation only permits movements around the Z-axle, whereas the combination with a pitching articulation permits movements around the Z- and Y-axle.

The hinge articulations, are located in 4 of the 6 gangways, prevent rotation with respect to the transversal axis, providing the unit with the required rigidity for circulation in a single unit. The gangway with pitching articulation allows the unit to travel along sections of track with vertical curves. These roof level connections help the main articulation in the transmission of the lateral efforts during the transmission of torsional loads.

To uncouple the cars the gangway must be released together with the upper and lower mechanical connections.

3.4.1.2 Gangway

The passenger saloons of the cars making up the unit are interconnected by unobstructed gangways which allow continuity between them with hardly any narrower sections.

The gangway consists of the following items:

Fixing Frame

The fixing frame is the item that supports the undulated bellow and fixes it to the car body end. It is comprised of an upper item, a right side item and a left side item.

Use or disclosure of the proposal data is subject to the restrictions noted on the title page of this proposal
USB00000086_0025

The rubber section is fitted on the outside of the fixing frame elements and serves to ensure water tightness between the undulated bellow and the fixing frame when the unit is mounted.

Undulated Bellow Assembly

The undulated bellow assembly comprises of an undulated bellow and two floor covering valances, a roof, a false ceiling and connection fabrics.

- **Corrugated Bellow**

The bellow, with its wave shape, is made up of special, flexible fabrics and bellow frames. The fabric waves are produced using special bellow fabric, sewn and fitted under pressure on aluminium sections that connect the waves to each other. The frames provide stability to the shape and the fabric provides the flexibility of the bellow. Both form the structure giving rigidity and maintaining the shape of the assembly. Each wave has a liquid drain hole in a low central position.

- **Floor Covering Valance**

The floor covering valances, like the undulated bellow, consist of waves of flexible fabric fitted between aluminium sections.

The floor covering valances are fixed to the lower surface of the bellow and on each bellow frame. They are fixed to the car by means of screwed-on strips at the valance connection flaps.

- **False ceiling**

The false ceiling, like the undulated bellow, is made up of waves of flexible material. The false ceiling serves to conceal the air conditioning ducting from view where it passes along the roof area.

Special attention shall be given to the optimization of this area where the air passes to minimise load losses, to ease air circulation from one end to the other of the units should an HVAC unit fail.

- **Roof**

The roof is fixed in the upper part of the undulated bellow and serves as an aesthetic seal with the side edge of the vehicle.

3.4.2. Windows

Fixed windows shall be fitted on the sidewalls of the passenger area of the unit. It shall be possible to open the windows to ventilate the vehicle in an emergency situation should the HVAC system break down. The windows that can be opened shall remain locked by means of a square lock once opened or closed.

Use or disclosure of the proposal data is subject to the restrictions noted on the title page of this proposal
USB00000086_0026

The window arrangement shall provide a good outside view of the passengers in a seated or standing position.

Tempered glass of 5mm with anti-reflection properties are used for the saloon side windows.

3.4.3. Interior Seating Arrangement

The seating arrangement can be seen in drawing Q.00.072.10. The seating arrangement is modular in design and can be change modifying the luggage rack space (replacing a luggage racks by a 3 seat module) or by changing the numbers of door per side.

It is worth pointing out that for all of these we have aspired to optimise the following parameters:

- Transport capacity
- Luggage Rack space
- Ease of circulation inside the vehicle and smooth flow between the vehicle and platform.
- Aesthetics and general comfort inside the car.
- Safety.
- Average journey times

We have also taken into account the conditions required to guarantee the location and mobility of persons with disabilities.

3.4.4. Seats

The proposed seats are ergonomic and the material used is easy to maintain and vandal proof. They are cushioned type seats. The fabric used for the seats will be Edinburgh Tartan (Holdsworth or any other supplier).

During the design phase anthropometric designs will be taken into account (height, length, width, feet, etc.) with respect to the population in their forecast evolution over the next fifteen years.

They have a high resistance to fire and low emission of smoke and are designed to resist the most common types of vandalism, with designs tested on multiple rail systems. They comply with BS 6853, Cat 2.

The width of each seat will be 450 mm. In this way a wider gangway is achieved in the 2+2 areas, and hence increased passenger flow, without reducing the comfort of the seated passengers. Seat rows will be pitched at least at a distance of 752mm.

Use or disclosure of the proposal data is subject to the restrictions noted on the title page of this proposal
USB00000086_0027

Due to the lack of any floor height difference within the available area of the tram, all the seats in the offered tram are accessible without using steps.

Vertical poles will be fitted on the backrests on the gangway side of the seats in order to facilitate the passenger flow and the comfort of the standees.

Please see drawings of a possible seat in Annex 1.2.1.

3.4.5. Luggage Racks

The luggage Racks arrangement can be seen in drawings Q.00.072.10 B H1 and H2. The proposed luggage racks are distributed evenly about the vehicle and are situated over the bogies, near to the vestibules. Two of the luggage racks will have enough space at floor level, without any pedestal, facilitating the access of heavy and big luggage. The racks will be made by metallic profiles and with 2 intermediate shelves made by glass or metal. The Floor surface occupied by the luggage racks will be of approx. 7,6 $m^{2.}$

The luggage racks will be easy to be dismounted and the luggage racks space will be easily replaceable by a 3 seats module.

Please see drawings Q.000.72.47 and Q.000.72.48 in order to see the design of the luggage racks.

3.4.6. Handgrips

The number and location of the poles and handgrips for passengers has been thoroughly investigated so that when the car is full the maximum amount of passengers of all sizes can be held and in a way that access and alighting via the doors and movement along the cars is not obstructed.

The proposed handgrips/poles are tubular or solid soft shaped items with no loose ends.

They consist of tubular items made of stainless steel. They shall be smooth, with no loose ends and adaptable to the hand.

Vertical poles will go from one side of the seat backrest to the tram ceiling and they will be arranged in a way that the movement along the tram results easy.

Please see drawing Q.00.072.34 in order to see the arrangement of the grab poles.

3.4.7. Lighting

The number of lamps proposed is sufficient to achieve uniform lighting protected by a specially designed technical false ceiling.

The lighting arrangement is lengthways, in two parallel lines on both sides of the gangway. The lights are supplied with a continuous voltage of 24Vdc.

Use or disclosure of the proposal data is subject to the restrictions noted on the title page of this proposal
USB00000086_0028

The passenger saloon lighting is at a height of 1 m from the floor, with a value between 280-350 lux.

The proposed lighting fixtures are produced in painted steel with the polycarbonate diffuser with M1F1 characteristics.

The passenger saloon and driver cab lighting is constantly on, even during short interruptions of the supply voltage (interruptions of up to 30 seconds).

The unit is also fitted with emergency lighting. These lights guarantee the minimum level of lighting required according to the applicable standards, for at least one hour.

3.4.8. Interior Linings

3.4.8.1 Floor lining

The proposed floor lining has the following characteristics:

- Resistance to heat and sudden changes of temperature.
- Good sound and heat insulation.
- Resistance to vibrations.
- Prevents water ingress underneath.
- Resistant against chemical agents.
- Fireproof.
- Rot-proof.
- Punch and tear proof.
- Slip-proof.
- Easy to fit when partial or total replacement is required, with a minimum colour contrast with the rest of the surface.
- Easy to procure as a spare part.
- Easy to clean with water, without the floor or supporting structures being damaged.

The proposed floor consists of 14mm thick birch plywood with a 0,5mm thick aluminium skin with M1F1 characteristics. The assembly thickness shall be 15 mm. This type of panel provides excellent water tightness, resistance, soundproofing and fireproofing.

Use or disclosure of the proposal data is subject to the restrictions noted on the title page of this proposal
USB00000086_0029

A synthetic rubber (Mondo), complying with BS6853 Cat.2 standard, is bonded to the floor. The entire thickness of this flooring has good heat and sound insulation and slip proof characteristics, even in humid conditions.

3.4.8.2 Wall Coating

The wall coating consists of fibre glass reinforced phenolic resin panel modules with a gel coat coating, treated such that it cannot splinter or burn, M1F1 qualification, and is hard enough to prevent passengers scratching it.

The interior of the side wall coatings is insulated with glass wool panels with an aluminium face (M1 F1). CAF believes that the characteristics provided by this type of material are appropriate as we are dealing with vehicles which usually travel on the surface.

3.4.8.3 Ceiling lining

With regards to the wall interior, it is proposed to use painted aluminium plates (M0F0) and fibreglass reinforced phenolic resin panels. It should be pointed out that the use of aluminium sections reduces the possibilities of the geometry of these coatings due to the difficulty to form the metal materials with curves on different planes (rounding). For this reason, for those parts of the ceiling with a complex shape it is proposed that fibreglass reinforced phenolic resin panels be used (M1F1 characteristic).

Just as with the side walls, glass wool panels with aluminium face (M1F1) are used to insulate the ceiling coatings.

3.4.9. Fire Protection

The proposed materials have been chosen, considering the functional resistance, durability, safety and maintenance requirements.

All the materials which are to be used have been studied according to two aspects:

- On an individual basis according to their particular characteristics.
- Globally as part of an assembly, taking into special consideration for this case the possible effect on the passenger due to its performance facing a fire source and the consequences: emission of toxic gases, opaque gases, etc.

DESCRIPTION	PROPOSED MATERIAL	FIRE /SMOKE CHARACTER. (NF F 16 101)
Floor	Syntethic rubber (Mondo)	BS 6853 Cat.2
Floor panels	Plywood	M1 F1
Side wall coatings	Phenolic resin	M1 F1

Use or disclosure of the proposal data is subject to the restrictions noted on the title page of this proposal
USB00000086_0030

DESCRIPTION	PROPOSED MATERIAL	FIRE /SMOKE CHARACTER. (NF F 16 101)
Ceiling linings (Material according to the geometry)	Phenolic resin Painted aluminium	M1 F1 M0 F0
Lighting ceiling fitting	Aluminium	M0 F0
Lighting diffuser	Polycarbonate	M1 F1
Saloon seat shroud	Phenolic resin	M1 F1
Saloon seat frame	Copper steel	M0F0
Ceiling insulation	glass wool with aluminium sheet	M1 F1
Side wall insulation	glass wool with aluminium sheet	M1 F1
Rear body end insulation	glass wool with aluminium sheet	M1 F1

The Trams are designed to be resistant to fire in accordance with the relevant UK standard (BS6853, Cat 2) or the international equivalent.

Use or disclosure of the proposal data is subject to the restrictions noted on the title page of this proposal
USB00000086_0031

4. BOGIES

The vehicle is supported on 4 bogies, with three motor bogies, drawing L.00.480.00, and a trailer type bogie, L.00.480.10.

The motor bogies have four motors, which are assembled together with their shafts longitudinally, each of which is firmly attached to the gear unit cases to form one single assembly. This gear-motor assembly is completely suspended from the bogie frame, with a number of interspaced rubber elastic components.

Each motor drives a gear unit, which transmits traction torque to the wheel axle via a toothed coupling, and this allows movement caused by the strokes of the primary suspension. A resilient star type coupling is mounted between the motor and the gear unit.

The primary suspension is based on bell-type rubber and steel components which also steer the axles over the horizontal plane.

The secondary suspension consists of coil springs, together with progressive elastic components at the end of the stroke. Damping is carried out externally by hydraulic dampers in parallel with the springs.

Carbody support on bogies is directly on the 4 coil springs of the secondary suspension which support directly above the bogie frame. Traction and braking efforts are transmitted via two drag links.

The planned braking system is 1 disk per wheel, which are attached to the wheels. In the event of an emergency, two electromagnetic rail brakes are used on each bogie. The brake operation is electro-hydraulic and accumulator spring.

The parking brake is also by an accumulator spring. To release it a pressure chamber and a secondary piston are fitted allowing the brake to be released from the cab via a secondary source of oil pressure. There is also a manually operated rapid mechanical release device acting on the brake callipers themselves.

The main characteristics of the bogies are as follows:

Wheel diameter (new/used).....590/510 mm

Wheelbase.....1800 mm.

Primary suspension ..... Rubber-steel

Secondary suspension .....Coil springs

Type of brake .....Disk

Number of disks per bogie.....4

Use or disclosure of the proposal data is subject to the restrictions noted on the title page of this proposal
USB00000086_0032

Brake actuation:..... Hydraulically-operated floating clamp with accumulator spring

Electromagnetic rail shoes, per bogie.....2

Maximum Speed ..... 70 Km/h.

Figure 4. Motor Bogie Photo

4.1. BOGIE FRAME

The bogie frame consists of two longitudinal members interconnected by two cross-members.

Both the cross-members and the longitudinal members are box-section, and consist of plate welded using electric arc welding. The material used is S 355 NL grade steel according to EN 10113.

The frame is H shaped and all the required frame supports are appropriately machined for fixing of the primary suspensions, the drag links, etc.

A number of these supports are E300-520 M grade cast steel in accordance with the UIC 840-2 specification.

Once the frame has been assembled and welded, it is subject to annealing to remove any stress caused by welding.

The geometry has been designed for a rational distribution of efforts, preventing concentration of stresses on joints between parts and sharp changes in section.

Use or disclosure of the proposal data is subject to the restrictions noted on the title page of this proposal
USB00000086_0033

The admissible stress levels as well as the fatigue limits are considered to correspond to those indicated in Rapport ORE Question B12/RP 17 for this type of material. The working limits of the material considered for work under exceptional loads is the elastic limit of the material.

The soundness of the main welds on the frame shall be checked by contrasting ultrasonic and magnetic particle procedures.

The various checking and control sheets for finished components shall be drawn up, as shall the monitoring and control modes for the major stages of manufacture.

4.2. COMPLETE WHEELSET

4.2.1. General

The wheelsets are freewheel type, and consist of a welded box-type beam, the ends of which have, on a higher plane, cylindrical journals. The wheels are assembled on to journals via bearings.

The current return devices and sensors shall be mounted on the wheelset assembly.

4.2.2. Axle Body

There are no wheelsets as such in the bogie assemblies, where the wheels are freewheeling, with the support journal boxes of each pair of wheels being connected by means of a box-shaped structure fabricated by means of welding. Thus the assembly formed is similar to a wheelset assembly but does not link the rotation of the two wheels.

The wheel hubs which incorporate the bearings to allow free movement are assembled onto these journals.

All the welding of these items, given that they are safety parts, shall be manufactured using a process similar to that of the frame and controlled the same as this when in non-destructive magnetic particle and ultrasonic tests.

4.2.3. Braking items in the wheelset assembly

The brake components included on the wheelsets are the brake discs. These are mounted on one side of the wheel hub, with one per wheel.

The discs are self-ventilating on which a friction ring is fitted, manufactured in special cast iron. The fastening system absorbs thermal expansion caused during the braking processes.

4.3. WHEELS

Elastic wheels are proposed, consisting of a series of resilient blocks between the hub and tyre. Regarding the material, the elastic wheel uses C3N steel material (to/

Use or disclosure of the proposal data is subject to the restrictions noted on the title page of this proposal
USB00000086_0034

UIC 812-1) at the centre of the wheel and ring, and B6T steel (to/ UIC 810-1) in the tyre assembly.

The bogies are planned for the profiling of the wheels in the service pit, and for this reason some areas have been projected to support of the load arms.

The proposed design will incorporate wheel damping equipment in order to reduce noise levels. Please see information in Annex 1.2.2.8.

4.4. AXLE-BOXES

The axle box does not operate as such since they do not have bearings, and therefore consist merely of a yoke on which to rest the primary suspension springs, firmly attached to the false shaft since the wheels run freely over it. It can be called “axle-box bridge”.

The assembly is projected to prevent ingress of dirt and also to prevent any grease from escaping.

The upper section of the body has a rubber stop, the function of which is to prevent metal-to-metal contact in the event of a breakdown in the primary suspension.

The bearings housed inside the axle box have an interior diameter of 170 mm. The make is a well-known railway equipment supplier.

The bearings are lubricated using lithium soap-based grease with additives, under extreme pressure, consistency 2 type Shell 2760 B.

The bogies shall have current return devices isolated in the axle box by means of a suitable adaptor. Their function is to return the traction current to the rail via the axle, and to protect people against accidental high voltage diversions. To this end, the facility has been provided with devices with the sole function of returning current, and others with the function of protecting staff.

There are 2 per bogie.

These devices shall have replaceable brushes of an appropriate section for the current which is to run through them.

Their general arrangement shall be carried out in accordance with the VDE 0115 and DIN 57115 specifications.

4.5. SUSPENSION

The vehicle's suspension comprises of two stages, primary and secondary, thus achieving optimum vertical and transverse comfort levels and proper running of the bogie on straights and curves alike.

Use or disclosure of the proposal data is subject to the restrictions noted on the title page of this proposal
USB00000086_0035

4.5.1. Primary suspension

The axle steering system, is responsible for transmitting the steering stresses from the axles to the bogie frame, as well as the traction, brake and transverse stresses (i.e. the stresses that occur on a horizontal plane).

This is performed by the primary suspension springs themselves, which have been designed to be free of any elements subject to friction.

The rigidity of the primary suspension springs on the horizontal plane provides the proper longitudinal and transversal union between axles and bogie frame. The rigidity values chosen in the two directions for these springs, allow stable running of the vehicle throughout the speed range up to 70 km/h and proper curve negotiation and low track aggression. It also allows vertical displacement of the primary suspension.

The system is arranged to allow wheel turning on a pit lathe.

The primary suspension is responsible for transmitting the vertical load between the bogie frame and the wheelsets.

This is by means of rubber-steel bell-type springs fitted between the axle box bridges and the respective supports provided on the bogie frame. Its vertical flexibility has also been studied to achieve not only correct steering but also suitable performance vis-à-vis vertical irregularities in the track, ensuring as uniform a loading distribution as possible between bogie wheels and consequently taking optimal advantage of the adherence.

This rubber suspension has its own damping capacity, which makes it unnecessary to use external dampers.

The compression stop of the suspension, located on top of the axle-box, is fitted with a rubber part in order to prevent direct metal-to-metal contact. To limit the extension, there is a flange which limits the stroke of this suspension, thus allowing the bogie to be lifted with the axles hanging.

4.5.2. Secondary Suspension

The secondary suspension consists of 4 coil springs, mounted directly between the carbody and bogie frame having elastic items in between. The rotation of the carbodies vis-à-vis the bogie is absorbed by transverse deformation of the coil springs.

This suspension has a rubber stop system, concentric with the coil spring that comes into operation when the maximum load situation is reached, making the suspension progressive and limiting the maximum stroke.

Vertical damping of this suspension is hydraulic, for which purpose vertical hydraulic dampers are provided for each side of the bogie.

Use or disclosure of the proposal data is subject to the restrictions noted on the title page of this proposal
USB00000086_0036

The suspension is fitted with the corresponding stops to limit displacement (extension and compression), allowing the carbody to be lifted with the bogies hanging during re-railing procedures.

The suspension also has a system of wheel wear compensation to keep the height of the floor constant. This consists of shims fitted beneath the springs in the secondary suspension.

The transverse suspension uses the same suspension springs, and for this purpose they have adequate transversal rigidity. This suspension is complemented with elastic stops with progressive rigidity to absorb the dynamic impact produced in this direction, limiting the maximum admissible displacement. A transverse hydraulic damper is also provided to damp any oscillations which may occur in this direction.

4.6. DAMPERS

Bogies are equipped with secondary suspension vertical dampers as well as transverse dampers. Both are hydraulic. Their selection was made considering the maximum number of strokes allowed by the suspension, so that their stroke limit shall never be reached. The dampers are fastened by means of maintenance-free elastic rubber joints.

4.7. CARBODY-BOGIE CONNECTION

The carbody rests directly on the 4 secondary suspension springs with elastic items in between. Vertical load is thus transmitted onto the springs, whilst load corresponding to the horizontal plane is transmitted through the crossways twisting of said springs.

Progressive rubber stops are provided to limit relative movement between the body and the bogie.

4.8. TRACTION MOTORS

As mentioned in the section on general characteristics, each motor bogie has four motors which are fully suspended and mounted with their shafts arranged lengthways to the track.

The bogie is equipped with four asynchronous propulsion motors each of which is bolted to its corresponding gear unit, thus forming a rigid assembly. This assembly is suspended from two points of the corresponding frame supports located on the cross members by means of a system of elastic parts.

The gear-motor assembly can be dismantled from the side of the TRAM without having to lift the carbodies.

Use or disclosure of the proposal data is subject to the restrictions noted on the title page of this proposal
USB00000086_0037

4.9. GEAR UNITS

This assembly is located in the cinematic chain between the motor and coupling which transmits the gear efforts to the wheel.

Gear units are hypoid type.

Gear units are directly bolted to motors and are fully suspended.

The gear unit is dimensioned in such a way as to transmit the maximum efforts in both propulsion and braking, as well as those efforts arising from the vibrations caused by the rolling of the axles.

This type of gear unit offers silent operation.

The gear unit case is manufactured by casting and is suitably machined to allow for interior assembly of the gears and bearings.

Lubrication is by means of oil splashing for the gear wheel and by gravity for the pinion and bearings. To this end, an oil scraping system is installed which operates by concentrating part of the oil in a small container located on top of the gear unit, and by conduits machined in the case to channel the oil to the bearings.

The gear unit is fitted with an inspection lid for checking the interior condition of the gears, as well as with the corresponding drain and fill plugs and level indicator. One of the plugs is equipped with a magnetic separation system for metallic particles.

Protection against oil leaks or dirt ingress is provided by a system of labyrinths with no moving parts which could become subject to wear.

All the gear units will be subject to a rig running test to establish the corresponding control range, which will be subject to prior approval.

4.10. ENGINE-GEAR UNIT COUPLING

The two gear units are driven directly by the motor shafts by means of a star type resilient coupling. These couplings are designed to absorb the minor misalignments of the assembly and allow for detachment of the gear unit from the motors.

4.11. GEAR UNIT-WHEEL HUB COUPLING

The couplings are included as part of the cinematic transmission chain of torque between the gear unit and the wheels.

These parts are designed to transmit torque and are able to absorb the relative misalignments and shifts between their input and output shafts imposed by the movements of the shafts both on the vertical and horizontal plane.

They are toothed type, mounted between the cover of the hollow shaft at the gear unit output and the wheel hub.

Use or disclosure of the proposal data is subject to the restrictions noted on the title page of this proposal
USB00000086_0038

The coupling is balanced and homokinetic, creating no vibrations during operation.

4.12. BOGIE BRAKE EQUIPMENT

The bogie brake unit is a disc braking system. There is one per wheel and they are mounted on one side on the wheel hubs.

In addition, and to act as an emergency brake, two electromagnetic brake shoes are incorporated, arranged one on each side. These shoes provide additional braking power in the event of an emergency.

The unit is basically made up of the following parts:

- Disks.
- Braking callipers.
- Brake linings
- Parking brake.
- Electromagnetic rail brake shoes.
- Brake callipers

Activation of the brake pads against the discs is carried out by means of a hydraulic calliper system.

The number of callipers used is 1 per disc in all cases. In the case of motor bogies the brake callipers are fixed to the gear unit cases and in the case of the trailer bogies they are fixed to the axle box.

The callipers of the bogies consist of accumulator coil so that in the event of loss of hydraulic fluid, the brake pads are applied to the discs offering maximum braking. Therefore, the system operates with built-in safety. Under normal operation, the disc type accumulator springs incorporated in the callipers are held back by the hydraulic pressure being applied to the hydraulic pistons of the clamps. Upon braking, the pressure in the circuit is reduced so that the force of the accumulator springs is partially applied.

The brake units are equipped with an automatic gap adjustment system between pad and disc so that the gap remains constant regardless of the wear accumulated in both.

4.12.1. Brake linings

The quality of the material is one habitually used for these units, with no asbestos, zinc or lead in its composition.

Use or disclosure of the proposal data is subject to the restrictions noted on the title page of this proposal
USB00000086_0039

4.12.2. Parking brake

The parking brake for these bogies is by means of an accumulator spring. They are applied by releasing the hydraulic pressure in the circuit. Should it be necessary to release this brake to move the vehicle when the hydraulic brake equipment cannot be used there is a pressure chamber and a secondary piston allowing the brake to be released from the cab via a secondary source of oil pressure. There is also a manually operated rapid mechanical release device acting on the hexagonal nuts themselves on each of the pistons in the motor-bogie callipers.

This brake is designed to be capable of immobilising the Unit under maximum load on the maximum gradient.

4.13. AUXILIARY BOGIE EQUIPMENT

This heading includes several items that while not directly related with the bogies, are nevertheless mounted on them. It consists of the following:

- Electrical equipment.
- Slip protection equipment.
- Flange lubrication equipment.
- Tachograph and speedometer sensors.
- Sanding equipment.
- Electromagnetic brake shoes.

Most of these items are described below.

4.13.1. Electrical equipment

This heading covers the following elements:

- The current return device.
- Wiring.

The bogies are equipped with shunts between the axle boxes and the bogie frame, between the traction motors and the bogie frame, and between the bogie and the car body. These shunts allow the HV return current, or any fault currents that may be produced, to flow to the rails.

For connection between the axle boxes and the wheelsets, brushes are mounted specifically to carry these currents.

Four of these devices are mounted on the motor units, two for current return and two as earthing devices.

Use or disclosure of the proposal data is subject to the restrictions noted on the title page of this proposal
USB00000086_0040

Their location on the vehicle is in accordance with the specifications of VDE 0115 and DIN 57115.

The motor power-supply cables are attached to the bogies by insulated cable clamps and are connected to the cables from the car in junction boxes placed close to the bogies, to enable easy disconnection.

Connections to the auxiliary equipment on the bogies are via PMA-type flexible electrical cables that connect the car to the bogie via a fast-release main connector mounted in an accessible location. These connectors are waterproof and suitable for outdoor use.

4.13.2. Flange lubrication equipment.

The first axle of each end bogie incorporates a flange-lubrication system to reduce wear at curves. Its operation is interlocked with the position of the reversing system, in such a way that only the system on the leading axle will operate whichever way the car is moving.

An option with the provision of this equipment in only 6 trams is mentioned in chapter 1.2.4 “Tender Variants” of this tender.

4.13.3. Sanding equipment.

Track-sanding systems are located next to the four corner wheels of the 3 motor bogies, to improve adhesion between the wheels and the rails when necessary. This way, the sand shall be deposited on two locations on each rail per direction of travel. Operation of the sanders is interlocked with the direction of motion, so that only two sanders per bogie are active at any one time, depending on the direction.

The sand-boxes and the ejectors are mounted on the car bodies, while the bogies only carry the supports that hold and direct the flexible tubes that conduct the sand from the ejectors.

The ejectors are electro-pneumatic and the system is fitted with a small motor-compressor unit to generate the air pressure that ejects the sand.

Sand specification and contact details for a UK-based commercial supplier of this sand will be provided during de design phase.

4.13.4. Electromagnetic Shoe

For additional braking power in emergency situations, two electromagnetic rail brake shoes are mounted on the bogies, one on each side of the bogie.

The rail shoes are suspended from supports attached to the arms of the axle boxes. Suspension is by means of coil springs with a mechanism to regulate the height above the rails. This system has a bronze regulation nut to prevent seizing and to ease manipulation.

Use or disclosure of the proposal data is subject to the restrictions noted on the title page of this proposal
USB00000086_0041

Supports, to absorb the longitudinal and transversal braking efforts produced in these elements, are mounted onto the bogie frame.

The rail shoes are replaceable fixed-pole pieces with the magnetising coils inside them.

4.13.5. Corrosion Protection

Once the frame and cross member have been assembled, welded and treated, they are cleaned by sandblasting and then given a protective coating of rustproof primer.

Following this, they receive a double coat of paint, to achieve a total thickness of 120μ.

In the case of the general hardware, the sandblasting is substituted by degreasing, and these elements are given a paint thickness of 80μ.

4.13.6. Re-Railing

These are the most common methods used for re-railing motor bogies:

- **By means of a crane:**

With the help of NYLON slings or support beams, the end carbody is lifted, horizontally displaced and positioned back on the track.

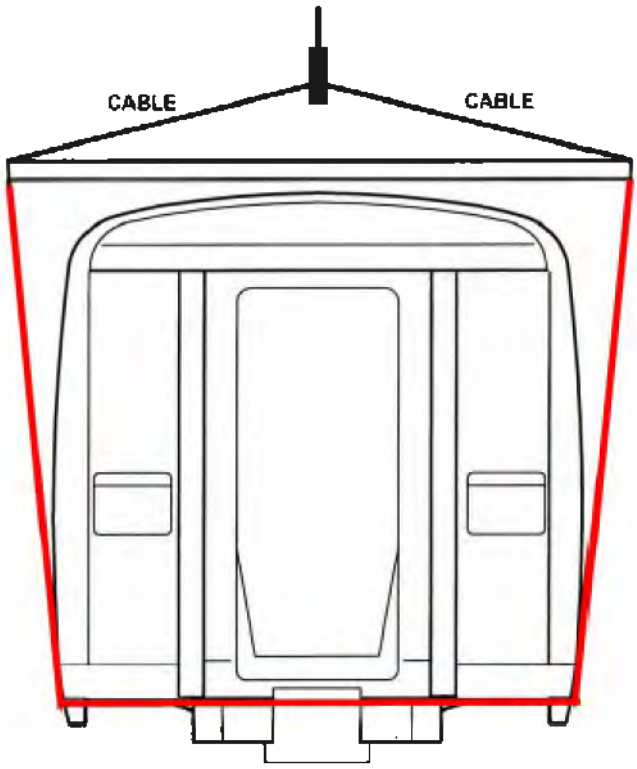

Figure 5. Re-railing procedure with nylon slings

Use or disclosure of the proposal data is subject to the restrictions noted on the title page of this proposal

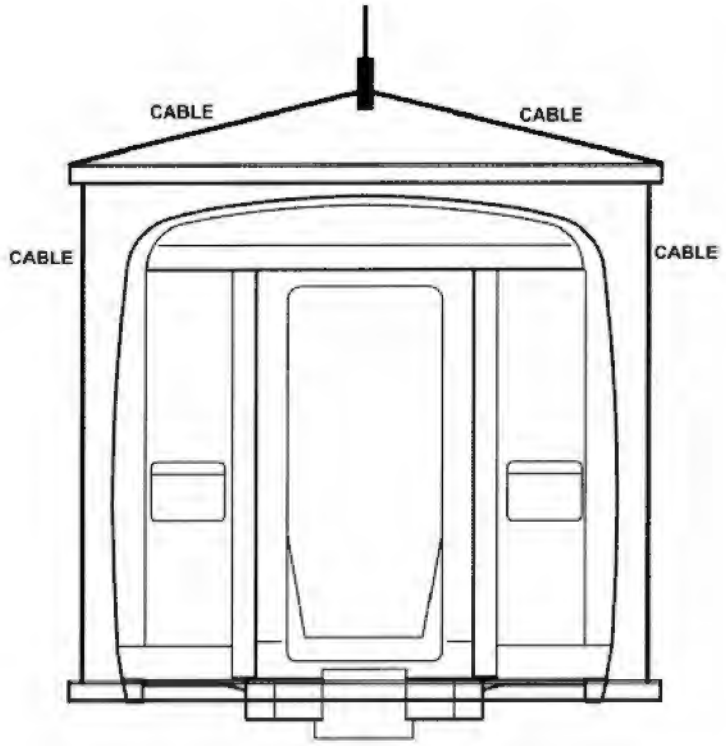

Figure 6. Re-railing procedure with support beams

- **By means of pneumatic bags and a re-railing equipment:**

The procedure is analogous to the one previously described.

Find bellow the position of the pneumatic air bags.

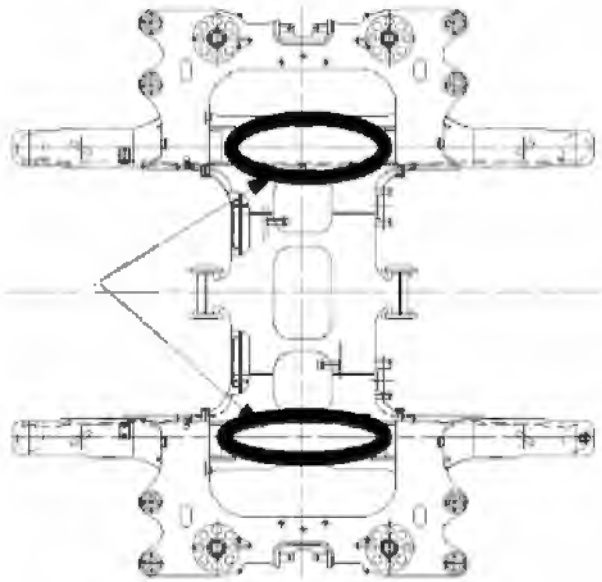

Figure 7. Position of the pneumatic air bags.

Use or disclosure of the proposal data is subject to the restrictions noted on the title page of this proposal

5. COUPLERS

The tram is provided with a permanently fitted “Albert” type coupler. This coupler is easily manoeuvrable and is designed such that it will perform as required on the worst combination of horizontal and vertical curves on the system.

For electrical connection between the units, an electrical hose with connectors at both ends is assembled between the two front sections separate from the couplers, and this provides continuity for the signal circuits required for control.

The following functions will be maintained in the rescue situation:

- release of brakes on the failed tram from the rescuing tram;
- phone communication between the cabs on both trams;
- use of the horn on both trams in case of a phone failure;
- ability to activate the safety brake in the leading cab of the failed tram when being pushed and thereby cutting traction on the rescuing tram;
- full use of exterior indicator lights on both trams;
- power supply to and control of the electric bell on the failed tram from the rescuing tram;
- control of the points control system from the front cab when the rescuing tram is pushing.

No tools will be required by drivers when coupling trams together in a rescue situation.

It will be arranged such that coupling can be effected with minimum delay.

The driver display in the active cab of the rescuing tram will indicate the brake status of tram being rescued.

The coupler has a draft bar equipped with an articulation which allows the bar to bend and hide itself or stow the automatic coupler below the carbody when it is not in use.

The couplers are stowable, concealed on the front section beneath a flap door, which must be opened by hand to carry out the coupling procedure.

A fairing allows the coupled vehicle to travel on the curvature radii on the track, without interferences in normal circulation conditions.

For the couplers to be positioned for coupling, two locking bolt devices holding them in place must be manually released. Once these have been released, the two

Use or disclosure of the proposal data is subject to the restrictions noted on the title page of this proposal
USB00000086_0044

sections of the coupler body which were folded away must be placed in the operational position using a locking system. For the reverse stowing procedure, the locking system must be released manually prior to refolding and concealment beneath the front section.

Use or disclosure of the proposal data is subject to the restrictions noted on the title page of this proposal
USB00000086_0045

6. TRACTION

A description of possible Traction System equipment is shown in Annex 1.2.2.1. The Dynamic Performance calculated with parameters described in document "Operations Simulations Report" can also be found in Annex 1.2.2.2.

6.1. PANTOGRAPH

Further information about the pantograph and drawings are included in Annex 1.2.2.6.

The pantograph receives the 750 Vdc high voltage current from the catenary, via the collection shoes and transmits it along its frame, supplying electricity to the whole vehicle.

The pantograph will be compatible with the Overhead Catenary System and the design will ensure that excessive wear of the carbon strips is avoided.

The design and functioning of the pantograph will conform to the European standard: EN 50206-2 'Railway Applications – Rolling stock – Pantographs: Characteristics and Tests – Pantographs for Metros and Light Rail Vehicles'.

Technical Specification

- Pantograph type/suppliers reference — Schunk
- Minimum height with insulators — 426 + 20 mm
- Minimum working height — 635 mm
- Maximum working height — 3800 mm
- Pan head width — 1981.2 mm
- Maximum length in lowered position — 2757 mm
- Total weight — 247 kg

Carbon strips

- Length — 1371.6 mm
- Material — Metalized graphite-carbon

Voltage

- Minimum — 525 VDC
- Nominal — 750 VDC

Use or disclosure of the proposal data is subject to the restrictions noted on the title page of this proposal
USB00000086_0046

- Maximum 950 VDC

Current

- Running (maximum) 1200 A
- Peak 1800 A
- Static upward force on carbon strips 70 N ± 10 N
- Maximum operating speed 80 - 100 km/h
- Type Air
- Lowering time 5 - 7 seconds
- Rising time 5 - 7 seconds

6.2. LIGHTNING ARRESTOR

The lightning arrestor protects the traction unit from high voltage peaks in the catenary caused by lighting bolts striking the catenary or some other type of discharge.

It shall be located close to the pantograph for total effectiveness and via a plate with a cross section of at least 16 mm^2.

6.3. CIRCUIT BREAKER

The train unit shall have one UR6-31 type Secheron, single pole, direct current, bidirectional circuit breaker to directly protect the traction circuit from short-circuit failures. In addition, the CB shall permit remote controlled opening and closing for connection and disconnection of the train and opening in differential faults.

The CB shall be housed in the standard Secheron casing for this CB and prepared to be mounted on the ceiling.

6.3.1. Technical Information

- Rated voltage ..... 1000 V DC
- Rated Current (In) ..... 1000 A
- Actuation time ..... 2 ms with di/dt >= 5.10 6 A/s
- Breaking capacity ..... 30 kA where τ = 15 ms
- Nominal thermal current: ..... 1850 A CC (preliminary)

Use or disclosure of the proposal data is subject to the restrictions noted on the title page of this proposal
USB00000086_0047

- Breaking capacity:..... 30 kA where τ = 15 ms
- Temperature range (In = 1000 A) .....-25 °C…+40 °C
- Temperature range (In = 750 A) .....-25°C…+80°C
- Protection grade..... IP 55 (standardised insulated housing)

Solenoid details (electrical retention):

- Rated voltage ..... 24 V DC
- Making nominal power ..... 835 W
- Nominal retention power ..... 2.5 W

Auxiliary contacts

- Rated voltage/current.....1 A / 24 V DC
- Type .....6 NA and 6 NC

6.4. TRACTION INVERTER

6.4.1. Line Voltage

The traction system shall measure the line voltage after the high speed circuit breaker

This measurement shall be made in the traction inverter and this information shall be sent to the control and monitoring equipment on the train via the serial connection. The information shall be presented to the driver.

6.4.2. Line current and detection of differential fault

The traction inverter shall detect the differential faults that may occur in the equipment.

For the differential fault control, the line current transducer(s) can be used together with the return transducers (installed within the traction box) or differential relays also installed inside the inverter.

In case of differential fault detection the traction system shall open the circuit breaker control loop resulting in immediate opening.

6.4.3. Input contactors

The inverter shall be equipped with an input contactor so that the traction inverter can be disconnected. These contactors shall allow the isolation of the inverters even when the inverter is working at maximum power.

Use or disclosure of the proposal data is subject to the restrictions noted on the title page of this proposal
USB00000086_0048

It shall be possible to isolate each of the 2 inverters separately from the cab.

6.4.4. Input Filter

The filter characteristics are appropriate to:

- Reduce the catenary voltage ripple.
- Protect the inverter against over-voltages and sudden voltage drops.
- Have a high impedance before the harmonics generated by the inverter itself.

The inverter is fitted with a preload circuit (contactor + preload resistance) which shall allow the condenser charge current to be limited during start up. The pre-charge circuit (including the resistor) is housed inside the inverter box.

6.4.5. Power electronics

The brake chopper comprises of two independent circuits discharged on each of the brake resistors.

The traction inverter must always maximise the current returned to the catenary. Only when the catenary voltage reaches the limit established in standard IEC 60163 shall the brake chopper be activated.

The traction inverter consists of two independent semi-inverters. Each of these semi-inverters shall supply two motors.

The inverters are three phase, connected directly to the catenary.

The inverter shall be based on IGBT technology with the following characteristics:

- Maximum locking voltage: ..... 1700 V
- Maximum current of collector: ..... 800 A
- Manufacturers: Eupec, Mitsubishi

6.4.6. Traction Control Electronics

The traction system has an adequate processing unit which shall permit the following interfaces with the train:

- Series RS-485 interface with the train control and monitoring equipment.
- Wiring interface with the friction brake and with other train equipment.

The traction control electronics are fitted in the traction inverter (inside the same box).

Use or disclosure of the proposal data is subject to the restrictions noted on the title page of this proposal
USB00000086_0049

The main functions of the electronics are as follows:

- Traction equipment control
- Communication with the other inverter
- Control of the power modules
- Data storage for diagnosis
- Pre-charge Control
- Wheel Slide Protection control
- …

6.5. TRACTION MOTOR

6.5.1. General characteristics

Three phase motors are used with a self-ventilation and closed design. They are squirrel cage type motors. They are rigidly connected on the side opposite to the drive. Each motor couple–gear-unit makes up a drive unit. Two traction units with gear units are mounted on a motor bogie with resilient mounts.

Self ventilated and closed motors have been chosen for their greater reliability. The cooling system for each motor consists of an internal and an external air circuit. Each air circuit is operated by its own fan. The two air circuits are strictly separated. The interior circuit cools the winding covers and the stator winding. The exterior fan provides cold air, taken from the air inlet, via the holes in the stator's iron core. The air inlet is fitted with a grill. Traction motor maintenance is limited to greasing of the bearings, cleaning of residual grease at regular intervals, and periodic cleaning of the air conducts and filtering systems.

The static and dynamic balancing of the high precision rotor reduces the vibrations to a bare minimum. The traction motor is protected from dust and water splash. The materials used and the protection paint ensure resistance to environmental influences such as a salty and corrosive environment.

For thermal protection the motors are equipped with PT100 temperature sensors. Following evaluation of the PT100 signals in each motor the temperature information is read by the Traction Control Unit for later processing and the actual thermal protection of the motors.

Tested speed sensors are fitted in each motor which measure the speed of the motor on a toothed wheel, fitted in the fan, in a position that can be easily accessed. By means of a special evaluation method (ratiometric counting) the low speeds can also be processed at an optimum level in the Traction Control Units.

Use or disclosure of the proposal data is subject to the restrictions noted on the title page of this proposal
USB00000086_0050

6.5.2. Technical Information

- Nominal power .....61 kW (132 kW per double motor)
- Rated voltage ..... 453 V
- Rated current ..... approx. 103 A (per single motor)
- Nominal speed .....1541 rpm
- Maximum Speed .....4000 rpm
- Rated frequency ..... 52 Hz
- Nominal torque .....~ 378 Nm (per single motor)
- Number of poles .....4 (2 pairs)
- Efficiency .....89 %
- Cos phi 0,84
- Type of protection: IP54
- Weight: .....~ 610 kg per double motor
- Lubrication:.....lubrication with grease
- Insulation grade..... H
- Winding type ..... Round wire winding
- Speed sensor ..... built in sensor toothed wheel
- Replacement of bearings: ..... 1 million km or a maximum of 8 years
- Bearing lubrication interval:.....150,000 km

6.6. BRAKE RESISTORS

The train unit shall be fitted with three banks of brake resistors connected to each of the traction inverters.

Each bank has two independent resistors connected to each of the brake chopper circuits of the traction inverter. The resistors are electrically independent.

The braking resistors are designed to dissipate all the electrical power generated by the motors when the catenary receptivity is zero. They are cooled via natural convection.

Use or disclosure of the proposal data is subject to the restrictions noted on the title page of this proposal
USB00000086_0051

The assembly shall be protected by a shroud to mechanically protect the resistors and perform the functions of a screen protecting against electromagnetic radiation and heat.

6.6.1. Insulation

The resistors have two insulation stages.

- Resistors/Bank insulation
- Bank/Train structure insulation

The voltage generated by the inverter during braking shall not exceed 1000 V.

6.6.2. Power and operating rate

The continuous rate power is approximately 2*52 kW.

6.6.3. Temperature

The traction equipment shall calculate the temperature of the resistors, measuring the ohm resistance. Therefore, there is no need to install temperature sensors or thermostats in the resistor itself.

Use or disclosure of the proposal data is subject to the restrictions noted on the title page of this proposal
USB00000086_0052

7. SALOON HEATING AND VENTILATION SYSTEM

The climatic comfort is achieved using energy efficient equipment so that the thermal isolation characteristics between the tram exterior and interior are achieved.

The heating and ventilation system ensures that sufficient fresh air is fed into the tram, in addition to the recirculation of air and the following sections of this specification will apply.

It is possible for the driver to de-activate the heating and ventilation system.

A comfortable tram climate for passengers is achieved using heating and ventilation equipment with automatic control systems.

Proposed Heating and ventilation system general characteristics:

The proposed HV system has the following essential characteristics:

- Secure and Reliable performance
- Service proven components
- Minimum weight commensurate with robust construction
- High efficiency
- Microprocessor based controls
- Efficient thermal and acoustic insulation
- …

The offered HV system it is based on a range of similar systems that CAF has supplied to the railway industry over a number of years.

The HV system to be installed per LRV is composed of the following main components:

- 3 HV unit (mounted on the roof of the intermediate modules (Modules B, D,G; see drawing Q.00.072.12 A
- 1 Electronic Control Rack

The unit frame is manufactured in non painted stainless steel.

The Tramway internal thermal comfort is controlled by a microprocessor based temperature controller installed on a common control rack mounted inside the tramway that controls the 3 HV units.

Use or disclosure of the proposal data is subject to the restrictions noted on the title page of this proposal
USB00000086_0053

Apart of the thermostatic control functions (in conjunction with the temperature sensors), the microprocessor controller also provides control intelligence and timing functions.

Thermal design data used for the proposed Heating and Ventilation System calculation:

- Average Transmission factor — 3 W/m^2
- Solar transmission factor — 60 %
- Solar Radiation — 600 W/m^2
- Lighting / electric load — 3 kW / Tram
- Supply air fan motor load — 2.5 kW / Tram
- Surface temperature due to solar radiation:
  - Roof — Te + 25ºC
  - Side Walls — Te + 16ºC

Where: Te = Ambient Temperature

7.1. VENTILATION

The equipment design has been based on the design parameters summarized in the tables below:

Dry Bulb Temp. Exterior ºC	Relative Humidity % RH Exterior	Passenger Load
28	45	347

Figure 8. Ventilation Design Data

The fresh air airflow will be 30m^3/h per passenger. Total 10410m^3/h per Tramway.

The ventilation calculation (figure 15) shows a maximum internal temperature of 37.7 ºC with full occupancy at 28ºC of ambient temperature. See graphic below with internal temperature evolution depending on occupancy and ambient temperature.

Use or disclosure of the proposal data is subject to the restrictions noted on the title page of this proposal
USB00000086_0054

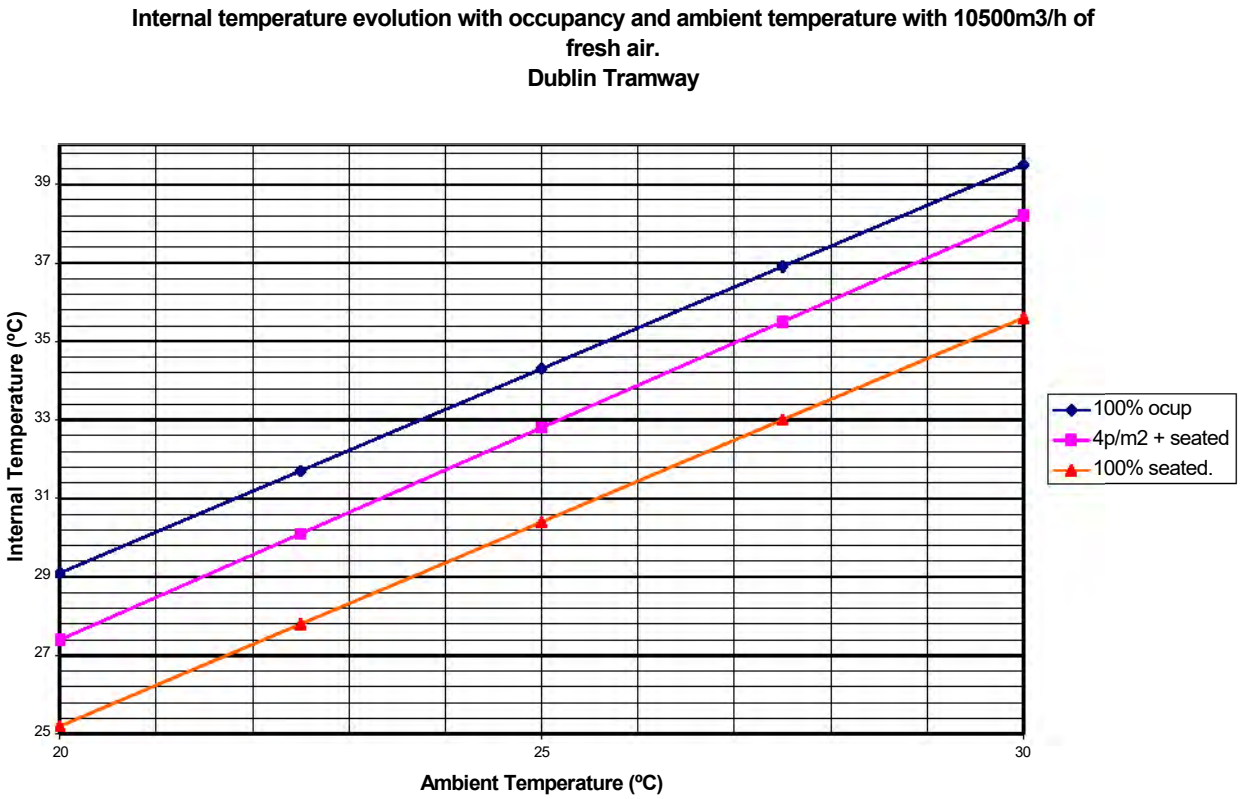

Figure 9. Internal temperature evolution depending on occupancy and ambient temperature

The air is distributed via a longitudinal duct arranged beneath the roofing structure and with outlets on both sides of the central aisle via longitudinal diffusers. The passengers are not subjected to draughts exceeding 0.5 m/s (at a height above floor level of 1.7 m). The air velocity in the ducts is low enough in order to avoid drumming and aerodynamic noise. Adequate thermal and noise insulation is provided.

The necessary air filters are installed in the fresh air and recirculation air inlet. They are easily accessible and dimensioned for ease of maintenance. Commercially available, washable or disposable types are provided.

Furthermore the ventilation achieved by the HV equipment, natural ventilation is achieved by inward opening upper sections of the passenger windows. The design of the inward-opening upper section have a maximum 30º opening angle, prevent excessive draughts and prevent passengers placing heads or limbs outside the body profile.

Use or disclosure of the proposal data is subject to the restrictions noted on the title page of this proposal
USB00000086_0055

DESIGN PARAMETERS

AMBIENT CONDITIONS SUMMER

	T_{DB} [°C]	R.H. [%]	S.H. [g/kg]	Solar radiation [W/m²]
Outside	28,0	45	10,59	600
Inside	37,7	26	12,65	
Vestibule	26,0			

VENTILATION

Number of persons		347
Air flow / person	[m³/h]	30,00
Total air flow	[m³/h]	10410

COIL DESIGN

Bypass factor	[%]	15

COOLING ESTIMATES

SOLAR HEAT GAIN

	Area [m²]	Factor [%]	k [W/m²/K]	ΔTsurface [K]	Intensity [W/m²]	Sensible heat [W]	Latent heat [W]
Side wall windows	27,04	50			600	8112	
Side wall (no windows)	58,76		3,00	16,0		2820	
End wall windows							
End wall (no windows)	5,28		3,00	16,0		253	
Roof	93,60	80	3,00	25,0		5616	
						16802	**0**

TRANSMISSION GAIN

	Area [m²]	k [W/m²/K]	ΔT [K]	Sensible heat [W]	Latent heat [W]
Side wall comfort area	171,60	3,00	-9,7	-5011	
Side wall vestibule					
End wall 1	5,28	3,00	-11,7	-186	
End wall 2	5,28	3,00	-11,7	-186	
Roof comfort area	93,60	3,00	-9,7	-2734	
Roof vestibule					
Floor comfort area	93,60	3,00	-9,7	-2734	
Floor vestibule					
				-10850	**0**

INTERNAL GAIN

	Quantity	Efficiency [%]	S.H./unit [W]	L.H./unit [W]	Sensible heat [W]	Latent heat [W]
Lights / internal heat sources		100	3000,00	0,00	3000	0
Evaporator fan motor(s)		100	2500,00	0,00	2500	0
Heat emission persons	347	100	64,80	50,72	22486	17600
					27986	**17600**

INFILTRATION GAIN

	Air flow [m³/h]	ΔT [K]	ΔS.H. [g/kg]	BF [%]	Sensible heat [W]	Latent heat [W]
Infiltrations	0	-9,7	-2,06		0	0
Fresh air	10410	-9,7	-2,06	15	-5091	-2641
					-5091	**-2641**

VENTILATION GAIN

	Air flow [m³/h]	ΔT [K]	ΔS.H. [g/kg]	1- BF [%]	Sensible heat [W]	Latent heat [W]
Fresh air	10410	-9,7	-2,06	85	-28846	-14963
					-28846	**-14963**

RESULTS

OVERVIEW HEAT GAINS

	Sensible [W]	Latent [W]	Total [W]
Solar heat	16802	0	16802
Transmission	-10850	0	-10850
Internal	27986	17600	45585
Ventilation+infiltration	-33937	-17603	-51540
Total	0	-4	**-3**

AIRFLOWS

Fresh air	[m³/h]	10410
Return air	[m³/h]	---
Treated air	[m³/h]	---

TEMPERATURES

Mixed air	[°C]	---
ADP	[°C]	---

Figure 10. Ventilation Calculation

Use or disclosure of the proposal data is subject to the restrictions noted on the title page of this proposal
USB00000086_0056

7.2. HEATING

The equipment design has been based on the design parameters summarized in the tables below:

Dry Bulb Temp. Exterior ºC	Dry Bulb Temp. Inside ºC	Passenger Load
-5	18	0

Figure 11. Heating Design Data

The fresh air airflow will be 15m^3/h per passenger. Total 5205m^3/h per LRV.

The heating calculations (figure 17) show a maximum heating requirement of approximately 64.850 kW for the tramway.

Each HV unit have an air heating capacity of 22 kW to cover the fresh air and transmissions.

The foreseen heating capacity of 66kW, covers the tramway needs, ensuring the requested performance at design conditions.

The loss of one heating unit in the tram has not a negative effect on the heating performance as long as the exterior temperature does not fall below 5°C.

It is possible for qualified personnel to adjust the settings without needing to change equipment.

Use or disclosure of the proposal data is subject to the restrictions noted on the title page of this proposal
USB00000086_0057

DESIGN PARAMETERS

AMBIENT CONDITIONS WINTER

	T_{DB} [ºC]
Outside	-5,0
Inside	18,0
Vestibule	18,0

VENTILATION

Number of persons		347
Air flow / person	[m³/h]	15,00
Total air flow	[m³/h]	5205

HEATING ESTIMATES

TRANSMISSION LOSS

	Area [m²]	k [W/m²/K]	ΔT [K]	Sensible heat [W]
Side wall comfort area	171,60	3,00	-23,0	-11840
Side wall vestibule				
End wall 1	5,28	3,00	0,0	0
End wall 2	5,28	3,00	0,0	0
Roof comfort area	93,60	3,00	-23,0	-6458
Roof vestibule				
Floor comfort area	93,60	3,00	-23,0	-6458
Floor vestibule				
				-24757

INTERNAL GAIN

	Quantity	Efficiency [%]	S.H./unit [W]	Sensible heat [W]
Lights / internal heat sources		0	3000,00	0
Evaporator fan motor(s)		0	2500,00	0
Heat emission persons	347	0	101,50	0
				0

INFILTRATION LOSS

	Air flow [m³/h]	ΔT [K]	Sensible heat [W]
Infiltrations	0	-23,0	0
			0

VENTILATION LOSS

	Air flow [m³/h]	ΔT [K]	Sensible heat [W]
Fresh air	5205	-23	-40091
			-40091

RESULTS

OVERVIEW LOSSES

	Total heat [W]
Transmission	24757
Internal	0
Infiltrations	0
Ventilation	40091
Total	**64848**

Figure 12. Heating Calculation

7.3. PREHEATING CONDITIONS

The required power in order to preheat the passenger saloon from a temperature of 0ºC to 18ºC is of 70kW. The required time is aprox. 45min.

Use or disclosure of the proposal data is subject to the restrictions noted on the title page of this proposal
USB00000086_0058

7.4. ODOUR AND TOUCH

In order to exhaust unpleasant odours from the tram interior, a minimum level of ventilation is maintained at all times whether in heating or ventilation mode.

The interior layout is arranged to remove areas where liquid might otherwise settle and to eliminate areas where dirt, rubbish may otherwise accumulate.

The materials selected will not give off unpleasant odours. The interior surface finish is agreeable to touch. The interior layout is free from sharp edges, gaps and projections so as not to present hazards to passengers, staff, cabling, pipes etc.

Use or disclosure of the proposal data is subject to the restrictions noted on the title page of this proposal
USB00000086_0059

8. CENTRALISED CONTROL UNIT

A description of possible “Centralised Control Unit” equipment is shown in Annex 1.2.2.5.

8.1. SYSTEM FUNCTIONS

The most important functions of the diagnostics and control system are:

- Picking up discrete variables directly through the system physical inputs.
- Picking up discrete and analogue variables through the communications via serial line.
- Control of auxiliary equipment on the train by means of the execution of a PLC programme.
- Analysis of the failure conditions and display of these in real time. The analysis is performed by the PLC programme.
- Chronological record of events with environment variables to facilitate maintenance operations of the train systems.
- Serial communication support through train and car buses.
- Recorded events can be displayed and analysed in a computer external to the system.
- Configuration of functional parameters.
- Self-testing of operation.
- Presentation of the most important events, on a Panel.

8.2. SYSTEM ARCHITECTURE

The system shall consist of a Central Control unit (with PLC processing) to be installed in each cab car.

It shall also consist of a Cab Terminal to be installed on the driver cab desks, connected via communication buses to the Central Unit.

The system is completed with PC software which allows: the development and loading of the PLC programme and the downloading, analysis and visualisation of the data recorded on screen, as well as the possibility of printing off this data.

Use or disclosure of the proposal data is subject to the restrictions noted on the title page of this proposal
USB00000086_0060

9. DOORS

This chapter relates to the electrically driven sliding plug door mechanism (both single leaf and double leaf) which is open from the outside. The door leaf is flush with the exterior surface of the vehicle once completely closed. On opening, the leaves perform a combined lateral and longitudinal movement to slide along the side of the carbody to the fully open position.

Double Leaf Dimension:

- Opening width: .....1,550 mm
- Opening height:.....2,230 mm
- Horizontal clear width.....1,300 mm
- Vertical clear height.....approx. 2,030 mm

Single Leaf Dimension:

- Opening width: .....990 mm
- Opening height:.....2,230 mm
- Horizontal clear width.....800 mm
- Vertical clear height.....approx. 2,030 mm

Other characteristics:

- Opening/closing time: ..... 3 sec. (+0,5/-0)
- Temperature:.....-25°C - +70 °C
- Voltage range: ..... 16.8 ÷ 31.2 V
- Humidity: .....up to 95 %

Maximum and minimum clearances that will show green/no green to the conductor:

- Closed .....0-5 mm
- Open .....> 10 mm
- Adjustment .....5-10 mm
- * No of re-openings when an obstacle is detected 2

*(Value to be defined by tie.)

Use or disclosure of the proposal data is subject to the restrictions noted on the title page of this proposal
USB00000086_0061

The reference value is usually taken to be that the door reopens twice when an obstacle is detected, and if the obstacle remains in place, the door usually closes on the third attempt).

9.1. MECHANICAL ITEMS

9.1.1. Support Items

Support Bar:

The support bar is fixed to the vehicle structure via a support bracket for the whole of the door mechanism. The bar supports the weight of the leaves and eases the parallel positioning of the leaves with respect to the carbody on opening and closing.

Slide/Support Assembly:

The slide moves along the roller bearings along the support bar. It also transmits the efforts from the mechanism to the leaves and vice versa. It also provides parallelism between the support and the bar.

The support is attached to the slide via two ball bearings and rigidly bolted to the door leaf. Therefore it transmits all the weight and movement efforts of the leaf to the bar.

9.1.2. Plugging/Unplugging

The lateral movement of the leaves is the result of the guide rails shaping to create the appropriate lateral and longitudinal movement. The upper guide rail is fitted in the header mechanism. A roller located in the support runs along this rail.

The lower guide rail is fitted in the leaves. There is an arm with a roller attached to the structure of the vehicle which is attached to the guide rail to provide the required guidance.

These guide items only support lateral efforts, and not longitudinal or vertical efforts.

9.1.3. Drive Items (installed in the header)

The door movement is generated by an electric motor with a gear. The motor operates a spindle. The spindle nut is attached to the slides with a parallel linkage arrangement. Via the slide and the support the leaves move in an engaged manner.

9.1.4. Electromechanical Brake

The spindle is flanged to a free wheel / clutch unit. This unit remains engaged on closure and prevents opening. On opening, this unit is electromechanically released. A manual release system for the clutch / free wheel is provided in case of an emergency.

Use or disclosure of the proposal data is subject to the restrictions noted on the title page of this proposal
USB00000086_0062

9.1.5. Emergency Unlocking (from inside)

On the inside and in each of the doors, a handle is fitted to be able to release and open a door in the case of an emergency.

Turning this handle (50º) has the following effect:

A. An electric limit switch is activated giving a “door unlock” signal.

B. Via an unlock cable the electromechanical brake is released and the door can be opened manually when the car is at a standstill.

Once the handle has been turned it becomes locked. This lock can be reset by turning the square key, located under the handle, 90º clockwise. Once the lock has been reset, the door returns to normal operation.

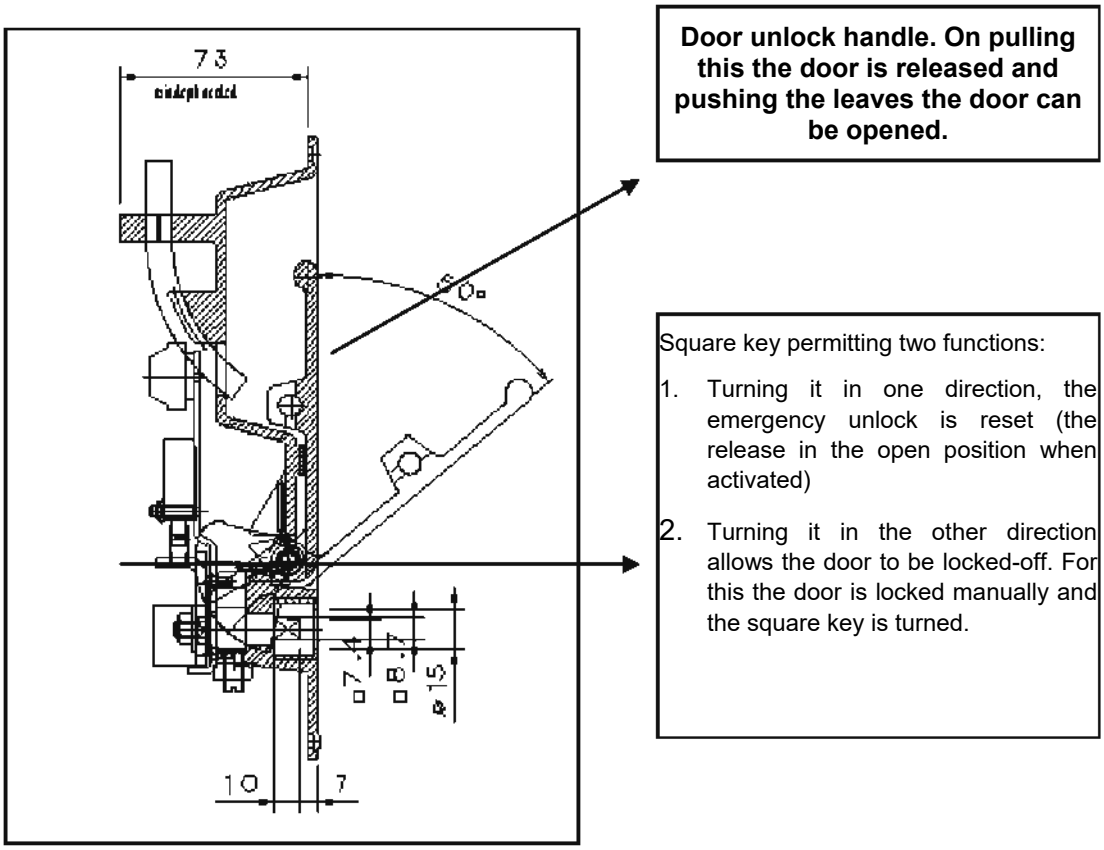

Figure 13. Interior lock/ unlock device

By means of this device, the driver (or authorised member of staff) can leave the unit via any of the doors of the tram as indicated below (It is understood that the train off case is analysed):

- Activate the door unlock device pulling the handle. The leaves shall now open slightly.

Use or disclosure of the proposal data is subject to the restrictions noted on the title page of this proposal
USB00000086_0063

- Reset the handle using the square key. On doing this the handle shall return to its original position. (If this action is not performed the door cannot be left closed from the outside as the door unlock system would still be actuated).
- Leave train, manually opening the leaves.
- Push the leaves by hand to close them with these now being locked.

9.1.6. Unlocking (From outside)

On the outside of each of the single leaf doors there is a device that can be operated by means of a square key which allows the driver or other authorised member of staff to access the unit via each of the passenger doors.

Turning this device (90º clockwise) leads to the following:

A. An electric limit switch is activated giving a “door unlock” signal.

B. Via the unlock cable the mechanical lock is released and the door can be opened manually when the car is at a standstill.

The emergency control can be reset by turning it to its original position. Once the emergency handle has been reset, the door returns to normal operation.

Use or disclosure of the proposal data is subject to the restrictions noted on the title page of this proposal
USB00000086_0064

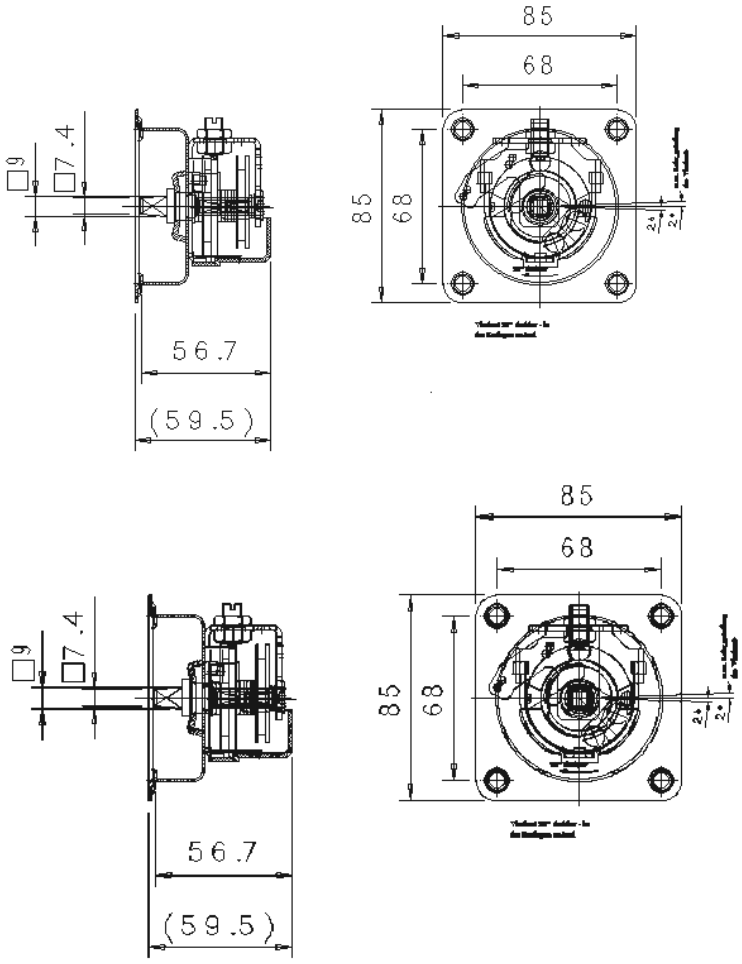

Figure 14. Exterior release device

By using the devices described above, the driver (or authorised member of staff) can access the unit, as indicated below (via the single leaf doors):

- Actuate the exterior unlock for any of the single leaf doors with the square key. At this moment the leaves will have separated slightly.
- Without removing the square key, reset the unlock by turning the key in the opposite direction so that the doors can then be closed. If the unlock is not reset this would remain actuated.
- Board the train, manually opening the leaves.
- Close the doors either manually or setting the train in operation.

Use or disclosure of the proposal data is subject to the restrictions noted on the title page of this proposal
USB00000086_0065

9.1.7. Lock-off Mechanism

A device is fitted inside the vehicle which allows for the door to be left out of service by means of a square key.

This device is located in the lower part of the unlock handle and allows for the door to be left out of service by turning the square key 90º clockwise, whereby the door cannot be opened electrically or manually (interior release) unless the door release is used from the outside.

9.2. DOOR LEAVES

They are produced as an aluminium sandwich construction. The frame is aluminium with a honeycombed core of the same material.

The leaf is edged with EPDM rubber sections, to provide adequate leaf water tightness. The front edge of the leaf has a special hollow EPDM rubber section to protect trapped obstacles. The rigidity or hardness of this section shall be such that an optimum compromise between the detection of obstacles with minimum dimensions and effort to remove a trapped obstacle in the shortest possible time)

These are built with 5 mm thick hardened glass.

They are equipped with an internal and external button with an indicator (4 green LEDs) which allows the passenger to open the doors once the enabled signal is activated.

9.3. ELECTRIC ITEMS

Mounted with the drive unit, the door control unit (DCU) controls the opening and closing of the doors.

9.3.1. Photocell

There is a photocell consisting of a transmitter and a receiver near to the door to prevent the door from closing when there is an obstacle in the door area.

9.3.2. Obstacle Detection

The side edges where the doors close are all sensitive to the presence of objects via a motor overcurrent detector and also via control of the position of the motor by means of an encoder. This system has a self-learning capability and considers changes in operating conditions.

This system detects obstacles of 25 mm in diameter.

10. AUXILIARY POWER SUPPLY SYSTEMS

A description of this equipment is included in Annex 1.2.2.7.

Use or disclosure of the proposal data is subject to the restrictions noted on the title page of this proposal
USB00000086_0066

10.1. STATIC CONVERTERS

Each unit is equipped with two static sets prepared to be supplied at 750 VDC and a battery charger.

As required in the Employer´s Requirement, they will be prepared to start when fed from the overhead line, irrespective of the state of charge of the battery (Flat Battery Start).

The auxiliary converters operate with supply voltage fluctuations of +20% and –36% (500-900 V). In the range of 570-900 V the output voltage and frequency are constant (with the tolerances defined later) and the output power is the maximum in all the range.

In the 500-570 range the output voltage and frequency are also constant but proportionally lower to maintain the torque in the loads (e.g. air conditioning compressors).

The high voltage circuit and the items used are of the latest generation (IGBT) already used and proven in various operations.

The purpose of the converter set is to generate and regulate the alternating current required to supply the alternating voltage circuits of the cars and the air conditioning units or other units that require it. The auxiliary converter is completely static.

The units supplied from 3x400 Vac are the following:

- Passenger saloon HVAC.
- Cab HVAC.
- Traction inverters ventilation.
- Battery charger
- Heated windshield

The converter circuits are connected in parallel so if any of them fail the other is automatically capable of supplying the whole unit except for the equipment mentioned above. During normal operation each converter supplies independent circuits.

The auxiliary converters can also operate with an output voltage of 60 Hz and 460 V. This allows the air conditioning compressors to be supplied at this frequency and voltage increasing its power. This possibility allows us to operate one of the converters (the one which supplies the air conditioning) at 60 Hz when more power is required by the air conditioning. The other converter continues to supply the other loads at 50 Hz. Should one converter fail then the other one still running operates at 50 Hz, supplying the loads described above.

Use or disclosure of the proposal data is subject to the restrictions noted on the title page of this proposal
USB00000086_0067

The output voltage characteristics are as follows:

- Voltage: ..... 400Vac ±5% For V_{HV} > 570Vdc
- Frequency: ..... 50Hz ±1% for V_{HV} > 570Vdc
- Number of phases: ..... 3 (without neutral)
- Harmonic distortion: ..... ≤ 10%
- Nominal power: 30kVA
- Protected from short circuit: ..... Yes
- Dielectric strength of this output with respect to
- earth and other circuits: ..... 2,5kV, 50/60Hz, 1 min

Note: For HV < 570Vdc the voltage and frequency of output is reduced to 360Vac and 45Hz in order to maintain the torque in the compressor motors.

The auxiliary converters are equipped with an input filter which prevents the injection of harmonics in the catenary that could cause interferences with the signalling and communication systems.

To measure or read the converter output voltage sensors and transducers of the unit can be used and the reading can be made via a laptop PC using diagnosis software. Should direct readings be required these can be taken in terminals inside the train.

The converter is hermetically closed and is designed to operate in an extreme environment due to humidity, dust, etc., and for this reason it is designed with an IP-66 level of protection according to CEI 60529 for the electronic part. The magnetic items are located in a compartment with forced ventilation, with an IP 24 level of protection, according to standard IEC 60529. These items are prepared to operate with water and dust.

The auxiliary converter is cooled via forced convection but avoiding any contact between the electronic part and the exterior air.

The main objective has been to reduce the volume and weight of the converter so as to be able to install two converters. For this to be possible, the isolation transformer has been removed and hence loads have had to be designed to support the catenary voltage. The loads which cannot support this voltage are galvanically isolated by means of a transformer.

Use or disclosure of the proposal data is subject to the restrictions noted on the title page of this proposal
USB00000086_0068

The converter can support sudden voltage transients due to pantograph disconnection, overhead line sectionings, etc., and are equipped with all the necessary protection to prevent interferences and shall have at least the following protections:

- Protection against internal short circuits.
- Line over-voltage and minimum voltage.
- Overloads.
- Excessive Temperature.
- Excessive reduction or increase of the battery charge.
- Start up with progressive evolution of parameters, following running through sections.

They only have galvanic isolation for loads that so require, and to this end the insulation is obtained via the battery charger transformer. Therefore the auxiliary converter alternate output is not isolated and can supply loads such as traction fans, air conditioning, battery charger, etc.

The battery charger transformer has a double secondary to permit the generation of battery voltage and an isolated 200 V alternating voltage. This isolated voltage is used for loads such as sockets where galvanic isolation is required.

The energy performance of the static converter exceeds 90% for loading rates greater than 50% and any supply voltage.

The voltage available in the battery terminals is used by the static converter as an auxiliary source of energy for control and regulation. This voltage can fluctuate between +25/-30% without this voltage variation affecting start up or operation of the static converter.

Below is the block schematic of the converter set circuits, showing the proposed filters to eliminate the harmonics that could occur.

Use or disclosure of the proposal data is subject to the restrictions noted on the title page of this proposal
USB00000086_0069

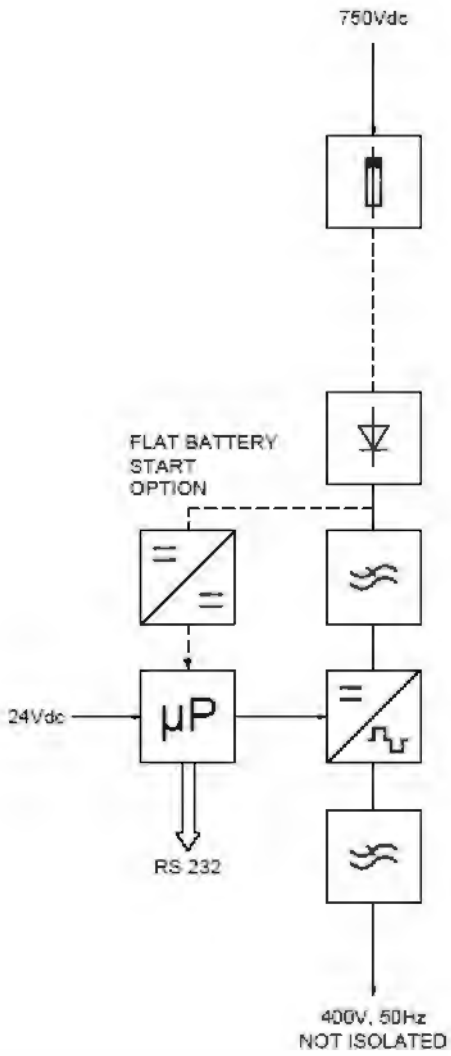

Figure 15. Block schematic of the static converter

The maximum time considered for the loss of contact between the catenary and pantograph without a lack of voltage being detected at the converter output is 9 ms.

10.2. BATTERY CHARGER

The purpose of this unit is to supply LV energy for the auxiliary services of the unit taking the energy from the 400Vca three phase line from the converters.

The unit supplies the direct current loads and the battery charge. The main loads supplied from 24 V are as follows:

- Control of units (traction, brake, HV, converter, etc...).
- Battery.
- Interior lighting.

Use or disclosure of the proposal data is subject to the restrictions noted on the title page of this proposal
USB00000086_0070

- Door operation.
- Body-end lights.
- Hydraulic pumps.
- Communications.
- Recorder.
- Radio.
- Various items of safety equipment.

The output voltage characteristics are as follows:

➢ Alternating current output

- Flotation voltage: 28.9Vdc
- Voltage stability: .....± 1%
- Voltage adjustment:.....± 5%
- Ripple voltage:..... <1 % rms
- Maximum current limitation:..... 208A
- Battery current limitation:..... 110A
- Permanent power .....8,5 kW
- Protected from short circuit:.....Yes
- Dielectric strength of the output with respect to earth and the other circuits: ..... 0.5kV, 50/60 Hz, 1 min

The outputs are galvanically isolated from the input line and the energy performance of the battery charger is from 80% to 100% of charge.

10.3. BATTERY

Each unit is equipped with a nickel-cadmium type battery capable of supplying the necessary circuits of the vehicle. The nominal capacity of the battery shall be 180 Ah and consists of 19 nickel-cadmium cells connected in series and grouped in blocks of 4 and 5 cells.

The vehicle's nominal voltage shall be 24 V which is normal for these types of vehicles. The range of voltages shall be 24 V-30%, +25% (16.8 V-30V) in accordance with standard EN 50155.

Use or disclosure of the proposal data is subject to the restrictions noted on the title page of this proposal
USB00000086_0071

Both the charge current and voltage are controlled so that:

1. The battery charge is optimal

2. Water consumption is reduced to a bare minimum and hence so is maintenance.

For this to be possible, a control is performed on the charge current and voltage.

- **Charge current**: The battery charger is equipped with a double positive output (an output for the charging and another for the battery) so that the battery charger can control which current is for charging the battery and which is used to supply the loads. This permits the charger to control the charge voltage so that the current supplied to the battery does not exceed 0.4 C (72 A in this case), which is the value proposed by the battery manufacturers so that the water consumption is not unnecessarily increased.

- **Charge Voltage**: The battery charge voltage is adapted to the battery temperature. For this to be possible, a temperature sensor is installed in the battery and the battery charger performs the reading. The temperature compensation is performed for two reasons:

    1. When the temperature is low, the battery cannot be charged unless the charge voltage is increased. The charge voltage is increased in proportion to the temperature allowing the battery to be charged at optimal levels, even at temperatures of –15ºC.

    2. For high temperatures, the charge performance is reduced and the battery cannot be charged in an optimum manner and the water consumption increases greatly. To reduce water consumption the charge voltage is reduced. This compensation for the voltage does not increase the battery charge but reduces water consumption.

The charge voltage is approximately 1.46-1.47 V/cell at 20ºC. The voltage compensation according to the temperature is 2-3 mV/ºC cell.

As well as these functions to reduce the battery filling frequency, the battery also has a centralised filling system which permits all of the cells to be filled from one single point.

The battery is connected in “parallel” and protected by a thermal magnetic switch which shall isolate it from the vehicle circuit when the current exceeds a specific value, to be established during the project. In principle the nominal current of the thermal magnetic switch is 250 A but can be adjusted within an ample range.

The connection between the battery and the vehicle circuit is also made via a contactor which permits the connection and disconnection of the battery under normal conditions.

Use or disclosure of the proposal data is subject to the restrictions noted on the title page of this proposal
USB00000086_0072

The battery can be charged from the exterior by connecting the 400 V three phase supply to the socket fitted for this purpose.

The battery is mounted on the unit roof in a steel housing designed for installation. This housing was designed in order to be able to evacuate the gases generated by the battery.

The battery charger has a minimum voltage device function which, depending on the battery voltage and current, determines when the battery has reached the established discharge level. When this level has been reached the charger opens the battery contactor, guaranteeing a sufficient minimum charge level to set the train unit into operation. The discharge level shall be regulated during the commissioning of the unit. This device can be cancelled for the setting into operation of the unit.

The battery meets the specific standard for nickel-cadmium IEC 60623 batteries and UIC 854 R batteries.

Use or disclosure of the proposal data is subject to the restrictions noted on the title page of this proposal
USB00000086_0073

11. BRAKE

The proposed tram is fitted with the following brakes.

The motor bogie braking system consists of 3 types of brakes:

- regenerative electrodynamic brake,
- hydraulic controlled friction brake,
- electromagnetic track brake.

The trailer bogie braking system consists of 2 types of brakes:

- hydraulic controlled friction brake,
- electromagnetic track brake.

Friction braking is achieved via 1 actuator per wheel on the motor bogies and 2 actuators per axle on the trailer bogies. The electrodynamic brake (ED) is the priority brake for service brake.

The replacement speed where the friction brake replaces the electric brake is approximately 7 km/h.

11.1. VEHICLE PERFORMANCE DURING BRAKING

Unless otherwise specified, the terms and the performances are verified according to the conditions indicated in standards EN-13452-1:2003.

11.1.1. Service Braking

The term service brake relates to all types of normal braking realised by the driver from the controller without reaching full service braking.

The braking demand shall be realised from the cab controller when this is within the braking zone. The braking effort shall be proportional to the position of the controller from the coasting position to that of full braking. Braking shall only occur when the controller is in the braking zone and therefore this braking can be cancelled returning the controller to the coasting position.

The wheel-slide protection shall operate to prevent sliding and in this way make the most of available adherence.

During the service braking a blending of electrodynamic and friction braking is given.

Use or disclosure of the proposal data is subject to the restrictions noted on the title page of this proposal
USB00000086_0074

The train will maximize the use of regenerative braking and then rheostatic braking before using friction braking. That is to say, the main brake during service braking will be the regenerative/rheostatic one (electrodynamic brake), while the friction brake will complement it, or even replace it in case that a failure would appear in the electrodynamic brake.

This blending will be given until the replacement speed of approximately 7km/h, where the friction brake fully replaces the electric brake. No blending will be then given below this speed value.

The maximum instant service deceleration will be 2 m/s2.

The minimal equivalent deceleration between any speed lower than or equal to 70 km/h and standstill will vary between 0 and 1.2 m/s2.

In service braking, the equivalent time will not exceed 1.5 seconds.

11.1.2. Emergency Deceleration

The maximum admissible instantaneous deceleration will be:

- 2.5 m/s2 in emergency braking 1 and 2
- 5 m/s2 in emergency braking 3
- 4 m/s2 in emergency braking 4

For emergency brake 3 and 4, the equivalent deceleration will be no less than 2.8 m/s2. The equivalent time shall not exceed 0.85 seconds.

For emergency brake 1 and 2, the equivalent deceleration will be no less than 1.2 m/s2.

The equivalent time will not exceed 1.5 seconds and 2 seconds respectively for emergency brakes 1 and 2.

11.1.3. Security Deceleration

The maximum instant safety deceleration will 4 m/s2.

For the security brake, the equivalent deceleration will be no less than 1 m/s2. The equivalent time will not exceed 2 seconds.

11.2. JERK

In normal operation, i.e. in all starting conditions, on application and end of service brake, the jerk will be less than 1.5 m/s³.

Use or disclosure of the proposal data is subject to the restrictions noted on the title page of this proposal
USB00000086_0075

In emergency braking 3 and 4, the jerk will reach a maximum value of 8 m/s³. In safety braking, as well as emergency braking 1 and 2, the jerk will not exceed a value of 4 m/s³.

11.3. STATIC PERFORMANCES

11.3.1. Holding Brake

When a mechanical braking unit fails, the line immobilisation brake will retain the vehicle in AW4 (6 pers/m²) at a standstill for 1 hour on the steepest gradient (7.5%).

11.3.2. Parking brake

With a braking unit participating with the failing parking brake, the unloaded vehicle will be maintained for an unlimited time on a gradient 4%.

11.3.3. Performance in towing/pushing mode

The unloaded vehicle towing another unloaded, completely inoperative vehicle, will be able to start and negotiate the maximum gradient of the line with a minimum acceleration of 0.1 m/s².

11.4. IMPLEMENTATION

The combination of different brake systems for each of the braking modes will be in accordance with section 6.4 of standard EN-13452-1:2003.

11.5. ELECTROHYDRAULIC BRAKE SYSTEM

11.5.1. System Description

The proposed braking system operates with an inverse type activation (with spring load) on all bogies.

When no pressure is supplied, the stable condition of the floating inverse actuator causes the application of a maximum braking effort.

In the motor bogie the TCU (traction control unit) controls the friction brakes according to the brake demands and also controls the wheel slide protection. The friction is controlled by the TCU via the autonomous HVI card. The TCU substitutes the regenerative electrodynamic brake with the friction brake. The TCU also has the function of ensuring that the brake is applied or released, the appropriate pressure in the callipers is consistent (control of the pressure switch signal and diagnostic). Only the full service brake is under the direct control of the vehicle via fixed wiring.

Use or disclosure of the proposal data is subject to the restrictions noted on the title page of this proposal
USB00000086_0076

In the trailer bogie, the BCU (Complete SW Electronics) controls the friction brakes (hydraulic brakes) in accordance with the brake demands and the vehicle's condition and load. If necessary, the trailer bogie friction brake can substitute part of the regenerative electrodynamic brake at low speed (below the substitution speed). The BCU controls wheel slide and the brake diagnostics. Only the emergency brake is under the direct control of the vehicle via fixed wiring.

The regenerative brake (electrodynamic brake) has the maximum priority in service braking.

The brake control unit (BCU) has an interface with the vehicle's logic and the traction control to achieve vehicle integrated and synchronised operation. The safety braking signals neutralise the BCU to increase the brake system safety.

The actuators receive the oil from hydraulic power units (HPU).

The HPUs provide the power and control of the electric hydraulic brake. Its purpose is to control brake applications and releases.

The hydraulic energy to release the brakes comes from a hydraulic accumulator which is charged by the unit's pump via the charge integrated circuit using an electronic pressure switch.

The hydraulic energy to release the brakes is stored in a service accumulator which is charged by the HPU pump.

Use or disclosure of the proposal data is subject to the restrictions noted on the title page of this proposal
USB00000086_0077

12. INFORMATION AND COMMUNICATION SYSTEM

A description of possible "Information and Communication System" equipment is shown in Annex 1.2.2.4.

12.1. PASSENGER INFORMATION SYSTEMS

All visual and audible information, which is specific or exceptional in character, are preceded by visual or audible warning signals.

12.1.1. Passenger Destination Information System

The Passenger Destination Information System operates based on line data, location of the train along the route and door opening/closing signals, which are provided by other systems in the train.

The Announcement system contains the stations table and their location along the route for each of the lines along which the train is to circulate. These tables include the kilometre points at which the next stop announcements are to be made.

The system has the following features:

- 2 front passenger information displays (PID) which are located in the front upper part of each driver's cab. These displays have characters heights of 165 mm and will display up to 12 characters in one line. Its resolution is 12x169 LED diodes. This signs are fitted with yellow LED diodes on a black background and have an RS485 interface with the communication control units installed in its cars.

- 4 side external PID on both sides of the tram (two per side). They will be located at each end of the tram and will be integrated into the same control scheme. They will have same dimensions and characteristics as the internal displays.

- 8 internal PIDs; which will be easily read by all seated and standing passengers. Please see drawing Q.00.072.32 in order to see the position of the PID. This LED panels will have a resolution of 8x96 LEDs diodes instead of the usual 7x96. This is a measure taken in order to avoid raising characters such as "q" of "g" and thus, improve the readability of the signs.

- 20 internal loud speakers, 2 cab loud speakers and 2 noise sensors will be installed to provide audible information by means of pre-recorded announcements. The system automatically controls the sound level of the passenger announcements depending on speed (three discrete levels), on occupation (two discrete levels; this occupation will be deduced from the weight of the car, which will be supplied by another system in the train) and on ambient noise (one discrete level). The audible information is integrated with the visual displays.

Use or disclosure of the proposal data is subject to the restrictions noted on the title page of this proposal
USB00000086_0078

- 8 passenger intercoms are available (one at each vestibule and one at each wheelchair area) to enable every passenger in an AW5 loaded LRV, to communicate verbally with the driver to inform him/her of an incident or an emergency. Check drawing Q.00.072.32 to see the layout of these devices.

All displays will comply with the RVAR in matter of layout and dimensions.

The Communication Control Unit CCU controls the information to be displayed in the internal signs, in the front signs and in the external side signs. For the information to be shown in the internal signs, in the front signs and in the external side signs the Communication System will use the information provided by the driver through the Cab Terminal, which will belong to the Train Control & Monitoring System. During the trip, the signs will use the information provided by the station announcement system DVAS, which is connected with the SCCS. The system will allow the definition of the routes along which the train is to circulate and the loading of its configuration and messages into the DVAS station announcement system.

Location is reserved in the tram interior for route maps and other information.

Together with the interior Passenger Information Displays, 8“Stop Request” lamps will be provided. They will be lit every time a “Stop Request” button is pressed.

12.1.2. General Passenger Information System

This is linked into the interior Destination Information System using the same PIDs. The broadcast of this general information is normally at the discretion of the driver and will comprise:

- visual information which can be read easily by both seated and standing passengers. Temporary messages, which can be programmed in advance, will be clearly identifiable.

- audible information, using the same loudspeakers as the voice system for pre-recorded temporary announcements. The number and frequency of these messages will be left to the discretion of the person responsible for operations.

12.1.3. Passenger Safety Information System

This comprises:

- visual information, notices etc. indicating the location of the passenger emergency communication devices, door open buttons, etc.

- audible information transmitted via the public address system by the driver and/or the CCR personnel. The messages broadcast in this manner take priority over pre-recorded messages, with messages broadcast by the CCR taking priority over driver messages. The use of pre-recorded audible and visual messages will be considered for various possible events including emergency scenarios.

Use or disclosure of the proposal data is subject to the restrictions noted on the title page of this proposal
USB00000086_0079

- tactile information on the doors to assist visually impaired passengers in manually locating the door open buttons from the inside and from the outside of the LRV.

- The use of pictogram based information signs detailing the different emergency equipment onboard the LRV and their methods of operation will be considered in order to reduce the requirements for signage where possible.

- Signage for the emergency services will be provided where necessary.

12.2. MEDIA AND COMMUNICATIONS CONTROLLER

This system will consist on the following devices installed in each LRV:

- Media & Communication Controller, MCC.

- Eight (8) Monitor Remote Unit, MRU.

- One (1) Access Point, AP.

- Eight (8) Video Screens, VS. Additional Video Screens may be installed in order to improve the information given to the passengers.

- Three (3) Power Supplies for each two Video Screens, PS VS.

The Media & Communications Controller of the Media & Communication System will be connected to the Communication Control Unit. This Media & Communications Controller MCC will transmit video to the 8 Video Screens with enough quality. Each Video Screen will receive the video from the Monitor Remote Unit, which will set up the video for its broadcasting. In addition, the MCC will be connected to a wireless Access Point by Ethernet connection.

The contents' update of the Media & Communications Controller will be done in the depot. For this function TIE will need to install one depot's access point and the PC where the software will be installed.

The software will allow uploading the video and audio information to be displayed in the train. Each train will have a contents list and a register of the operations that will be saved in a database contained in the PC.

Please see drawing Q.00.072.32 in order to see the position of the screens.

Use or disclosure of the proposal data is subject to the restrictions noted on the title page of this proposal
USB00000086_0080

13. PASSENGER COUNTING INFORMATION SYSTEM

A description of a possible “Passenger Counting system” is shown in Annex 1.2.2.3

Provision will be made on all trams for the future fitment of and Automatic Passenger Counting System (APC).

The equipment that CAF propose is modular and consists of a kit including the Counting Bar and the Data Management Board. This kit ensures the counting of passengers boarding and alighting the vehicle for a maximum of 32 doors. Using the most advanced technologies in electronics, data processing and signal treatment, the Proposed Counting Bar was developed specifically in order to continuously count, with directional differentiation, the passengers entering and leaving through a door.

Each door of the vehicle will be equipped with a counting bar (MCT) composed of:

a) from 1 to 5 mixed active/passive infrared sensors, depending on the width of the door and the presence (or not) of a separation pole between the doors all integrated in an anodised aluminium cover painted to easily match the door panel and surrounding. In our case, 3 sensors will be provided for the double leaf doors and a unique sensor for the simple leaf doors.

b) an electronic management board

c) 1 or 2 detectors that communicate the opening and closing of the doors because we are only counting when the doors are opened

d) a switch that enables the definition of the counting bar’s communication bus address for the data transmission.

The counting bar is installed in such a way that the counting zone is as near as possible to the door without being obstructed by the doors’ opening and closing.

The counting technology, is a combination of active and passive infrared sensors which are able to differentiate the people entering and leaving a place. The passive sensors are sensitive to the infrared rays given off by individuals and thus detect the direction of movement. The active sensors, through the emission/reception of an invisible infrared beam, differentiate between the person and the background.

The counting module (MIP) receives from the door detector two signals indicating the door’s status:

a) Door closed (enabling the system to detect when the door begins to open)

b) Door completely open (enabling the system to detect when the door begins to close)

The Data Management Board (UCD):

Use or disclosure of the proposal data is subject to the restrictions noted on the title page of this proposal
USB00000086_0081

a) memorises the counting bar's counting data from each door

b) communicates this data to the information system

c) enables counting system maintenance via a portable PC

d) transmits the electricity to the counting bars to which it is connected

Use or disclosure of the proposal data is subject to the restrictions noted on the title page of this proposal
USB00000086_0082

14. EVENT RECORDER SYSTEM

14.1. SYSTEM FUNCTIONS

The most important functions of the system are as follows:

- Recording of speed, distance, time and variables relating to the train running safety, with judicial objectives.
- Recording of important train operation variables.
- Creation of speed levels for use in other systems and speedometers control.

The System contains self-test subroutines, and redundancy in the vital parts, in order to achieve the required safety for application and contains an own event recorder which is recorded in the removable memory together with the circulation events.

With the signal from the tachogenerators and in accordance with the wheel diameter, the speed and distance covered are obtained. This speed and distance are recorded in real time, together with the other variables, in the following conditions:

- The resolution of the event recorder can be of 1.0m for the last day's operations and of 10.0m for the last seven day's operations, as the document "Employer's Requirements (Extract)" requires. Nevertheless, an error of less than 1% has always to be taken into account due to external factors such as, heavy brake manoeuvres or wheel diameter changes.
- The memory of the event recorder could be enlarged up to 32MB and according to our experience, this should be enough to retain the data for a 48 hour period.

Via a relay contact, which remains closed when the unit operates correctly, the unit's availability is communicated to the exterior.

The software installed in this system will enable to download the registered data in either tabular or graphical format.

The System is also equipped with a Dead Man according to UIC-641-2.

14.2. DEAD MAN DEVICE

The System includes a Dead Man Device in the Central Unit with a double affect, according to UIC-641-2.

It will be placed at the master controller as requested by TIE.

Use or disclosure of the proposal data is subject to the restrictions noted on the title page of this proposal
USB00000086_0083

The system has a redundant circuit with double reference circuit whereby an external signal can be given should a fault occur.

There is an input allowing for the device to be cancelled should a fault occur. This cancellation input and the fault output are sent to the recording equipment to be recorded.

Use or disclosure of the proposal data is subject to the restrictions noted on the title page of this proposal
USB00000086_0084

15. CCTV

The equipment for the installation of the CCTV system consists of cameras to capture images inside and outside the unit, a monitor in each driver cab and a central control module.

The exterior cameras are located on both sides of the control cabs having the same function as rear view mirrors and they will used to control access to the cars.

The items are arranged in each basic unit as follows:

- A and E cars 1 front camera + 2 exterior cameras + 1 interior camera + 2 monitor and 1 central module(one of them).

- B, D and G cars 2 interior cameras

The cameras will be protected by a hemispherical dome, as requested in the Employer´s Requirement.

Position of the interior cameras will be defined in the project phase.

So the total interior video surveillance equipment in colour for the 7 cars consists of the following items:

- 2 Front Cameras

- 4 Exterior Cameras

- 8 interior Cameras

- 1 Central Unit

- 4 TFT 10.4” monitors

The Central Unit (CU) is the central unit for video capturing, processing and recording, of all connected video cameras.

The CU has removable hard disk capacity for at least 72 hours of continuous recording from all cameras in normal mode. In the recorded images there is information about camera number, car number, time, date and other information available from the Central Unit.

The system receives digital alarms, from the Centralised Control Unit. When an alarm is activated, the system displays in full-screen mode the image from the camera near the emergency. Alarm events can change automatically the recording speed on fps. Alarm events can be: passenger emergency communication, door emergency, smoke detector, temperature sensor or manual selection by the driver. This information is received from the Central Unit

Use or disclosure of the proposal data is subject to the restrictions noted on the title page of this proposal
USB00000086_0085

When there is an alarm event the CCTV automatically activates the monitor in the active cab and displays the picture from the camera that best shows the position of the activated alarm.

The alarm video file is recorded on a permanent area of the hard disk, until it is erased by command.

The CU will perform a self test on each power on. The test result is reported to the Central Unit system. Failures detected during CU operation are automatically reported to the Central Unit system. An automatic reset of the CU is performed only if it is necessary to recover normal operation.

Use or disclosure of the proposal data is subject to the restrictions noted on the title page of this proposal
USB00000086_0086

APPENDIX 2: STRUCTURAL DAMAGE REPAIR

INDEX

1. DAMAGE ANALYSIS 2
1.1. CAUSE OF DAMAGE 2
1.2. TYPE OF DAMAGE 2
1.3. EXTENT OF THE DAMAGE 2
2. REPAIR METHODS 3
2.1. HAMMERING OUT DENTS 3
2.2. COLD STRAIGHTENING 3
2.3. HOT STRAIGHTENING 4
2.4. WELDING 4
2.5. REPLACEMENT OF DEFECTIVE PARTS 4
2.6. DESIGN IMPROVEMENTS 5
3. SHOP-FLOOR RECOMMENDATIONS 5
3.1. EXTENT OF DAMAGE 5
3.2. CHIPPING OUT DEFECTIVE WELDS 5
3.3. EDGE PREPARATION 5
3.4. CUTTING OUT DAMAGED PARTS 6
3.5. SELECTION OF WELDING TECHNIQUE 6
4. INSPECTION AND FINAL MEASUREMENTS 7

Use or disclosure of the proposal data is subject to the restrictions noted on the title page of this proposal
USB00000086_0087

In this chapter the main principles for the repairing of steel and stainless steel structures in case of damages are presented.

Only personal, qualified for welding, is allowed to do the repairing work. When starting the repairing work the manufacturing worksheet (including repairing procedures and drawings) shall be at personnel's disposal.

1. DAMAGE ANALYSIS

Before starting the repairing work it shall be clarified the cause, type and extent of the damage. This clarification can also affect the selection of the required repair method.

1.1. CAUSE OF DAMAGE

The damage can be caused by a collision or other accident or by structural defects of the body. The latter case can be fatigue or corrosion. In these cases it should be discussed with the manufacturer of the car body about the corrective actions.

1.2. TYPE OF DAMAGE

The types of damages can be divided according the following list:

- Dents
- Bent sheets and/or profiles
- Twisted sheets and/or profiles
- Holes in sheets and/or profiles
- Cracks in the parent material
- Cracks in the welded joints
- Broken sections, etc.

1.3. EXTENT OF THE DAMAGE

Since hairline cracks are not visible with the naked eye in the parent material or in the welded joint zone it shall be examined after, i.e.: collisions, all the critical points carefully. Liquid Penetrant Test is suitable for this.

Then it shall be determined in which kind of structures there are damages, i.e.: Repair of profiles or thick plate structures and thin exterior sheeting structures need different repair methods.

Use or disclosure of the proposal data is subject to the restrictions noted on the title page of this proposal
USB00000086_0088

2. REPAIR METHODS

After damage analysis it is possible to determine the most suitable methods for each case.

Before starting the repairing work interior panels, insulation material, windows, seats, floor and, if present, housing equipment and wiring shall be removed in the area of damage. The car must rest on a plane surface supported in front and behind the area, which must be replaced, and fixed to the ground.

2.1. HAMMERING OUT DENTS

Hammering out dents can only be considered in cases of relatively minor damages. In case of small dents cold stretching or dent removal by pressing or hammering should be used. For bigger dents it is possible to use a combination of heat treatment and hydraulic press (See also 2.3).

2.2. COLD STRAIGHTENING

The restrictions for dent removal also apply for straightening.

Repair through the cold straightening method results in a permanent deformation. The degree of force required is roughly equivalent to that which caused the damage. To achieve permanent deformation the generated stress must be above σy, without attaining σu. Otherwise a cracking hazard results. See table 2.2.1.

Normally cold straightening is an unsatisfactory method. Only useful for deformations less than 2 mm/m.

Product	Alloy	Thickness Th (mm)	Mechanical Properties	
			σy (N/mm^2)	σu (N/mm^2)
LAHT Steel Sheet & Plate	S355 J2WP	$Th \leq 6$	355	510
	S355J2G1W	$6 < Th \leq 20$	355	490
Plate	S355J2G3	$Th > 20$	345	490
Stainless Steel	AISI 304L	$Th < 5$	240	520

Table 2.2.1 Material Properties. (σy = Material yield strength, σu = Material ultimate strength)

Use or disclosure of the proposal data is subject to the restrictions noted on the title page of this proposal
USB00000086_0089

2.3. HOT STRAIGHTENING

Heat the deformed area with acetylene torch and apply force with a chain or rod in the desired direction. The amount of heat depends on the magnitude of deformation to be corrected but in no case should exceed the temperatures of table 2.3.1

Thickness (mm)	Temperature (ºC)
5	700
10	750
15	800
20	850

Table 2.3.1 Maximum Temperatures for Hot Straightening

2.4. WELDING

Welding can be used as a repair method in the following cases:

- Defective welds are chipped out and must be replaced
- A crack in construction material must be closed by a weld
- A defective construction part must be removed and a spare part welded in.

For repairing existing welds it is sufficient to observe the general instructions of steel and stainless steel welding (see also chapter 1.2.3). The residual stresses caused during welding must be taken into account throughout straightening.

Before starting the repairing of cracks of parent material by welding it must be carefully examined what have caused the cracks. If the crack was caused either by fatigue or by corrosion it must be examined together with the manufacturer of the body whether the crack could be repaired by welding of a design change is needed to avoid further problems.

When a part must be removed and new part welded in the high stresses in welding area can be minimised by placing cuts in less dangerous zones. Positioning of welds in critical areas must be agreed with the manufacturer.

Satisfactory weld quality only can be achieved by reliable preparation of the weld edges and by thorough cleaning of the welding zone immediately prior to welding. Whenever possible welds should be placed in areas which allow easy access for welder so that the body shell can be in normal position.

2.5. REPLACEMENT OF DEFECTIVE PARTS

Defective parts can be replaced by welding in new parts of the same type of material. If the structural part is damaged to the extent that it must be replaced it is often advantageous to remove the damaged section and weld in an identical spare

Use or disclosure of the proposal data is subject to the restrictions noted on the title page of this proposal
USB00000086_0090

part following suitable edge preparation. It is often possible to avoid the complicated removal and rebuild of a complete sub assembly.

In case of minor damage (e.g. in side walls) it is often possible to replace small side wall sections by welding in plate.

2.6. DESIGN IMPROVEMENTS

If fatigue or corrosion damage occurs due to faulty design it must be examined whether not only the damage but also its cause can be eliminated at reasonable cost to prevent future reappearance's.

Damage due to fatigue occurs in zones exposed to continual dynamic stress (e.g. shaking). Abrupt cross section transitions and edges (notch effect) of any kind considerably increase the danger of damage. If it is possible to eliminate these factors successful results can be obtained. Repair of such damages must be carried out in close co-operation with the car body manufacturer.

In cases of corrosion the new element should be of a similar alloy as the replaced one. Since contact corrosion normally occurs in zones where there is a suitable electrolyte (moisture). Suitable measures must be employed during repair to ensure that condensate build up or even water pockets cannot occur any more. This can be achieved by sealing of contact surfaces.

3. SHOP-FLOOR RECOMMENDATIONS

The requirements of occupational protection concerning welding work must be completely followed. It is important that welding operations should be made in a clean and wind free area, also a correct levelling of the body shell is important to avoid deformations caused by the weld.

3.1. EXTENT OF DAMAGE

If only part of parent metal cracks or cracked weld seams are repaired the repair is of practically no value since the non repaired part of crack will spread immediately. It is therefore advisable to spray the suspected crack zone with a test solution of a suitable penetrant test procedure. This provides reliable information on the spreading of even hair-line cracks which are invisible to the naked eye.

3.2. CHIPPING OUT DEFECTIVE WELDS

The weld must be thoroughly removed by chiselling, by grinding or by milling.

3.3. EDGE PREPARATION

The shape of welding edges follows the general shapes defined for steel structures.

Make sure that there are no burrs or other irregularities on the edges left from machining.

Use or disclosure of the proposal data is subject to the restrictions noted on the title page of this proposal
USB00000086_0091

The longitudinal edges should be debarred and chamfered. Bevels produced by plasma cut should be reduced by grinding.

The form and dimensions of the joints must be matched with one another based on the following parameters: welding technique used, welding position, accessibility and a minimum welding volume.

The majority of internal welding defects such as cracks, pores, inclusions and lack of penetration can be avoided if the recommendations are strictly observed and welding zone is thoroughly cleaned and dried immediately prior to welding.

3.4. CUTTING OUT DAMAGED PARTS

If the extent of the damage is so extensive that the affected zone must be cut out and replaced by a new piece the total extent of the damage must first be carefully examined to ensure that the entire damage can be remedied by the repair.

If necessary paintings and sound damping materials must be removed from the entire area of suspected damage in order to be able to verify the extent of the damage. Sound damping materials are heated with propane gas flame or hot air blower until the layer flakes and can be removed with a putty knife. Provided the tar is not heated in excess of 200°C to assure no fire hazard.

High cutting speeds are generally required to obtain clean cut edges and reduced metal heating. The following equipment can satisfy these requirements:

- Plasma cutting for clean cuts even for larger material thicknesses and high cutting speeds
- Circular saws for straight, clean cuts when cutting large pieces or narrow slots
- Belt saws for thin plates
- Metal saws
- Hand routers

3.5. SELECTION OF WELDING TECHNIQUE

Apart from attaining required strength values it is important after welding to keep straightening on the body shell to an absolute minimum.

GMAW and GTAW welding are especially well suited for these welding jobs. However the optimal arc setting required calls for considerable welding experience. To ensure full penetration tack welds etc. must be chipped out before overwelding.

Use or disclosure of the proposal data is subject to the restrictions noted on the title page of this proposal
USB00000086_0092

The following filler metals should be used:

Base Materials	Stainless Steel + Stainless Steel	Stainless Steel + LAHT Steel	LAHT Steel + LAHT Steel
Filler wire	ER308L	ER309	ER80S Ni1

Under dry conditions at room temperature materials with thickness of 15 mm and more should be preheated to 100°C.

The advantages of using one repair technique or the other must be examined from case to case.

4. INSPECTION AND FINAL MEASUREMENTS

After the repairing work, a inspection of the new welds will by Penetrant Liquids Test should be made.

The dimensions of the re-worked area and neighbouring window and door openings should be also checked.

Use or disclosure of the proposal data is subject to the restrictions noted on the title page of this proposal
USB00000086_0093

Project : Tranvía Edinburgo
CAF S. A.

Study : Calc. a -15ºC

General comment :

Electrical Parameters

Technology type	Sintered PBE
System Nominal Voltage	24 V
Maximum voltage	30 V
Minimum voltage	16,8 V
Charging voltage at 20°C/68°F / Cell	1,47 V
Cranking voltage	14,28 V
Voltage drop in line	2 V
Voltage compensation	-0,003 V / °C
Operating temperature	-15 °C
State of charge coefficient	0,9
Ageing coefficient	0,9
Charge efficiency	100 %

Cell quantity

Min number (Cranking)	20
Min number (Other)	19
Min number	19
Max number	19
Minimum voltage / Cell	0,989 V

No	Time (s)	Power (W)	Current (A)	Resist. (Ohms)
1	600	4696		
2	1200	3706		
3	1800	820		

MRX 180 x 19

Battery type	19 x MRX 180 180Ah Flame retardant plastic
Number of parallel batteries	1
Sizing temperature	-15°C
Ageing coefficient (Sintered Pbe)	0,90
State of charge coefficient	0,90
Voltage drop in line	2,00 V
Discharged capacity	124 Ah
Depth of discharge	69 %
De-rated available capacity	72 %
Capacity margin (% C5)	3 %
Discharged Energy	2377 Wh
Equipment minimum voltage	17 V
Voltage margin	0,6 V
For information :	
Maximum maintenance interval at 20°C	40,4 Months
Maximum maintenance interval at 45°C	18,6 Months
Reliability with no failed cell	0,94
MTBF assessment at cells level with no failed cell	2211000 Hours

Discharge profile (A)

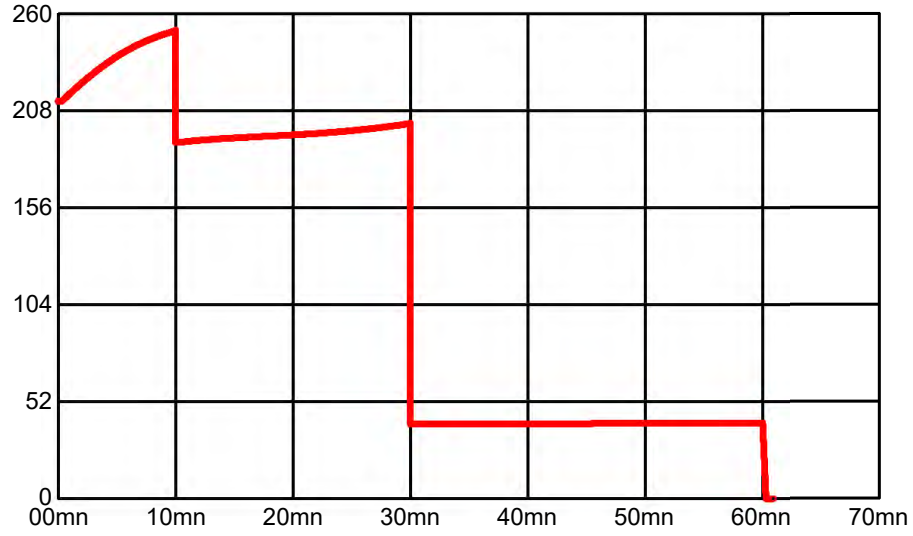

Discharged capacity (%)

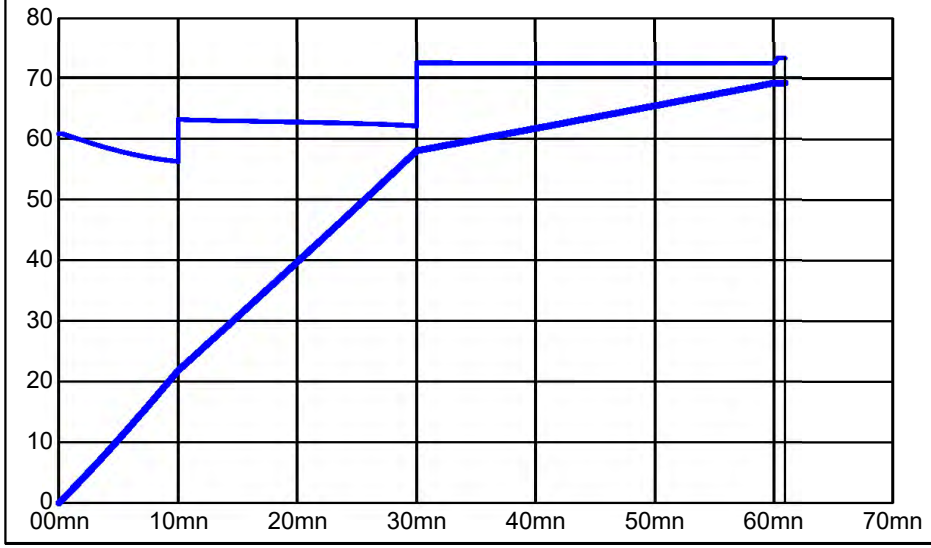

Equipment voltage (V)

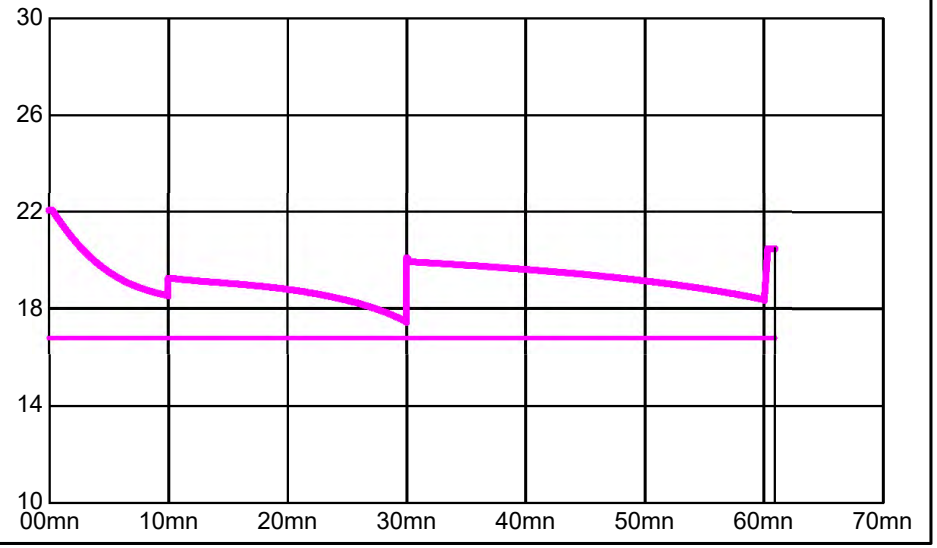

Project : Tranvía Edinburgo
CAF S. A.

Study : Calc. a 45ºC

General comment :

Electrical Parameters

Technology type	Sintered PBE
System Nominal Voltage	24 V
Maximum voltage	30 V
Minimum voltage	16,8 V
Charging voltage at 20°C/68°F / Cell	1,47 V
Cranking voltage	14,28 V
Voltage drop in line	2 V
Voltage compensation	-0,003 V / °C
Operating temperature	45 °C
State of charge coefficient	0,9
Ageing coefficient	0,9
Charge efficiency	84 %

Cell quantity

Min number (Cranking)	20
Min number (Other)	19
Min number	19
Max number	20
Minimum voltage / Cell	0,989 V

No	Time (s)	Power (W)	Current (A)	Resist. (Ohms)
1	600	4696		
2	1200	3706		
3	1800	820		

MRX 180 x 19

Battery type	19 x MRX 180 180Ah Flame retardant plastic
Number of parallel batteries	1
Sizing temperature	45°C
Ageing coefficient (Sintered Pbe)	0,90
State of charge coefficient	0,90
Voltage drop in line	2,00 V
Discharged capacity	117 Ah
Depth of discharge	65 %
De-rated available capacity	69 %
Capacity margin (% C5)	4 %
Discharged Energy	2368 Wh
Equipment minimum voltage	18 V
Voltage margin	0,9 V
For information :	
Maximum maintenance interval at 20°C	40,4 Months
Maximum maintenance interval at 45°C	18,6 Months
Reliability with no failed cell	0,94
MTBF assessment at cells level with no failed cell	2211000 Hours

Discharge profile (A)

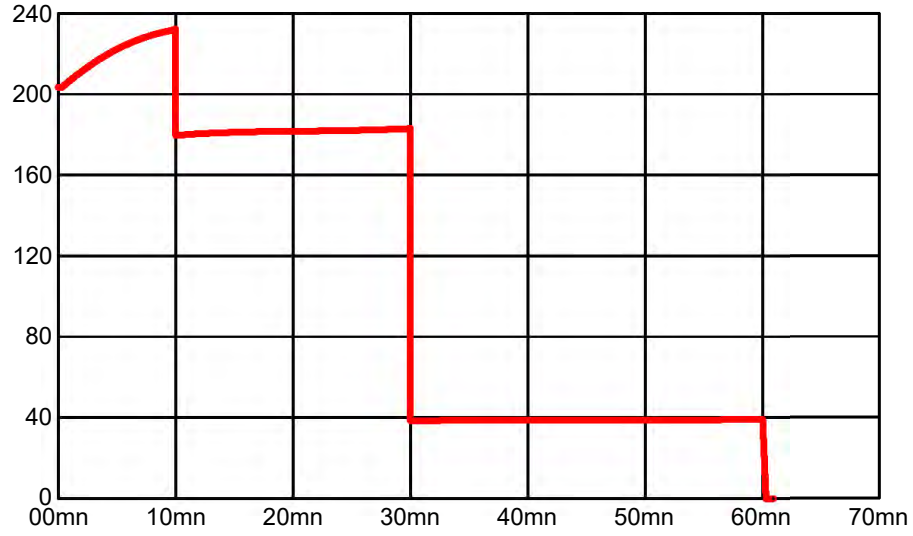

Discharged capacity (%)

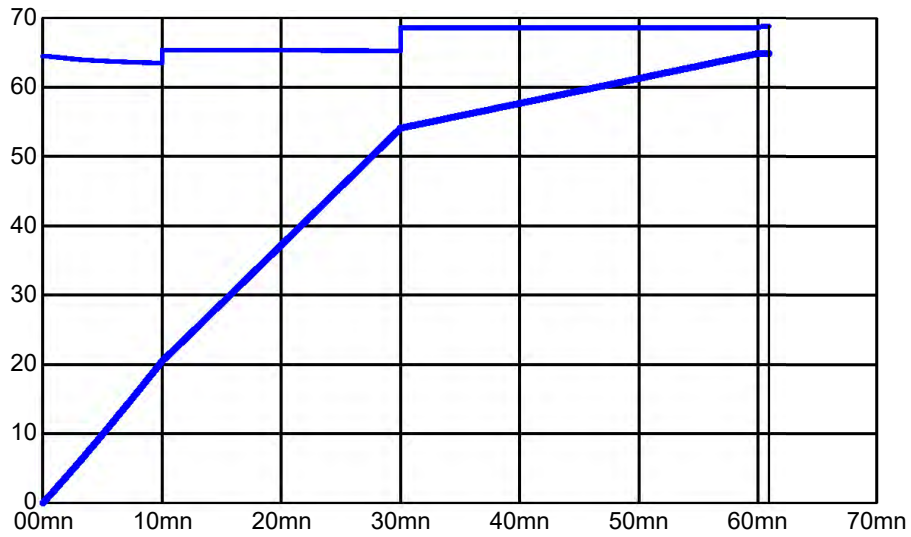

Equipment voltage (V)

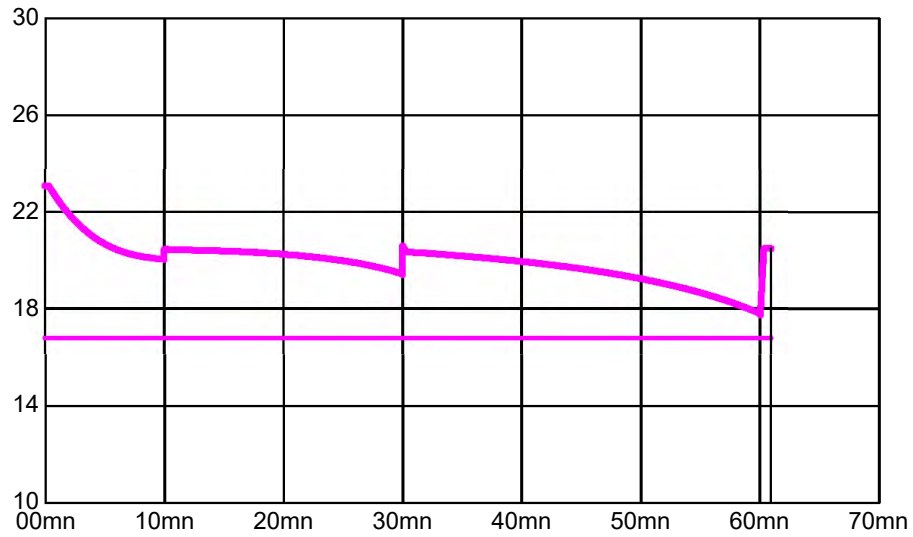

RELIABILITY, AVAILABILITY AND MAINTAINABILITY (RAM) PLAN

ISSUE 2

INDEX

1. INTRODUCTION 3

2. PURPOSE 4

3. SCOPE 5

4. GLOSSARY 5

5. DEFINITIONS 6

6. CAF ROLLING STOCK RAM POLICY 6

6.1. RAM DESIGN CRITERIA 7

7. RAM MANAGEMENT AND ORGANISATION 9

7.1. THE RAMS ENGINEER 10

7.2. THE QUALITY ASSURANCE ENGINEER 10

7.3. THE FIELD SERVICE SUPPORT ENGINEER 11

8. RAM REQUIREMENTS 11

9. PRODUCT LIFECYCLE AND RAM ACTIVITIES 11

10. THE ROLLING STOCK RAM STUDIES AND TASKS 17

11. CRITERIA FOR THE TRAM SERVICE WITHDRAWAL 17

12. FRACAS AND FAILURE COLLECTING DATABASE DEFINITION 18

1. INTRODUCTION

The enclosed document contains CAF's provisional RAM Plan for use on the Trams for the TIE project. It details CAF's general philosophy for RAM (Reliability, Availability and Maintainability) management.

This Plan (and its former version provided at the BAFO) were elaborated based on CAF's expectations related to TIE requirements on RAM for the tram. Yet these expectations have not been substantiated in any tram-specific document, to CAF's knowledge. In view of this, and also considering that, whatever the final approach selected, this shall need to be coordinated with the Infracos' own (also unknown to CAF), it is anticipated that a final RAM Plan shall need to be agreed with TIE after the TSA contract signature. Thus this document should be read as a declaration of principles made by CAF, and as a generic commitment to undertake value-added RAM studies and establish a RAM management approach, based on current best practice, as advocated by the EN 50126 and other relevant standards. It is also noted that this Plan should logically be aligned with the Safety Management Plan for the trams, which has been agreed with TIE to be updated during the design phase of the vehicles (i.e., also after TSA contract signature).

This plan thus sets out in a logical sequence the means by which CAF, in principle, intends to meet the Rolling Stock RAM requirements as laid down by TIE Technical Specification.

The RAM optimisation requires its adequate management from the early project stages. Based on this idea, CAF will consider the RAM improvement as a design parameter. Thus, the design will not be focused solely on the compliance of the performance characteristics, but also on the optimisation of the final product's RAM. With this philosophy as a basis, CAF will use the RAM improvement criterion as an additional parameter to consider when diverse technical solutions' consequences are analysed. With that aim, specific reliability and maintainability internal design reviews will be held, past performance experiences will be analysed, their applicability to this project studies and lessons learned applied accordingly.

For that reason, the proposed management strategy is based on the 'As-Practical-As-Possible' approach. The reason is that the most important objective of any RAM Plan must be to influence the design, apply improvements based on past experience and provide the tools to identify critical RAM related points. According to CAF's experience, the best way to achieve that objective is by means of a practical approach instead of a more 'theoretical' one. A clarifying example of the difference between both approaches is the reliability prediction. That prediction can be based on real field experience (from the same or similar components on other projects) or on failure rates from standards such as MIL-HDBK-217 for instance. The experience shows that the first approach gives rise to more accurate results.

The RAM Plan identifies the controlling documents, specifies the resources available, discusses typical methodologies that will be used, and references all

relevant TIE and National or International standards applicable to the present contract.

This draft issue of the RAM Plan contains CAF's provisional proposal for the management of the RAM along the project. CAF is open to analyse the contents of the present document with TIE and study any proposal or comment to modify it.

2. PURPOSE

The RAM Plan and associated program of activities includes the following objectives:

- To ensure reliability and maintenance activities are performed in a timely manner and that the outputs from the activities provide an effective input to the overall Rolling Stock design and development effort.
- To provide system engineering and design teams with detailed guidance on reliability and maintainability engineering philosophy (e.g. selection of parts/equipment/systems, de-rating, standardisation, maintenance policy etc.).
- To provide guidance on maintenance verification and acceptance criteria for Rolling Stock systems that will be provided. This will include early test and verification of proposed systems.
- To identify design weaknesses through analysis and test so that reliability can be improved by implementing changes to the design.
- To ensure through critical and timely RAM Analysis Design Reviews that the RAM Plan is proceeding in accordance with project milestones and that any risk of not meeting the TIE requirements is identified and managed.
- To provide a demonstration that the Rolling Stock design meets the TIE reliability and maintenance requirements.
- To provide guidance on reliability verification and acceptance criteria for Rolling Stock systems that are being procured Off-The-Shelf.
- To ensure that subcontractors and system suppliers adhere to and meet the TIE RAM requirements and policies.
- Initial identification and subsequent management and control of lived and critical items to determine the need for condition monitoring, performance monitoring, preventive and, corrective maintenance.
- Initial estimate and subsequent management and control of the support requirements including the need for special test equipment (built-in or separate) and any other special facilities including those for software testing and support

The overall aim is to ensure, as far as is practicable that, through the application of a program of RAM engineering, the Rolling Stock design is fault tolerant and critical failures are eliminated through the design effort and the application of condition monitoring, test and inspection and appropriate preventative and corrective maintenance policies.

3. SCOPE

The RAM Plan described in this document applies to the whole EMU including the following systems:

- Bogies and suspension
- Carbodies and interiors
- Passenger access doors
- Communication equipment
- Friction brake equipment
- Heating, Ventilation and Air Conditioning system
- Couplers
- Traction equipment
- Auxiliary converter
- Battery
- Electrónica De Diagnóstico (EDD)

Although this Plan's scope includes the whole tram with its systems, depending on the nature and criticality of the systems, different degree of analysis and documentation will be required for them. This point shall be agreed at early design stages between TIE and CAF.

The application of the present RAM Plan extends to the whole product lifecycle, from the 'Concept' phase to the 'Modification and Retrofit'.

This plan is applicable to all of CAF's assigned personnel and its suppliers and subcontractors.

4. GLOSSARY

CAF	Construcciones y Auxiliar de Ferrocarriles
EDD	Electrónica De Diagnóstico

RAM	Reliability, Availability and Maintainability
RAMS	Reliability, Availability, Maintainability and Safety
FMEA	Failure Modes and Effects Analysis
FMECA	Failure Modes and Effects Criticality Analysis
FRACAS	Failure Reporting and Corrective Action System
MIL-STD	Military Standard
MIL-HDBK	Military Handbook

5. DEFINITIONS

For the purposes of this document definitions from EN50126 apply.

6. CAF ROLLING STOCK RAM POLICY

According to CAF's policy, RAM engineering will be given equal weighting in the design process as the more traditional performance characteristics. Moreover, a key objective of CAF's policy will be to optimise RAM performance and to achieve this purpose, reliability and maintainability will be some of the parameters analysed from early design stages. The aim is to meet the performance requirements based on the identification and analysis of the TIE operational performance requirements, physical environments and Customer's resources available to support the Rolling Stock in operation. This is achieved with a policy of:

Managing the contributions to system reliability made by individual system elements and thus ensuring the selection of the correct design or system/material/product to meet the Client's requirements.

Identifying design deficiencies, which prevents from the selection of unsuitable parts and materials.

Evaluation of the maintenance and support aspects of the proposed and selected system throughout all project phases.

The overall aim is to design, develop and deliver robust Rolling Stock systems that are available, operate reliably and are easily maintainable in the specified TIE environment.

Another important aspect of CAF's approach is to appoint a single RAMS Engineer responsible for the coordination of the RAM and Safety Plans with the aim of ensuring that the detailed interactions between reliability, maintainability and safety engineering are effectively managed and controlled.

The RAMS Engineer will produce RAM guidance that will be required to provide detailed reliability design criteria, targets and general advice to the system engineers and design teams. The intention will be to explain that RAM is an inherent characteristic of the design and must be addressed during the design and development phase.

Based on our philosophy, the present RAM Plan and the activities included will be **as practical as possible**. According to this idea the following criteria will be applied:

- Past performance information will be considered as an information source of paramount importance.
- Real in-service information will be preferred to other alternative reliability data sources such as standards or engineering handbooks (such as MIL-HDBK-217, IEEE Std 500, etc).
- CAF will closely work with TIE and with its own suppliers for collecting their own past performance information, analyse that information and correct past errors.
- CAF will identify RAM critical aspects and will provide enough evidence to TIE to demonstrate their adequate management.
- The RAM Plan will be applied to the whole product lifecycle phases.
- CAF will apply a complete and standardised Failure Reporting and Corrective Action System (already in use in multiple projects on a wide variety of railway markets) with the aim to collect real in service performance information and provide the adequate means for an optimum reliability growth.

6.1. RAM DESIGN CRITERIA

According to CAF's habitual maintainability policy, the following features will be considered as design rules:

- **Accesibility**: All subsystems and components requiring preventive maintenance shall be readily accessible for service and inspection. Accessibility of components will be proportional to frequency of maintenance and repair of the components; that is, the more the need to access a component, the easier the access shall be. No active electrical or mechanical components that require maintenance shall be structurally embedded to preclude convenient access for repair or replacement.
- **Modular design**: Modular design principles shall be employed to the greatest extent practical. Components shall be packaged together in replaceable subassemblies, according to the logical function that they perform. Components or subassemblies requiring occasional removal shall preferably be plug-in units.

- **Interchangeability**: Assemblies or components that are functionally interchangeable shall be physically interchangeable. Assemblies or components that are not functionally interchangeable shall not be physically interchangeable.

- **Adjustments**: The need for adjustments shall be avoided. When adjustment points cannot be avoided, they shall be readily accessible, adequately identified, and self-locking to prevent inadvertent or drift.

- **Skills and Training**: The maintenance requirements of the train and its subsystems and components shall be in accordance with the skills and training of Authority maintenance personnel.

- **Special Tools**: The number of special tools required for maintenance and repair will be minimized.

- **Panels and Openings**: Panels and openings shall be of sufficient quantity, size, and placement to permit ready access from normal work areas and positions. Adjustment controls, fittings, safety valves, and such shall be directly accessible through panels and openings. Self-retaining fasteners shall be used whenever possible. Special access openings tools shall not be used, unless considered necessary to prevent vandalism.

- **Cable connections**: Cable connectors shall be spaced far enough apart so that they can be grasped firmly for connecting and disconnecting. Connectors shall be properly labeled and keyed so that they cannot be interchanged or improperly installed. Signal and power pins shall not be adjacent to one another.

- **Lifting Assists**: Handles, lifting lugs, or approved functional equivalents shall be provided on heavy components.

- **Visual Inspection**: Visual inspection of equipment shall be unobstructed.

- **Structural Elements**: Access to structural components shall be provided to the greatest extent practicable to allow inspection for cracks, corrosion, and structural integrity.

- **Test Points**: Built-in test points shall be provided and marked. Major components having test panels or test points shall be located for easy accessibility and shall permit external monitoring of critical functions. Test points shall be protected against environmental damage and human error.

- **Fault isolation**: Failure indicators shall be provided and identified. Systematic fault isolation procedures shall be developed and included in the maintenance manuals.

- **Labelling**: All test points, fault indicators, modules, wire junctions, pipes, tubes, wires, etc., shall be identified by name plates, color coding, number coding, or other means to assist maintenance personnel.

- **Hardware**: Standard, commercially available industrial components and hardware shall be used whenever possible.

Apart from the previous general criteria, TIE's own ones will be applied.

7. RAM MANAGEMENT AND ORGANISATION

CAF acknowledges that the key for the success of the RAM is ensuring that the RAM Plan can influence those key aspects that result in the desired levels of performance, reliability and ease of maintenance.

Reliability and maintainability requirement achievement depends on diverse areas and hence, different CAF departments will participate in the process of defining, controlling and achieving those requirements. Hence, a multidisciplinary group (called RAM Control Group) will eventually be established in CAF with the following objectives:

- Define RAM strategy

- Define measures to be adopted for RAM optimisation

- Collect and analyse service field data from other projects

- Apply experiences learned from other projects

- Assure an adequate management of the RAM along the whole project

The RAM Control Group will, in principle, be comprised of the following experts:

- RAMS Engineer

- Project Manager

- Project Lead Engineer

- Manufacturing Engineer(s)

- Systems Engineer(s)

- Field Service Support Engineer(s)

- Quality Assurance Engineer(s)

The TIE Technical Specification and applicable standards will be used as the basis for the definition of RAM engineering activities and management. RAM Engineering

requirements will be defined in the “Sub-suppliers RAMS Requirements” document that will be produced for all Rolling Stock systems. The specifications include qualitative and quantitative RAM targets and design criteria requirements.

All CAF Sub-contractors and suppliers will be responsible for providing the required verification of their systems within the terms of their contracts. The CAF Sub-supplier specification includes the relevant Quality and Reliability requirements, derived from the CAF Quality Assurance Plan and the TIE Technical Specification. CAF will give due consideration to the quantity and quality of supporting evidence offered by each sub-contractor to show compliance with the Technical Specification requirements, particularly where this evidence is in the form of actual operational usage in similar applications or environments. Sub-suppliers will be responsible for their systems’ RAM design justification and demonstration.

Following some key personnel's responsibilities are defined:

7.1. THE RAMS ENGINEER

The CAF approach is to appoint a single RAMS Engineer responsible for the coordination of the RAM and Safety Management Plans. This management policy will ensure that the detailed interactions between reliability, maintainability and safety engineering are effectively managed and controlled.

The RAMS Engineer will coordinate the efforts of CAF’s different departments in RAM related tasks and activities.

In order to assure attainment of the overall reliability and maintainability goals, it is essential the coordination of all subsystems’ suppliers to ensure that all of them know the overall system’s requirements, their own subsystems’ requirements and how CAF intends to meet those requirements. The sub-suppliers will have to define their own RAM management policies. CAF RAMS Engineer will be the responsible for coordinating all sub-suppliers’ reliability related efforts and for ensuring that all of them work with compatible particular goals.

Sub-suppliers’ reliability design justification and demonstration supporting documentation will also be reviewed by the CAF RMS Engineer before being offered to TIE for approval.

7.2. THE QUALITY ASSURANCE ENGINEER

Procedures and controls, including piece part selection and screening, manufacturing process controls, procurement controls, and test procedures to be utilised during production to assure achievement of reliability requirements will be defined in the CAF Quality Assurance Plan and the Test and Inspection Plans by the Quality Assurance Engineer. He will also control the application of these plans.

The Quality Engineer will also be the responsible to assure that the purchased material complies with the specified requirements and standards, which will be defined in the product design phase. That is, he will assure that the purchased

material has the required quality to make possible the attainment of the reliability requirements.

7.3. THE FIELD SERVICE SUPPORT ENGINEER

In line with the CAF's aim of assuring that all areas involved in RAMS related issues jointly work to achieve RAMS management optimisation, the Field Service Support Engineer will provide real service data based on CAF's experience and will assess sub-suppliers' R&M data to assure that realistic predictions are made. Furthermore, he/she will assure that proposed solutions do really improve RAM performance and that problems happened in other projects are solved.

8. RAM REQUIREMENTS

RAM requirements are not defined yet by TIE. It is assumed that these will be fixed in the TSA contract. CAF will otherwise, bona fide, apply those considered to be necessary in order to ensure that the tram manufactured presents a set RAM characteristics recognisable as compatible with current best practice.

9. PRODUCT LIFECYCLE AND RAM ACTIVITIES

As it has been stated before, the RAM Plan extends to the whole product lifecycle from the first concept phase to the Modification and Retrofit (please take into account that the phase 'Decommissioning and Disposal' is out of CAF's scope).

The following figure depicts the different system lifecycle phases for a rolling stock application:

Figure 10-1: System lifecycle phases

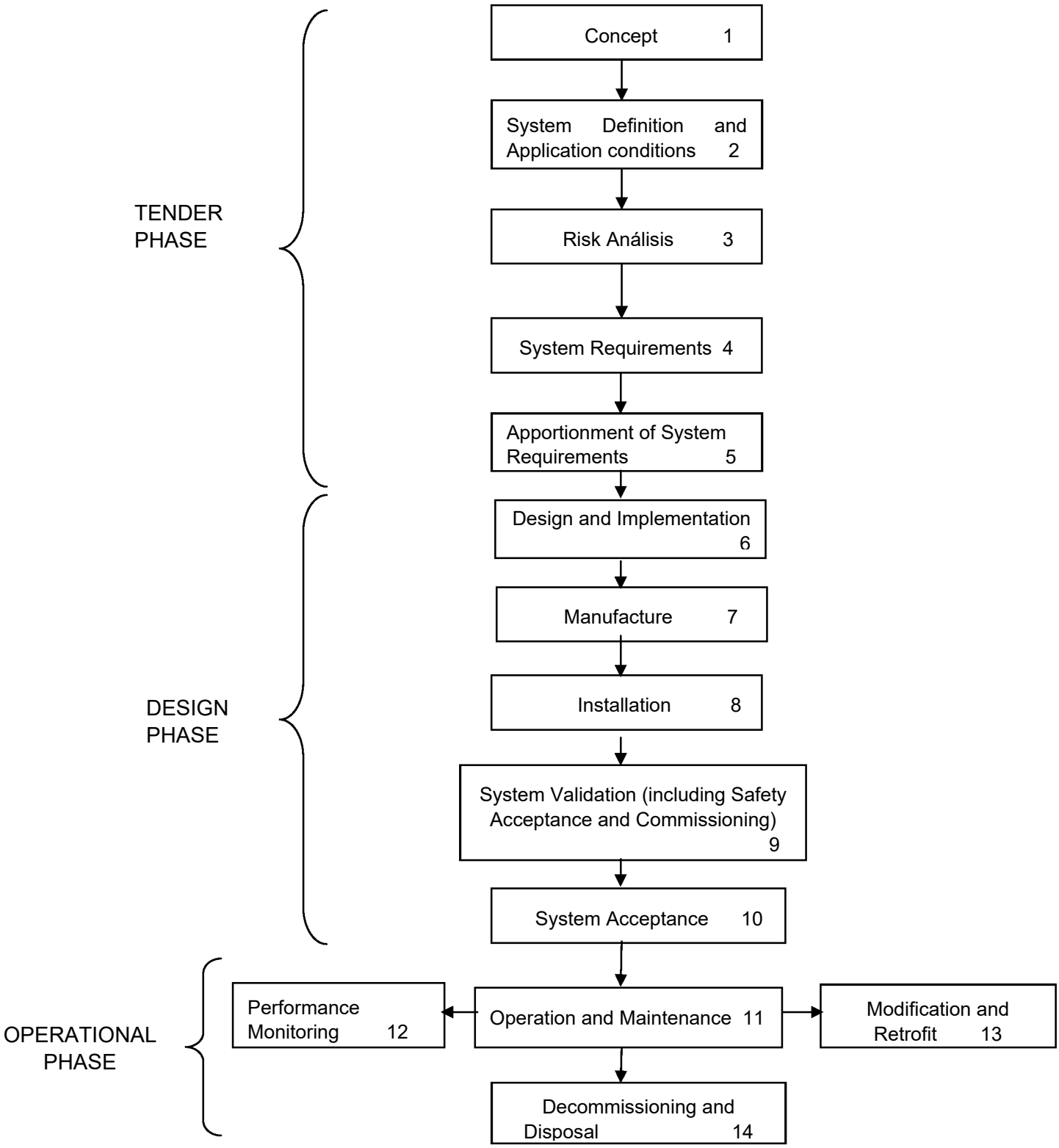

The activities to be carried out along the whole lifecycle are distributed as follows:

Phase 1: Concept

The objective of this phase is to develop a level of understanding of the system sufficient to enable all subsequent RAM lifecycle tasks to be satisfactorily performed. It will include the following activities:

- Analysis of TIE requirements (RAM and others)
- Obtain an understanding of the environment of the system
- Define similarities with other CAF past project. Collect past performance RAM information.

Phase 2: System definition and application conditions

The main objectives of the second phase are to decide the RAM strategy for the project, define the RAM management approach and produce the RAM Plan. The main activities to carry out are:

- Define RAM strategy for the project
- Study past performance RAM information.
- Produce the RAM Plan
- Study system's main features (using the system description) and their impact into RAM

Phase 3: Risk Analysis

This phase is mainly applicable to the Safety Plan. There are not RAM activities for this phase.

Phase 4: System requirements

The aim is to define the attainable RAM requirements. Based on that aim, during this phase the next activities will be carried out:

- Define achievable RAM figures
- Define RAM requirements. Those requirements will include both applicable requirements from TIE Technical Specification and RAM requirements defined by CAF.
- Define RAM related functional requirements

- Carry out a train level functional FMECA for the identification of the reliability critical functions (this activity can alternatively be substituted by engineering analysis of an equivalent tram existing design and performance).

Phase 5: Apportionment of system requirements

During this phase, apportionment of the RAM requirements to subsystem level is carried out. Thus, the phase will include:

- Allocate functional requirements to designated sub-systems
- Allocate RAM requirements to designated sub-systems
- Define the document describing the RAMS requirements for the sub-suppliers (sub-suppliers RAMS requirements)

Phase 6: Design and implementation

The objectives of this phase include:

- Create systems and sub-systems conforming to the defined RAM requirements
- Demonstrate that systems and sub-systems conform to the defined RAM requirements

For achieving those objectives the following activities will be carried out:

- Collect TIE's past performance experience and compare with CAF's data. Assess RAM allocation's adequacy and modify if required.
- Collect Authority's experience and identify reliability and maintainability critical items and aspects to consider
- Periodical meetings of the RAM Control Group (refer to section 8): control adequate evolution of the RAM Plan and implement the required measures to optimise RAM
- Carry out a Reliability Prediction based on real data (using subsystem level FMECAs or not).
- Manage improvement of reliability-critical points
- Define quality measures to adopt for reliability improvement
- Define quality controls for manufacturing
- Joint TIE/ CAF analysis of the tram maintainability.

Phase 7: Manufacturing

During this phase the adequate measures must be taken to assure that the manufactured systems and sub-systems meet the defined RAM requirements. For that reason, those activities will be carried out:

- Define RAM related testing procedures
- Commence Failure Reporting and Action System (FRACAS).

Phase 8: Installation

The aim of this phase is to assemble and install the total combination of sub-systems and components required to form the complete system. For that reason, the phase will encompass the next activities:

- Define the list of spare parts
- Define staff training documentation and procedures

Phase 9: System validation (including safety acceptance and commissioning)

The main aim of the phase is to validate that the final product meets the defined safety requirements. Hence, the following activities are defined:

- Control testing results and review impact into RAM

Phase 10: System acceptance

The purpose of this stage is to assess compliance of the defined RAM requirements and accept the system for entry into service. Thus, those tasks will be done:

- Collect generated RAM information and assess that they fit with the defined in the RAM Plan

Phase 11: Operation and maintenance

The objective of this phase will be to operate (within specified limits), maintain and support the system such that compliance with RAM requirements is maintained. For that purpose, those tasks will be carried out:

- Assessment of the adequacy of the information, data and other statistics produced
- Assessment of the adequacy of the methods, tools and techniques used within the phase
- Verification that changes in support arrangement are consistent with system RAM requirements

Phase 12: Performance monitoring

The objective is to maintain confidence in the RAM performance of the system. Related tasks are:

- Collection of operational performance and RAM statistics
- Acquisition, analysis and evaluation of performance and safety data
- Check that the assumptions made in the RAM Plan remain valid

Phase 13: Modification and Performance monitoring

The aim of the phase will be to control system modifications and retrofit tasks to maintain system RAM requirements. With that purpose, a procedure will be defined to implement system modifications, study their possible impact into RAM. Hence those tasks will be carried out:

- Application of FRACAS for implementation of modifications
- Study of modification impact into RAM

10. THE ROLLING STOCK RAM STUDIES AND TASKS

The RAM studies and activities to be carried out (in principle, within the limits derived from the provisional status of this Plan) are summarised in the table below:

Table 11-1 - RAM Tasks

Task No.	Description	Lifecycle phase (see section 7)												
		1	2	3	4	5	6	7	8	9	10	11	12	13
1	Define RAM Plan	-	D	-	-	-	U	-	-	-	-	-	-	-
2	RAM Allocation	-	-	-	-	A	-	-	-	-	-	-	-	-
3	Sub-suppliers RAMS requirements	-	-	-	-	A	-	-	-	-	-	-	-	-
4	Collect Authority's RAM past experience	-	-	-	-	-	A	-	-	-	-	-	-	-
5	Train level functional FMECA	-	-	-	D	-	-	-	-	-	-	-	-	-
6	Reliability Prediction (by means of subsystem level FMECAs or not)	-	-	-	-	-	D	U	-	-	-	-	-	-
7	Maintainability study	-	-	-	-	-	A	A	-	-	-	-	-	-
8	Monographic RAM meetings with Authority	-	-	-	-	-	A	A	A	-	-	-	-	-
9	List of spare parts	-	-	-	-	-	-	-	D	-	-	-	-	-
10	FRACAS and review RAM affecting results	-	-	-	-	-	-	A	A	A	A	A	A	A
11	Assessment of RAM compliance and reliability growth	-	-	-	-	-	-	-	-	-	-	-	-	A

Applicable code:

A – Activity

D – Deliverable document

U – Update if required

11. CRITERIA FOR THE TRAM SERVICE WITHDRAWAL

CAF considers the following “failures” as conditions to take a tram out of service:

- More than 3 doors of the same side locked out
- One door can be closed

- Lost of battery charger
- Lost of the Dead Man functionality
- Lost of friction brake in more than one bogie
- Total lost of radio
- Simultaneous lost of two front lights
- Simultaneous lost of two tail lights
- Lost of HV or cabin HVAC that makes the saloon or cab temperature to exceed 30ºC.

12. FRACAS AND FAILURE COLLECTING DATABASE DEFINITION

In order to assure an adequate reliability growth, the implementation of an adequate Failure Reporting and Corrective Action System (FRACAS) is of paramount importance. CAF applies a standard FRACAS in all its projects. The FRACAS includes the use of a database for RAM information collecting. For the verification of compliance of the reliability values with the Authority's requirements, CAF will use its failure collection database, known as SSAIS.

The SSAIS system contains automatic features to calculate diverse important parameters such as:

- Mean Kilometres Between Failures (MKBF) and Mean Kilometres Between Service Affecting Faults (MKBSAF) (for the overall system and for the different sub-systems and components)
- Mean Time To Repair (MTTR)
- Distribution of failures among the diverse sub-systems and components
- Man-hours required for the corrective maintenance operations

As an example, the following pictures show some of the characteristics of the database:

Figure 12-1: MKBF calculation

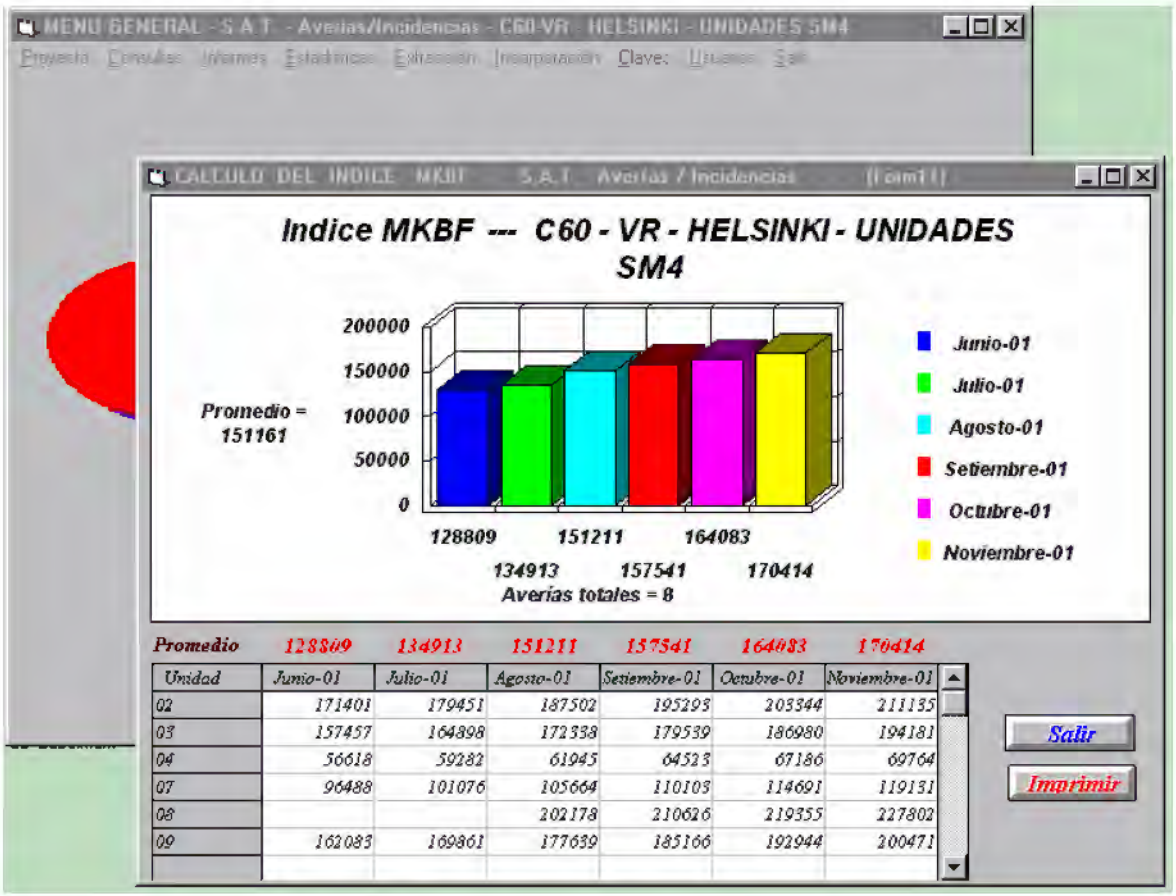

Figure 12-2: Failure evolution graph

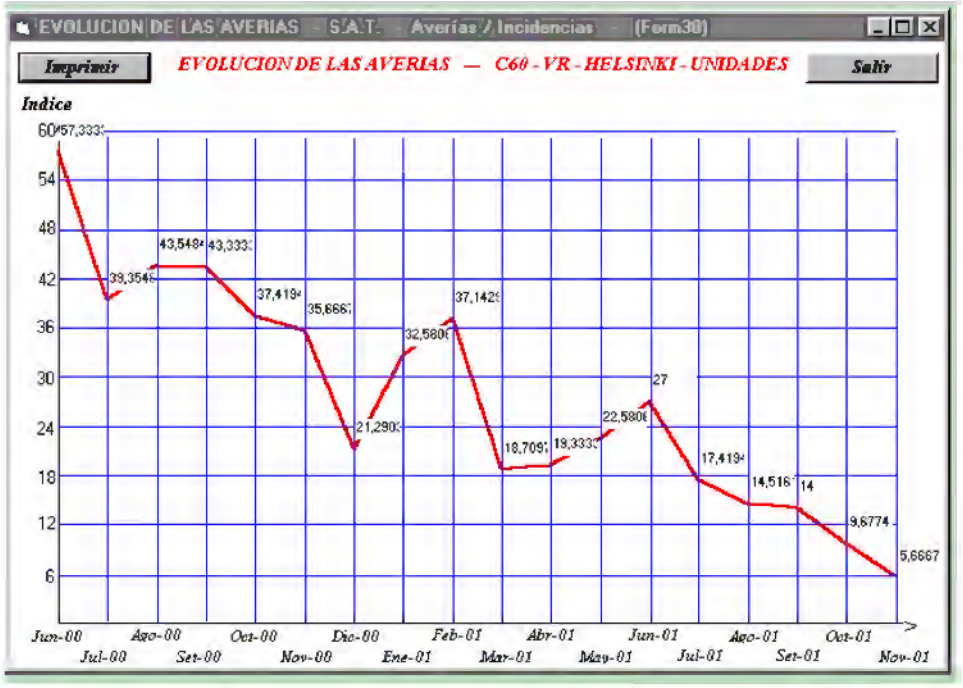

Figure 12-3: MTTR calculation

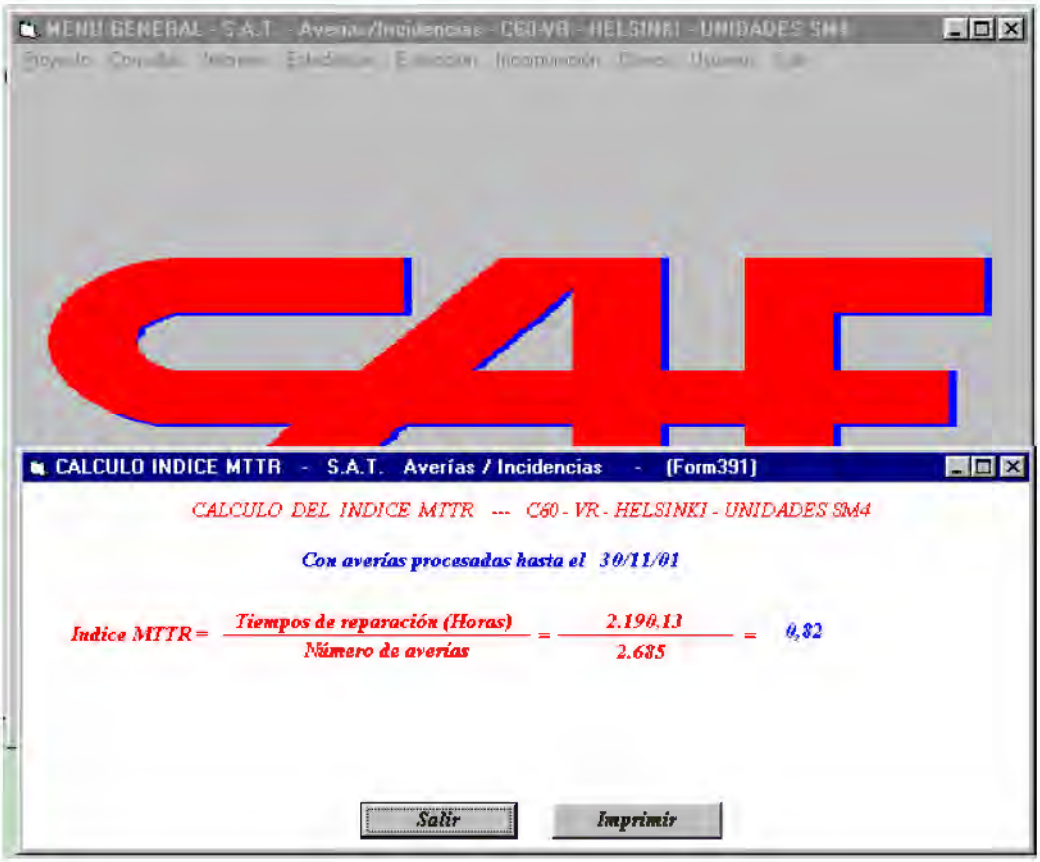

Figure 12-4: Failure distribution

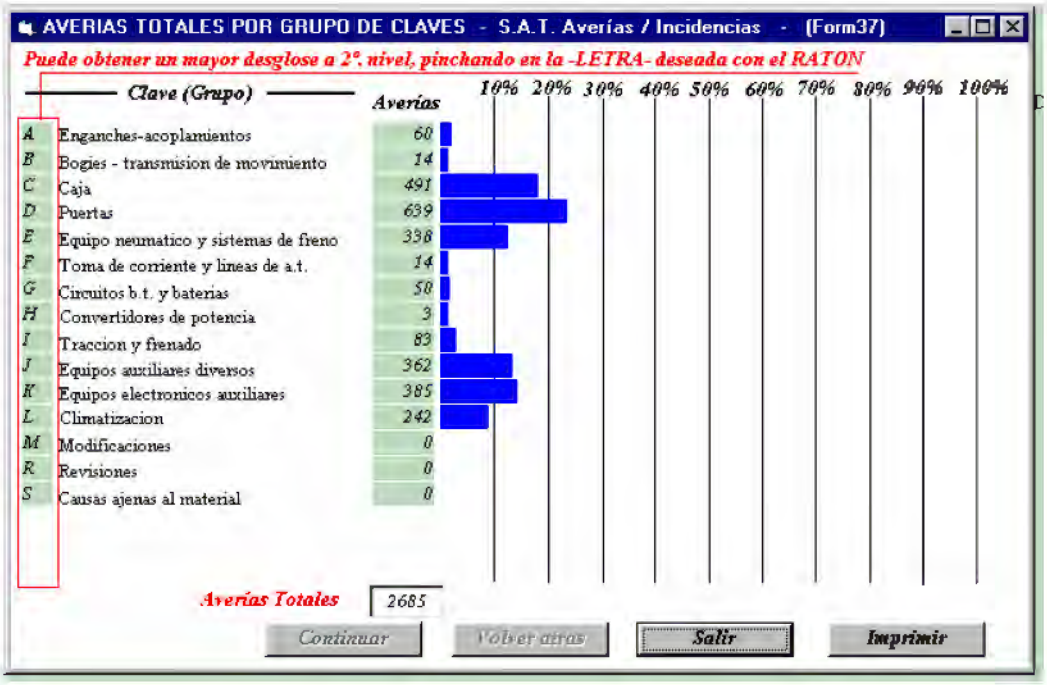

CAF EDINBURGH TRAM

SAFETY MANAGEMENT PLAN

(SMP)

Use or disclosure of the proposal data is subject to the restrictions noted on the title page of this proposal

USB00000086_0120

TITLE:	CAF Edinburgh Tram Safety Management Plan
REPORT NO.:	Q.00.072.900
ISSUE:	FIRST
DATE:	16TH MAY 2007

AUTHOR:	Chris Hoare (AEGIS Engineering Systems Ltd)
	Javier Lucia (CAF)
APPROVED BY:	Unai Zubeldia (CAF)

Use or disclosure of the proposal data is subject to the restrictions noted on the title page of this proposal

USB00000086_0121

1. INTRODUCTION 6

1.1. GENERAL 6

1.2. OBJECTIVES 6

1.3. SCOPE 7

1.4. AUTHORITY 7

1.5. GLOSSARY / ABBREVIATIONS 7

2. PROJECT DESCRIPTION 9

2.1. INTRODUCTION 9

2.2. EDINBURGH TRAM 10

2.2.1. Bogies and suspension 10

2.2.2. Carbodies and interiors 11

2.2.3. Passenger access doors 12

2.2.4. Communication equipment 13

2.2.5. Friction brake equipment 14

2.2.6. Heating, Ventilation and Air Conditioning system 14

2.2.7. Couplers 15

2.2.8. Traction equipment 15

2.2.9. Auxiliary converter 15

2.2.10. Battery 15

3. SAFETY POLICY AND CRITERIA 16

3.1. CAF SAFETY POLICY 16

3.1.1. Safety Strategy 16

3.1.2. CAF Rolling Stock Safety Principles 17

3.1.3. Safety Criteria 17

3.1.4. Safety Training 18

3.1.5. Statement of Commitment 18

4. SYSTEM SAFETY MANAGEMENT AND ORGANISATION 19

4.1. TRAM SAFETY MANAGEMENT SYSTEM 19

4.2. MANAGEMENT ORGANISATION AND RESPONSIBILITIES 20

Use or disclosure of the proposal data is subject to the restrictions noted on the title page of this proposal

USB00000086_0122

4.2.1. Introduction 20
4.2.2. UK Approvals Requirements and Responsibilities 20
4.2.3. Office of Rail Regulation (ORR) 21
4.2.4. Near Neighbours 21
4.2.5. SDS Edinburgh Tram Network Team 21
4.2.6. Construcciones y Auxiliar de Ferrocarriles, SA (CAF) 21
4.2.6.1 Project Manager 22
4.2.6.2 Safety Manager 22
4.2.6.3 Quality Assurance Management 23
4.2.6.4 Supplier Management 23

5. SYSTEM ENGINEERING AND SAFETY ASSURANCE PROCESS 25

5.1. INTRODUCTION 25
5.2. PRELIMINARY SAFETY ACTIVITIES 25
5.3. HAZARD LOG REVIEW 25
5.3.1. Engineering System- Lifecycle Phases 26
5.3.2. Phase 1: Concept and Planning 26
5.3.3. Phase 2: System and Sub-System Requirements 28
5.3.4. Phase 3: Preliminary and Detailed Design 28
5.3.5. Phase 4: Release to Manufacturing 29
5.3.6. Phases 5 and 6: Unitary and Integration Testing 30
5.3.7. Phase 7: Commissioning 30
5.3.8. Phases 8 and 9: Operation and Through Life Support 31

6. HAZARD IDENTIFICATION AND RISK ASSESSMENT 32

6.1. INTRODUCTION 32
6.2. GENERIC PROCESS MAP 32
6.3. HAZARD IDENTFICATION AND RISK ASSESSMENT (HIRA) 33
6.3.1. Tramway Network Level HIRA 33
6.3.2. System and Sub-System Hazard Identification Studies 33
6.3.3. System Safety Risk Ranking Matrices 33
6.3.3.1 Frequency of Hazardous Events 33
6.3.3.2 Hazardous Event Severity Level 33
6.3.3.3 Risk Evaluation and Acceptance Criteria 34

Use or disclosure of the proposal data is subject to the restrictions noted on the title page of this proposal

USB00000086_0123

6.3.3.4 Actions to be Applied Against Risk Categories 34

7. REFERENCES.....35

Use or disclosure of the proposal data is subject to the restrictions noted on the title page of this proposal

USB00000086_0124

1. INTRODUCTION

1.1. GENERAL

This document is the Safety Management Plan for the Edinburgh Tram. The scope of the plan covers the safety management process that will be implemented and the safety engineering activities that will be undertaken during the design, manufacture, testing and commissioning phases of the Project. Maintenance, if performed by CAF, will be the subject of a separate plan.

The Tram Safety Management Plan sets out the means by which the Construcciones y Auxiliar de Ferrocarriles, SA (CAF) Project Team will ensure that all potential hazards associated with the design and development of the Tram are identified and objective evidence presented to support the claim that the safety risks have been controlled to negligible or tolerable and ALARP levels. The outputs from these activities will be documented and provide the staged Tram "Case for Safety" that is needed to gain regulatory body approval for the Edinburgh Tram Network.

1.2. OBJECTIVES

Safety will be given full consideration in all aspects of the Tram Project including management planning, design, manufacturing, installation, testing, operations and maintenance support. Hazards that exist in all stages of the system life cycle will be identified, assessed, eliminated or the risk shown to be negligible or tolerable and ALARP. Key objectives identified to successfully manage safety are:

- Early and ongoing liaison with all stakeholders and when appropriate the UK Safety Authority, through the System Assurance Manager (SAM).
- Identification of applicable engineering standards, codes of practice and client specifications and the application of a comprehensive verification and validation plan to demonstrate compliance.
- Conducting a series of hazard identification studies and analysis to identify and quantify the safety risks to passengers, staff and the general public.
- Integrating the hazard management process into the overall CAF system engineering process to ensure that suitable and sufficient design control measures are agreed to control the risk. The process will interface management with any assumptions made with regard the operation and maintenance of the trams being communicated to those responsible for their implementation.
- Ensuring that the safety analysis and assessment techniques and risk acceptance criteria are consistent with those specified in the Edinburgh Tram Network System Safety Management Plan (SSMP) [Ref. 1].
- Preparing and submission of objective evidence in a series of safety submissions during the Project life cycle that will support the progression to the next phase. As required by the Edinburgh Tram Network SSMP CAF will submit "Case for Safety" Reports at the preliminary design, final design and handover stages of the project.

Use or disclosure of the proposal data is subject to the restrictions noted on the title page of this proposal

USB00000086_0125

1.3. SCOPE

This Safety Management Plan encompasses all safety-related activities associated with the design and delivery of the Edinburgh Tram. There are two main areas within the scope of the plan:

- **Engineering Safety**: this covers all issues associated with designing, testing and commissioning the Trams and will support the overall demonstration that the tram working in the integrated tramway system will operate safely in respect of passengers, staff and public, including all users of roads affected by the introduction of the Tram Network.
- **Operational Safety** – For CAF this will include processes that will ensure the Tram Operator and Infrastructure Manager are advised in a timely manner of all system safety related issues that require management during commissioning and revenue service. In this respect Operation includes shadow running, service running, maintenance, disposal and decommissioning.

The CAF Safety Management System has been tailored in application to meet the specific requirements of the Project and in particular the Edinburgh Tram Network SSMP. The safety management system fallows the guidance and requirements of EN 50126 [Ref. 2], the Network Rail sponsored Engineering Safety Management Issue 4 [Ref. 3] and the ORR's Railway Safety Principles and Guidance [Ref. 4]

1.4. AUTHORITY

Authority for the development and issue of the CAF Tram Safety Management Plan is derived from the CAF System Engineering process. The CAF Edinburgh Tram Project Manager will lead the safety culture and provide leadership and oversight of all safety management activities that are the responsibility of CAF. Scheduled safety management reviews will be undertaken ond when necessary amendments made to the Safety Management Plan to ensure it remains valid. All updates to the SMP will be communicated to all relevant stakeholders as part of the CAF quality management system.

1.5. GLOSSARY / ABBREVIATIONS

The following abbreviotions and definitions apply specifically to this documentation, although they may have other meanings in another context. Some terms are defined specifically in the body of the document.

Term	Definition
ALARP	The principle that no risk within the tolerability region can be accepted unless reduced As Low As Reasonably Practicable.
Risk	Is the combination of severity of harm with the likelihood of it happening.
Severity	A measure of harm done or loss. Describes how serious consequences are.
Incident	An unplanned, uncontrolled event which, under different circumstances, could have resulted in an accident
Accident	An unplanned, uncontrolled event giving rise to death, injury, occupational ill health or other loss.
Quantified Risk Assessment	Identifying the hazards which are present, making numerical estimates of their frequencies and consequences, and combining them into overall measures or individual societal risk.

Use or disclosure of the proposal data is subject to the restrictions noted on the title page of this proposal

USB00000086_0126

Term	Definition
Qualitative risk assessment	Subjective judgement is used to assess the degree of relative importance of each risk.
Safety	The freedom from unacceptable risks of personal harm; i.e. the avoidance of accident or incident.
Shadow running	The weeks of running to the timetable pattern to gain confidence that the tramway can enter public service.
Test running	Takes place from the point where the system or part thereof is commissioned until such time as confidence is gained that it can enter shadow running
Abbreviation	**Definition**
ALARP	As Low As Reasonably Practicable
CAF	Construcciones y Auxiliar de Ferrocarriles, S.A.
DDCS	Design Case for Safety
EMC	Electromagnetic Compatibility
FEA	Finite Element Analysis
FMECA	Failure Modes Effects and Criticality Analysis
FRACAS	Failure Reporting and Corrective Action System
HazID	Hazard Identification (study)
HazOP	Hazard and Operability (study)
HCOS	Handover Case for Safety
HMRI	Her Majesty's Railway Inspectorate
IGBT	Insulated Gate Bipolar Transistor
LRV	Light Rail Vehicle
PDCS	Preliminary Design Case for Safety
POCS	Pre-Operational Case for Safety
PRM	Persons of Reduced Mobility
PSCC	Project Safety Certification Committee
OCS	Operational Case for Safety
ORR	Office of the Rail Regulator
OSHA	Operational and Support Hazard Analysis
RAM	Reliability Availability Maintainability
ROGS	Railway and Other Guided Transport Systems
RSPG	Rail Safety Principles and Guidance
SDS	System Design Service
SMP	Safety Management Plan
SSMP	System Safety Management Plan
VVVF	Variable Voltage Variable Frequency

Use or disclosure of the proposal data is subject to the restrictions noted on the title page of this proposal

USB00000086_0127

2. PROJECT DESCRIPTION

2.1. INTRODUCTION

The vehicle proposed by CAF for the Edinburgh Tram is an autonomous, bidirectional, double-cab articulated 100% low-floor LRV. It is part of the family of standard, modular-designed trams produced by CAF and in operation in many European cities. The proposed vehicle benefits from technology that is proven in-service in these previous applications.

Main characteristics of the tram are:

- International gauge
- 100% Low Floor
- Capacity of 250 (4p/m^2) passengers with 78 (31.2%) seated passengers.
- 2 wheelchair spaces
- Approx. 10.2 m^2 of floor surface for luggage racks.
- 7 articulated modules with total length of 42.3 metres and maximum width of 2,650 metres
- Supported on 4 bogies: 3 motor, 1 trailer
- 6 doors per side for the ease af passenger boarding.
- Self supporting low alloy steel carbody structures; high elastic limit (Corten) structure in the underframe and ferritic stainless steel on the sides and roof (easy to repair).

The tram has been designed with a robust structure, which will give the tram a service life of more than thirty years. Moreover, the materials used enable easy reparability of the trams: the repair and welding methods will be equivalent to those used in buses.

The tram consists of seven modules:

- Two end modules, each with a cab, supported on a motor bogie, with a single leaf access vestibule, and articulated on the intermediate carbodies.
- Two central modules on the ends of which the intermediate carbodies are supported. One of these central modules, on which a pantograph is located, is supported by a trailer bogie and the other central module is supported on a motar bogie.
- Three intermediate modules, suspended between the end carbodies and the central carbodies, where the double leaf access vestibules are located.

The tram's general architecture is ready to modify the number of its modules with minor works. The interior layout of the proposed tram is modular in design so that the number and position of the luggage racks can be modified easily any time, changing them by a 3 module seat assembly.

The floor is at a height of 350 mm along the passenger saloon. There are no ramps at the entrances.

The cabs are located at the end carbodies and they extend across the whole width of the carbody.

Use or disclosure of the proposal data is subject to the restrictions noted on the title page of this proposal

USB00000086_0128

The central carbodies have an area designated for 2 persons with disabilities. Persons with reduced mobility (PRM) can access this area via the 4 double leaf doors of the carbody. To this end, the access doors of this car shall be fitted with an exterior PRM access indicator.

The unit is not equipped with specific items to aid PRM access as the recommended access from the platforms is easy, thanks to the low floor level. All the disabled access requirements are met by the offered tram.

2.2. EDINBURGH TRAM

The Safety Management activities described in this plan applies to the integration of the Tram to the Network. The following section provides a description the main systems.

2.2.1. Bogies and suspension

The vehicle is supported on four bogies, three of which are motorised. The motor bogies have four motors, which are assembled with their shafts longitudinally, each of which is firmly attached to the gear unit cases to form one single assembly. This gear-motor assembly is completely suspended from the bogie frame, with a number of interspaced rubber elastic components.

Each motor drives a gear unit, which transmits traction torque to the wheel axle via a toothed coupling, allowing for movement caused by the strokes of the primary suspension. A resilient star type coupling is mounted between the motor and the gear unit.

The primary suspension is based on bell-type rubber and steel components which also steer the axles over the horizontal plane. The secondary suspension consists of coil springs, together with progressive elastic components at the end of the stroke. Damping is carried out externally by hydraulic dampers in parallel with the springs.

Carbody support on the bogies is directly via the 4 coil springs of the secondary suspension which are mounted directly above the bogie frame. Traction and braking efforts are transmitted via two drag links.

The main characteristics of the bogies are as follows:

Wheel diameter (new/used).....590/510 mm

Wheelbase.....1800 mm.

Primary suspension ..... Rubber-steel

Secondary suspension .....Coil springs

Type of brake .....Disk

Number of disks per bogie.....4

Use or disclosure of the proposal data is subject to the restrictions noted on the title page of this proposal

USB00000086_0129

Brake actuation:..... Hydraulically-operated floating clamp with accumulator spring

Electromagnetic rail shoes, per bogie.....2

Maximum Speed ..... 70 Km/h.

2.2.2. Carbodies and interiors

The carbody has been designed to meet the transport requirements in the technical fields of operation and aesthetics. The carbody is designed to provide adequate protection to the passengers should an accident occur. This is especially the case for driving personnel should there be a head on collision with another train or road vehicle and also specific protection by means of a barrier should a person be run over. Both carbody ends have fibreglass-reinforced polyester body-ends with a metal shell to protect the driver in the event of an accident.

Regarding the interior arrangement and decoration, solutions have been found to maximise the interior comfort based on accessibility, ergonomics, visibility, comfort and safety criteria. Also, a pleasant environment has been developed using warm tones and ample lighting. The interior decoration is functional and is mainly moulded fibre glass reinforced phenolic resins.

As well as maximising passenger comfort, an objective of the interior design has been reduced maintenance and cleaning times. To reduce these times the design has focused on simplicity of assembly and accessibility to all vehicle items. In this way, all areas which were difficult to access or that could lead to the accumulation of debris or dirt were removed.

The general dimensions of the proposed vehicle are the following ones:

Maximum length over carbody structure.....42.7m

Maximum width of LRV.....2.65m

Saloon low floor height above rail level 350mm

Passenger Door clearance height 2028mm

Double Passenger door width (free opening) 1300mm

Single Passenger door width (free opening).....800mm

Seat Width per passenger .....min. 450mm

Interior Headroom.....2183mm

Gangway width .....min. 650mm

LRV under-floor clearance, from top to rail,

Fully laden with fully worn wheels..... 50mm (bogie area)

Use or disclosure of the proposal data is subject to the restrictions noted on the title page of this proposal

USB00000086_0130

2.2.3. Passenger access doors

The passenger door leaves are produced as an aluminium sandwich construction. The frame is aluminium with a honeycombed core of the same material. The leaf is edged with EPDM rubber sections, to provide adequate leaf water tightness. The front edge of the leaf has a special hollow EPDM rubber section to protect trapped abstacles. The rigidity or hardness of this section shall be such that an optimum compromise between the detection of obstacles with minimum dimensions and effort to remove a trapped obstacle in the shortest passible time). The windows in the doors are fitted with 5 mm thick hardened glass.

The doors are equipped with internal and external buttons with an indicator (4 green LEDs) which allows the passenger to open the doors once the enabled signal is activated.

The door leaf is flush with the exterior surface of the vehicle once completely closed. On opening, the leaves perform a combined lateral and longitudinal movement to slide along the side of the carbody to the fully open position.

Double Leaf Dimension:

Opening width: ..... 1,550 mm

Opening height: ..... 2,230 mm

Horizontal clear width ..... 1,300 mm

Vertical clear height ..... approx. 2,030 mm

Single Leaf Dimension:

Opening width: ..... 990 mm

Opening height: ..... 2,230 mm

Horizontal clear width ..... 800 mm

Vertical clear height ..... approx. 2,030 mm

Other characteristics:

Opening/closing time: ..... 3 sec. (+0.5/-0)

Temperature: ..... 25°C - +70 °C

Voltage range: ..... 16.8 ÷ 31.2 V

Humidity: ..... up to 95 %

Maximum and minimum clearances that will show green/no green to the conductor:

Use or disclosure of the proposal data is subject to the restrictions noted on the title page of this proposal

Closed ..... 0-5 mm

Open ..... > 10 mm

Adjustment ..... 5-10 mm

Number of re-openings when an obstacle is detected* 2
*(Value to be defined by tie.)

2.2.4. Communication equipment

Passenger Destination Information System

The Passenger Destination Information System operates based on line data, location of the train along the route and door opening/closing signals, which are provided by other systems in the train.

The Announcement System contains the stations table and their location along the route for each of the lines along which the train is to operate. These tables include the kilometre points at which the next stop announcements are to be made.

The system has the following features:

- 2 front passenger information displays (PID)
- 4 side external PID on both sides of the tram (two per side).
- 8 internal PIDs.
- 20 internal loud speakers, 2 cab loud speakers and 2 noise sensors.
- 8 passenger intercoms.

General Passenger Information System

This is linked into the interior Destination Information System using the same PIDs. The broadcast of this general information is normally at the discretion of the driver and will comprise visual and audible information.

Passenger Safety Information System

This comprises:

- *Visual* information, notices etc. indicating the location of the passenger emergency communication devices, door open buttons, etc.
- *Audible* information transmitted via the public address system by the driver and/or the CCR personnel.
- *Tactile* information on the doors to assist visually impaired passengers in manually locating the door open buttons from the inside and from the outside of the LRV.

Use or disclosure of the proposal data is subject to the restrictions noted on the title page of this proposal

USB00000086_0132

2.2.5. Friction brake equipment

The braking system consists of 1 disk per wheel, which is attached to the wheel. In the event of an emergency, two electromagnetic rail brakes are used on each bogie. The brake operation is electro-hydraulic and accumulator spring.

The proposed braking system operates with an inverse type activation (with spring load) on all bogies. When no pressure is supplied, the stable condition of the floating inverse actuator causes the application of a maximum braking effort.

In the motor bogie the TCU (traction control unit) controls the friction brakes according to the brake demands and also controls the wheel slide protection. The friction is controlled by the TCU via the autonomous HVI card. The TCU substitutes the regenerative electrodynamic brake with the friction brake. The TCU also has the function of ensuring that the brake is applied or released, the appropriate pressure in the callipers is consistent (control of the pressure switch signal and diagnostic). Only the full service brake is under the direct control of the vehicle via fixed wiring.

In the trailer bogie, the BCU (Complete SW Electronics) controls the friction brakes (hydraulic brakes) in accordance with the brake demands and the vehicle's condition and load. If necessary, the trailer bogie friction brake can substitute part of the regenerative electrodynamic brake at low speed (below the substitution speed). The BCU controls wheel slide and the brake diagnostics. Only the emergency brake is under the direct control of the vehicle via fixed wiring.

2.2.6. Heating, Ventilation and Air Conditioning system

Cab

The tram is fitted with one air conditioning unit per cab. The air conditioning unit is compact, divided on the inside in a compressor-condenser area, which contains a compressor and a condenser coil, and an evaporator area, containing an evaporator coil, electric heating elements and an impeller fan. Temperature measuring probes are also located inside for the return air and impelled air.

Passenger Saloon

The passenger saloon is fitted with 3 heating and ventilation units. They are controlled by means of an electronic rack. The proposed HV system has the following essential characteristics:

- Secure and reliable performance
- Service proven components
- Minimum weight commensurate with robust construction
- High efficiency
- Microprocessor based controls
- Efficient thermal and acoustic insulation

The heating and ventilation system ensures that sufficient fresh air is fed into the LRV, in addition to the recirculation of air. It is possible for the driver to de-activate the heating and ventilation system. The HV system offered is based on a range of similar systems that CAF has supplied to the railway industry over a number of years.

Use or disclosure of the proposal data is subject to the restrictions noted on the title page of this proposal

2.2.7. Couplers

The tram is provided with a permanently fitted "Albert" type coupler. This coupler is easily manoeuvrable and is designed such that it will perform as required on the worst combination of horizontal and vertical curves on the system.

For electrical connection between the units, an electrical hose with connectors at both ends is assembled between the two front sections separate from the couplers, and this provides continuity for the signal circuits required for control.

The coupler has a draft bar equipped with an articulation which allows the bar to bend and hide itself or stow the automatic coupler below the carbody when it is not in use.

2.2.8. Traction equipment

The system has three independent traction units and each contains the traction inverter, the brake resistors and four traction motors. Each traction inverter is double, with each module controlling 2 motors.

The two level inverters, directly connected to the catenary, are based on the latest generation of IGBT power transistors. These are specifically used to obtain the best rail traction performance.

The four motors of each motor bogie are fully suspended and mounted with their shafts arranged lengthways to the track. Each of the motors is bolted to its corresponding gear unit, thus forming a rigid assembly.

The system is designed to assure the required functionality and to obtain the highest reliability, availability, maintainability and safety performances.

2.2.9. Auxiliary converter

Each tram will be fitted with 2 auxiliary converters, powered at 750 Vdc, to supply the 3x400Vac line.

The proposed auxiliary converters are based upon the use of the latest generation of IGBTs with a variable voltage and frequency inverter (VVVF).

The 24 Vdc direct current loads are supplied from the battery charger, which shall also perform the controlled charging of the battery.

2.2.10. Battery

Each tram is equipped with a nickel-cadmium type battery capable of supplying the necessary circuits of the vehicle. The nominal capacity of the battery is 180 Ah and consists of 19 nickel-cadmium cells connected in series and grouped in blocks of 4 and 5 cells.

The vehicle's nominal voltage is 24 V which is normal for these types of vehicles. The range of voltages shall be 24 V-30%, +25% (16.8 V-30V) in accordance with standard EN 50155.

Use or disclosure of the proposal data is subject to the restrictions noted on the title page of this proposal

USB00000086_0134

3. SAFETY POLICY AND CRITERIA

3.1. CAF SAFETY POLICY

As part of a rigorous process of safety assurance, CAF's strategy for the development of the staged "Case for Safety" is to ensure that the potential for the Tram or any of its systems and equipment, entering the operational phase with unacceptable safety characteristics is minimised. The primary purpose of the safety assurance process is to maximise the visibility of the hazard identification process, and the defensive safety characteristics of the Tram and associated systems, at each stage of the project.

This will be achieved through selected safety assessments and verification activities being 'integrated' with all other design engineering parameter development; that is, the integration of Performance, Reliability, Availability and Maintainability (RAM), Fire Safety, and Electromagnetic Capability (EMC) into the overall project development pragram.

CAF safety policy establishes the following key hazard management rules:

- Safety shall take precedence over all other performance characteristics.
- Avoid hazards by use of proven design and redundant or fail-safe components.
- Avoid or mitigate cansequences af identified hazards by the use of appropriate design or material.
- Manage hazards arising from extraordinary environmental conditions and through errors in operation or maintenance.
- Ensure that safety requirements are included in the engineering requirements management documentation and demonstrated as achieved.
- Ensure that operation and maintenance control measures are reasonable and communicated to the responsible bodies.
- Ensure that later changes or modifications that are within the scope of CAF are assessed to ensure that they do nat lead to a reduction in safety

3.1.1. Safety Strategy

CAF designs and delivers Products that meet the contractual safety requirements and applicable national laws, rules and regulations. CAF is committed to actively supporting the implementation of its safety policy throughaut its areas of responsibility. Endorsement of the Product Safety Palicy is essential to preserve the confidence af customers, retain their business, and compete successfully in the marketplace. CAF, for each project:

- Defines product safety requirements based on applicable laws and regulatians in each particular country and based on requirements of the customer, regulators and other legitimate third parties.
- Ensures that safety requirements are fulfilled during the development and delivery of products, including compliance demonstration.
- Pro-actively analyses incidents and accidents to review the safety performance of its products.
- Continually reviews its safety management process and procedures.

Use or disclosure of the proposal data is subject to the restrictions noted on the title page of this proposal

3.1.2. CAF Rolling Stock Safety Principles

The overriding principle for the design of safe rolling stock is:

- ***Develop, provide and maintain products that are safe for their intended use.***

The people covered within the understanding of "intended use" are:

- Tramway passengers and crew.
- People, property and machinery adjacent to the tram.
- People on or around the tram during maintenance.
- People with no intentional interaction with the tramway.

Having identified the people to be protected by this safety principle, the potential mechanisms for putting them at risk have been assessed and defined according to the following initial list of generic rolling stock hazards, as follows:

- Asphyxiation.
- Burns (typically caused by exposure to hot surfaces or substances, as distinct from fires).
- Exposure to biological hazards.
- Exposure to chemicals.
- Collision (of the vehicle).
- Crush.
- Cut.
- Derailment.
- Fall.
- Fire.
- Electrocution.
- Impact (people hitting walls, equipment, etc. or equipment falling onto people, usually as a result of rapid acceleration or deceleration).
- Medical equipment incompatibility.

3.1.3. Safety Criteria

The safety criteria will be defined and maintained in the design and development of the Edinburgh Tram. This will include the management of hazards and associated safety requirements by demonstrating compliance with the following:

- An agreed listing of Engineering Standards, Codes of Practice and Technical Specifications.
- Office of Rail Regulation (ORR) Railway Safety Principles and Guidance [Ref. 4].
- Risk Criteria & Probabilistic Failure Rates.

Use or disclosure of the proposal data is subject to the restrictions noted on the title page of this proposal

3.1.4. Safety Training

The CAF Project Manager is responsible for ensuring that all personnel who have responsibility for system and safety engineering activities within the project lifecycle discharge those responsibilities. The safety training and competence requirements are identified as part of the start up engineering activities for any new project. CAF can confirm that it has resourced a safety management and engineering team to deliver the safety requirements and associated "Case for Safety" documentation. This is discussed in more detail within Section 4.

3.1.5. Statement of Commitment

The CAF Project Manager will ensure appropriate funds and campetent resources are made available to implement the Edinburgh Tram safety requirements. Appropriate consultation will be maintained with all stakehalders (thraugh the SAM) in respect to:

- Tram design, build, testing, operation and maintenance consideratians.
- Impacts an all near neighbours.
- Operational and Maintenance Authority dialogue and agreements.
- Gaining Safety Approvals.

Use or disclosure of the proposal data is subject to the restrictions noted on the title page of this proposal

USB00000086_0137

4. SYSTEM SAFETY MANAGEMENT AND ORGANISATION

This plan describes the framework that will ensure that the management of Tram safety within the overall Edinburgh Tram Network Project. CAF will implement the requirements and guidance of the Edinburgh Tram Network SSMP [Ref. 1] which requires the Project to be in compliance with international best practice and applicable, current standards and procedures.

Note: The UK Safety Approvals Regulations changed during 2006. Safety Approvals of the Edinburgh Tram Project will be governed by the Railway and Other Guided Transport Systems (Safety) Regulations (ROGS) 2006 [Ref. 5]. CAF anticipate that this change will require the Edinburgh Tram Network SSMP to be amended to reflect the changes in European Safety Regulations. CAF understands this and is committed to working with all stakeholders to provide the demonstration of acceptable risk required by the UK Safety Authority.

4.1. TRAM SAFETY MANAGEMENT SYSTEM

The CAF Tram safety management system and engineering process will ensure, and demonstrate, that all systems will operate within tolerable/acceptable levels of risk to passengers, public and staff when integrated into the Edinburgh Tramway Network. The process will include a safety requirements capture stage which is an integral part of the CAF system engineering process. CAF acknowledge the requirement to consider the safety of those engaged in using, interfacing with and operating the Tramway including road users and pedestrians on the tram route.

During the initial stages of the Tram development the focus of activities will be to identify hazards and the safety requirements that are needed to control the risks to acceptable levels. The Tram Safety Management Plan will be updated to reflect the output of these studies

During the preliminary design phase the focus of the safety management system activities is to ensure that those systems and equipments critical to safety have the potential to control the risks to tolerable and ALARP levels. A summary of these activities will be reported in the Tram Preliminary Design Case for Safety.

During the detailed design phases the focus of the system safety management activities is that of verification. Verification is defined as ensuring that the design meets the defined safety targets/requirements. A summary of these activities will be reported in the Tram Detailed Design Case for Safety.

A series of unit and system validation and verification activities will be undertaken after which the DDCS will be updated to demonstrate that risks of on-track testing have been adequately controlled to permit track testing and commissioning to be commenced.

Following this, testing and commissioning will be carried out. During this phase verification evidence and analysis will be presented to demonstrate that the commissioned tram meets the defined safety targets/requirements and that the system as commissioned is safe and fit for purpose. CAF will prepare a Handover Case for Safety in support of Shadow and Revenue Running.

Use or disclosure of the proposal data is subject to the restrictions noted on the title page of this proposal

USB00000086_0138

The diagram below indicates the CAF Safety Management System outputs and deliverables which have been aligned to those defined in the Edinburgh Tram network SSMP.

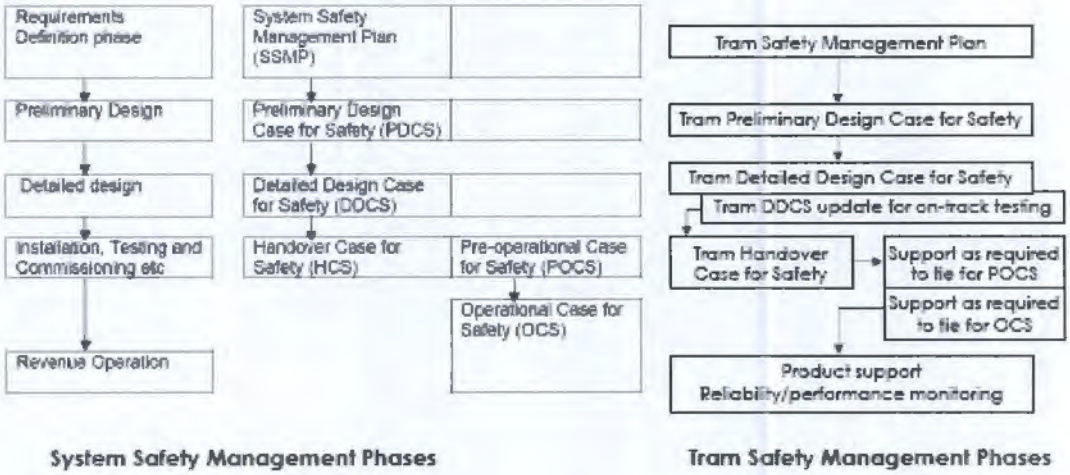

In terms of Tram safety the main philosophy is that the hazards will initially be identified by a series of "Top Down" and "Bottom Up" hazard identification studies organised by CAF Safety Manager. The Top Down hazard identification study will build on the work done during the Tender stage and will convened to include key stakeholders in the Edinburgh Tram Network. The CAF strategy for reducing the risks of each hazard to an acceptable level will be produced, agreed with the Project and implemented. The progress in identifying and closing out Tram hazards will be recorded in a CAF Tram Hazard Log. This process will be pro-active and will ensure that hazards are identified early and, wherever possible, eliminated or mitigated at an early stage of design such that the residual risks requiring to be managed during operation are minimised.

4.2. MANAGEMENT ORGANISATION AND RESPONSIBILITIES

4.2.1. Introduction

The Edinburgh Tram Network SSMP, in implementation, requires an integrated approach with those responsible for the Infrastructure, Operations and CAF working together to identify and control the risks. CAF acknowledges its responsibility, in conjunction with other stakeholders, to ensure that the delivered Tram gains the necessary approvals to operate in trial and passenger service. Further, CAF acknowledges its responsibility to support the Project by preparing and submitting staged Tram Case for Safety Submissions that will support the overall safety case.

4.2.2. UK Approvals Requirements and Responsibilities

The UK Approvals process will require objective evidence in a suite of safety justification documents that demonstrate compliance with the UK Approvals requirements. CAF is aware that the European and UK Regulatory requirements has been subject to significant "change" as the legislation and requirements of the European Railway Safety Directive (RSD) have been implemented. CAF will support this requirement by ensuring that the engineering assurance documentation is robust and produced in a timely manner to support the staged Approvals applications. As required by the Project,

Use or disclosure of the proposal data is subject to the restrictions noted on the title page of this proposal

USB00000086_0139

CAF will ensure that the activities required by this plan are documented within a series of Cases for Safety that will be staged and provide the progressive demonstration that the engineering safety risks associated with the design, build and test are such that the defined safety targets are complied with. The remainder of this section provides an overview of the requirements and the roles and responsibilities of the various stakeholders within the UK approvals process.

4.2.3. Office of Rail Regulation (ORR)

Responsibility for the regulation of health and safety on the railways has been transferred from the Health and Safety Commission (HSC) and the Health and Safety Executive to the Office of Rail Regulation (ORR). Implementation of the European Railway Safety Directive has resulted in the introduction of the ROGS. It is understood that HMRI, as the Safety Authority, will give authorisation for the introduction of the Tram Network based on submissions made by the Project. In essence, this will be the final validation that the Edinburgh Tram Network, including the new rolling stock, has been independently assessed and shown to meet the requirements of the ROGS [Ref.5].

4.2.4. Near Neighbours

CAF acknowledge its responsibility to support the Project gain safety approvals from the following organisations:

- Network Rail.
- British Airports Authority.
- City of Edinburgh Roads Department.

4.2.5. SDS Edinburgh Tram Network Team

The SDS Edinburgh Tramway Network Team will be responsible for managing the design and commissioning of the tramway, to ensure it is demonstrated as acceptably safe. The SDS Project Team will be responsible for working with the System Assurance Manager to identify and mitigate unacceptable hazards. The SDS Project Team is also responsible for providing assistance to the SDS Systems Assurance Manager in the preparation of each Case for Safety. The SDS Project Team, led by the Delivery Manager, with support from the System Assurance Manager, forms the Edinburgh Tramway Network system integrator. The roles and responsibilities of the SDS Project Team, the Operator and the Infraco, as they relate to safety, are described in detail within the Edinburgh Tram Network SSMP.

4.2.6. Construcciones y Auxiliar de Ferrocarriles, SA (CAF)

CAF acknowledges its responsibility to provide the Edinburgh Tram Network Project with the assurance that the delivered Tram complies with the defined requirements and to assist in the demonstration that it is safe to enter service. CAF has put in place a multi-disciplined management and engineering project team that has the necessary competence and skills required to design, build and support the test, commission and running phase of the project. CAF management ensure that the safety teams have the required degree of autonomy to ensure that conflicting commercial issues do not compromise safety. The CAF Project team, which will remain in place for the complete procurement, will:

Use or disclosure of the proposal data is subject to the restrictions noted on the title page of this proposal

USB00000086_0140

- Influence the design of the Tram by ensuring that full consideration is given to hazard identification and safety requirements management.
- In conjunction with the system engineers, provide documented verification/validation to demonstrate that the safety requirements have been achieved. The safety assessments will form key documents within the safety case submissions.
- Ensure, in conjunction with SDS, that the correct blend of design, operational and maintenance control measures are in place to provide the assurance of safety though the rolling stock life cycle.

Further, for this prestigious project CAF has retained AEGIS Engineering Systems Ltd to act as internal safety management consultant to CAF, providing guidance, advice and direction to CAF on the process to be followed in achieving the safety targets for the project and in producing and presenting the staged Case for Safety.

CAF, as the Tram provider, acknowledges its responsibility to provide the assurance that the rolling stock is demonstrably safe. This will be achieved by implementing a robust safety management system that is proven in application and takes full account of the proposed operations. The Project Safety Management Organisation is described below.

4.2.6.1 Project Manager

The Project Manager has full executive authority on behalf of CAF to manage the Project as a whole, and to direct the sequence and timing of all activities undertaken by all personnel. The CAF Project Manager is responsible for all aspects of the contract, including the safe outcome of the Project. The Project Manager is accountable for the execution of the contract within project profitability, time scale and resource deployment targets and to the Client for deliverables specified within time, quality, safety and cost requirements. Specific safety related responsibilities are:

- Ensure all members of the CAF Project Team discharge their safety responsibilities effectively.
- Communicate and liaise with relevant parties and CAF Suppliers on project matters, including safety issues.
- Ensuring that sufficient resources are planned and available for safety.
- Appoint competent and experienced individuals for safety related roles.
- Ensure that the CAF safety, quality and environmental policies are aligned, implemented and followed.
- Ensure effective safety management systems are put in place for all phases of the Project.

4.2.6.2 Safety Manager

The Tram Safety Manager is responsible for:

- CAF representative (if so requested) at the Edinburgh Tram Project Safety Certification Committee (PSCC).
- Production and maintenance of the Safety Management Plan and ensuring effective implementation of the mandated activities for the design, build, test and operational phases.
- Co-ordinating all activities related to safety carried out by other members of the CAF Project Team, including but not limited to Hazards Analyses and FMECA;

Use or disclosure of the proposal data is subject to the restrictions noted on the title page of this proposal

- To identify and define the safety requirements for the Tram and ensure compliance.
- The identification and/or provision of the proper tools for Safety related activities.
- Facilitating the top down hazard identification studies and arranging suitable operator maintainer and engineering representation.
- Ensuring accurate documentation provides the results of all safety related activities.
- To manage the safety activities and analyses required to demonstrate that safety requirements have been addressed.
- Production and management of the CAF Tram Hazard Log.
- Managing the production of the staged Tram Case for safety Submissians.

4.2.6.3 Quality Assurance Management

The Quality Manager is responsible to the Project Manager for deriving and implementing the CAF Quality Management System. A Project specific Quality Assurance Plan will be the controlling document that will describes the process controls associated with the design and production of the vehicles. The CAF Quality Management System is compliant with ISO 9001 – 2000. The Quality Manager is responsible for:

- Maintaining the CAF Quality Management System.
- Ensuring the quality assurance process for the CAF Tram Project is defined and implemented.
- Ensuring the surveillance and auditing processes and procedures are implemented effectively.
- Verifying that the assurance activities have been carried out and assurance submissions are complete.

An integral component of safety assurance is effective control of the process by which designs with high inherent safety, are converted into finished products with the same level of safety. To ensure that the controls for manufacturing meet the system safety requirements, CAF will place interface emphasis an the following areas of cantrol:

- Safety engineering will define the safety critical elements and Quality Assurance will review and approve it.
- Quality Assurance will establish controls for production variables and human errors that can introduce hazard conditions.
- Quality Assurance will review materials and process specifications for adequacy.
- Quality Assurance will provide support to Supplier evaluations, selections, establishment of supplier manufacturing and quality control requirements, as well as monitoring of supplier production progress.
- Quality Assurance will monitor non-destructive and destructive test results to verify that items comply with the engineering requirements.
- All in-house production operations, including subsystem installation and functional testing, will report all operating and hazardous conditions to the Quality Assurance Dept.

4.2.6.4 Supplier Management

It is CAF policy to develop a close working relationship with a relatively small group of selected suppliers / sub-contractors that have proven their ability to provide safe and

Use or disclosure of the proposal data is subject to the restrictions noted on the title page of this proposal

USB00000086_0142

reliable systems, equipment and materials. Suppliers of rolling stock systems and equipment are reputable specialists in their respective fields, with substantial experience in railway vehicle applications. The CAF Safety Management Systems, where these cover procurement of systems and equipment, include a contractual requirement for all major system suppliers and their associated sub-contractors to provide a demonstration of product safety and quality.

Use or disclosure of the proposal data is subject to the restrictions noted on the title page of this proposal

5. SYSTEM ENGINEERING AND SAFETY ASSURANCE PROCESS

5.1. INTRODUCTION

CAF utilise a concurrent system engineering process compliant with EN 50126 [Ref. 2] to ensure that all requirements associated with new rolling stock are correctly identified and managed. The process of requirements capture, identification of justification arguments and associated verification activities is proven in application in previous successful rolling stock design and deliver projects.

This section of the Tram Safety Management Plan provides a summary of the safety engineering activities that, concurrent to the other system engineering and assurance activities are carried out to ensure that the safety risks associated with the design and development of the Edinburgh Tram are identified and controlled.

5.2. PRELIMINARY SAFETY ACTIVITIES

CAF acknowledges that the initial phase of any procurement is critical in terms of identifying all potential hazards associated with the scope of change and ensuring robust design engineering solutions and operational and maintenance procedures are put in place. The remainder of this Section of the SMP provides detail of the activities that are currently being implemented and a summary of the safety controls that will be in place during the later stages of the procurement.

5.3. HAZARD LOG REVIEW

The SDS Project Team is responsible for ensuring the demonstration of safety for the overall Edinburgh Tram Network is complete and timely. SDS has generated the SDS Hazard Log [Ref. 6] to provide the record for all system elements that form the Tram Network. CAF can confirm that it will align the Tram Hazard Log to the structure of the SDS Hazard Lag.

As a result of the activities described above the CAF Safety Manager will be in a position to generate the Edinburgh Tram Hazard Log. The Log will be the "Live" register of the rolling stock design hazards that have been identified and must be mitigated within the (design) cases for safety. Operational and Maintenance control measures will be passed to the appropriate body for management action and close out in support of the Pre-operational and Operational Case for Safety. The log will identify the proposed close out control measures (safety requirements) needed to eliminate or reduce the severity or likelihood of the hazard to accepted levels. A summary of the status of the Hazard Log will be made at key stages in support of the Tram Case for Safety submissions.

CAF safety management process is based on the guidelines within EN 50126 and is being aligned to meet the specific requirements of the Edinburgh Tram Network SSMP. The process encompasses the whole product lifecycle from the first concept phase to the modification and retrofit. The figure in the following section depicts the system lifecycle phases for the Edinburgh Tram application.

Use or disclosure of the proposal data is subject to the restrictions noted on the title page of this proposal

USB00000086_0144

5.3.1. Engineering System- Lifecycle Phases

The project safety engineering "V" lifecycle which will be followed in the Edinburgh Tram project is shown in the graphic below. The graphic illustrates how the phased submissions of the Case for Safety are integrated with the CAF engineering lifecycle. The activities to be carried out within this process are discussed in the following sections.

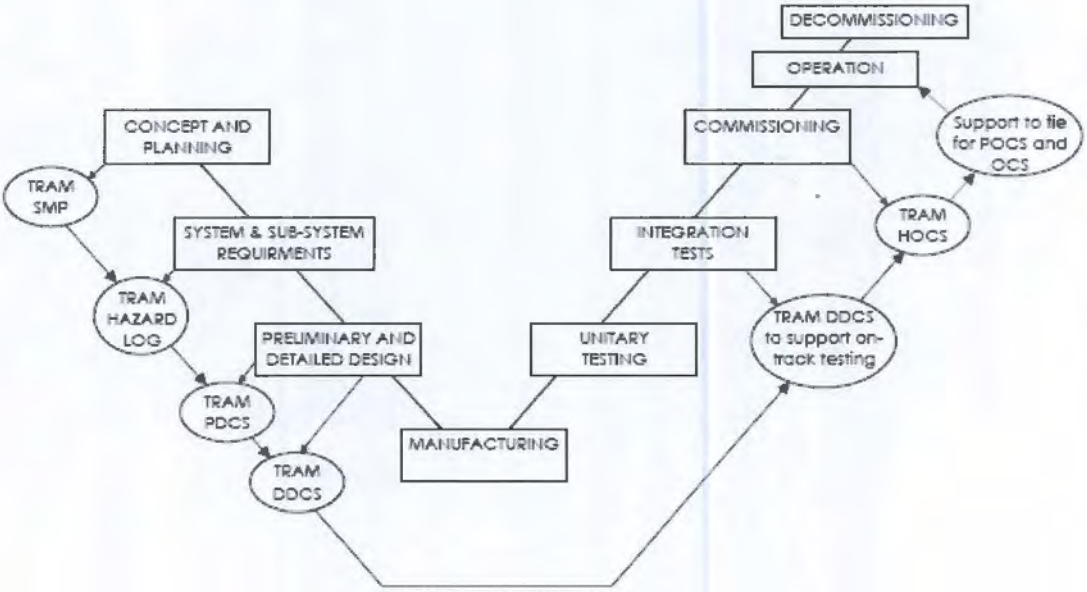

5.3.2. Phase 1: Concept and Planning

During this phase CAF develops an understanding of the overall Transport System requirements, environment and baundaries in sufficient detail to enable subsequent safety lifecycle tasks to be planned. It includes the following activities:

- Analysis of transport engineering requirements (safety and others).
- Gain a full understanding of the environment that the Tram is required to operate under.
- Define similorities with other CAF past projects. Review applicability of previous engineered system and associated safety studies.

A principal objective in this phase is to identify and document the safety strategy for the project, ensuring that the CAF safety management pracess is fully aligned to the Edinburgh Tram Network System Safety Management Plan [Ref. 1]. The main activities undertaken are:

Use or disclosure of the proposal data is subject to the restrictions noted on the title page of this proposal

USB00000086_0145

- Definition of the safety strategy, organisation, responsibilities and key safety deliverables for the Project. The safety strategy will be compliant with the guidance provided in RSPG part G "Guidance for Tramways" [Ref. 4]
- Undertake project specific Preliminary Hazard Analysis by review of the operational requirements and the Tram system concept design to identify the high risk drivers and proposed mitigation.
- Define hazard severity categories and hazard frequency categories or review those imposed by the Client specification.
- Define risk matrix and talerability criteria or review those imposed by the Client specification.
- Production of Project Safety Management Plan (this document).

During this phase a Tram level "Top Down" hazard identification study will be undertaken and will be documented within the Tram Hazard Log. The Hazard Lag already generated by the SDS [Ref. 6] will be reviewed and will farm a key input to this process. Thus, the main tasks of this phase will be:

- Top Down Hazard Identification Studies.
- Classification of associated safety risks and initial control measures.
- Generate and maintain the Tram Hazard Log.

Key safety assurance deliverables of this phase:

- Tram Safety Management Plan
- Tram Hazard Log

Use or disclosure of the proposal data is subject to the restrictions noted on the title page of this proposal

USB00000086_0146

5.3.3. Phase 2: System and Sub-System Requirements

The objective of this phase is to define the system functional and safety requirements at the Tram and the systems and equipment level. The key activities to be carried out are:

- System functional analyses will be carried out using Functional Failures Analysis and HazOP/HazID studies as appropriate; hazards identified by these analyses will be added to the Tram Hazard Log established in the previous phase.
- Define system and safety engineering requirements. Inputs to this will come from:
  - Client Technical Specification and Engineering Standards
  - Results of the Hazard Identification and Risk Assessment process.
  - Requirements of the Rail Vehicle Accessibility Regulations.

The issued criteria (Edinburgh Tram Network SSMP) for definition of risk (frequency and severity leading to tolerability category) will be applied to hazards identified and recorded in the Tram Hazard Log. These criteria are reproduced in Section 6.3 below.

A further task in this phase is the apportionment of system functional and safety requirements to the sub-system and equipment level. The outcomes of this task will be

During this phase, apportionment of the system and safety requirements to subsystem level is carried out. Thus, the phase will include:

- Functional requirements allocated to designated sub-systems.
- Safety requirements, with required integrity, allocated to designated sub-systems.

The results of this work will be recorded in system and sub-system requirement documents. Where external sub-suppliers are involved, the requirement for suitable hazard analysis, risk assessments, reduction and validation activities will be included in the supplier technical requirement documentation.

Key safety assurance deliverables of this phase:

- Updated Tram Hazard Log

5.3.4. Phase 3: Preliminary and Detailed Design

The primary objectives within this phase are:

- Create systems and sub-systems conforming to the defined safety requirements.
- Establish a complete and coherent set of system requirements documents which define the requirements for the tram and for its sub-systems and equipment.
- Provide verification through analysis that demonstrate that systems and sub-systems conform to the defined safety requirements

Use or disclosure of the proposal data is subject to the restrictions noted on the title page of this proposal

USB00000086_0147

To achieve these objectives the following activities will be carried out:

- Demonstration of compliance with agreed engineering standards and codes of practice.
- Design substantiation analysis to provide the verification that the safety requirements have been met. The analysis will be tailored and applicable examples are Finite Element Analysis (FEA), Failure Modes and Effects Analysis (FMEA), Fault Tree Analysis.
- Summary Safety Reports. The Safety Reports will provide the objective evidence that the hazards and associated safety risks have been controlled by the engineered systems.

A specific safety assurance task of this phase is the production of the Preliminary Design Case for Safety (PDCS). This document will provide the demonstration that the risks associated with the design, implementation and operation of the tram have been identified and that the design, at a preliminary stage, has defined requirements that in implementation will manage these risks.

In accordance with the SSMP [Ref. 1], the PDCS will:

- Review the safety assurance activities conducted up to this phase of the project
- Provide a summary of the latest version of Tram Hazard Log, demonstrating that individual hazards have adequate, if ongoing, plans for their control and mitigation.
- Identify any specific additional actions that will be required within the detailed design and later phases to ensure adequate control of safety risks.
- Provide a clause-by-clause response to the RSPD part G [Ref. 4].
- Provide a clause-by-clause response to the RVAR guidelines [Ref. 7].

Key safety assurance deliverables of this phase:

- Tram Preliminary Design Case for Safety

5.3.5. Phase 4: Release to Manufacturing

A key element of this phase will be the production of the Tram Detailed Design Case for Safety (DDCS). This document will, in compliance with the requirement of the SSMP [Ref. 1], demonstrate that the Tram has been designed to be acceptably levels of safety risk.

The Tram DDCS will:

- Summarise the safety assurance activities conducted up to this phase of the project
- Demonstrate that the technical safety of the vehicle design has been assured by the design validation activities carried out in the detailed design phase.
- Provide a summary status of the Tram Hazard Log to demonstrate that hazards have been adequately controlled and mitigated to permit the vehicle to be manufactured and tested safely.
- Report the quality management processes to be employed during manufacturing phases.
- Detail the planned vehicle test and commissioning activities

Use or disclosure of the proposal data is subject to the restrictions noted on the title page of this proposal

USB00000086_0148

- Identify any specific operational controls required within the testing phases to ensure adequate control of safety risks

During this phase adequate control measures must be put in place to ensure that the manufactured systems and sub-systems meet the defined safety requirements. The following activities will be carried out:

- Identification of hazards associated to human factors including manufacturing, operation and maintenance by means of an Operation and Support Hazard Analysis (O&SHA).
- Definition of the safety related quality controls.
- Define safety related testing procedures
- Commence Failure Reporting and Corrective Action System (FRACAS).

The aim of this phase is to assemble and install the total combination of sub-systems and components required to form the Tram. The phase will also encompass the following activities:

- Establish and control the application of safety-related assembly and installation procedures.
- Define staff training documentation and procedures.

Key safety assurance deliverables of this phase:

- Detailed Design Case for Safety

5.3.6. Phases 5 and 6: Unitary and Integration Testing

The aim of these phases is to complete sub-system and vehicle tests to validate that the final product meets the defined safety requirements. Hence, the following activities are defined:

- Testing results and review for any impacts on Design Case for Safety.
- Update Tram Hazard Log and include closure arguments for all test-mitigated hazards
- Update of the Tram DDCS to support request for permission to begin on-track testing

5.3.7. Phase 7: Commissioning

The purpose of this stage is to assess compliance of the defined safety requirements and demonstrate the Tram as an engineered system is capable of entry into service. Thus, the following safety assurance tasks will be done:

- Assessment of the adequacy of the generated safety-related documentation.
- Assessment of the safety related testing results and verification that their results show system acceptability.
- Final risk assessment.
- Verify that the activities and studies defined in the Safety Management Plan have been satisfactorily carried out.

In this phase the Tram Handover Case for Safety will be produced. This document will be produced to support the SDS Handover Case for Safety and will:

Use or disclosure of the proposal data is subject to the restrictions noted on the title page of this proposal

USB00000086_0149

- Give a complete explanation of the safety assurance activities carried out in support of the demonstration of tolerable and ALARP levels of risk.
- Provide a summary of the Tram Hazard Management process and the status of the Hazard Log with all identified hazards, safety requirements and a reference to the close out arguments.
- Detail any remaining operational or maintenance related hazard mitigation actions, requiring acceptance by the operator or maintainer.
- Give a summary of the validation activities undertaken within the testing and commissioning phases.

Key safety assurance deliverables of this phase:

- Tram Handover Case for Safety (to support the SDS Handover Case for Safety)

5.3.8. Phases 8 and 9: Operation and Through Life Support

The safety objective of this phase will be to support the day to day operation of the tram (within specified limits) and to maintain and support the systems such that compliance with safety requirements is maintained. To support these objectives from a safety requirement the following will be implemented:

- Monitoring of vehicle performance through the collection and analysis of operational performance and safety data (FRACAS or DRACAS).
- Assessment of the adequacy of the information, data and other statistics produced.
- Assessment of any proposed design changes that in implementation could compromise the Design and/or Handover Cases for Safety.
- Verification that changes in operation or maintenance support arrangements remain consistent with Case for Safety.

One of the main aims of these tasks is to maintain confidence in the safety performance of the system, particularly where modifications to the system are made. Processes will be implemented to control system modifications and retrofit tasks to maintain system safety requirements. With that purpose, a procedure will be defined to implement system modifications, study their possible impact into safety and if so, modify safety documentation and reassess compliance with safety requirements. Hence those tasks will be carried out:

- Application of FRACAS for implementation of modifications
- Study of modification impact into safety
- Repeat risk assessment (if required)
- Update Safety Report or applicable safety documentation

Note: The EN 51026 standard defines an additional phase of 'Decommissioning and disposal'. This phase is not addressed in the present report since it is out of CAF's scope, other than in as much as it concerns compliance with current environmental legislation on materials employed in the Tram.

Use or disclosure of the proposal data is subject to the restrictions noted on the title page of this proposal

USB00000086_0150

6. HAZARD IDENTIFICATION AND RISK ASSESSMENT

6.1. INTRODUCTION

Hazard identification and risk assessment methods that will be used will utilise a combination of techniques that are suitable for the system and sub-system elements under consideration. The methods adopted will include the following steps:

- Systematic hazard identification process.
- An assessment of the risk involved.
- Identification of design, operational procedures and processes to manage the risks.
- Implementation of the control measures in the design and associated operational and maintenance procedures.
- Monitoring the performance of the new product during its operational life.

6.2. GENERIC PROCESS MAP

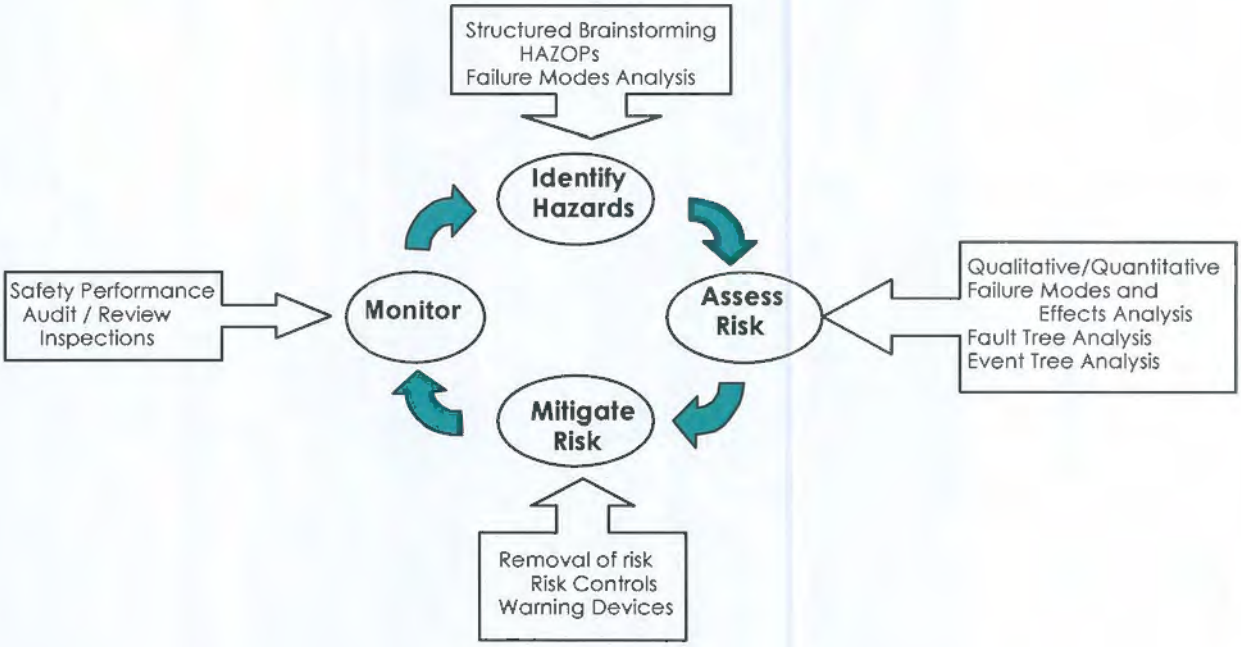

The remainder of this section provides detail of the methods that will be adopted in the identification of hazards and the risk assessment in support of the Edinburgh Tram Project.

Use or disclosure of the proposal data is subject to the restrictions noted on the title page of this proposal

USB00000086_0151

6.3. HAZARD IDENTFICATION AND RISK ASSESSMENT (HIRA)

6.3.1. Tramway Network Level HIRA

The Edinburgh Tram Network safety requirements capture process will include a series of engineering and operational reviews with all Stakeholders that are responsible for and can contribute to the Tram safety assurance process. CAF will contribute to these Network level studies by ensuring that they are supported by experienced rolling stock engineers that are aware of the interactions between the rolling stock and the operational railway. All identified hazards and safety risks that the rolling stock can contribute to or cause will be identified and, if credible, entered in the SDS Hazard Log and the Tram Hazard Log for management action and subsequent close out.

6.3.2. System and Sub-System Hazard Identification Studies

Concurrent to the preliminary and detailed design the CAF engineering teams and Suppliers will undertake System and Sub-System Hazard Identification and Analysis for their scope of responsibility. The outputs from these safety studies will be entered into the Tram Hazard Log for management action, monitoring and close out in support of the Tram Design and Handover Cases for Safety. Systems and equipment that are already operational in service and can be validated as proven in application will be shown to have a track record of safe operation in support of close out. New and modified systems will be subject to hazard and failures analysis to ensure that they do not introduce hazard and unacceptable levels of risk.

6.3.3. System Safety Risk Ranking Matrices

The Edinburgh Tram Network SSMP mandates the system safety risks assessment classification that will be used. CAF acknowledge this requirement and has reproduced the matrices in this plan which will in turn, be issued to CAF Suppliers as the controlling safety plan. Further, CAF acknowledge that for the Project, the acceptability of safety risk to Edinburgh Tramway Network staff will be defined as ten times the level of safety risk acceptable to passengers/members of public.

6.3.3.1 Frequency of Hazardous Events

Category	Description	Freq Range	
		Passengers/Public	Staff
Frequent	Likely to occur frequently. The hazard will be continually experienced	> Monthly	> Daily
Probable	Will occur several times. The hazard can be expected to occur often	Between 1 Month and a year	Between Daily and 1 month
Occasional	Likely to occur several times. The hazard can be expected to occur several times	Between 1 and 10 years	Between 1 Month and a year
Remote	Likely to occur sometime in the system life cycle. The hazard can reasonably expected to occur	Between 10 and 100 years	Between 1 and 10 years
Improbable	Unlikely to occur but possible. It can be assumed that the hazard may exceptionally occur.	Between 100 and 1000 years	Between 10 and 100 years
Incredible	Extremely unlikely to occur. It can be assumed that the hazard may not occur.	< once per 1000 years	< once per 100 years

6.3.3.2 Hazardous Event Severity Level

Use or disclosure of the proposal data is subject to the restrictions noted on the title page of this proposal

Severity Level	Consequence to Persons
Catastrophic	Multiple fatalities
Critical	Single fatality or multiple major injuries
Marginal	Major injury
Insignificant	Minor injury

6.3.3.3 Risk Evaluation and Acceptance Criteria

Frequency of occurrence of a hazardous event	Risk Levels			
Frequent	Undesirable	Intolerable	Intolerable	Intolerable
Probable	Tolerable	Undesirable	Intolerable	Intolerable
Occasional	Tolerable	Undesirable	Undesirable	Intolerable
Remote	Negligible	Tolerable	Undesirable	Undesirable
Improbable	Negligible	Negligible	Tolerable	Tolerable
Incredible	Negligible	Negligible	Negligible	Negligible
	Insignificant	Marginal	Critical	Catastrophic
	Severity Levels of Hazard Consequence			

6.3.3.4 Actions to be Applied Against Risk Categories

Risk Category	Actions to be applied against each category
Intolerable	Shall be eliminated
Undesirable	Shall only be accepted when risk reduction is impracticable and with the agreement of the ETN Authority or the Safety Regulatory Authority, as appropriate
Tolerable	Acceptable with adequate control and with the agreement of the ERN Authority
Negligible	Acceptable with/without the agreement of the ETN Authority

For the purposes of this project, the ALARP principle will be applied to hazards falling into the Undesirable and Tolerable regions.

Use or disclosure of the proposal data is subject to the restrictions noted on the title page of this proposal

USB00000086_0153

7. REFERENCES

1. Edinburgh Tram Network System Safety Management Plan Issue 4 ULE90130-SW-PPN-00026 V2 dated 25th September 2006

2. EN 50126. Railway applications - The specification and demonstration of Reliability, Availability, Maintainability and Safety (RAMS).

3. Engineering Safety Management Issue (Yellow Book), Volumes 1 (Issue 4) & 2 (Issue 3), Fundamentals and Guidance

4. ORR Railway Safety Principles and Guidance Part 2 Sections G.

5. Railway and Other Guided Transport Systems (Safety) Regulations (ROGS) 2006.

6. Edinburgh Tram Network SDS Hazard Log ULE90130-SW-SW-MAT-00006 V4 dated 25th September 2006.

7. Rail Vehicle Accessibility Regulations 1998 and Rail Vehicle Accessibility (Amendments) Regulations 2000.

Use or disclosure of the proposal data is subject to the restrictions noted on the title page of this proposal

USB00000086_0154

Edinburgh Tram – Tram Technical Information
Submitted Data

Item	Description	Tram Parameter
1	General Dimensions	
1.1	Tram length - overall (m)	42.85
1.2	Length over outer doors (mm)	38132
1.3	Tram width (mm)	2650
1.4	Tram height (pantograph lowered, mm)	3800 (approx. to be confirmed once pantograph supplier is selected)
1.5	Door sill height (mm)	350
1.6	Nominal platform height (mm)	300
1.7	Total number of axles (wheel pairs)	8
1.8	Number of powered axles (wheel pairs)	6
1.9	Number of articulations	6
1.10	Bogie wheelbase (mm)	1800
1.11	Bogie pivot centres (mm)	11040
1.12	Wheel diameter (new / worn, mm)	590 / 510
1.13	Minimum bogie clearance (mm)	50
1.14	Length of end body sections (mm)	7016
1.15	Length of suspended body sections (mm)	6745
1.16	Length of Intermediate body sections (mm)	4295
1.17	Horizontal stepping distance (mm)	50
2	Weights	
2.1	Tare weight	55.85t
2.2	Fully loaded weight (AW5)	85.4t
2.3	Maximum axle load at AW5 (kg)	11426 (+/-5%)
2.4	Axle weights at tare (min-max) (kg)	6154 – 7434
2.5	Axle weights at AW4 (min-max) (kg)	9565 – 10536
2.6	Rotating mass (% of overall vehicle mass)	7%
2.7	Mass of the wheel rims	113kg

Item	Description	Tram Parameter
2.8	Bogie mass (motor, trailer) (kg) Unsprung masses (motor, trailer) (kg)	4961, 3071 1425, 1651
2.9	Mass of the body sections, less bogies (kg)	6651, 5623, 3992, 4967, 3690, 6125, 6844
3	Operational Data	
3.1	Maximum gradient capability	7.5%
3.2	Maximum operational speed (km/h)	70
3.3	Time to open / close doors (secs).	3 (+0.5/-0)
3.4	Traction motor continuous power rating	12 x 61 kW
3.5	Maximum traction current	1350 A (approx) (depending on final supplier)
3.6	Acceleration rate, (m/s^2, 40-70km/h)	1.2 - 0.8
3.7	Tractive Effort (TE); at zero speed Maximum kN, @70km/h	102kN or 106kN 50kN or 40 kN (depending on final supplier)
3.8	Braking rates: (m/s^2) Service (Equivalent decelerat. Emergency 1 & 2 as per EN-13452) Emergency 3 Emergency 4 Security	0 - 1.2 1.2 2.8 2.8 1.0
3.9	Jerk rates (m/s^3): as per EN-13452 Service Emergency 1 & 2 Emergency 3 & 4 Security	 less than 1.5 4 8 4
3.10	Auxiliary loads	66KW (saloon heating) + 66 KVA (2 auxiliary converters)
4	Capacity & Interior	
4.1	Minimum aisle width (mm)	650
4.2	Saloon internal height (mm)	2183
4.3	Floor height (mm)	350
4.4	Floor ramp gradient	0%
4.5	Step height (Internal, mm)	0

Item	Description	Tram Parameter
4.6	Maximum capacity @4ppm[2]	248 + 2 wheelchairs

Item	Position	Operating Conditions	Assumed Noise level	Measured noise level
5		**Noise levels**		
5.1	Passenger Saloon	Standstill, HVAC working at intermediate power	Laeq = 59 dB(A)	61 dB(A)
5.2	Passenger Saloon	Standstill, HVAC working at full power	Laeq = 65 dB(A)	65 dB(A)
5.3	Passenger Saloon	40 km/h, HVAC working at full power	Laeq = 69 dB(A)	75 dB(A) (on ballast) 81 DB(A) (on concrete)
5.4	Driver's Cab	Standstill, air conditioning working with full power	Laeq = 69 dB(A)	63 dB(A)
5.5	Driver's Cab	40 km/h, air conditioning working with full power	Laeq = 70 dB(A)	72 dB(A) (on ballast) 76 dB(A) (on concrete)
5.6	Exterior Noise	Standstill, driver's air conditioning, and saloon HVAC at half power background noise 55 dB(A)	Laeq = 58 dB(A)	63 dB(A)
5.7	Exterior Noise	Standstill, driver's air conditioning, and saloon HVAC at full power background noise 55 dB(A)	Laeq = 60 dB(A)	65 dB(A)
5.8	Exterior Noise	40 km/h, driver's air conditioning and saloon HVAC at full power	Lamax= 75 dB(A)	68 dB(A) (on ballast) 76-78 dB(A) (concrete)
5.9	Exterior Noise	50 km/h, driver's air conditioning and saloon HVAC working with full power		70 dB(A) (grass) 81 dB(A) (concrete)
5.10	Exterior noise	65km/h, driver's aircon & saloon HVAC working with full power	Lamax= 81 dB(A)	73 dB(A) (on ballast)

Sound levels measured according to ISO 3381:2000 & ISO 3095:2001 & 2005.

Measurements taken in Vélez-Málaga & Bilbao

Item	Description	
6	**Tramway Path**	
6.1	Developed Kinematic Envelope (DKE), for clearances; 2-D dynamic cross-sections	See tables and charts of DKE clearances
6.2	Wheel/rail interface Rail characteristics: Gauge corner radius of 13mm, head inclination of 1:40. Grooved rail may be assumed to have a groove width of 36mm. The wheels should be capable of flange running. Wheel back-to-back dimension of 1380mm.	Ri53r13 (= 59Ri2 according to EN14811:2006) SDS wheel profile is acceptable Limited flange running is acceptable 1386mm preferred If Vignol rails are installed, for wheel wear reasons , UIC-54 type rails with an incline of 1/40 are preferred
6.3	Virtual transition length (m)	8
6.4	Track centre line to platform edge offset (for a DKE reduced to suit speed for running through Tramstops, assumed to be 35km/h)	1440
6.5	Maximum cant	100 mm
6.6	Cant gradient limit	3.3mm/m max
6.7	Maximum cant deficiency	75 mm (100 mm in Depot)
6.8	Vertical curvature limit (hog/sag)	500m
6.9	Horizontal curvature	25m on line, 20m in the depot 25m or above preferred in depot
6.10	Track alignment, gradients & curves	No perceived problems with the combined alignments

6	DKE, Track Spacing

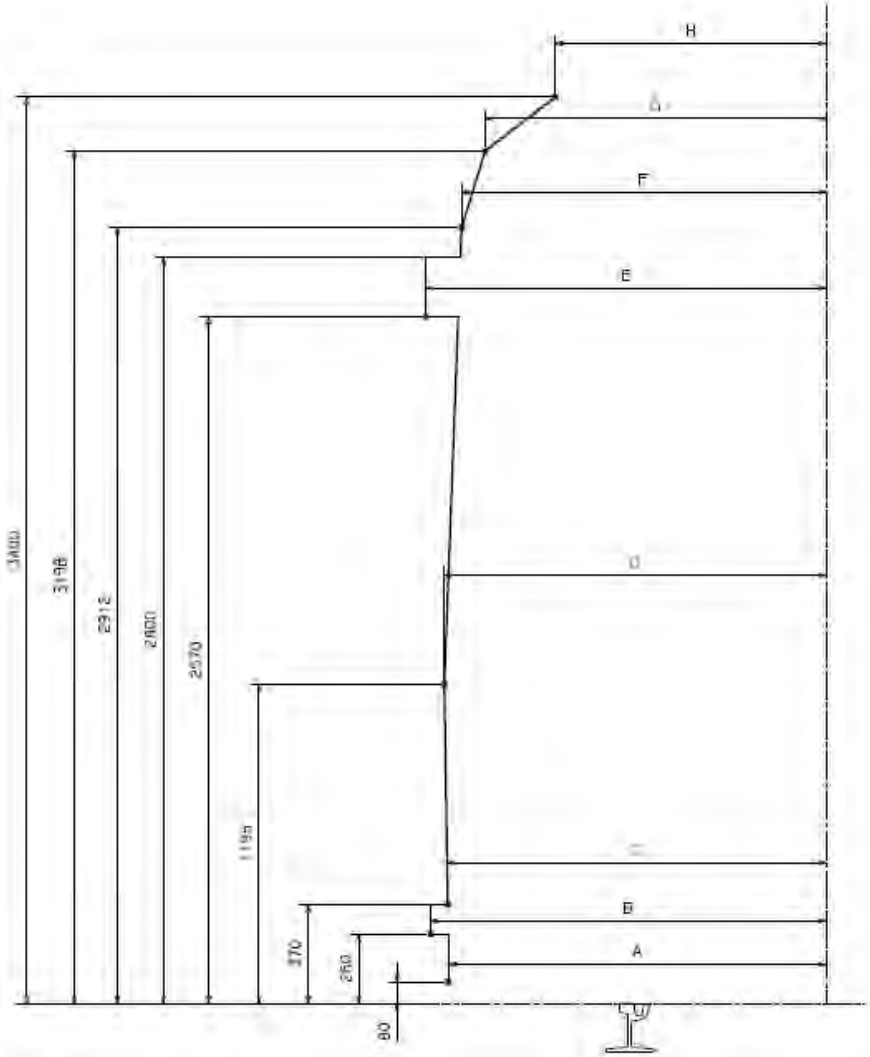

DEVELOPED KINEMATIC ENVELOPE INSIDE CURVE													
Radius / Point	25	30	40	50	70	90	160	200	300	500	1000	2000	STRAIGHT
A	1575	1550	1518	1499	1476	1462	1457	1433	1427	1420	1418	1419	1414
B	1642	1617	1585	1566	1543	1529	1524	1501	1494	1487	1485	1486	1480
C	1577	1552	1520	1501	1478	1464	1459	1436	1429	1423	1420	1421	1415
D	1593	1567	1535	1517	1494	1480	1475	1451	1444	1438	1435	1437	1425
E	1553	1528	1496	1477	1489	1496	1498	1508	1513	1511	1509	1510	1468
F	1534	1509	1477	1458	1435	1421	1416	1393	1386	1379	1377	1378	1355
G	1447	1421	1389	1370	1348	1334	1329	1305	1298	1292	1289	1291	1266
H	1184	1159	1127	1108	1086	1072	1066	1043	1036	1030	1027	1028	1002

DEVELOPED KINEMATIC ENVELOPE OUTSIDE CURVE													
Point \ Radius	25	30	40	50	70	90	100	200	300	500	1000	2000	STRAIGHT
A	1571	1550	1524	1508	1488	1475	1471	1449	1443	1432	1424	1422	1413
B	1639	1617	1591	1575	1556	1543	1538	1516	1510	1500	1491	1489	1480
C	1574	1552	1526	1510	1491	1478	1473	1451	1445	1435	1426	1424	1415
D	1592	1571	1544	1529	1509	1496	1492	1470	1464	1453	1445	1443	1428
E	1670	1649	1623	1607	1587	1575	1570	1548	1542	1532	1523	1521	1496
F	1539	1518	1492	1476	1457	1444	1439	1417	1411	1401	1392	1390	1363
G	1453	1432	1405	1389	1370	1357	1352	1330	1324	1314	1305	1303	1275
H	1191	1170	1144	1126	1108	1096	1091	1069	1063	1053	1044	1042	1012

Clearances

height (m)	Curve Radius (m) 25	30	40	50	70	90	100
370	809,4	618,9	417,0	345,9	266,8	223,9	208,7
1195	905,4	714,9	513,0	441,8	362,8	319,8	304,7
2100	940,1	749,6	547,6	476,5	397,5	354,5	339,4
2683	866,6	676,0	474,1	403,0	289,9	225,5	202,9

height (m)	Curve Radius (m) 200	300	500	1000	2000	Straight
370	145,2	121,2	112,8	124,0	124,8	140,3
1195	241,1	217,2	208,8	219,9	220,7	247,3
2100	275,8	251,8	243,4	254,6	255,4	294,1
2683	105,8	70,4	57,4	68,6	69,4	115,9

Table 1. Clearance (mm) for track without centre poles

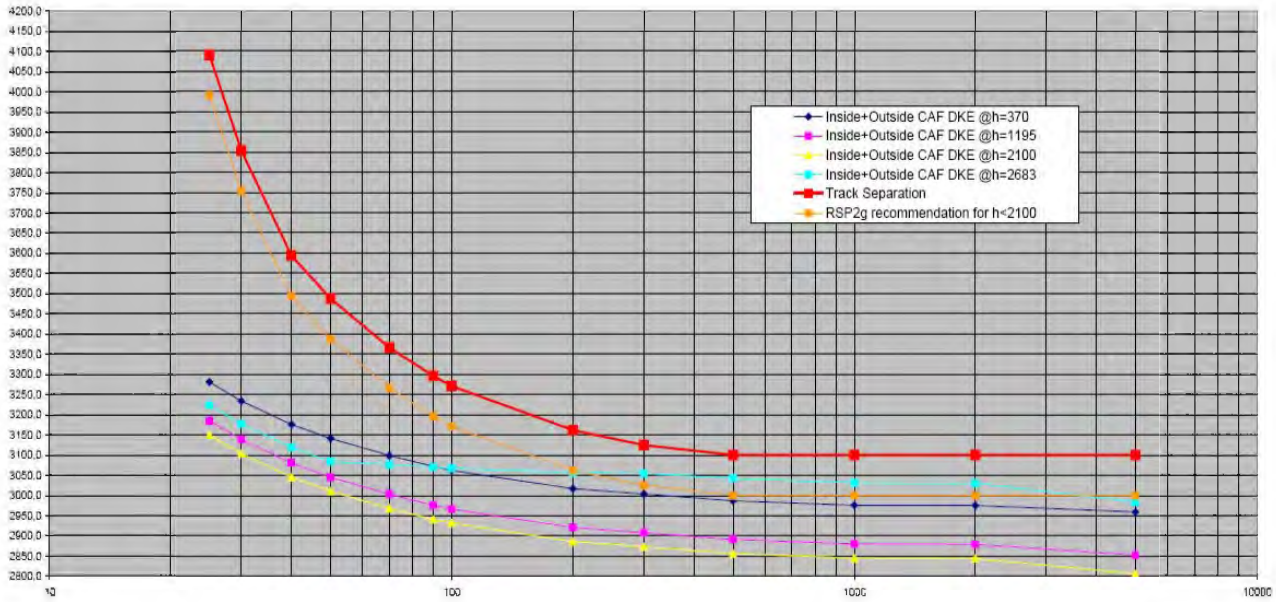

7	**Pantograph**	
7.0	Pantograph type	Possible suppliers Schunk: LA type Stennmann : FB 80.73 type
7.1	Pantograph Stroke (Min & max height, above rail, 3.8- 6.9m)	3100 mm About 3300 mm
7.2	Overall collector head width, 1850mm	1981mm 1900 mm
7.3	Carbon length 1000mm minimum	1066 mm 1050 mm
7.4	Head mass, metallised carbon -15kg	See notes below
7.5	Articulation frame dynamic mass- (12-16kg)	See notes below
7.6	Static contact force, 90-180N	70 +/-10N 60 – 120 N (adjustable)

Schunk

m1 = 6.34 (x2)Kg:	unsuspended mass of carbon strips
m2 = 12.1 Kg:	mass of remaining pan head + reduced rotating mass of upper frame
m3 = 29.2 Kg:	red. Mass of frame - reduced rotating mass of upper frame

Stennmann

m1 = 12.07Kg:	reduced unsprung masses of the collector head having direct contact to the catenary wire (e.g. the contact piece with attachment parts) related to the peak tube.
m2 = 8.61Kg:	springed collector head mass plus the reduced proportionate mass of the upper arm in the peak tube (1/4 of the upper arm mass and ¼ of the collector head guidance mass)
m3 = 5.47, 5.88, 6.29 Kg:	the mass of the upper and lower arm of the collector head guidance and the guide rod concentrated meant reduced in the peak tube

Tram Vehicle

General Arrangement of axle positions and end doors

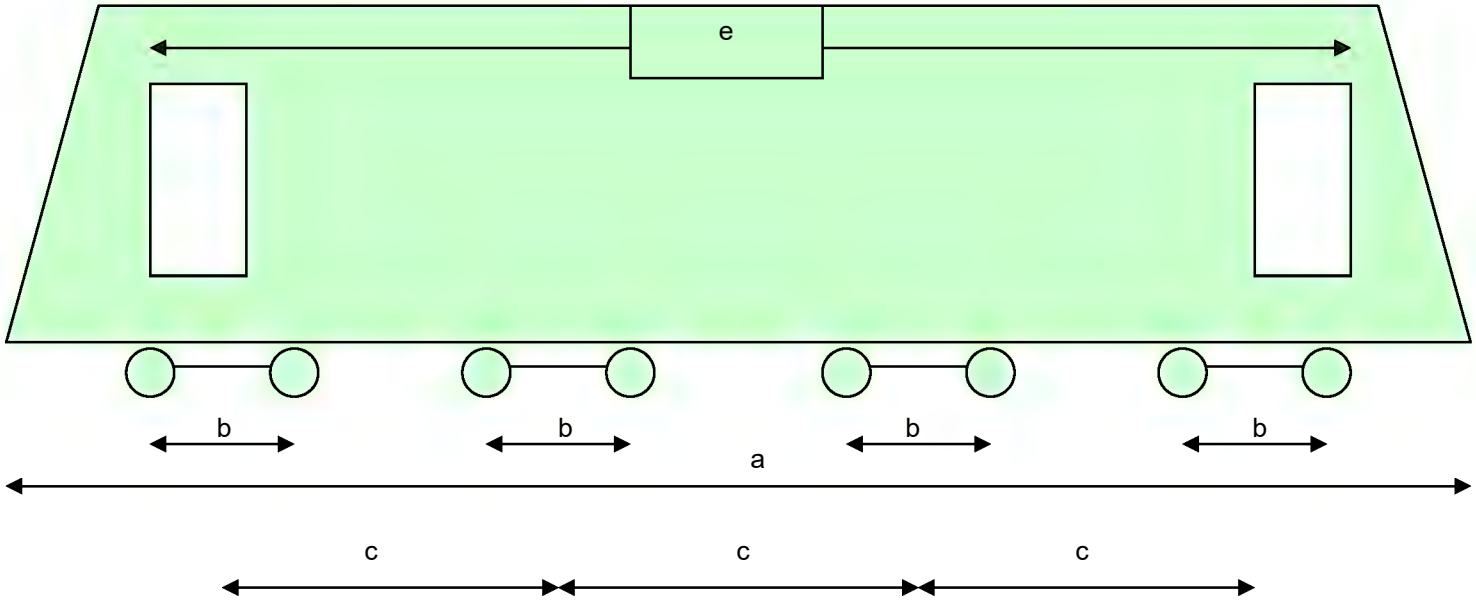

a	b	c	e
42856	1800	11040	38132

Dimensions in mm

Tram Vehicle

Distribution of axle loadings

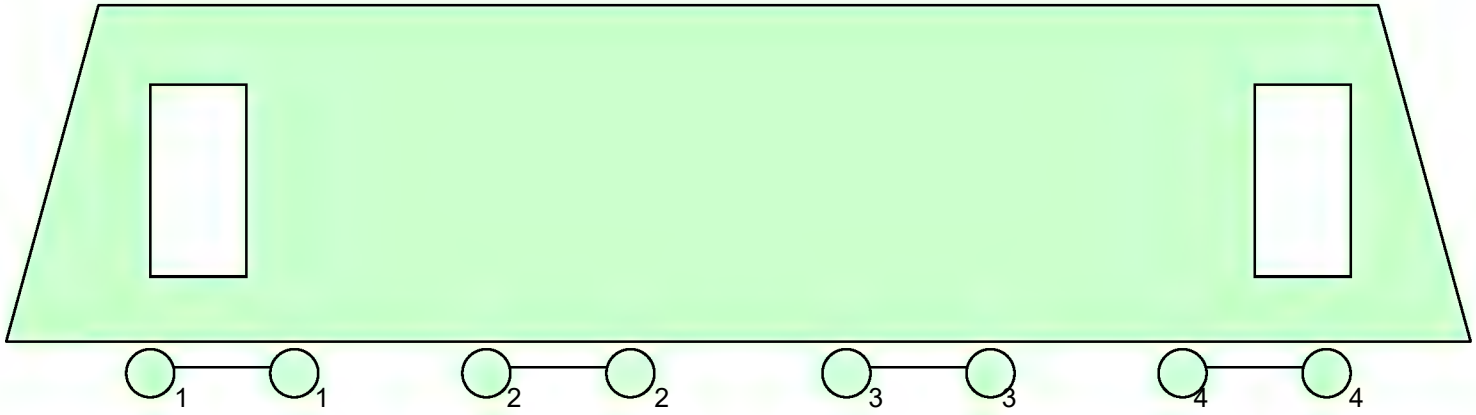

All weights in kg at AW5 loading (8 persons/m^2):

1	2	3	4	Total
10297	11426	10456	10519	85394

ANNEX 1.2.3 TRAM TESTING AND COMMISSIONING

VEHICLE TESTING

1. VEHICLE TESTING 2

Use or disclosure of the proposal data is subject to the restrictions noted on the title page of this proposal
USB00000086_0165

1. VEHICLE TESTING

Prior to the final reception, the units and their items shall be submitted to a series of tests which guarantee the fulfilment of the requirements of the customer and of the corresponding standards. Also, the production process shall be controlled and the various materials and systems fitted on the units shall be submitted to tests.

The following three testing phases are distinguished:

- Equipment and materials tests: Tests of the various components and equipment at the point of origin (supplier factory) prior to their installation on the train. Verification of the fulfilment of the technical specification of each item of equipment and material, safety, functionality, fire and smoke performance, dimensional, structural and finish criteria, etc.

- In Factory Tests: Elastic tests executed during the production of the units. Verification of the production and assembly processes for the various items making up the unit. Welding, dimensions, assembly, pneumatic tests, electric tests, weight, curve negotiation, etc. controls.

- Track Testing: Tests to be executed on tracks (operation line) prior to the final acceptance of the units. Verification of the dynamic performances and of the correct overall operation of the unit. Tests for acceleration, traction and brake performance, running dynamics, noise level tests, air conditioning tests, multiple control running tests, safety equipment tests, etc.

Two types of tests are distinguished in the factory tests:

- Type tests: These are executed on the first unit produced or the first item of equipment of each system, in order to verify the fulfilment of the technical specification laid down in the contract.

- Series tests: These are performed on the other units to confirm that they fulfil the main performances verified in the type tests.

CAF shall define the test protocols of each of the items of equipment or materials fitted on the units in the various phases of the project, and, prior to their execution, they shall be submitted to the customer's approval.

As an example, generic lists of the testing phases throughout the project figure attached to this document (in Annex 1.2.3). They describe the "Test and Inspection for incoming goods", "Test and Inspection for Manufacturing" and the "Final Test and Inspections".

The testing process shall be executed in accordance to that laid down in Part 1c "Tram Testing and Commissioning" of the Employer's Requirement. Please see comment to this document in section 1.1.1 "Test and Commissioning".

Use or disclosure of the proposal data is subject to the restrictions noted on the title page of this proposal
USB00000086_0166

PLAN DE INSPECCION Y ENSAYOS DE ELEMENTOS DEL EXTERIOR

TEST AND INSPECTION PLAN FOR INCOMING GOODS

PROYECTO / *PROJECT :* *GENERAL*

PIEEE- GENERAL | -

Clave(s) Obra:

	Elemento u Operación a Controlar *Part or Operation to be Controlled*			Tipo de Control *Control Type*							Registros *Records*	
Item *Item*	**Código** *Code*	**Denominación** *Designation*	**Suministrador** *Supplier*	**Tipo** *Type*	**Fai** *Fai*	**Serie** *Routine*	**Especificación de Control** *Control Specification*	**Responsable** *Responsible*	**Frecuencia** *Frequency*	**Presencia Cliente** *Customer Presence*	**Documento** *Document*	**Entrega Cliente** *Delivery to Customer*
1.- ELEMENTOS DE SEGURIDAD												
1.- SAFETY PARTS												
1.1	varios/*various*	Piezas fundidas, forjadas, mecanizadas y soldadas (incluidos depósitos de presión) / *Cast, forging, machining and weld parts (including pressure reservoir)*	varios / *various*	O	O		según plano / *according to drawing*	C	Primer artículo / *First article*	-	informe / *report*	-
						I	según plano y PCR / *according to drawing and PCR*	C	100%	-	certificado y registro inspección / *certificate and inspection record*	-
1.2		parabrisas / *front glass*			O		s/plano / *acc. to drw.*	C	Primer artículo / *First article*	-	informe / report	-
						I	s/plano / *acc. to drw.*	C	100%	-	certificado / certificate	-
1.3		ventana completa / *complete window*			O		s/plano / *acc. to drw.*	C	Primer artículo / *First article*	-	informe / report	-
						I	s/plano / *acc. to drw.*	C	100%	-	certificado / certificate	-
1.4		mecanismo y puertas de acceso / *door mechanism and doors*		O	O		s/plano y especif. / *acc. to drw. and specific.*	C	Primer artículo / *First article*	-	informe / report	-
						I	s/plano y especif. / *acc. to drw. and specific.*	C	100%	-	certificado / certificate	-
1.5		control freno / *brake control*		O	O		s/plano y especif. / *acc. to drw. and specific.*	C	Primer artículo / *First article*	-	informe / report	-
						I	s/plano y especif. / *acc. to drw. and specific.*	C	100%	-	certificado / certificate	-

PLAN DE INSPECCION Y ENSAYOS DE ELEMENTOS DEL EXTERIOR

TEST AND INSPECTION PLAN FOR INCOMING GOODS

PROYECTO / *PROJECT :* GENERAL

PIEEE- GENERAL | -

Clave(s) Obra:

	Elemento u Operación a Controlar *Part or Operation to be Controlled*			Tipo de Control *Control Type*							Registros *Records*	
Item *Item*	**Código** *Code*	**Denominación** *Designation*	**Suministrador** *Supplier*	**Tipo** *Type*	**Fai** *Fai*	**Serie** *Routine*	**Especificación de Control** *Control Specification*	**Responsable** *Responsible*	**Frecuencia** *Frequency*	**Presencia Cliente** *Customer Presence*	**Documento** *Document*	**Entrega Cliente** *Delivery to Customer*
2.- ELEMENTOS DE CONFORT Y FUNCIONALIDAD												
2.- COMFORT AND FUNCTIONALITY PARTS												
2.1		producción y tratamiento de aire / *compressor and air treatment*		O	O		s/plano y especif. / *acc. to drw. and specific.*	C	Primer artículo / *First article*	-	informe / report	-
						I	s/plano y especif. / *acc. to drw. and specific.*	C	100%	-	certificado / certificate	-
2.2		batería / *battery*				I	s/plano y especif. / *acc. to drw. and specific.*	C	100%	-	certificado / certificate	-
2.3		cofre batería / *battery box*				I	s/plano / *acc. to drw.*	C	Primer artículo / *First article*	-	informe / report	-
2.4		compresor auxiliar y levante / *aux. compressor and lifting*		O	O		s/plano y especif. / *acc. to drw. and specific.*	C	Primer artículo / *First article*	-	informe / report	-
						I	s/plano y especif. / *acc. to drw. and specific.*	C	100%	-	certificado / certificate	-
2.5		aux. neuméticos / pneumatic aux.		O	O		s/plano y especif. / *acc. to drw. and specific.*	C	Primer artículo / *First article*	-	informe / report	-
						I	s/plano y especif. / *acc. to drw. and specific.*	C	100%	-	certificado / certificate	-
2.6		puerta pasillo intercomunicación / *gangway door*		O	O		s/plano y especif. / *acc. to drw. and specific.*	C	Primer artículo / *First article*	-	informe / report	-
						I	s/plano y especif. / *acc. to drw. and specific.*	C	100%	-	certificado / certificate	-
2.7		aire acondicionado salón / *saloon air conditioning*		O	O		s/plano y especif. / *acc. to drw. and specific.*	C	Primer artículo / *First article*	-	informe / report	-
						I	s/plano y especif. / *acc. to drw. and specific.*	C	100%	-	certificado / certificate	-

PLAN DE INSPECCION Y ENSAYOS DE ELEMENTOS DEL EXTERIOR

TEST AND INSPECTION PLAN FOR INCOMING GOODS

PROYECTO / *PROJECT :* GENERAL

PIEEE- GENERAL | -

Clave(s) Obra:

	Elemento u Operación a Controlar *Part or Operation to be Controlled*			Tipo de Control *Control Type*							Registros *Records*	
Item *Item*	**Código** *Code*	**Denominación** *Designation*	**Suministrador** *Supplier*	**Tipo** *Type*	**Fai** *Fai*	**Serie** *Routine*	**Especificación de Control** *Control Specification*	**Responsable** *Responsible*	**Frecuencia** *Frequency*	**Presencia Cliente** *Customer Presence*	**Documento** *Document*	**Entrega Cliente** *Delivery to Customer*
2.8		aire acondicionado cabina / cab *air conditioning*		O	O		s/plano y especif. / *acc. to drw. and specific.*	C	Primer artículo / *First article*	-	informe / report	-
						I	s/plano y especif. / *acc. to drw. and specific.*	C	100%	-	certificado / certificate	-
2.9		anunciador estaciones / *station announcement system*			I		s/plano y especif. / *acc. to drw. and specific.*	C	Primer artículo / *First article*	-	informe / report	-
						I	s/plano y especif. / *acc. to drw. and specific.*	C	100%	-	certificado / certificate	-
2.10		telecomunicación				I	s/plano y especif. / *acc. to drw. and specific.*	C	100%	-	certificado / certificate	-
2.11		asiento conductor / *driver seat*			I		s/plano / *acc. to drawing*	C	Primer artículo / *First article*	-	informe / report	-
						I	s/plano / *acc. to drawing*	C	100%	-	certificado / certificate	-
2.12		conductos aire acondicionado			O		s/plano / *acc. to drawing*	C	Primer artículo / *First article*	-	informe / report	-
						I	s/plano / *acc. to drawing*	C	100%	-	certificado / certificate	-
3.- ELEMENTOS CON EXIGENCIAS DE FUEGO Y HUMO												
3.- PARTS WITH FIRE AND SMOKE REQUIREMENTS												
3.1		piezas de poliéster: testero e interiorismo / *polyester parts: front end and interior*				I	s/plano / *acc. to drawing*	C	100%	-	certificado / certificate	-
3.2		aislamientos / *isolating materials*				I	s/plano / *acc. to drawing*	C	100%	-	certificado / certificate	-
3.3		cables / *cabling*				I	s/plano / *acc. to drawing*	C	100%	-	certificado / certificate	-

PLAN DE INSPECCION Y ENSAYOS DE ELEMENTOS DEL EXTERIOR

TEST AND INSPECTION PLAN FOR INCOMING GOODS

PROYECTO / *PROJECT :* *GENERAL*

PIEEE- GENERAL | -

Clave(s) Obra:

	Elemento u Operación a Controlar *Part or Operation to be Controlled*			Tipo de Control *Control Type*							Registros *Records*	
Item *Item*	**Código** *Code*	**Denominación** *Designation*	**Suministrador** *Supplier*	**Tipo** *Type*	**Fai** *Fai*	**Serie** *Routine*	**Especificación de Control** *Control Specification*	**Responsable** *Responsible*	**Frecuencia** *Frequency*	**Presencia Cliente** *Customer Presence*	**Documento** *Document*	**Entrega Cliente** *Delivery to Customer*
3.4		tableros piso salón / *saloon floor board*			O	I	s/plano / *acc. to drawing*	C	100%	-	certificado / certificate	-
3.5		tablero piso cabina / *cab floor board*			O	I	s/plano / *acc. to drawing*	C	100%	-	certificado / certificate	-
3.6		cortinillas / *curtains*				I	s/plano / *acc. to drawing*	C	100%	-	certificado / certificate	-
4.- ELEMENTOS ESTRUCTURALES												
4.- STRUCTURAL PARTS												
4.1		perfiles estructurales / *structural profiles*			O		s/plano / *acc. to drawing*	C	Primer artículo / *First article*	-	informe / report	-
						I	s/plano / *acc. to drawing*	C	100%	-	certificado / certificate	-
4.2		siderúrgico / *iron & steel*				I	s/plano y PCR/ *acc. to drawing and PCR*	C	100%	-	certificado y registro inspección / certificate and inspection record	-
5.- PINTURA												
5.- PAINTING												
5.1		pintura exterior / *exterior painting*				I	s/plano / *acc. to drawing*	C	100%	-	certificado / certificate	-

LEYENDA / *LEGEND*

Tipo de Control / *Control Type*
O : Origen / *Supplier factory*
I : Interna / *Internal*

Responsable / *Responsible*
F : Fabricación / *Manufacturing*
C : Calidad / *Quality*
T : O. Técnica / *Engineering*
S : Suministrador / *Supplier*

Presencia Cliente / *Customer Presence*
R : Revisión registros / *Records review*
A : Punto de Aviso / *Witness point*
E : Punto de Espera / *Hold point*

PLAN DE INSPECCION Y ENSAYOS DE FABRICACION

TEST AND INSPECTION PLAN FOR MANUFACTURING

PIEF- GENERAL | -

Clave(s) Obra:

PROYECTO / *PROJECT : GENERAL*

	Elemento u Operación a Controlar *Part or Operation to be Controlled*			Tipo de Control *Control Type*							Registros *Records*	
Item *Item*	**Código** *Code*	**Denominación** *Designation*	**Suministrador** *Supplier*	**Tipo** *Type*	**Fai** *Fai*	**Serie** *Routine*	**Especificación de Control** *Control Specification*	**Responsable** *Responsible*	**Frecuencia** *Frequency*	**Presencia Cliente** *Customer Presence*	**Documento** *Document*	**Entrega Cliente** *Delivery to Customer*
10.		**PROCESOS GENERALES/*GENERAL PROCESSES***										
10.1		**Procesos generales de calderería**:Corte, corte laser, corte por plasma, enderezado, lijado, esmerilado, mecanizado,plegado…/***Manufacturing general processes: cutting,*** *laser and plasma cutting, straightening, grinding, machining, bending…*	CAF (div.III y/o IV)			I	P-10.07-BZ	F	x %		según P-10.07-BZ	
10.2		**Procesos generales de fabricación de estructuras/*Estructures manufacturing general processes***				I	P-10.05-BZ	F / C	x %		según P-10.05-BZ	
10.3		Control de los procesos de soldadura/*Welding processes control*	CAF (div.III y/o IV)			I	P-10.04-BZ	F / C	x %		según P-10.04-BZ	
10.3.1.		Procesos de soldeo cualificados/*Qualified welding procedures*	CAF (div.III y/o IV)			I	EN 288	C	PTipo		Aplicación de materiales y procesos soldeo	
10.3.2		Consumibles de soldadura/ *Welding filler products*	CAF (div.III y/o IV)			I	EN 440 y N-07.04-BZ-02	C	s/N-11.03-BZ-01		Certificados de fabricante	
10.3.3		Soldadores cualificados/ Qualified welders	CAF (div.III y/o IV)			I	EN 287	F	100%		Mod. RSC	
10.3.4		Preparación de juntas a soldar (chaflanes, separaciones)/*Welding joints preparation(groove, clearances)*	CAF (div.III y/o IV)			I	Plano N-10.04-BZ-02/07	F	100%		Ficha de control/ *Control file*	

PLAN DE INSPECCION Y ENSAYOS DE FABRICACION

TEST AND INSPECTION PLAN FOR MANUFACTURING

PIEF- GENERAL | -

Clave(s) Obra:

PROYECTO / *PROJECT : GENERAL*

	Elemento u Operación a Controlar *Part or Operation to be Controlled*			Tipo de Control *Control Type*							Registros *Records*	
Item *Item*	**Código** *Code*	**Denominación** *Designation*	**Suministrador** *Supplier*	**Tipo** *Type*	**Fai** *Fai*	**Serie** *Routine*	**Especificación de Control** *Control Specification*	**Responsable** *Responsible*	**Frecuencia** *Frequency*	**Presencia Cliente** *Customer Presence*	**Documento** *Document*	**Entrega Cliente** *Delivery to Customer*
10.3.5		Operaciones de armado y punteado/Assembly and tack welding operations	CAF (div.III y/o IV)			I	Instrucc.de sold. N-10.04-BZ-15	F	100%		Ficha de control/ *Control file*	
10.3.6		Operación de soldar/*Welding operation*	CAF (div.III y/o IV)			I	Instrucc.de sold. N-10.04-BZ-15 Control visual N-10.04-BZ-02/07 END: P.M.: N-10.04-BZ-03 LP: N-10.04-BZ-05 RX:N-10.04-BZ-06 US:N-10.04-BZ-08	F F C	100% 100% (1)		Ficha de control/ *Control file* Gama de Fabric. Ficha de Control planilla/*control sheet*	si
		(1) Los END-s a realizar en cada caso están reflejados en los planes de control particulares/*(1)NDT are idicated in specific TIP*										
20.		**FABRICACIÓN ESTRUCTURA CAJA/*CARBODY SHELL MANUFACTURING***										
20.1.		Traviesa pivote/Bolster beam:	CAF (div.III y/o IV)		I	I	plano, especificaciones, instrucciones FAI	C	FAI		Informe FAI/ *Fai report*	
20.4.		Cabecero delantero/ *Front high floor*	CAF (div.III y/o IV)			I	Instrucción de verificación	C	5 primeras piezas + 10%		planilla/*control sheet*	
20.5.		Cabecero trasero/*Rear high floor*	CAF (div.III y/o IV)		I		plano, especificaciones, instrucciones FAI	C	FAI		Informe FAI/ *Fai report*	
20.7.		Bastidor de coche motor/*Motor underframe*	CAF (div.III y/o IV)		I		plano, especificaciones, instrucciones FAI	C	FAI		Informe FAI/ *Fai report*	

PLAN DE INSPECCION Y ENSAYOS DE FABRICACION

TEST AND INSPECTION PLAN FOR MANUFACTURING

PIEF- GENERAL | -

Clave(s) Obra:

PROYECTO / *PROJECT : GENERAL*

	Elemento u Operación a Controlar *Part or Operation to be Controlled*			Tipo de Control *Control Type*							Registros *Records*	
Item *Item*	**Código** *Code*	**Denominación** *Designation*	**Suministrador** *Supplier*	**Tipo** *Type*	**Fai** *Fai*	**Serie** *Routine*	**Especificación de Control** *Control Specification*	**Responsable** *Responsible*	**Frecuencia** *Frequency*	**Presencia Cliente** *Customer Presence*	**Documento** *Document*	**Entrega Cliente** *Delivery to Customer*
20.7.1		Verificación dimensional/*dimensional inspection*	CAF (div.III y/o IV)			I	Instrucción de verificación	C	5 primeras piezas + 10%	A	planilla/*control sheet*	
20.7.2		Verificación END de soldaduras/ *NDT welds control*	CAF (div.III y/o IV)			I	planilla/*control sheet*	C	100%	A	planilla/*control sheet*	Si
20.8		Bastidor de coche remolque/ *Trailer underframe*	CAF (div.III y/o IV)		I		plano, especificaciones, instrucciones FAI	C	FAI		Informe FAI/ *Fai report*	
20.8.1		Verificación dimensional/*dimensional inspection*	CAF (div.III y/o IV)			I	planilla/*control sheet*	C	100%	A	planilla/*control sheet*	Si
20.8.2		Verificación END de soldaduras/ *NDT welds inspection*	CAF (div.III y/o IV)			I	planilla/*control sheet*				planilla/*control sheet*	Si
20.9		Testero delantero/ *Front end*	CAF (div.III y/o IV)		I		plano, especificaciones, instrucciones FAI	C	FAI		Informe FAI/ *Fai report*	
20.10		Testero trasero/ *Rear end*	CAF (div.III y/o IV)		I		plano, especificaciones, instrucciones FAI	C	FAI		Informe FAI/ *Fai report*	
20.11		Techo: control de la estanqueidad/*Roof: water tightness*	CAF (div.III y/o IV)			I	Instrucciones de verificación	C	5 primeras piezas + 10%		planilla/*control sheet*	Si
20.12		Costado/ *Side walls*	CAF (div.III y/o IV)		I		plano, especificaciones, instrucciones FAI	C	FAI		Informe FAI/ *Fai report*	
20.13		**Caja de coche motor/ *Motor carbody shell***	CAF (div.III y/o IV)		I		plano, especificaciones, instrucciones FAI	C	FAI		Informe FAI/ *Fai report*	
20.13.1		Inspección al primer artículo/ *Fai*										

PLAN DE INSPECCION Y ENSAYOS DE FABRICACION

TEST AND INSPECTION PLAN FOR MANUFACTURING

PIEF- GENERAL | -

Clave(s) Obra:

PROYECTO / *PROJECT : GENERAL*

	Elemento u Operación a Controlar *Part or Operation to be Controlled*			Tipo de Control *Control Type*							Registros *Records*	
Item *Item*	**Código** *Code*	**Denominación** *Designation*	**Suministrador** *Supplier*	**Tipo** *Type*	**Fai** *Fai*	**Serie** *Routine*	**Especificación de Control** *Control Specification*	**Responsable** *Responsible*	**Frecuencia** *Frequency*	**Presencia Cliente** *Customer Presence*	**Documento** *Document*	**Entrega Cliente** *Delivery to Customer*
20.13.2		Verificación dimensional/*Dimensional verification*	CAF (div.III y/o IV)			I	planilla/*control sheet*	C	5 primeras piezas + 10%	A	planilla/*control sheet*	Si
20.13.3		Verificación END de soldaduras/ *NDT welds inspection*	CAF (div.III y/o IV)			I	planilla/*control sheet*	C	100%	A	planilla/*control sheet*	Si
20.14		**Caja de coche remolque/ *Trailer carbody shell***	CAF (div.III y/o IV)		I		plano, especificaciones, instrucciones FAI	C	FAI		Informe FAI/ *Fai report*	
20.14.1		Inspección al primer artículo/ *Fai*										
20.14.2		Verificación dimensional/*Dimensional verification*	CAF (div.III y/o IV)			I	planilla/*control sheet*	C	5 primeras piezas + 10%	A	planilla/*control sheet*	Si
20.14.3		Verificación END de soldaduras/ *NDT welds inspection*					planilla/*control sheet*				planilla/*control sheet*	
30.		**FABRICACIÓN ESTRUCTURA BOGIE/*BOGIE FRAME MANUFACTURING***										
30.1.		Armar y soldar largueros/ *Assembly and weld main bems*	C.A.F. (Div.III)			I	Ficha de control/ *Control file*	F	100%		Ficha de control/ *Control file*	
30.2.		Enderezar larguero/ *straighten main bems*	C.A.F. (Div.III)			I	Ficha de control/ *Control file*	F	100%		Ficha de control/ *Control file*	
30.3.		Mecanizar larguero/ *Main bems machining*	C.A.F. (Div.III)			I	Ficha de control/ *Control file*	F	100%		Ficha de control/ *Control file*	
30.4.		Armar y soldar traviesa/ Assembly and weld cross-beam	C.A.F. (Div.III)			I	Ficha de control/ *Control file*	F	100%		Ficha de control/ *Control file*	
30.5.		Enderezar traviesa/ *Straighten cross-beam*	C.A.F. (Div.III)			I	Ficha de control/ *Control file*	F	100%		Ficha de control/ *Control file*	
30.6		Armar y soldar "H" central/ Assembly and weld central "H"	C.A.F. (Div.III)			I	Ficha de control/ *Control file*	F	100%		Ficha de control/ *Control file*	
30.7		Enderezar "H" central/ *straighten central "H"*	C.A.F. (Div.III)			I	Ficha de control/ *Control file*	F	100%		Ficha de control/ *Control file*	
30.8		Mecanizar "H" central/*central "H" machining*	C.A.F. (Div.III)			I	Ficha de control/ *Control file*	F	100%		Ficha de control/ *Control file*	

PLAN DE INSPECCION Y ENSAYOS DE FABRICACION

TEST AND INSPECTION PLAN FOR MANUFACTURING

PIEF- GENERAL | -

Clave(s) Obra:

PROYECTO / *PROJECT : GENERAL*

	Elemento u Operación a Controlar *Part or Operation to be Controlled*			Tipo de Control *Control Type*							Registros *Records*	
Item *Item*	**Código** *Code*	**Denominación** *Designation*	**Suministrador** *Supplier*	**Tipo** *Type*	**Fai** *Fai*	**Serie** *Routine*	**Especificación de Control** *Control Specification*	**Responsable** *Responsible*	**Frecuencia** *Frequency*	**Presencia Cliente** *Customer Presence*	**Documento** *Document*	**Entrega Cliente** *Delivery to Customer*
30.9		Armar y soldar bastidor/ *assembly and weld bogie frame 1 step*	C.A.F. (Div.III)			I	Ficha de control/ *Control file*	F	100%		Ficha de control/ *Control file*	
30.10		Armar y soldar bastidor/ *assembly and weld bogie frame 2 step*	C.A.F. (Div.III)			I	Ficha de control/ *Control file*	F	100%		Ficha de control/ *Control file*	
30.11		Enderezar bastidor de bogie/*Straighten bogie frame*	C.A.F. (Div.III)			I	Ficha de control/ *Control file*	F	100%		Ficha de control/ *Control file*	
30.12		Armar y soldar soportes en bastidor/ *Assembly and weld bogie frame supports*	C.A.F. (Div.III)			I	Ficha de control/ *Control file*	F	100%		Ficha de control/ *Control file*	
30.13		Verificación de soldaduras / *Weds inspection*	C.A.F. (Div.III)			I	Visual s/N-10.04-BZ-02	F	100%		Gama Fabricación Ficha de Control	
						I	Partíc.magnétic. s/N-10.04-BZ-03	C	(1)		planilla/*control sheet*	Si
						I	Ultrasonidos s/N-10.04-BZ-08	C	(1)		planilla/*control sheet*	Si
(*)												
30.14		Verificación del tratamiento térmico/*Stress relieving treatment verification*	C.A.F. (Div.III)			I	planilla/*control sheet*	C	100%		planilla/*control sheet*	Si
30.15		Verificación dimensional de bastidor mecanizado/ *Dimensional verification after machining*	C.A.F. (Div.II)			I	planilla/*control sheet*	C	5 primeros + luego 10%		planilla/*control sheet*	Si
30.16		Verificación de bastidor pintado/ *Bogie frame painting control*	C.A.F. (Div.IV)			I	planilla/*control sheet*	C	100%		planilla/*control sheet*	Si
40.		**FABRICACIÓN ACABADO CAJA/ *CARBODY SHELL FINISHING ASSEMBLY***										
40.1		**Proceso de pintura/ *Painting process***										
40.1.1		Homologación de personal/*Personel cualification*	C.A.F. (Div.IV)				P-10.03-BZ	s/ P-10.03-BZ	s/P-10.03-BZ		según P-10.03-BZ	

PLAN DE INSPECCION Y ENSAYOS DE FABRICACION

TEST AND INSPECTION PLAN FOR MANUFACTURING

PIEF- GENERAL | -

Clave(s) Obra:

PROYECTO / *PROJECT : GENERAL*

	Elemento u Operación a Controlar *Part or Operation to be Controlled*			Tipo de Control *Control Type*							Registros *Records*	
Item *Item*	**Código** *Code*	**Denominación** *Designation*	**Suministrador** *Supplier*	**Tipo** *Type*	**Fai** *Fai*	**Serie** *Routine*	**Especificación de Control** *Control Specification*	**Responsable** *Responsible*	**Frecuencia** *Frequency*	**Presencia Cliente** *Customer Presence*	**Documento** *Document*	**Entrega Cliente** *Delivery to Customer*
40.1.2		Homologación de materiales y proceso/ *Products and processes homologation*	C.A.F. (Div.IV)				P-10.03-BZ	s/ P-10.03-BZ	s/P-10.03-BZ		según P-10.03-BZ	
40.1.3		Control de proceso/ *Process control*	C.A.F. (Div.IV)			I	Ficha de control/ *Control file*	F	x %		Ficha de control/ *Control file*	
40.1.4		Verificación de la caja pintada/*Cardody shell painting control*	C.A.F. (Div.IV)			I	planilla/*control sheet*	F / C	100%		planilla/*control sheet*	Si
40.2		Equipos B.B/ *Under frame equipments*	C.A.F. (Div.IV)			I	Ficha de control/ *Control file*	F	x %		Ficha de control/ *Control file*	
40.3		Instalación eléctrica B.B./ *Under frame cabling*	C.A.F. (Div.IV)			I	Ficha de control/ *Control file*	F	x %		Ficha de control/ *Control file*	
40.4		Instalación neumatica/ *Pneumatic installation*	C.A.F. (Div.IV)			I	Ficha de control/ *Control file*	F	x %		Ficha de control/ *Control file*	
40.5		Aislamientos/ *Isolating materials*	C.A.F. (Div.IV)			I	Ficha de control/ *Control file*	F	x %		Ficha de control/ *Control file*	
40.6		Instalación eléctrica interior/ inner cabling installation	C.A.F. (Div.IV)			I	Ficha de control/ *Control file*	F	x %		Ficha de control/ *Control file*	
40.7		Piso y recubrimiento/ *Floor and pavement*	C.A.F. (Div.IV)			I	Ficha de control/ *Control file*	F	x %		Ficha de control/ *Control file*	
40.8		Lunas y ventanas/ windscreen and windows	C.A.F. (Div.IV)			I	Ficha de control/ *Control file*	F	x %		Ficha de control/ *Control file*	
40.9		Puertas/ doors	C.A.F. (Div.IV)			I	Ficha de control/ *Control file*	F	x %		Ficha de control/ *Control file*	
40.10		Revestimientos/ *Interior panels*	C.A.F. (Div.IV)			I	Ficha de control/ *Control file*	F	x %		Ficha de control/ *Control file*	
40.11		Armarios eléctricos/ *Electric cabinets*	C.A.F. (Div.IV)			I	Ficha de control/ *Control file*	F	x %		Ficha de control/ *Control file*	
40.12		Pupitre cabina	C.A.F. (Div.IV)			I	Ficha de control/ *Control file*	F	x %		Ficha de control/ *Control file*	
40.13		Asientos y pasamanos/ *Seats and handrails*	C.A.F. (Div.IV)			I	Ficha de control/ *Control file*	F	x %		Ficha de control/ *Control file*	

	Elemento u Operación a Controlar *Part or Operation to be Controlled*			Tipo de Control *Control Type*							Registros *Records*	
Item *Item*	**Código** *Code*	**Denominación** *Designation*	**Suministrador** *Supplier*	**Tipo** *Type*	**Fai** *Fai*	**Serie** *Routine*	**Especificación de Control** *Control Specification*	**Responsable** *Responsible*	**Frecuencia** *Frequency*	**Presencia Cliente** *Customer Presence*	**Documento** *Document*	**Entrega Cliente** *Delivery to Customer*
40.14		Enganches/ *couplers*	C.A.F. (Div.IV)			I	Ficha de control/ *Control file*	F	x %		Ficha de control/ *Control file*	
40.15		Estribos y faldones/ *Step-board and skirts*	C.A.F. (Div.IV)			I	Ficha de control/ *Control file*	F	x %		Ficha de control/ *Control file*	
40.16		Inscripciones interiores/ inner stickers	C.A.F. (Div.IV)			I	Ficha de control/ *Control file*	F	x %		Ficha de control/ *Control file*	
40.17		Inscripciones exteriores/*outer stickers*	C.A.F. (Div.IV)			I	Ficha de control/ *Control file*	F	x %		Ficha de control/ *Control file*	
40.18		**Coche motor terminado**: Inspección a primer artículo/ ***Finished motor car:*** *Fai*	C.A.F. (Div.IV)			I	plano, especificaciones, instrucciones FAI	C	FAI	A	Informe FAI/ *Fai report*	
40.19		**Coche remolque terminado**: Inspección a primer artículo/ ***Finished trailer car:*** *Fai*	C.A.F. (Div.IV)			I	plano, especificaciones, instrucciones FAI	C	FAI	A	Informe FAI/ *Fai report*	
50		**FABRICACIÓN ACABADO BOGIE/ BOGIE *FINISHING ASSEMBLY***										
50.1		Montaje tubería neumática/ *Pneumatic piping assembly*	C.A.F. (Div.IV)			I	plano	F	100%		Ficha de control/ *Control file*	
50.2		Montaje equipo freno/ *Brake equipment assembly*	C.A.F. (Div.IV)			I	plano	F	100%		Ficha de control/ *Control file*	
50.3		Montaje de bastidor sobre eje (suspensión primaria)/ *Wheelset assembly (primary suspension)*	C.A.F. (Div.IV)			I	plano	F	100%		Ficha de control/ *Control file*	
50.4		Montaje suspensión secundaria/ *Secondary suspension airbag assembly*	C.A.F. (Div.IV)			I	plano	F	100%		Ficha de control/ *Control file*	
50.5		**Pruebas finales/ *Final tests***										

PLAN DE INSPECCION Y ENSAYOS DE FABRICACION

TEST AND INSPECTION PLAN FOR MANUFACTURING

PIEF- GENERAL | -

Clave(s) Obra:

PROYECTO / *PROJECT : GENERAL*

	Elemento u Operación a Controlar *Part or Operation to be Controlled*			Tipo de Control *Control Type*							Registros *Records*	
Item *Item*	**Código** *Code*	**Denominación** *Designation*	**Suministrador** *Supplier*	**Tipo** *Type*	**Fai** *Fai*	**Serie** *Routine*	**Especificación de Control** *Control Specification*	**Responsable** *Responsible*	**Frecuencia** *Frequency*	**Presencia Cliente** *Customer Presence*	**Documento** *Document*	**Entrega Cliente** *Delivery to Customer*
50.6		Verificación del eje montado/ *Wheelset verification*	C.A.F. (Div.II)			I	planilla/*control sheet*	F,C	100%		planilla/*control sheet*	
50.7		Pruebas neumáticas/ *Pneumatic tests*	C.A.F. (Div.IV)			I	planilla/*control sheet*	F,C	100%		planilla/*control sheet*	
50.8		Verificación final de pintura/ *Final painting verification*	C.A.F. (Div.IV)			I	planilla/*control sheet*	F,C	100%		planilla/*control sheet*	
50.9		Verificación de la resistencia eléctrica/ *Electric resistance verification*	C.A.F. (Div.IV)			I	planilla/*control sheet*	F,C	100%		planilla/*control sheet*	
50.10		Identificación de elementos/ *Parts identification*	C.A.F. (Div.IV)			I	planilla/*control sheet*	F,C	100%		planilla/*control sheet*	
50.11		Verificación de bogie bajo prensa/ *Under press bogie verification*	C.A.F. (Div.IV)			I	planilla/*control sheet*	F,C	100%		planilla/*control sheet*	
50.12		Rodaje de bogie/ *bogie running*	C.A.F. (Div.IV)			I	planilla/*control sheet*	F,C	100%		planilla/*control sheet*	

LEYENDA / *LEGEND*

Tipo de Control / *Control Type*
O : Origen / *Supplier factory*
I : Interna / *Internal*

Responsable / *Responsible*
F : Fabricación / *Manufacturing*
C : Calidad / *Quality*
T : O. Técnica / *Engineering*
S : Suministrador / *Supplier*

Presencia Cliente / *Customer Presence*
R : Revisión registros / *Records review*
A : Punto de Aviso / *Witness point*
E : Punto de Espera / *Hold point*

PLAN DE PRUEBAS Y ENSAYOS FINALES

FINAL TEST AND INSPECTIONS

PYEF- GENERAL —

Clave(s) Obra:

PROYECTO / *PROJECT : GENERAL*

	Elemento u Operación a Controlar *Part or Operation to be Controlled*			Tipo de Control *Control Type*							Registros *Records*	
Item *Item*	**Código** *Code*	**Denominación** *Designation*	**Suministrador** *Supplier*	**Tipo** *Type*	**Fai** *Fai*	**Serie** *Routine*	**Especificación de Control** *Control Specification*	**Responsable** *Responsible*	**Frecuencia** *Frequency*	**Presencia Cliente** *Customer Presence*	**Documento** *Document*	**Entrega Cliente** *Delivery to Customer*
		Ensayos en factoría / *Tests at standstill*										
1	—	Gálibo / *C ar clearances*	CAF (div. IV)	I		I	Especificación de ensayo / *T est spec.*	F	Tipo / *Type* + 100%	—	Hoja de medición y control / *record sheet*	si / *yes*
2	—	Peso / *Weighing*	CAF (div. IV)	I			Especificación de ensayo / *Test spec.*	F	Tipo / *Type*	—	Hoja de medición y control / *record sheet*	si / *yes*
3	—	Estanqueidad de instalaciones de aire comprimido / *Test for overall air-tightness and operation of compressed air equipment*	CAF (div.IV)	I		I	Especificación de ensayo / *Test spec.*	F	Tipo / *Type* + 100%	—	Hoja de medición y control / *record sheet*	si / *yes*
4	—	Equipo de freno / *brake test at standstill*	CAF (div.IV)	I		I	Especificación de ensayo / *Test spec.*	F	Tipo / *Type* + 100%	—	Hoja de medición y control / *record sheet*	si / *yes*
5	—	Ensayo de estanqueidad (caja y cofres) / *water tightness test (car body and external boxes)*	CAF (div.IV)	I		I	Especificación de ensayo / *Test spec.*	F	Tipo / *Type* + 100%	—	Hoja de medición y control / *record sheet*	si / *yes*
6	—	Ensayos de equipos / *correct operation of assembled equipements*	CAF (div.IV)	I		I	Especificación de ensayo / *Test spec.*	F	Tipo / *Type* + 100%	—	Hoja de medición y control / *record sheet*	si / *yes*
7	—	Rigidez dieléctrica / *dielectric test*	CAF (div.IV)	I		I	Especificación de ensayo / *Test spec.*	F	Tipo / *Type* + 100%	—	Hoja de medición y control / *record sheet*	si / *yes*
8	—	Tierras y Retornos / *earth and return connections*	CAF (div.IV)	I		I	Especificación de ensayo / *Test spec.*	F	Tipo / *Type* + 100%	—	Hoja de medición y control / *record sheet*	si / *yes*
9	—	Carga de baterias / *Battery charging arrangement*	CAF (div.IV)	I			Especificación de ensayo / *Test spec.*	F	Tipo / *Type*	—	Hoja de medición y control / *record sheet*	si / *yes*
10	—	Equipos eléctricos auxiliares / *Running tests on auxiliary electrical equipments and power supliers*	CAF (div.IV)	I			Especificación de ensayo / *Test spec.*	F	Tipo / *Type*	—	Hoja de medición y control / *record sheet*	si / *yes*

PLAN DE PRUEBAS Y ENSAYOS FINALES

FINAL TEST AND INSPECTIONS

PYEF- GENERAL —

Clave(s) Obra:

PROYECTO / *PROJECT :* *GENERAL*

	Elemento u Operación a Controlar *Part or Operation to be Controlled*			Tipo de Control *Control Type*							Registros *Records*	
Item *Item*	**Código** *Code*	**Denominación** *Designation*	**Suministrador** *Supplier*	**Tipo** *Type*	**Fai** *Fai*	**Serie** *Routine*	**Especificación de Control** *Control Specification*	**Responsable** *Responsible*	**Frecuencia** *Frequency*	**Presencia Cliente** *Customer Presence*	**Documento** *Document*	**Entrega Cliente** *Delivery to Customer*
11	—	Prevención de accidentes / *Checks for the prevention of accidents*	CAF (div.IV)	I		I	Especificación de ensayo / *Test spec.*	F	Tipo / *Type* + 100%	—	Hoja de medición y control / *record sheet*	si / *yes*
		Ensayos en linea / *On track test*										
12	—	Ensayo de aceleración / *Acceleration test*	CAF (div.IV)	I			Especificación de ensayo / *Test spec.*	F	Tipo / *Type*		Hoja de medición y control / *record sheet*	si / *yes*
13	—	Prueba de tracción / *Traction performances*	CAF (div.IV)	I			Especificación de ensayo / *Test spec.*	F	Tipo / *Type*		Hoja de medición y control / *record sheet*	si / *yes*
14	—	Inscripción en curva / *Running on curve test*	CAF (div.IV)	I		I	Especificación de ensayo / *Test spec.*	F	Tipo / *Type* + 100%		Hoja de medición y control / *record sheet*	si / *yes*
15	—	Ensayo de freno / *Braking test*	CAF (div.IV)	I			Especificación de ensayo / *Test spec.*	F	Tipo / *Type*		Hoja de medición y control / *record sheet*	si / *yes*
16	—	Resistencia a la tracción / Test for resistance to motion	CAF (div.IV)	I			Especificación de ensayo / *Test spec.*	F	Tipo / *Type*		Hoja de medición y control / *record sheet*	
17	—	Regulación de velocidad / *speed regulation system*	CAF (div.IV)			I	Especificación de ensayo / *Test spec.*	F	Serie/*Routine*		Hoja de medición y control / *record sheet*	si / *yes*
18	—	Comportamiento dinámico / *Dynamic behaviour*	CAF (div.IV)	I			Especificación de ensayo / *Test spec.*	F	Tipo / *Type*		Hoja de medición y control / *record sheet*	si / *yes*
19	—	Equipos de seguridad / *safety systems*	CAF (div.IV)	I		I	Especificación de ensayo / *Test spec.*	F	Serie/*Routine*		Hoja de medición y control / *record sheet*	si / *yes*

PLAN DE PRUEBAS Y ENSAYOS FINALES

FINAL TEST AND INSPECTIONS

PYEF- GENERAL | __

Clave(s) Obra:

PROYECTO / *PROJECT : GENERAL*

	Elemento u Operación a Controlar *Part or Operation to be Controlled*			Tipo de Control *Control Type*							Registros *Records*	
Item *Item*	**Código** *Code*	**Denominación** *Designation*	**Suministrador** *Supplier*	**Tipo** *Type*	**Fai** *Fai*	**Serie** *Routine*	**Especificación de Control** *Control Specification*	**Responsable** *Responsible*	**Frecuencia** *Frequency*	**Presencia Cliente** *Customer Presence*	**Documento** *Document*	**Entrega Cliente** *Delivery to Customer*
20	__	Ruido exterior / *External noise*	CAF (S.I.)	I			Especificación de ensayo / *Test spec.*	F	Tipo / *Type*		Hoja de medición y control / *record sheet*	si / *yes*
21	__	Ruido interior / *Internal noise*	CAF (S.I.)	I			Especificación de ensayo / *Test spec.*	F	Tipo / *Type*		Hoja de medición y control / *record sheet*	si / *yes*
22	__	Climatización / *Ventilation and heating test*	CAF (div.IV)			I	Especificación de ensayo / *Test spec.*	F	Serie/*Routine*		Hoja de medición y control / *record sheet*	si / *yes*
23	__	Operaciones varias (enganche, pantógrafo) / *Multiple operation test (coupling, pantographs…)*	CAF (div.IV)			I	Especificación de ensayo / *Test spec.*	F	Serie/*Routine*		Hoja de medición y control / *record sheet*	si / *yes*
24	__	Otras pruebas eléctricas / *Other electrical parts (IEC1133)*	CAF (div.IV)			I	Especificación de ensayo / *Test spec.*	F	Serie/*Routine*		Hoja de medición y control / *record sheet*	si / *yes*

LEYENDA / *LEGEND*

Tipo de Control / Control Type
O : Origen / Supplier factory
I : Interna / Internal

Responsable / *Responsible*
F : Fabricación / *Manufacturing*
C : Calidad / *Quality*
T : O. Técnica / *Engineering*
S : Suministrador / *Supplier*

Presencia Cliente / *Customer Presence*
R : Revisión registros / *Records review*
A : Punto de Aviso / *Witness point*
E : Punto de Espera / *Hold point*

Nº	TITLE	COMMENTARY
4	**TRAM TESTING AND COMISSIONING**	
4.1.	**DOCUMENT SCOPE**	This clause is only for information.
4.1.1	General Requirements	We will comply.
4.1.2	Test Plan	We will comply. Please see Annex 1.2.3 in order to see a generic Test Plan for CAF vehicles.
4.1.3	Tram Test Categories	We will comply.
4.1.4	Test Certificates	We will comply.
4.1.5	Factory Acceptance Tests (FAT)	We will comply. Comments: Dynamic Tests will be conducted at Edinburgh track in all cases. ➢ Table "FAT: Static Type Tests" Tests "Coefficient of flexibility" (ref: 8.2) will not be conducted in a practical way. Instead CAF has enough tools to simulate and calculate the flexibility parameters. The removal of components described in "Lifting ability" (ref: 8.3) will be checked during the mounting process. Tests described in "Operability and maintainability" (ref: 8.17) will be limited to main or agreed areas. "Contact forces" test mentioned in "Pantograph" (ref:9.12) will be conducted at the sub-supplier's factory. ➢ Table 1 "FAT: Dynamic Type Tests" As mentioned before, Dynamic Tests will be conducted at Edinburgh track in all cases. Testing of the "Thermal Capacity" (ref: 9.4) will be conducted at the sub-supplier's factory. Tests for "Tram Control System" and "Monitoring Equipment" (ref: 9.19 for both cases) could be conducted at CAF's factory.

Use or disclosure of the proposal data is subject to the restrictions noted on the title page of this proposal

		➢ Table 2 “FAT: Static Routine Tests” Regarding “Heating, Ventilation and air-conditioning test” (ref: 8.14.4) mention that openings for the air flows of the equipment will be the same as the ones adopted at the first unit. “Contact forces” test mentioned in “Pantograph” (ref:9.12) will be conducted at the sub-suppliers factory. ➢ Table 3 “FAT:Dynamic RoutineTests” As mentioned before, Dynamic Tests will be conducted at Edinburgh track in all cases. Tests for “Tram Control System” and “Monitoring Equipment” (ref: 9.19 for both cases) could be conducted at CAF’s factory.
4.1.6	Delivery Acceptance Tests (DAT)	Blank Section
4.1.7	Site Commissioning Tests	We will comply.
4.1.8	Re-Testing	We will comply.
4.1.9	Testing Support	We will comply.
4.1.10	System Integration Tests(SIT)	We will comply.
4.1.11	System Acceptance Testing	We will comply.
4.2	**SYSTEMS ACCEPTANCE**	
4.2.1	Document Scope	Noted
4.2.2	General Description and Principles	CAF understands that undertaking the tests shall be an operational function led by Infraco. CAF will provide reasonable input, participation and support to the tests whenever reasonable.
4.2.3	Programme and Risk Register	CAF understands that undertaking the tests shall be an operational function led by Infraco. CAF will provide reasonable input, participation and support to the tests whenever reasonable.

Use or disclosure of the proposal data is subject to the restrictions noted on the title page of this proposal

4.2.4	Pre-Systems Acceptanve Testing (before starting the systems acceptance process)	CAF understands that undertaking the tests shall be an operational function led by Infraco. CAF will provide reasonable input, participation and support to the tests whenever reasonable.
4.2.5	Factory Acceptance Tests (FAT)	CAF understands that undertaking the tests shall be an operational function led by Infraco. CAF will provide reasonable input, participation and support to the tests whenever reasonable.
4.2.6	Site Tests	CAF understands that undertaking the tests shall be an operational function led by Infraco. CAF will provide reasonable input, participation and support to the tests whenever reasonable.
4.2.7	System Acceptance Activities and System Acceptance Tests	CAF understands that undertaking the tests shall be an operational function led by Infraco. CAF will provide reasonable input, participation and support to the tests whenever reasonable.
4.2.8	Operations Staff Training	CAF understands that undertaking the tests shall be an operational function led by Infraco. CAF will provide reasonable input, participation and support to the tests whenever reasonable.
4.2.9	Shadow Running	CAF understands that undertaking the tests shall be an operational function led by Infraco. CAF will provide reasonable input, participation and support to the tests whenever reasonable.
4.2.10	Final System Acceptance Tests in the Operations and Maintenance Phase	CAF understands that undertaking the tests shall be an operational function led by Infraco. CAF will provide reasonable input, participation and support to the tests whenever reasonable.
4.2.11	Emergency Exercise	CAF understands that undertaking the tests shall be an operational function led by Infraco. CAF will provide reasonable input, participation and support to the tests whenever reasonable.
4.2.12	Post Comissioning Test –T1	Blank Section
4.2.13	Introduction	CAF understands that undertaking the tests shall be an operational function led by Infraco. CAF will provide reasonable input, participation and support to the tests whenever reasonable.

Use or disclosure of the proposal data is subject to the restrictions noted on the title page of this proposal

4.2.14	Monitoring and Reporting of Test Performance	CAF understands that undertaking the tests shall be an operational function led by Infraco. CAF will provide reasonable input, participation and support to the tests whenever reasonable.
4.2.15	Performance Test Specification – T2	Blank Section
4.2.16	Introduction	CAF understands that undertaking the tests shall be an operational function led by Infraco. CAF will provide reasonable input, participation and support to the tests whenever reasonable.
4.2.17	Monitoring and Reporting of Test Performance	CAF understands that undertaking the tests shall be an operational function led by Infraco. CAF will provide reasonable input, participation and support to the tests whenever reasonable.
4.2.18	Pre-Operations Test Specification – T3	CAF understands that undertaking the tests shall be an operational function led by Infraco. CAF will provide reasonable input, participation and support to the tests whenever reasonable.
4.2.19	Introduction	CAF understands that undertaking the tests shall be an operational function led by Infraco. CAF will provide reasonable input, participation and support to the tests whenever reasonable.
4.2.20	Overview	CAF understands that undertaking the tests shall be an operational function led by Infraco. CAF will provide reasonable input, participation and support to the tests whenever reasonable. For a speed of 70km/h, the average lateral acceleration measured in our previous project of Velez-Malaga is of 0.2 m/s2. For a speed of 70km/h, the average vertical acceleration measured in our previous project of Velez-Malaga is of 0.3 m/s2. It is important to note that comfort levels depend also on the conditions of the track.
4.2.21	Monitoring and Reporting of Test Performance	CAF understands that undertaking the tests shall be an operational function led by Infraco. CAF will provide reasonable input, participation and support to the tests whenever reasonable.
4.2.22	Network Performance Test Specification – T4	Blank section

Use or disclosure of the proposal data is subject to the restrictions noted on the title page of this proposal

4.2.23	Introduction	CAF understands that undertaking the tests shall be an operational function led by Infraco. CAF will provide reasonable input, participation and support to the tests whenever reasonable.
4.2.24	Overview of Network Performance Test	CAF understands that undertaking the tests shall be an operational function led by Infraco. CAF will provide reasonable input, participation and support to the tests whenever reasonable.
4.2.25	Pass Criteria	CAF understands that this clause is out of its scope. However CAF shall support the Infraco and the Operator shall it be required.
4.2.26	Special Demonstrations	CAF understands that undertaking the tests shall be an operational function led by Infraco. CAF will provide reasonable input, participation and support to the tests whenever reasonable.
4.2.27	Assumptions and Exclusions	CAF understands that this clause is out of its scope. However CAF shall support the Infraco and the Operator shall it be required.
4.2.28	Monitoring and Reporting of Test Performance	CAF understands that undertaking the tests shall be an operational function led by Infraco. CAF will provide reasonable input, participation and support to the tests whenever reasonable.
4.2.29	Network Performance Test Timetable	CAF understands that undertaking the tests shall be an operational function led by Infraco. CAF will provide reasonable input, participation and support to the tests whenever reasonable.
4.2.30	Network Reliability Test Specification – T5	Blank Section
4.2.31	Introduction	CAF understands that undertaking the tests shall be an operational function led by Infraco. CAF will provide reasonable input, participation and support to the tests whenever reasonable.
4.2.32	Overview	CAF understands that undertaking the tests shall be an operational function led by Infraco. CAF will provide reasonable input, participation and support to the tests whenever reasonable.

Use or disclosure of the proposal data is subject to the restrictions noted on the title page of this proposal
USB00000086_0186

4.2.33	Sub-Systems Subject to Network Reliability Test and Reliability Targets	CAF understands that undertaking the tests shall be an operational function led by Infraco. CAF will provide reasonable input, participation and support to the tests whenever reasonable.
4.2.34	Assumptions and Exclusions	CAF understands that undertaking the tests shall be an operational function led by Infraco. CAF will provide reasonable input, participation and support to the tests whenever reasonable.
4.2.35	Monitoring and Reporting of Test Performance	CAF understands that undertaking the tests shall be an operational function led by Infraco. CAF will provide reasonable input, participation and support to the tests whenever reasonable.
4.2.36	Audit Procedures	CAF understands that undertaking the tests shall be an operational function led by Infraco. CAF will provide reasonable input, participation and support to the tests whenever reasonable.
4.2.37	Services in connection with the Operator	CAF understands that undertaking the tests shall be an operational function led by Infraco. CAF will provide reasonable input, participation and support to the tests whenever reasonable.

Use or disclosure of the proposal data is subject to the restrictions noted on the title page of this proposal
USB00000086_0187

1.2.4 TENDER VARIANTS

1.1. NIGHT PARTITION

Due to bidirectional driving, two doors per tram have been foreseen for the night partition option. They will be placed at both ends of car D and in any case, the wheelchair area will be within the operating tram part.

They will be sliding type doors, constructed in glass material.

When not in use, the doors will be folded and stored in both sides of the tram. The night partition will be unfolded by using an upper sliding guide. The door will be manually locked in the centre of the partition.

While in journey, at the non-operating part of the tram, lights will be off and the doors will be blocked in order to avoid people at the platform head towards the tram's non operating part.

Please see drawing Q.22.00.818 for a draft of the night partition.

Use or disclosure of the proposal data is subject to the restrictions noted on the title page of this proposal

1.2.4 TENDER VARIANTS

1.6. PORTABLE CONDUCTOR'S PANIC BUTTON FOR EACH TRAM

This will be a device which will allow the inspector to warn the driver in case of emergency.

This equipment will consist of a portable button (small size, easy to fit in the pocket) and by pressing it, a light will be lit at the cab. This will warn the driver of any emergency situation at the passenger saloon.

Any type of interference with other equipment will be avoided.

Detailed description of the equipment will be supplied in the Project Stage.

Use or disclosure of the proposal data is subject to the restrictions noted on the title page of this proposal

1.2.4 TENDER VARIANTS

1.7 OPTIONAL GUARD.

CAF propose this variant since our current tram projects will include this new and optimised under run protection.

We consider that this design is closer to the design of previous under run protection mounted in UK trams such as, the one on Nottingham Tram.

Find below some drawings showing the equipment:

Normal Operation

Adaptability

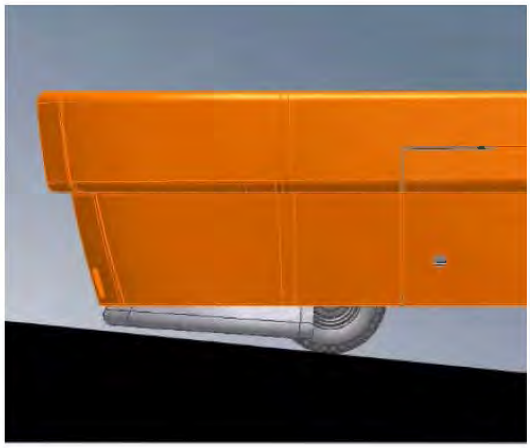

Obstacles

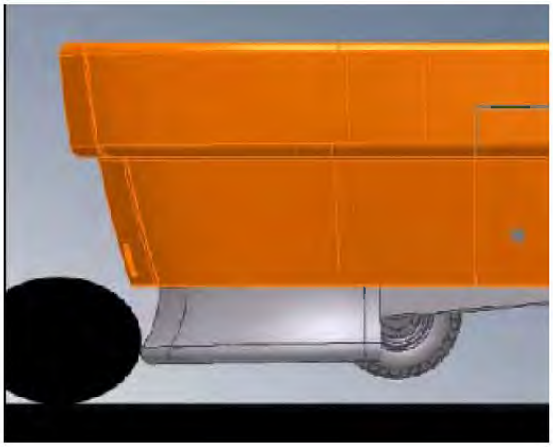

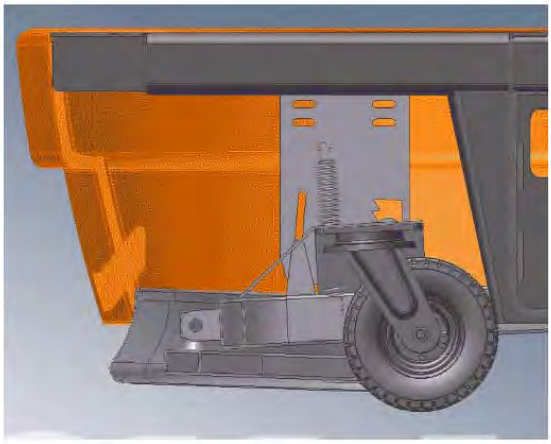

Mechanism

Use or disclosure of the proposal data is subject to the restrictions noted on the title page of this proposal

Edimburgh tramnetwork

QUALITY PLAN

Revision level: Issue 1.00, 27.09.2006 for Tender

Approved:	Antonio Campos	Project Manager	27.09.06	
Checked:	Aitor Galarza	CAF Quality Manager	27.09.06	
Produced:	Javier Ganuza	Project Quality Manager	27.09.06	
	Name	Function	Date	Signature

This is an unpublished work the copyright in which vests in Construcciones y Auxiliar de Ferrocarriles, S.A.. All rights reserved.
The information contained herein is the property of Construcciones y Auxiliar de Ferrocarriles, S.A. No part may be reproduced or used except as authorised by contract or other permission. The copyright and the foregoing restriction on reproduction and use extend to all media in which this information may be embodied.

USB00000086_0191

REVISIONS

Issue	Date	Revised in document	Remarks
1.00	27.09.2006	First Edition	For Tender purpose

DISTRIBUTION

Copy No.	Name	Function / Department

USB00000086_0192

0. CONTENTS

Page

1. INTRODUCTION 5

1.1. PURPOSE 5

1.2. SCOPE 5

2. RELATED DOCUMENTS 5

3. GLOSSARY 5

4. QUALITY SYSTEM 6

4.1. DOCUMENT REVIEW 6

4.2. PROCEDURES 6

4.3. WORK INSTRUCTIONS 6

5. MANAGEMENT RESPONSABILITIES 6

6. TRAINING OF CAF PERSONNEL 6

7. PLANNING 7

7.1. CONTRACT REVIEW 7

7.2. PROJECT TIME PLANS 7

7.3. PROJECT REPORTING 7

7.4. DESIGN & DEVELOPMENT CONTROL 7

7.4.1. GENERAL 7

7.4.2. DESIGN AUTHORITY 7

7.4.3. INTERNAL DESIGN REVIEW 8

7.4.4. EXTERNAL DESIGN REVIEW 8

7.4.5. MONITORING AND ASSESSMENT 8

7.4.6. CONFIGURATION MANAGEMENT & CHANGE CONTROL 8

7.4.7. CONCESSIONS 8

7.5. PURCHASING 8

7.5.1. VENDOR CONTROL 8

USB00000086_0193

7.5.2. PURCHASE ORDERS 9
7.5.3. PURCHASER SUPPLIED MATERIAL 9
7.6. MANUFACTURING CONTROL 9
7.6.1. SPECIAL PROCESSES 9
7.6.2. QUALITY RECORDS 9
7.6.3. INSPECTION AND TEST PLAN 10
7.6.4. PROJECT DOCUMENTATION 10
7.6.5. DOCUMENT CONTROL 11
7.7. IDENTIFICATION AND TRACEABILILTY 11
7.8. INSPECTION 11
7.8.1. PURCHASED MATERIALS RECEIVING INSPECTION 11
7.8.2. IN PROCESS AND FINAL INSPECTION 11
7.9. TESTING 12
7.10. CONTROL OF INSPECTION, MEASURING AND TEST EQUIPMENT 12
7.11. HANDLING, STORAGE, PACKING AND DESPATCH 12
7.12. COMMISSIONING 12
7.13. PURCHASER VERIFICATION 12
7.14. ACCOMMODATION AND ASSISTANCE 13
8. MEASUREMENT, ANALYSIS AND IMPROVEMENT 13
8.1. CUSTOMER SATISFACTION 13
8.2. CONTROL OF NON CONFORMING MATERIAL 13
8.3. QUALITY AUDITS 13
APPENDIX 1 CAF'S PROCEDURES 14

USB00000086_0194

1. INTRODUCTION

1.1 Purpose

The Quality Plan describes the procedures and controls that will be applied by Construcciones y Auxiliar de Ferrocarriles, S.A. (CAF) in order to satisfy the requirements of the Agreement between Edimburgh tramnetwork and CAF to design, manufacture, supply, deliver and maintenance of the tram units

The present document is titled “Quality Plan” and it will subsequently be supported by an specific Test and Inspection Plan described in section 4.5 of the present document.

1.2 Scope

This Quality Plan is mandatory on all stages of the contract from initial review of the contract to delivery, acceptance, maintenance and warranty period of the trains.

2. RELATED DOCUMENTS

ISO 9001/2000	Quality Systems
CAF	Quality Assurance Manual, Vehicles Division
CAF	Procedures Manual
EN287	Approval Testing of Welders for Fusion Welding
EN288	Specification and Approval of Welding Procedures for Metallic Materials

3. GLOSSARY

CAF	Construcciones y Auxiliar de Ferrocarriles, S.A, Spain
Purchaser	Edinburgh tramnetwork, represented by the Chief Mechanical Engineer. Any reference to approvals or submissions to the Purchaser will refer to the Chief Mechanical Engineer.
Quality Plan	A document setting out the Quality Assurance policies and management organisation for the execution of the contract.
Test and Inspection Plan	A document setting out the specific inspections and quality controls to be carried out at every stage of the project.

USB00000086_0195

4. QUALITY SYSTEM

The project will be undertaken within the framework of the quality assurance requirements detailed in the International Standards Organisation specifications ISO 9001.

This Standard is satisfied within UK and Spain by national standards, which are identical to the ISO 9001 standard.

Lloyds, Spain, registration number 950266 registers CAF as satisfying the requirements of UNE EN ISO 9001.

The Quality System of CAF is detailed in the Quality Assurance Manual. This manual contains a Quality Policy Statement signed by the General manager.

The Quality Manager holds copy of this manual.

4.1 Document Review

Prior to submission to the Purchaser this document has been reviewed by and approved by the Project Manager and the Quality Manager.

The document will be reviewed and approved by the Purchaser prior to be issued and distributed.

Any further issue of the present document will follow the same review and approval process.

4.2 Procedures

Documented procedures will be used according to the Quality System to control all the processes employed in every stage of the project.

These procedures are included in the Procedures Manual. A list of these procedures is also stated in Appendix 1.

4.3 Work Instructions

Work instructions will be prepared, if necessary, to detail particular processes, which require further detail than given in the Procedures Manual.

5. MANAGEMENT RESPONSABILITIES

The Quality Policy applicable to the supply of Railway Vehicles has the objective of supplying products and services conforming to our Customer's and legislative requirements.

To achieve this objective, this Quality Management System has been implemented as a device that allows the provision of objective proof in the form of data and information on the efficiency of our organisation and quality of our products. This shall lead to:

- Our Company attaining the desired quality at an optimum cost.
- Our customers increased satisfaction and their trust in our products.

The maintenance of this Quality Management System will allow us to establish "solid bases" on which the required activities shall be developed to promote the continuity and progressive improvement of our Company.

I request each Division and Department involved to strictly comply with the Quality Assurance Programme described in this manual.

Signed: **Andrés Arizkorreta**

General Manager

CAF Procedure P-02.01-BZ " Structure and Organization" describes and establishes in detail the functions and responsibilities for each of the CAF Departments managers.

Within the procedure P-05.05.BZ "Organization, planning and development of the project" it is established CAF appointment and entitlement of the key personal who will constitute the Project team. Additionally to the Project Manager, Quality Project Managerand and Project Lead Engineer, the Enginering department constitutes the different working teams and responsibles for each sub-department in the Technological Area.

6. TRAINING OF CAF PERSONNEL

Comprehensive training programmes are conducted to ensure that all CAF personnel are trained to a level commensurate with the tasks placed on them. The training is conducted for both technical and management skills. Training Programmes are co-ordinated by the Training Department. Where appropriate, personnel need to be certified to carry out specific safety related tasks.

USB00000086_0197

7. PLANNING

7.1 Contract review

A contract review will be undertaken within the 3 months after the Contract signature or as described in other formal specific agreement between CAF and the Customer. The purpose of this review is to ensure that the requirements of the Contract are clearly understood by the project team, and can be achieved effectively and to ensure due emphasis is placed on the Quality requirements by all personnel involved in the Contract.

A record of the Contract Review meeting will be prepared and held within the Project records.

In addition there will be external reviews with the Purchaser or his representatives on contractual matters.

7.2 Project Time Plans

A Project Time Plan will be prepared for the Project and will include relevant input from major sub-contractors. The plan will show the design stages and time scales identifying key events in the programme such as Design Review, Manufacturing, Factory Acceptance Testing, Transport, Delivery, Commissioning and Acceptance testing. This processes are detailed in the related procedures P-05.05.BZ "Organization, planning and development of the project" and P-05.02-BZ "Design Development", P-05.03-BZ "Design verification and validation" and P-05.04 BZ. "Design Review"

The Project Time Plan will be reviewed on a regular basis. These reviews will be documented and all actions arising from the reviews recorded and followed.

7.3 Project Reporting

The Project Manager will report to the Purchaser about the status of the project at every project status meeting.

The Project Manager will meet with the Project Team on weekly basis to review project progress and prepare the project progress meetings.

Senior management meetings will be scheduled on a regular basis.

7.4 DESIGN & DEVELOPMENT CONTROL

7.4.1 General

All stages of the design will be documented. The procedures to be adopted during these stages are specified in the Quality Assurance Manual and supporting documentation.

7.4.2 Design Authority

The Design Authority is responsible for ensuring that the performance of the units satisfies both the design requirements and the contract conditions.

The Design Authority for this contract is the Project Engineer.

7.4.3 Internal Design Review

The Design Review Process will be employed to rigorously assess the suitability of the design for its intended task. Internal Design Reviews will be held at predetermined stages in the design.

The Design Review Process which will be employed is detailed in the procedure:

CAF Design Review P-05.04-BZ

7.4.4 External Design Review

In addition to the Internal Design Review process detailed in paragraph 5.3, External Design Reviews will also be undertaken with the Purchaser or representatives, according to the Contract as detailed in the Project Time Plan, and will be used as the control mechanism to formally approve the Design.

7.4.5 Monitoring and Assessment

Performance monitoring of the rolling stock will be undertaken to record all defects and these will be assessed and categorised.

7.4.6 Configuration management & Change Control

Configuration Management will be adopted to ensure control of all documentation, drawings, hardware and software.

All documentation and software will be formally controlled from the corresponding review.

Automated tools will be used by some parts of the organisation to achieve effective configuration management.

Configuration management process is detailed in the procedure:

- Modifications P-05.01-BZ

7.4.7 Concessions

All concessions will be dealt with according to the contract. This will cover all changes to the contract and must be agreed by both parties before carrying out the change.

7.5 PURCHASING

7.5.1 Vendor Control

The term “Vendor” includes suppliers of proprietary products and sub-contractors who supply products and services specifically tailored to the requirements of this project i.e. non-proprietary.

USB00000086_0199

According to the Quality System all vendors are approved by CAF prior to contracts being placed and a list of approved vendors will be held within the Purchasing Department.

In the Purchased Materials Inspection and Test Plan (within the Test and Inspection Plan) it will be stated the controls imposed over each purchased material.

7.5.2 Purchase Orders

Purchase orders will only be placed with approved vendors according to CAF procedures. Orders need to be approved prior to issue.

7.5.3 Purchaser Supplied Material

Should any material be free issued by the Purchaser for use on the units then it will be held in store under the same conditions and procedures as for all other material required for the Project, except for being labelled as a Purchaser owned property.

7.6 MANUFACTURING CONTROL

Manufacturing will take place in accordance with the relevant documented procedures, a list of which is given in Appendix 1.

Manufacturing control procedures are mandatory on all stages of the manufacturing process and are supplemented by detailed work instructions where required.

Welders employed by CAF in the manufacturing of the bogies and body shells will be assessed and certified in accordance with EN 287. Welding will be undertaken in accordance with the requirements of EN 288. Other processes associated with the manufacture of the vehicle, e.g. the painting process, will employ skilled personnel.

7.6.1 Special Processes

Within the project the below listed “Special Processes” are defined.

The “Special Processes” are those which require a particularly detailed level of work instructions or operator skills in order to ensure that quality, safety and reliability is achieved. As the design advances additional Special Processes may be identified.

Painting Procedure	P-10.03-BZ Checking Painting Processes
Welding Procedure	P-10.04-BZ Checking Welding Processes
Cable Preparation Procedure	P-10.11-BZ Checking Cable Preparation Process

7.6.2 Quality Records

7.6.2.1 General Records

Records of the performance of the Quality System are held in accordance with the requirements of ISO 9001.

General Records include:

- Management Reviews
- Quality Audits and Reviews
- Training
- Calibration
- Procurement
- Manufacturing
- Purchaser Complaints

7.6.2.2 Project Specific Records

In addition to the above recording, project specific information will also be held including but not limited to:

- Contract Review
- Design Reviews
- As Made Drawings
- Test Reports
- Spare Parts
- Manuals

7.6.3 Inspection and Test Plan

According to the Quality System a Test and Inspection Plan will be produced to identify the controls to be applied at all stages of the project.

This Inspection and test Plan will be composed of three different documents:

- Purchased materials Inspection and Testing Plan.
- Manufacturing Inspection and Testing Plan.
- Test Plan (including factory and site testing).

The Test and Inspection Plan will be submitted to the Purchaser for review and approval.

This review allows for input from the Purchaser to indicate activities, which the Purchaser may wish to witness or declare as a mandatory hold point requiring his authorisation to proceed.

7.6.4 Project Documentation

Project specific documentation will be prepared as appropriate in agreement with the Purchaser.

7.6.5 Document Control

Document Control will be undertaken in accordance with the operating procedures of CAF Quality System, within the quality assurance requirements detailed in the ISO 9001.

7.7 IDENTIFICATION AND TRACEABILITY

Part identification will ensure that all components and sub-assemblies are controlled and ensure that only the correct part will be fitted to a higher level assembly.

Major assemblies will be marked with a serial number to ensure traceability of all assembly, inspection and test processes.

7.8 INSPECTION

7.8.1 Purchased Materials Receiving Inspection

The controls imposed to the purchased materials will be stated in the Purchased Materials Inspection and Test Plan (within the Test and Inspection Plan).

Inspection of all purchased materials and products is controlled by applicable procedures which identify the inspection criteria to be applied. Where applicable the procedures may be implemented prior to the material or product leaving the vendor's premises i.e. source inspection.

If the Purchaser requires his own material or product inspection prior to delivery this will be stated on the purchase order and will be highlighted in the Test and Inspection Plan.

Any work found to be unacceptable would be subject to the following courses of action:

- Reject material
- Re-work material
- material accepted by concession

When a decision to accept the material by concession is made then the process detailed in paragraph 6.2 will be applied.

7.8.2 In Process and Final Inspection

The controls imposed to the manufacturing process will be stated in the Manufacturing Inspection and Test Plan (within the Inspection and Test Plan).

Inspections at the appropriate stages defined in the Manufacturing Inspection and Test Plan will be undertaken to the appropriate standards. Evidence of inspection having been carried out will be held within the manufacturing documentation.

USB00000086_0202

7.9 TESTING

Testing will be carried out in accordance with the Test Plan.

The Test Plan will include factory and site tests, type and routine tests.

7.10 CONTROL OF INSPECTION, MEASURING AND TEST EQUIPMENT

Inspection, measuring and test equipment used for product verification is periodically reviewed and calibrated.

The calibration process and the calibration period are stated in the corresponding procedures and standards of the Quality System.

7.11 HANDLING, STORAGE, PACKING AND DESPATCH

Finished products, having been finally inspected will be stored, packed and despatched in such a manner that no deterioration is guaranteed.

The process to manipulate, store, pack and deliver finished products will be conducted according to the corresponding procedures within the Quality System.

7.12 COMMISSIONING

Any commissioning activity will be undertaken in accordance with the corresponding procedures.

7.13 PURCHASER VERIFICATION

The Inspection and Test Plan will indicate activities in which the Purchaser wishes to be involved.

Two levels of Purchaser involvement has been identified:

Witness (W) Defined as a point in the programme, in which has been defined that the Purchaser witness is required. The Purchaser will be informed of the date, time and location of the activity. In case of non-attendance of the Purchaser the activity will continue as scheduled.

Hold (H) Defined as a point in the programme in which has been defined that the Purchaser wish to stop further progress of an activity until he witnessing it. Should the Purchaser fail to attend during a “Hold” activity then the Project Manager will immediately be informed and an appropriate course of action sought.

The Inspection and Test Plan submitted to the Purchaser will specify the planned locations for each activity. The specific official communication for the planned tests will be agreed (fax, email...).

7.14 ACCOMMODATION AND ASSISTANCE

The Purchaser or his representative will be permitted reasonable access to all facilities used during all stages of the Project.

It will be made available the following:

- Minutes of design review meetings
- Drawings and documents required for Design Review
- Manuals, procedures and instructions used within the Project.

8. MEASUREMENT, ANALISYS AND IMPROVEMENT

8.1 CUSTOMER SATISFACTION

These activities will be performed in accordance with P-08.02-BZ procedure.

8.2 CONTROL OF NON-CONFORMING MATERIAL

All non-conforming material will be identified and returned to its place of origin. This may be either external suppliers or internal departments.

The process to document an dispose of non-conforming materials will be conducted according to the corresponding procedures within the Quality System.

8.3 QUALITY AUDITS

Regular internal quality audits are conducted within the Quality System in accordance with the operating procedure:

- Internal Audits P-18.01-BZ

The Purchaser may wish to undertake audits. The Project Manager will provide facilities and assistance to allow such audits to take place at CAF or at his subcontractor's venues.

The Project Quality Manager will address actions arising from these audits.

APPENDIX 1. CAF'S PROCEDURES. PAGE 1 OF 2

CODE	DESCRIPTION
P-02.01-BZ	STRUCTURE AND ORGANISATION
P-02.02-BZ	SYSTEM REVIEW
P-03.01-BZ	QUALITY PLANNING
P-04.01-BZ	CONTRACT REVIEW
P-04.02-BZ	TENDERS
P-05.01-BZ	MODIFICATIONS
P-05.02-BZ	DESIGN DEVELOPMENT
P-05.03-BZ	DESIGN CHECKING AND VERIFICATION
P-05.04-BZ	DESIGN REVIEW
P-05.05-BZ	ORGANISATION, PLANNING AND DEVELOPMENT OF THE PROJECT
P-06.01-BZ	PROCEDURE PREPARATION AND CHECKING
P-06.02-BZ	DOCUMENT CHECKING
P-07.01-BZ	APPROVING SUPPLIERS
P-07.02-BZ	SUPPLIERS QUALITY SYSTEM AUDITS
P-07.03-BZ	PURCHASE MANAGEMENT OF MAIN EQUIPMENTS
P-07.04-BZ	PURCHASE DOCUMENTS
P-07.07-BZ	CONTINUAL DELIVERY ASSESSMENT
P-08.01-BZ	PRODUCTS SUPPLIED BY THE PURCHASER
P-08.02-BZ	CUSTOMER SATISFACTION MEASUREMENT
P-09.01-BZ	IDENTIFICATION AND TRACEABILITY
P-10.01-BZ	PREPARATION AND PUBLICATION OF PARTS LIST
P-10.02-BZ	CHECKING FINISHED PRE ASSEMBLY AND ASSEMBLY PROCESSES
P-10.03-BZ	CHECKING PAINTING PROCESSES
P-10.04-BZ	CHECKING WELDING PROCESSES
P-10.05-BZ	CHECKING STRUCTURE PROCESSES
P-10.06-Z	CHECKING DOOR-MANUFACTURING PROCESSES
P-10.07-BZ	CHECKING BOILER-SHOP PROCESSES
P-10.08-BZ	IRON/STEEL SURFACE TREATMENT
P-10.09-B	CHECKING FINISHED BOGIE ASSEMBLY PROCESS
P-10.11-BZ	CHECKING CABLE PREPARATION PROCESS

P-10.12-B	CHECKING TUBE MANUFACTURING PROCESS

APPENDIX 2. CAF'S PROCEDURES. PAGE 2 OF 2

CODE	DESCRIPTION
P-10.13-BZ	MAINTENANCE OF MANUFACTURE EQUIPMENTS
P-10.14-B	CHECKING OF MECHANISING PROCESS
P-10.15-B	CHECKING ASSEMBLY PROCESS
P-10.16-BZ	CHECKING ADHESIVE AND SEALING PROCESS
P-11.01-BZ	PLANNING MANUFACTURING QUALITY
P-11.02-BZ	FINAL TESTS AND TRIALS
P-11.03-BZ	INSPECTIONS AND TESTS ON RECEPTION
P-12.01-BZ	CHECKING INSPECTION, MEASURING AND TESTING EQUIPMENT
P-13.01-BZ	INSPECTION AND TEST STATUS
P-14.01-BZ	TREATMENT OF UNSUITABLE PRODUCTS DETECTED DURING MANUFACTURE
P-14.02-BZ	TREATMENT OF UNSUITABLE PRODUCTS AT RECEPTION
P-15.01-BZ	CORRECTIVE ACTIONS
P-16.01-BZ	HANDLING, STORAGE, PACKAGING AND DELIVERY
P-17.01-BZ	QUALITY RECORDS
P-18.01-BZ	INTERNAL AUDITS
P-19.01-BZ	TRAINING
P-20.01-BZ	TREATMENT OF T.A.S. INFORMATION
P-20.02-BZ	TRAINING OF T.A.S. PERSONNEL
P-20.03-BZ	T.A.S. MATERIAL MANAGEMENT
P-20.04-BZ	POST-SALES TECHNICAL ASSISTANCE
P-20.05-BZ	ORGANISATION OF THE POST-SALES TECHNICAL ASSISTANCE
P-21.01-BZ	STATISTICAL METHODS

USB00000086_0206

6A. – MANAGEMENT, ORGANISATION AND KEY PERSONNEL

APPENDIX 7 - ORGANISATION DETAILS

1	Name and nature of your organisation (e.g. company, partnership, joint venture etc.) including: registered number; registered office/principal place of business; website URL; list of shareholders holding more than 3% of capital; nature of business; management structure; list of current directors (detailing home address) and copy of Memorandum and Articles of Association.
	Nature of the organization: Construcciones y Auxiliar de Ferrocarriles, S.A. (CAF). **Registered number:** 20001020-A **Registered office/principal place of business:** J.M. Iturrioz 26, 20200 Beasain, Guipúzcoa, Spain **Website URL:** www.caf.net **List of shareholders holding more than 10% of capital: (**)** Cartera Social, S.A. (*) 24,55% Bilbao Bizkaia Kutxa 15,63% Gipuzkoa Donostia Kutxa 10,99% (*) The shareholders of this company are also employees of the Parent Company. (**) According to Spanish exchange rules, only shareholders holding more than 10% of capital have to be identified. Information about shareholders holding more than 3% and less than 10% is not available. **Nature of business:** CAF is manufacturer of rolling stock and its spare parts. **Management structure:** Please refer to Annex 1 of this section. **List of current directors:** Jose M. Baztarrica - CEO Andrés Arizcorreta - Managing Director (Industrial) Alejandro Legarda - Managing Director (Financial) **Copy of Memorandum and Articles of Association:** Please refer to Annex 2 of this section.
2	Contact name, address, telephone and facsimile numbers and e-mail address
	Antonio Mª Campos Irujo J.M. Iturrioz 26, 20200 Beasain, Guipúzcoa, Spain Tlf.: +34 943 189232

	Fax: +34 943 18929 E-mail: acampos@caf.es
3	Where applicable, the name of your ultimate holding company including: registered number; registered office/principal place of business; website URL; nature of business; list of current directors (detailing home address); list of shareholders holding more than 3% of capital and copies of Memorandum and Articles of Association
	N/A
4	Where applicable, details of any groups of companies to which you belong.
	N/A
5	Provide details of any actual or perceived conflicts of interest and/or commercial sensitivities in providing the required supplies and services to **tie**, and explain how you would intend to deal with any such conflicts and/or commercial sensitivities. Please also take into account any conflicts of interest which may arise as a result of your selection of sub-contractors (if any).

N/A

ANNEX 1 – MANAGEMENT STRUCTURE

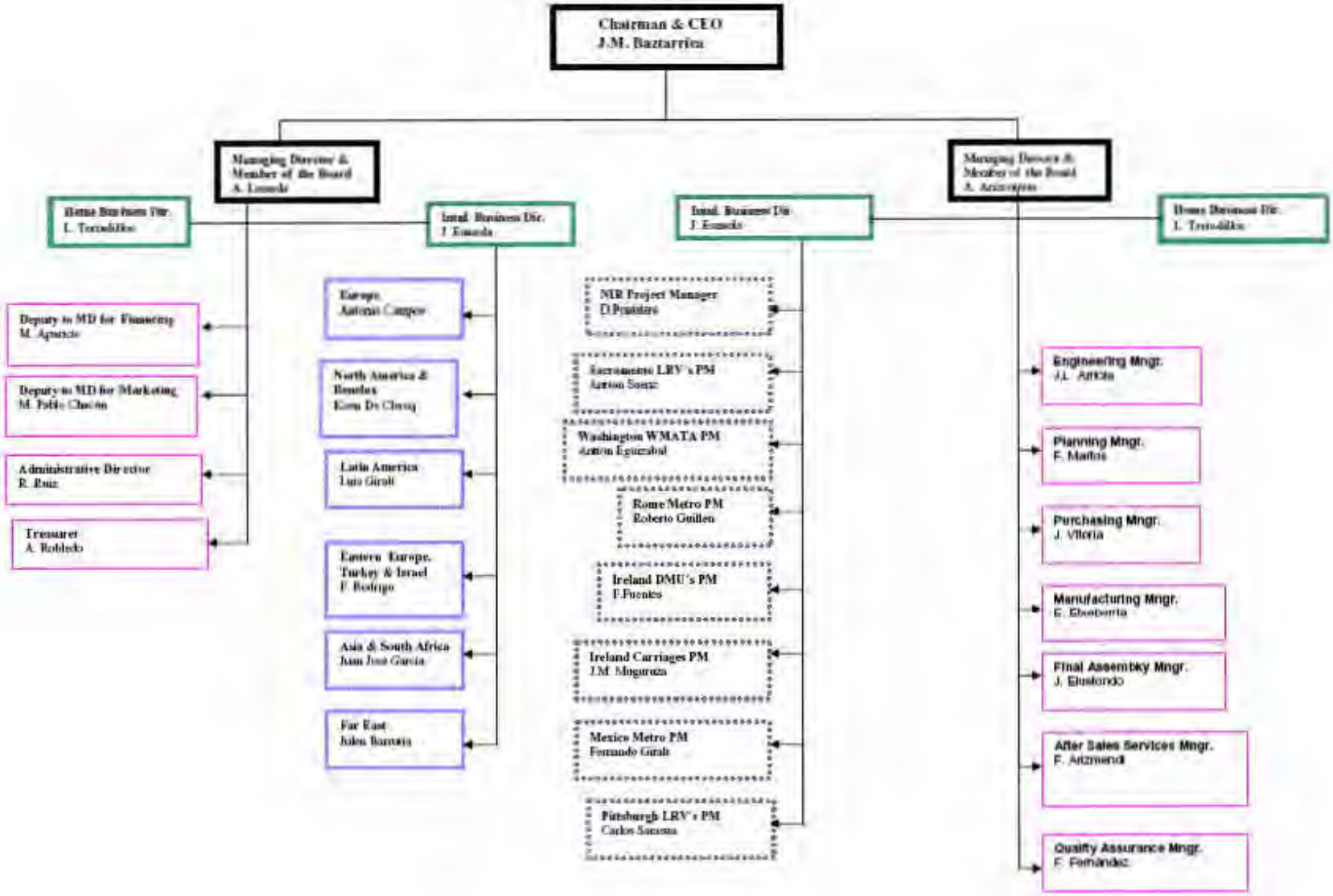
Chairman & CEO
J.M. Baztarrica
Managing Director & Member of the Board
A. Lozanda
Managing Director & Member of the Board
A. Arizmendi
Home Business Dir.
L. Torrealdia
Intnl. Business Dir.
J. Eusada
Intnl. Business Dir.
J. Eusada
Home Business Dir.
L. Torrealdia
Deputy to MD for Financing
M. Aparicio
Deputy to MD for Marketing
M. Pablo Chacón
Administrative Director
R. Ruiz
Treasurer
A. Robledo
Europe
Antonio Campos
North America & Benelux
Eoin De Cleroq
Latin America
Luis Giralt
Eastern Europe, Turkey & Israel
F. Rodrigo
Asia & South Africa
Juan José Garcia
Far East
Julen Barrutia
NIR Project Manager
D.Prieto
Sacramento LRV's PM
Antton Sosa
Washington WMATA PM
Antton Eguzabal
Rome Metro PM
Roberto Guillen
Ireland DMU's PM
F.Fuentes
Ireland Carriages PM
J.M. Moguruza
Mexico Metro PM
Fernando Giralt
Pittsburgh LRV's PM
Carlos Sarasua
Engineering Mngr.
J.L. Artiola
Planning Mngr.
F. Marfos
Purchasing Mngr.
J. Vitoria
Manufacturing Mngr.
E. Eboberria
Final Assembly Mngr.
J. Elustondo
After Sales Services Mngr.
F. Arizmendi
Quality Assurance Mngr.
F. Fernandez

ANNEX 2 – ARTICLES OF ASSOCIATION

CONSTRUCCIONES Y AUXILIAR

DE FERROCARRILES, S.A.

STATUTES

STATUTES

OF

CONSTRUCCIONES Y AUXILIAR DE FERROCARRILES, S.A.

MADRID, JUNE 2003

TABLE OF CONTENTS

CHAPTER I.	**NAME, OBJECT, HEAD OFFICE AND TERM OF THE COMPANY**	4
CHAPTER II.	**CAPITAL STOCK AND SHARES**	6
CHAPTER III.	**ADMINISTRATIVE BODIES OF THE COMPANY**	8
CHAPTER IV.	**OF THE GENERAL MEETING**	9
CHAPTER V.	**OF THE BOARD**	14
CHAPTER VI.	**OF THE ANNUAL ACCOUNTS**	20
CHAPTER VII.	**OF THE DISSOLUTION AND LIQUIDATION**	21
CHAPTER VIII.	**ACCEPTANCE OF THE STATUTES, DISAGREEMENTS AND AUTHORITY**	22
TRANSITORY PROVISIONS		23

STATUTES

OF

CONSTRUCCIONES Y AUXILIAR DE FERROCARRILES, S.A.

CHAPTER I

NAME, OBJECT, HEAD OFFICE AND TERM OF THE COMPANY

Art. 1 Name

Construcciones y Auxiliar de Ferrocarriles, S.A., CAF for short, is a Trading Company which is governed by the present Statutes and by the Law.

Art. 2 Corporate purpose

The purpose of the Company is:

1 Construction, repair, purchase, sale, renting, operation in any form, import, export:

1.1 Of all types of components, equipment, material, fixed or movable, and goods destined for the carrying out of transport activities of any type.

1.2 Of all types of products, goods and elements of the metallurgic, steel, plastic, metalworking and carpentry industries.

1.3 Of all types of industrial machinery, machine tools, public works machinery and agricultural machinery.

1.4 Of all types of products, goods and elements related to the electric, electronic, computer and defence industries and activities.

1.5 Of all types of elements, goods and materials which may have a nature that is auxiliary, complementary or derived from the activities included in the sections above.

2 The carrying out of all types of real-estate activity. The buying and selling of property, as well as its renting or transfer in any form. The carrying out of all types of works and construction projects, both public and private, for its own account or that of a third party. The promotion and sale of

buildings and works of all types, for its own account or that of a third party.

3 The provision of services of all types and, in particular, those of study, consulting, engineering and technical assistance, related with the activities of sections 1 and 2 above.

4 To participate, in the terms that the Board may determine, in the capital of other companies whose company objective is the same as that described in the sections above.

5 The carrying out of all types of industrial, commercial, financial, service, asset, real estate, agricultural, livestock and forestry activity, which have a direct or indirect relation with the activities noted above.

Art. 3 Head office

The Company has its head office in Beasain (Guipuzcoa). The Board is empowered to decide on the creation, cessation or transfer of branches, agencies or delegations.

Art. 4 Term of the Company

The term of the Company will be indefinite, except for the causes of dissolution foreseen in the present Statutes and in Law.

The financial year will coincide with the calendar year.

CHAPTER II

CAPITAL STOCK AND SHARES

Art. 5 Capital Stock

The Capital Stock is TEN MILLION THREE HUNDRED AND EIGHTEEN THOUSAND FIVE HUNDRED AND FIVE EUROS AND SEVENTY FIVE CENTS (10,318,505.75), made up of THREE MILLION FOUR HUNDRED AND TWENTY EIGHT THOUSAND AND SEVENTY FIVE (3,428,075) shares of 3.01 Euros nominal value each, totally subscribed and paid.

The shares will be represented by means of annotations in an account and will be able to gain official admission to a listing both in Spanish Stock Exchanges and those overseas, in accordance with the legislation in force.

Art. 6 Share rules

The shares, on being presented through annotations in the account, will be governed by the ruling legislation in the securities markets and other legal dispositions in force.

Changes in the characteristics of the shares represented by means of annotations in the account, will have to be published, once they have been formalized in agreement with that foreseen in the Company Law and in the governing regulation of the securities market, in the Official Daily Listing in the Register of Companies and in one of the most widely read daily newspapers in Guipuzcoa.

The Company will recognize as a legitimate shareholder those who appear confirmed in the entries of the corresponding accounting books.

When the shares are not fully paid up, this fact will be noted in the appropriate place.

Art. 7 Rights incorporated in each share

Each share, as well as representing an allocated part of the capital stock, confers on its legitimate holder the right to participate in the distribution of profits and the resultant net worth on liquidation, the right to preferential subscription for new shares or bonds convertible into shares, and any other rights that the Law may determine. Every share confers the right to vote.

Shares without the right to vote will not be issued.

In order to attend the General Meeting, it will be necessary to verify the legitimate title, to at least a hundred shares. The shareholders that do not reach the required figure can group themselves together to attend the General Meetings, under one representation.

Art 8. Indivisibility of shares

The shares are indivisible. The joint-holders of a single share will have to designate a single person for the exercising of the shareholders' rights and will be jointly responsible to the Company under the obligations which arise from their role as shareholders. An identical rule will be applied to the other co-titular holders of real rights over shares.

Art 9. Usufruct of shares

In the case of usufruct, the property rests in the remainderman. But the usufructuary will be the title-holder in the eyes of the Law.

Art. 10 Pledge and embargo of shares

In the event of pledge or embargo of the shares, the shareholders' rights correspond to the owner, thus obliging the secured creditor or the attacher to allow the exercise of such rights. If the owner did not comply with the obligation to pass on the dividends, the secured creditor or the attacher will be able to fulfil this obligation himself or, in the case of a pledge, to proceed immediately to the execution of the same.

CHAPTER III

ADMINISTRATIVE BODIES OF THE COMPANY

Art.11 Company statutory bodies

The company's statutory bodies are:

1 The General Meeting

2 The Board

CHAPTER IV

OF THE GENERAL MEETING

Art. 12 The Shareholders' General Meeting

The shareholders, made up in the General Meeting duly called, will decide by majority on the appropriate matters within the jurisdiction of the General Meeting. All the shareholders, including dissident voters and those who have not participated in the meeting, remain subject to the agreements of the General Meeting.

Art. 13 Jurisdiction of the General Meeting. Classes

The General Meeting will decide on matters within its domain in agreement with the Law and the present Statutes, particularly:

1 Appointment and removal of directors

2 Appointment of Auditors

3 Audit the management of the Company and, where appropriate, approve the accounts of the previous year, and decide upon the distribution of profits.

4 Increase and reduction of capital stock, delegating, where appropriate, in the Board, within periods set out by the Law, the ability to notify the date or dates of its execution, who will be able to make use wholly or partly of said delegation, including to refrain from doing so in view of market conditions, of the condition of the Company itself or of some fact or event of special significance that in its opinion might justify such a decision, explaining it at the first General Meeting of shareholders held after the period originally granted for its execution. To delegate in the Board the ability to increase the Capital stock in the terms of article 153.1.b) of the Company Law.

5 Issue of bonds.

6 Modification of the Statutes.

7 Dissolution, merger, split and transformation of the Company.

8 To decide on any matter that may be submitted for their decision by the Board, with which a General shareholders' Meeting will need to be called as quickly as possible, to debate and decide on the specific agreements of those included in this article which may be subjected to its decision, in the event that circumstances or relevant facts arise that affect the company, shareholders or statutory bodies, and, in any case, in the event of a tender offer for the shares issued by the Company, that does not meet with the approval of the Board.

The General Meetings can be ordinary or extraordinary.

Art. 14 Ordinary General Meeting

The Ordinary General Meeting, previously called for the purpose, will meet within the first six months of each year to judge the management of the Company and to approve, where appropriate, the annual accounts and management report of the previous year and the proposed distribution of profits, also being able to decide on the other matters which might feature in the Agenda.

Art. 15 Extraordinary General Meeting

Any General Meeting, other than that outlined in the preceding article, will be an Extraordinary General Meeting.

Art. 16 Convening of the General Meeting

All General Meetings - whether they are ordinary or Extraordinary - will have to be convened by means of an advertisement published in the Daily Listing and at least one of the major daily newspapers in circulation in the province of Guipuzcoa, at least two weeks before the date fixed for the meeting. The advertisement will contain all of the matters which have to be dealt with and will have to make clear the date on which, if it were necessary, the second convening of the General Meeting will take place, with a minimum gap between the two of 24 hours.

In the convening of an Ordinary General Meeting, express mention will be made of the right of any shareholder to obtain from the Company, immediately and free of charge, those documents which are going to be submitted for approval and the auditors' report. When the General Meeting has to decide on the modification of the statutes, the points to be modified will be noted in the convening announcement with due clarity as will the right of each shareholder to examine in the Head Office the full text of the proposed modification and the report on it, as well as the right to ask for said documents to be delivered or sent.

Art. 17 General Meeting

Notwithstanding that mentioned in the previous articles, the Meeting will be considered convened and will be validly constituted to deal with any matter provided that all the Capital stock is present and that the attendees accept unanimously the General Meeting.

Art. 18 Ability and obligation to convene

The Board will be able to call the Extraordinary General Meeting whenever it deems it to be in the Company's interest. It will be obliged to call one when shareholders of at least 5% of the Capital stock ask for one and outline in their petition the matters on which the Meeting must debate and reach

agreement.

In this case, the Meeting will have to be convened within the 30 days following the date on which the directors received notification of the need to call it. The Directors will make up the agenda, necessarily including the matters which have been the object of the petition.

Art. 19 Constitution of the Meeting

The Shareholder' General Meeting, except in the case regulated by Article 20, will be considered validly convened when the shareholders present or represented are holders of at least 25% of the subscribed voting capital. On its second convening the Meeting will be considered valid whatever the Capital holdings of those present.

Art. 20 Special matters

In order to adopt agreements on the issue of bonds, the increase or reduction of capital, the transformation, merger or splitting of the Company and, in general, any modification of the Company statutes, on the first convening the attendance will be required of shareholders present or represented holding at least 50% of the issued voting capital. On the second convening, the attendance of 25% of the aforementioned capital will be sufficient.

When shareholders attend, representing less than 50% of the issued voting Capital, the agreements which this article refers to will only be able to be adopted validly with the vote of the two thirds of the Capital present or represented in the Meeting.

Art. 21 Legitimacy to attend the Meeting

The shareholders who possess a hundred or more shares in the Company will be able to attend the General Meeting and to take part in the discussions with right to speak and to vote. Those who possess fewer shares will be able to group themselves together and give their representation to another shareholder who with them reaches a hundred or more shares.

In order to exercise the right of attendance, the shareholders will have to have the shares written under their name in the appropriate register, 5 days in advance of the date of the General Meeting.

Any shareholder who has the right to attend the General Meeting will be able to have himself represented by means of another person, even though that other person may not be a shareholder. For this, the requirements of the Law must be met.

Art. 22 Public petition of representation

In the event that the Company Directors, the entities holding the shares or any other physical or legal person asks for representation for himself or another and, in general, provided that the petition is carried out in a public

manner - as will be presumed if one person holds the representation of three or more shareholders - the document in which the authority is made clear will have to contain or bear the Agenda in Appendix form, as well as the petition of instructions for the exercising of the right to vote and the indication of the way in which the representative will vote, in the event of not receiving precise instructions. Exceptionally, the representative will be able vote in a different way when circumstances are different and the risk of harming the interests of the party he represents is run. In this case, the representative will have to inform the party he represents immediately, by means of a written communication in which he explains his reasons for voting.

Art. 23 Place and time of the Meeting

The General Meetings are held in the same area as the Head Office of the Company, on the day signalled on the convening notice, but the sessions may be extended over one or more consecutive days, if felt appropriate by the Directors or as a result of a petition by a number of shareholders who represent a quarter of the Capital present or represented in the Meeting. Whatever the number of sessions over which the meeting is held, it will be considered as one, with one set of Minutes being drawn up for all the sessions.

Art. 24 Chairmanship of the Meeting

The General Meeting will be presided over by the Chairman of the Board and, in his absence, by one of the Vice-Chairmen if there were any. Otherwise by a shareholder elected by the other shareholders attending the meeting.

The Secretary of the Board shall act as Secretary of the Meeting, and in his absence the youngest director among those present.

Art. 25 Attendance list

Before starting on the Agenda, the Secretary will draw up a list of attendees, outlining the nature or representation of each one and the number of shares they hold on their account or on behalf of others.

At the end of the list the number of shareholders present or represented will be determined, as well as the value of the capital of which they are holders, with a note on that which belongs to the shareholders with the right to vote, if the Company has issued shares without right to vote.

Art. 26 Right to information

The shareholders will be able to seek, in writing, before the General Meeting, or verbally during the Meeting, the reports or clarifications that they feel necessary about the matters covered in the Agenda. The Directors will be obliged to provide them to them, except in the cases that, in the judgement of the Chairman, the publicity would damage the interests of the Company. This exception will not be possible when the petition is supported by shareholders

holding shares with a combined value of at least a quarter of the Capital of the Company.

Art. 27 Minutes of the General Meeting

The Minutes of the meeting can be approved by the General Meeting itself after it has been held or, failing this, and within a period of two weeks, by the Chairman and two referees, named in the Meeting, one representing the majority and the other the minority. The approved Minutes will have executive effect after the date of its approval. The Secretary of the Board, in his role as the Secretary of the General Meeting, will produce the draft Minutes if this is approved at the end of the Meeting and, otherwise, will aid the Chairman and the referees in the preparation of the Minutes.

This notwithstanding, the Directors will be able to require the presence of a notary to record the Minutes of the General Meeting and they will be required to do it if, with 5 days warning prior to the date of the Meeting, this is asked for by shareholders holding at least 1% of the Capital of the Company. The Notarised Minutes will be considered the Minutes of the General Meeting without the need for the intervention of the Secretary or the Chairman.

CHAPTER V

OF THE BOARD

Art. 28 Of the Board of Directors

The Company will be represented, governed and administered by a Board of Directors, responsible to the General Meeting for its management, and must provide to the General Meeting accounts of its operations.

The responsibility of the members of the Board of Directors to the shareholders and to the Company creditors for the damage which they could cause through acts against the Law or the Statutes or carried out without the care with which their duty must be discharged will be stipulated in the terms set out by the Law.

Art. 29 Composition of the Board of Directors

The Board of Directors will be made up of a minimum of seven members and a maximum of fifteen, freely nominated by the General Meeting. It is not necessary for the Director to also be a shareholder.

The prohibitions and incompatibilities established by law will be in force.

The Directors carry out their duties over a period of five years. They can be re-elected one or more times for an equal period.

The appointment of Directors will have effect from the moment of their acceptance.

Art. 30 Representation of the Company

The representation of the Company, in court and outside, corresponds to the Board of Directors. This notwithstanding, no Director, except the person who has the capacity of Managing Director whatever name this post may be given, will be able to contract on behalf of the Company nor represent it, except under express authority carried out in his favour by the Board of directors.

The representation of the Board of Directors will be extended to all the activities covered in the Company objective.

The re-election of the members of the Board will be carried out on the expiry of the term of each one of them.

Art. 31 Constitution of the Board and adoption of agreements

The Board will be validly constituted when there are present, or represented, at the meeting half of the members plus one. The representation

should be conferred to another Director, by written notice to the Chairman, for each session, with an indication of the voting intentions on each one of the matters which make up the Agenda.

The agreements will be adopted by majority among the Directors present and represented in the session.

Art. 32 Board meetings

The Board will meet when called by its Chairman. The convocation must be at least 5 days before the proposed date for the meeting.
The Board will hold at least four meetings annually.

The Chairman will be obliged to call a Board meeting when this is requested by Directors who represent at least a third of the Statutory Body.

When the meeting is called, the Agenda will be sent to the Board members, and the meeting will in any case remain open so that any Director can introduce into the discussion matters of interest for the Company.

Art. 33 Cooption

If during the term for which Directors have been nominated, vacancies arise, the Board will be able to cover these from among the shareholders until the next General Meeting takes place.

If the vacancy arises in the post of Chairman or Managing Director, the Board will be able to cover the vacancies and nominate, temporarily, a Chairman. It will also be able to appoint a Managing Director with the support of two thirds of the Board members. These appointments will remain in full effect until the next General Meeting.

Art. 34 Powers of the Board

The Board is invested with the fullest powers to administer, govern, and represent the Company in all the matters concerning the activities of the business without any limitations other than those reserved to the knowledge of the General meeting by the Law and the present Statutes. Consequently, it will be able to carry out both administrative acts and acts of rigorous control over all types of goods, securities and rights.

Among the powers conferred on the Board, the following are included not restrictively, but explicitly:

a) To carry out and sign correspondence, to withdraw daily and certified business, declared securities, parcels and charge amounts by postal giro.

b) To draw up and sign cheques to withdraw sums from any banks or companies, including the Bank of Spain and its subsidiaries, in which the

Company may have open current accounts.

c) To draw up, accept, endorse, pay, charge, trade, refer and discount commercial and financial letters of exchange. To guarantee commercial and financial letters of exchange.

d) To open current accounts, savings accounts and credit accounts, including with pledge or mortgage guarantee, and to use them, exercising any rights that belong to the Company. To agree, open, use and cancel credits and loans. To approve account statements. To open security boxes.

e) To make and withdraw deposits in cash and securities.

f) To buy, sell and trade all types of bills and securities.

g) To guarantee credit account policies and other trading operations.

h) To demand, receive and charge from all types of entities, official and private bodies, any amounts of money, interest and bills that may be owed to the Company.

i) To honour any amounts the Company may contract by way of receipts, invoices and letters of payment.

j) To buy and sell raw materials, expendables, materials and stocks.

k) To expedite and receive remittances of materials and stocks, give their approval and file the claims that arise against those who sent them until these are finally resolved.

l) To represent the Company to all types of Ministries, Under-secretaries, Directorate Generals and Authorities, Organisations, State Corporations, Autonomous Communities, Delegations, Councils and lesser Local Bodies, as well as EU organisations, submitting written documents, petitions and reports of any kind, making all appearances required and following all types of proceedings and processes to its ultimate conclusion. To collect in any public bodies quantities or subsidies which correspond or are granted to the Company.

m) To hire and fire Company staff, fixing their remuneration.

n) To intervene in any questions or incidents that arise for labour reasons, appearing at the courts and tribunals or defending themselves before them, to absolve positions, to fix, pay or receive indemnifications and to practise as may be appropriate in labour matters and in defence of the rights of the business.

ñ) To represent the Company before the Customs, railway or navigation companies and transport agencies, filing claims and making despatches of materials.

o) To attend and take part in tenders and competitions of the EU, the State, the Autonomous Communities, and Provincial, Municipal and other Corporations, entities or individuals of any works and supplies for public and private service, to make agreements and improve these, to make up and withdraw provisional and final deposits, to present proposals in accordance with the specifications, to make claims and complaints, to accept where appropriate the adjudication of what is offered on tender and pay its price.

p) To represent the Company before the Treasury and local fiscal authorities, providing any type of inspection, to make claims against the Administration against the tax bases fixed by the Treasury Office and, in general, against any administrative action of a fiscal nature that may affect the Company.

q) To initiate, follow and process to their eventual conclusion all types of proceedings against all types of Authorities and Offices of Public Administration and Economic-Administrative Tribunals, in all degrees and instances of the respective proceedings, conferring, where appropriate, powers on counsel and solicitors with all the faculties that it deems necessary.

r) To initiate, follow and process, as initiator and defendant, any type of civil, criminal, administrative or special proceedings, including process of voluntary jurisdiction, in all degrees and instances, with the ability to compromise, conciliate, desist, ratify and appeal, conferring powers on counsel and solicitors.

To intervene in suspensions of payments, bankruptcies and creditors meetings, exercising any rights that accrue to the Company as creditor.

s) To buy, sell, encumber, mortgage and dispose of all types of goods, assets and property, or negotiable securities, subscribing in the name of the Company the necessary public and private documents.

t) To meet at the setting up of civil or trading companies, or any entities or groups, approving Statutes or regulations, subscribing and issuing shares, company holdings, subscriptions or interests designating the persons that should occupy statutory bodies or accepting appointments made in its favour, and carrying out in general any acts that were necessary for the adequate constitution of the same.

u) To carry out any class of contract of any type or nature, civil, mercantile, administrative, etc. with any entity, organisation or person.

v) To represent the Company before the Mercantile Registry and the Property Registry, as well as before the Register of Industrial or Intellectual Property- and other national and international organisations related to the matter - and any Administrative Registry, initiating the processes which it deems suitable, requesting the appropriate registrations, refuting the ones made and filing any type of appeal.

w) To compromise on any type of goods, assets or property, and

rights.

x) To appoint one or more Director Generals, granting powers which are deemed appropriate.

y) To designate, in the name of the Company, Arbitrators in Arbitration of law or equity, endorsing their judgements, as well as to seek judicial information on the judgements in a manner in keeping with legal procedure.

Art. 35 Of the Chairman

It is the Chairman's duty to call the Board meetings and, when appropriate, of the Executive Committee, if there is one, to draw up, after previous consultation with the Managing Director - or with the Board member that, whatever his title, has received the powers delegated from the Board - the Agenda of the meeting, to oversee the sessions, to allow and withdraw the right to speak of the Board members and the people linked to the Company whose presence has been required, to close discussions, to submit to the vote any question under discussion and to proclaim the outcome of that vote.

The Chairman of the Board will also be Chairman of the General Meetings.

In his absence, one of the Vice-Chairmen will assume his duties.

Art. 36 Of the Managing Director

The Managing Director - whatever the title he holds - is the permanent holder of the functions of representation, government and administration of the Company, who will act under the direction and the agreement of the Board.

His powers will be defined in the delegation agreement that the Board adopts.

Art. 37 Of the Executive Commission

The board, through the agreement of, at least, two thirds of its members, will be able to delegate all or parts of its powers to one or more Executive Commissions.

Any Executive Commission constituted by the Directors named by the Board, will be able to establish the internal rules for its own operation and, among them, those relating to its convocation. So that the Executive Commission is considered validly called, the attendance at the meeting will be required of half of the members that make it up plus one.

Art. 37 bis Board Committees

1. The Board shall have an Auditing Committee. The board shall approve the regulations of this committee, determining its functions and

establishing the procedures that shall be necessary for their execution.

2. The Auditing Committee shall consists of at least three members, who shall be appointed by the Company Executive Board; the majority of the Committee members shall be external of the company.

3. Also, the Board shall appoint a Chairman from the external members of the committee. The chairman post shall not be held for a period longer than four years and each person may be re-elected once a year has passed after dismissal.

4. The Auditing Committee shall adopt decisions by an absolute majority of the participating members who are present or represented at the session.

5. The functions of the Auditing Committee shall be those resulting from the specific Regulation and shall at least include the following:

i) To inform at the General Shareholders Meeting of the questions the shareholders have raised in their competence.

ii) Proposal to the Board for the subjection, to the General Shareholders Meeting, of the appointment of the auditors of external accounts which are referred to in article 204 of the revised text of the Limited Company Law, approved by Royal Legislative Decree 1564/1989, on 22 December.

iii) Supervision of the internal auditing services should such a body exist within the Group of Companies.

iv) Knowledge of the process of financial information and of the Company internal control systems.

v) Relations with the external auditors to receive information regarding those matters which could put at risk the independence of these and any other related to the process of accounts auditing development, as well as those other communications envisaged in the legislation of accounts auditing and in the auditing techniques standards.

Art. 38 Of the secretary

The Secretary will be appointed by the Board without it being necessary for him to be a director.

It is his duty to oversee the books of the Company, to draw up the Minutes of the meetings that its associated bodies hold, and to carry out certifications, with the approval of the Chairman at the request of the legitimate party and to keep the general records.

The Secretary of the Board will also be the secretary of the General Meetings that the Company holds.

Art. 39 Remuneration of the Board

The Board will be remunerated by means of a payment for attendance at the meetings that the Board holds, without prejudice to the incomes that each one of its members might receive for work carried out. As for the level of this remuneration, this will be determined by accepted common practice.

CHAPTER VI

OF THE ANNUAL ACCOUNTS

Art. 40 General Provisions

The Directors of the Company will formulate, within the period three months from the end of the financial year, the annual accounts, the management report, and the proposed distribution of profits. They will also present the accounts and management report consolidated with respect to the subsidiaries of Construcciones y Auxiliar de Ferrocarriles, S.A., as established in the Commercial Code.

The annual accounts will include a Balance Sheet, the Profit and Loss Account and the Directors' report. To this is added the management report.

Art. 41 Final documentation which is submitted to the Ordinary General Meeting

The documents that will have to be at the disposal of the shareholders after the convocation of the General Meeting will be the Director's report, the Balance Sheet, the Profit and Loss Account, the proposed distribution of profits, the management report and the auditors' report.

Any shareholder will be able to ask for a copy of these documents, which the Company shall have to provide him, at the former's expense. In the convocation mention will be made of this right.

Art. 42 Approval of the accounts

The Ordinary General Meeting will approve the accounts or will introduce to them the changes that it deems appropriate, being decided by a majority vote among voting shares whose holders are present or represented.

Art. 43 Distribution of profits

The Company profits, determined in accordance with the Limited Company Law and the Corporation Tax Act, will be distributed in agreement with the following distribution:

1 Endowment to legal reserves, until it reaches its legal limit.

2 Constitution of a voluntary reserve.

3 Endowment for the payment of dividends.

The Board may agree to the payment of an interim dividend, in compliance with the Law.

4 The remuneration of the Board will constitute an expense to the

business.

CHAPTER VII

OF THE DISSOLUTION AND LIQUIDATION

Art. 44 Causes of dissolution

The Company will only be dissolved by the causes which are legally stipulated. The General Meeting will designate the liquidators always in odd numbers.

CHAPTER VIII

ACCEPTANCE OF THE STATUTES, DISAGREEMENTS AND AUTHORITY

Art. 45 Authority

The shareholders are subject to the present Statutes and the differences which might arise between them and the Company will be resolved in the first General Meeting that the Company holds, with the exception of the right of the shareholders to jurisdictional protection. The claimants will write their causes to the Board of Directors or, if appropriate to the liquidators, so that the General Meeting might rule on the claim, always with the exception of the right to the effective protection of judges and courts.

For any disagreement between the shareholders and the Company, with express renunciation to any other authority to which they could correspond, they are both subject to the courts and tribunals of the head office.

TRANSITORY PROVISIONS

First. Until the moment in which that established in the first additional disposition, 5, in the revised text of Company Law is fulfilled, with respect to the representation of shares by means of annotations in account, the following dispositions will be effective:

1. The shares will be bearer and numbered, cut from a registry book, signed by the Directors and dry sealed with the Company seal. These signatures can be made by mechanical printing, in the terms established by the Law.

2. Multiple comprehensive shareholdings can be registered with many shares in each one, with their corresponding number, which will be broken down, at the request of the interested parties, into as many titles as shares represented.

3. In the title of the share the capital sum paid will always be indicated or an indication shall be made that it has been completely paid up.

4. In the event that they are not fully paid, the shares will be nominative until they are fully paid, after which they will convert into bearer shares. While the shares are nominative, they will be represented by provisional vouchers on which will be indicated the full names, or company name of the title-holder as well as those above-mentioned legal requirements. These vouchers, consecutively numbered, will be written in a receipt ledger, in which will be noted subsequent transfers and the constitution of real rights over the shares.

Second. For the purposes foreseen in the second paragraph of Article 21 of the Statutes, and until the first transitory disposition is in force, in order to exercise the right of attendance, the shareholder will have to deposit his shares at least five days before the General Meeting, in the head Office or in the organisations that are posted in the convocation announcement.

Third. As soon as it is thus established by the corresponding rules of development, the amortization of the titles currently existing will be carried out, and these will be substituted by annotations in account in the form and conditions established in the Law.

LEGITIMATION: I, JOSE LUIS MARTINEZ GIL, Notary of Madrid.---------- CERTIFY: That these printed statutes of the Company "CONSTRUCCIONES Y AUXILIAR DE FERROCARRILES, S.A." (CAF) are those figuring in the documents authorised by the Madrid Notary, Mr. Jose Maria Alvarez Vega, on 27 June, 1990, numbered 4,050 of the protocol order; by me, on 26 February, 1990, with number 608 of protocol order; by the Ordizia Notary, Mr. Ignacio Pagola Villar, on 19 July, 1999, with number 1,121 of the protocol order; and by the Bilbao Notary, Mr. Jose Antonio Isusi Ezcurdia, on 21 July, 2003, with number 2,697 of the protocol order, which have been shown to me.----------

Madrid, on the twenty seventh of November of two thousand and three.

There follows the legitimating seal and illegible signature of Jose Luis Martinez Gil.

APPENDIX 8 - STANDARD FORM CV

Name	ALBERTO ALVAREDO ROMERO		
Current Employer	CAF		
Professional Qualifications	INGENIERO SUPERIOR		
Availability	YES		
Relevant Experience to the [Tram Supply Agreement]/[Tram Maintenance Agreement]			
Project	**Role and Responsibility (including identity of employer)**	**From**	**To**
SEVILLE TRAM	PROJECT ENGINEER	2003	2006
VELEZ MALAGA TRAM	PROJECT ENGINEER	2005	2006
MALAGA TRAM	PROJECT ENGENDER	2006	-

APPENDIX 8 - STANDARD FORM CV

Name	JOSE LIUS ARRIOLA TRUEBA		
Current Employer	CAF		
Professional Qualifications	INDUSTRIAL ENGINEER		
Availability	YES		
Relevant Experience to the [Tram Supply Agreement]/[Tram Maintenance Agreement]			
Project	**Role and Responsibility (including identity of employer)**	**From**	**To**
FINLAND EMU	PROJECT MANAGER	1997	2000
SAO PAULO EMU	PROJECT MANAGER	1998	2001
RENFE DMU	PROJECT MANAGER	2001	2003
RENFE HS S/120	PROJECT MANAGER	2001	2003
BRUSSELS METRO	ENGINEERING DEPARTMENT MANAGER	2003	2006

APPENDIX 8 - STANDARD FORM CV

Name	JAVIER GANUZA
Current Employer	CAF
Professional Qualifications	INDUSTRIAL MECHANICAL ENGINEER ISO 9000/2002 CERTIFIED AUDITOR. SPECIFIC ISO QUALITY SYSTEM TRAINING COURSES RECEIVED.
Availability	COMPLETE

Relevant Experience to the [Tram Supply Agreement]/[Tram Maintenance Agreement]

Project	**Role and Responsibility (including identity of employer)**	**From**	**To**
LRVS FOR RT SACRAMENTO, CA, USA	CAF QA PROJECT MANAGER	2000	2003
BOGIES DMU´S FOR NORTHERN IRELAND	CAF QA PROJECT MANAGER	2003	2005
DMU´S INTER CITY CARRIAGES FOR IRELAND	CAF QA PROJECT MANAGER	2004	2006
BOGIES FOR METRO ROME, ITALY	CAF QA PROJECT MANAGER	2003	2006

APPENDIX 8 - STANDARD FORM CV

Name	IBON GARCIA		
Current Employer	CAF		
Professional Qualifications	BACHELOR SCIENCE IN INDUSTRIAL ENGINEERING		
Availability	YES		
Relevant Experience to the [Tram Supply Agreement]/[Tram Maintenance Agreement]			
Project	**Role and Responsibility (including identity of employer)**	**From**	**To**
METROVIAS MAINTENANCE, BUENOS AIRES SUBWAY	MAINTENANCE MANAGER, CAF	1997	1999
CLASS 333, ARRIVA TRAINS	WARRANTY SERVICE MANAGER, CAF	1999	2001
INTERNATIONAL PROJECTS CAF	WARRANTY SERVICE MANAGER, CAF	2001	2004
INTERNATIONAL PROJECTS CAF	MAINTENANCE AND WARRANTY SERVICE MANAGER, CAF	2004	-

APPENDIX 8 - STANDARD FORM CV

Name	JOSE M. MUGURUZA DOMINGUEZ		
Current Employer	CAF		
Professional Qualifications	INDUSTRIAL ENGINEERING INDUSTRIAL ORGANIZATION QUALIFICATION		
Availability	FULL AVAILABILITY		
Relevant Experience to the [Tram Supply Agreement]/[Tram Maintenance Agreement]			
Project	**Role and Responsibility (including identity of employer)**	**From**	**To**
67 CARRIAGES PUSH-PULL FOR IRISHRAIL (IRISH REPUBLIC)	PROJECT MANAGER	2003	2006

APPENDIX 8 - STANDARD FORM CV

Name	DAVID TAYLOR		
Current Employer	CAF		
Professional Qualifications	BTEC- ENGINEERING (MECHANICAL / MANUFACTURE), INSTITUTE OF MOTOR INDUSTRY- ASSOCIATE MEMBER (AMIMI) MINISTRY OF TRANSPORT- VEHICLE EXAMINER CAR, BUS, HGV.		
Availability	AS DIRECTED BY CAF		
Relevant Experience to the [Tram Supply Agreement]/[Tram Maintenance Agreement]			
Project	**Role and Responsibility (including identity of employer)**	**From**	**To**
CAF 2900 DMU's Drogheda, Ireland.	CAF, Warranty engineer / modifications manager.	2003	Present
CAF 333 EMU's Leeds UK.	CAF, Warranty engineer / modifications manager.	2000	2003
CAF LAR (Lantau airport line) AEL and LAL EMU's, Hong Kong.	CAF, Warranty engineer / modifications manager.	1997	2000
CAF Beasain factory, Spain.	CAF, Mechanical engineer.	1995	1997
Landascar (Landrover, Suzuki) Madrid, Spain	Service / workshop manager	1993	1995

3. DRAWING LIST

- 2.050.033 - Albert type coupler
- Cab_desk_proposal_v0 – Cab desk panels
- L.00.480.00 – Motor Bogie Arrangement
- L.00.480.10 – Trailer Bogie Arrangement
- Q.00.072.11 - Capacity Calculation
- Q.00.072.12 - Roof Equipment Arrangement
- Q.00.072.20 - Saloon Lighting
- Q.00.072.28 - Flange Lubrication Mounting
- Q.00.072.45 - Horizontal Curve Inscription
- Q.00.072.46 - Vertical curve inscription
- Q.00.072.62 - Auxiliaries schematic - Car A-B
- Q.00.072.63 - Auxiliaries schematic - Car C
- Q.00.072.64 - Auxiliaries schematic - Car D-F
- Q.00.072.65 - Auxiliaries schematic - Car G-E
- Q.00.072.66 - High Voltage schematic - Car A-B
- Q.00.072.67 - High Voltage schematic - Car C
- Q.00.072.68 -High Voltage schematic - Car D-F
- Q.00.072.69 - High Voltage schematic - Car G-E
- Q.00.072.99 H1 - Bogie Shrouds E-F-C-A Cars
- Q.00.072.99 H2 - Bogie Shrouds E-F-C-A Cars
- Q.16.21.150 - Hydraulic Brake Schematic
- Q.16.87.020 - Cab Equipment Mounting GA Below Windscreen
- Q.19.42.001 - Articulation Arrangement
- Q.20.23.030 - Under-run Protection
- Q.22.00.291 - Stepping Distance

Use or disclosure of the proposal data is subject to the restrictions noted on the title page of this proposal
USB00000086_0244

- Q.22.00.300 - Crane Lifting HVAC
- Q.22.00.301 - Pantograph Assembly. Resting Position Height
- Q.22.00.801 H1- Unit assembly (GA)
- Q.22.00.801 H2 - Unit assembly (GA)
- Q.22.00.810 - Cab Layout
- Q.22.00.811 - Cab exterior design
- Q.22.00.812 H1 - Driver Visibility
- Q.22.00.812 H2 - Driver Visibility
- Q.22.00.813 - Luggage Cupboard
- Q.22.00.814 - Luggage Cupboard
- Q.22.00.815 - Passenger Seat
- Q.22.00.816 - Passenger Information Displays and TFT Screens
- Q.22.00.817 - Weight Distribution Layout
- Q.22.00.818 - Night Partition Door
- Q.22.00.855 - Handholds
- Q.22.00.856 - Vehicle Cameras Layout
- Q.22.72.999 - TPDS Transponder Option For Assembly
- Q.22.93.101 H1 - Gauge Straight, R1000 & R2000
- Q.22.93.101 H2 - Gauge R25, R30, R40, R50 & R70
- Q.22.93.101 H3 - Gauge R90, R100, R200, R300 & R500
- Q.22.93.105 - DKE Tabular format

Use or disclosure of the proposal data is subject to the restrictions noted on the title page of this proposal
USB00000086_0245

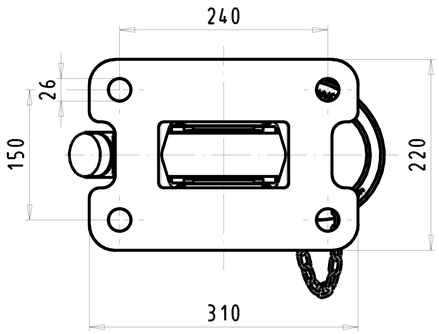

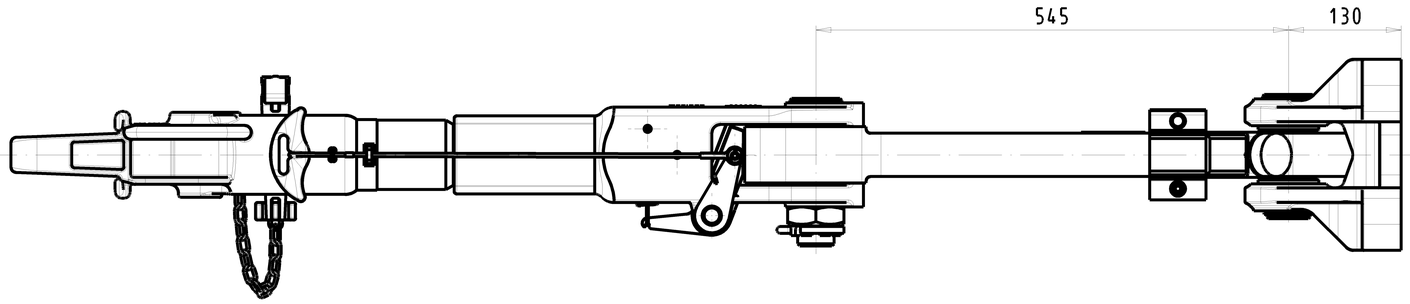

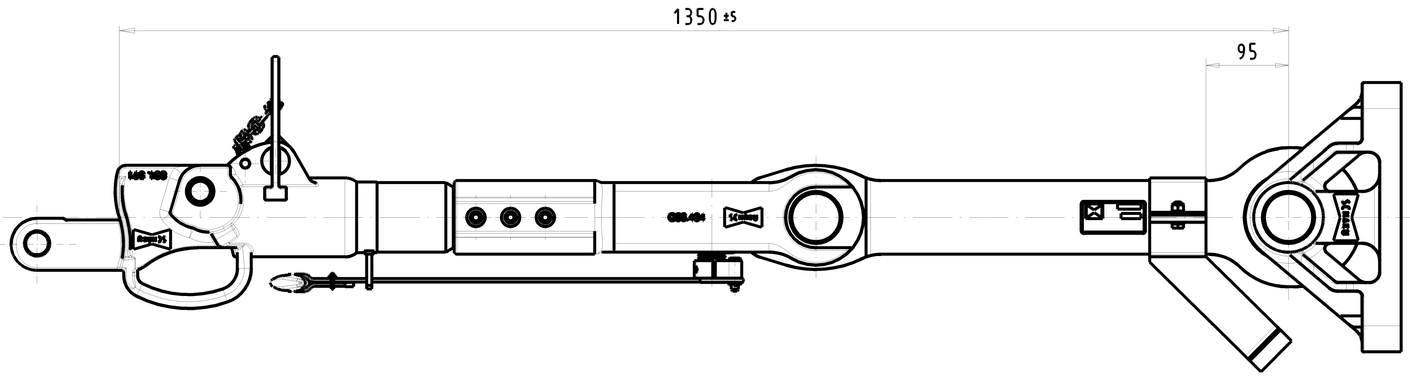

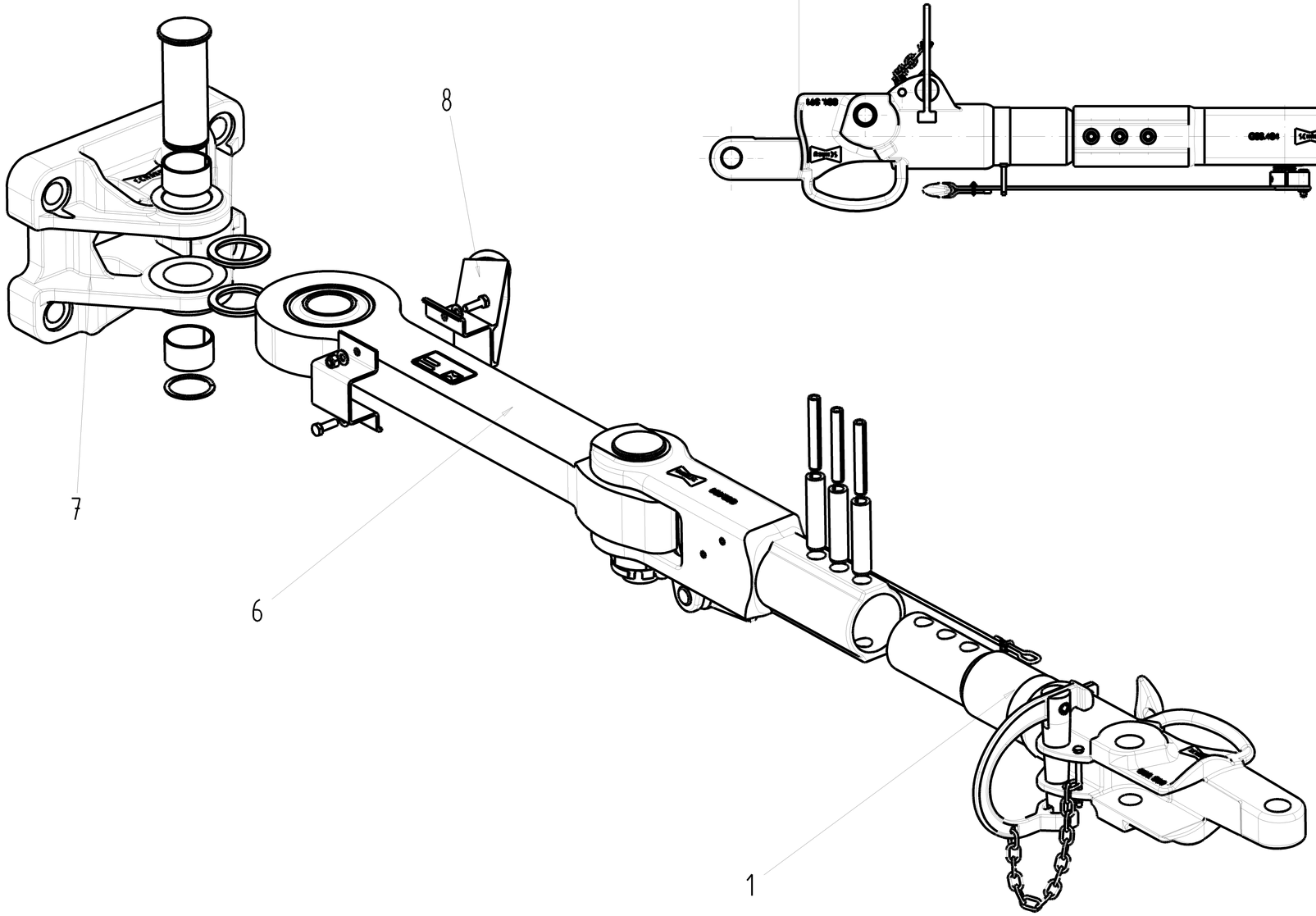

Schutzvermerk nach DIN 34 beachten.

ZEICHNUNG DARF NUR IM CAD-SYSTEM GEÄNDERT WERDEN

Verwendbar für:

Zust.	Änderung	Datum	Name
A	058-903466	01.02	KEM
B	058-903561	02.02	KEM
C	058-903934	04.02	KEM
D	058-904040	04.02	KEM

Ausgabe
Datum

Allgemeintoleranzen

Oberflächen DIN ISO 1302

Maßstab 1:5 — 74,5 kg

	Datum	Name
Bearb.	22.02.01	Kontetzki
Gepr.	06.05.02	Lindner
Norm.		

Albertkupplung

coupler type "ALBERT"

980885

Scharfenbergkupplung GmbH Co. KG Salzgitter

Urspr.

2.050.033

Blatt 01

CAD — IDNR 0904893 — 01 Bl.

Ers. f. — Ers. d.

DIN A2

EDINBURGH TRAM - CAB DESK PROPOSAL

Scope

This document is intended to identify the different elements that are to be implemented in the Cab desk for the new vehicles for the Edinburgh Tram.

For the location of these elements in the Cab desk, it has been followed the indications found in the ER's 3.2, Section 24 Trams, 24.14 Tram Controls:

> *The following controls shall be conveniently placed for the driver's free hand when the Tram is in motion:*
> ***First priority:***
> - *Audible warnings (bell, horn)*
> - *Track brake (in addition to the emergency brake on the driver's controller)*
> - *Indicators*
> - *Pantograph emergency drop*
>
> ***Second priority:***
> - *Manual sand (in addition to the automatic sanding system)*
> - *Windscreen washer and wiper controls*
> - *Headlamp dip/main beam*
> - *Panic Alarm*
> - *Tram punctuality display against timetable or headway*
>
> *The following controls shall be conveniently placed for use when the Tram is at a Tram stop:*
> - *Door controls*
> - *Rear-view normal mode push-button*
> - *Tram Ready To Start (junction calling when at a Tramstop close to the junction)*
> - *Tram punctuality display against timetable or headway*
> - *Hazard and marker lights*
> - *Air-conditioning and temperature controls*
> - *Saloon heating control*
> - *Fault reset push-button*
> - *Public Address controls*
> - *Radio controls*
> - *Cab light switch*
> - *Saloon lighting*
> - *Pantograph control*
> - *Windscreen demister*

The following table shows the different cab controls and indicators, together with a brief description. The number associated to each component can be used to get a quick reference to the graphic information which can be found at the end of this same document, in order to facilitate its location within the Cab desk.

Nº	Elemento	Descripción
1	Alumbrado cabina	Pulsador mantenido con piloto. Activa/desactiva la iluminación de cabina. La lámpara del pulsador ilumina cuando la luz de cabina está apagada y se apaga cuando ésta se enciende.
	Cab light switch	*Illuminated pushbutton maintained action.* *Cab light connection/disconnection Pushbutton lamp is on when the cab light is switch off, and it is off when the cab light is switch on.*
2	Alumbrado pupitre	Pulsador mantenido con piloto. Activa/desactiva el encendido de las luces del pupitre y del panel de térmicos.
	Desk light switch	*Illuminated pushbutton maintained action.* *Connection/disconnection of the Desk and circuit breaker cabinet lights*
3	Conexión disyuntor	Pulsador no mantenido. Con pantógrafo arriba conecta el disyuntor.
	HSCB connection	*Pushbutton momentary action.* *HSCB connection with pantograph up.*
4	Desconexión disyuntor	Pulsador no mantenido. Desconecta el disyuntor.
	HSCB disconnection	*Pushbutton momentary action.* *HSCB disconnection.*
5	Subir pantógrafo	Pulsador no mantenido. Activa la subida del pantógrafo.
	Rise pantograph	*Pushbutton momentary action.* *Pantograph rise activation.*
6	Bajar pantógrafo	Pulsador no mantenido. Activa la bajada del pantógrafo.
	Lower pantograph	*Pushbutton momentary action.* *Pantograph down activation.*
7	Luneta térmica	Pulsador mantenido con piloto. Activa/desactiva la luneta térmica.
	Windscreen demister	*Illuminated pushbutton maintained action.* *Windscreen demister connection/disconnection.*
8	Arenero	Pulsador no mantenido. Acciona los eyectores de arena en los ejes delanteros según el sentido de marcha.
	Manual sanding	*Pushbutton momentary action.* *Sand ejector activation of forward direction axle.*
9	Alumbrado sala	Pulsador no mantenido con piloto. Activa/desactiva el encendido de la iluminación de la sala de pasajeros.
	Saloon light	*Illuminated pushbutton momentary action.* *Saloon light connection/disconnection*
10	Micrófono	
	Microphone	
11	Velocímetro	Velocímetro en Km/h y mph
	Speedomoter	*Speedometer in Km/h and mph*
12	Control limpiaparabrisas	Conmutador de 4 posiciones con pulsador. Acciona el limpiaparabrisas. Al presionar el conmutador hacia adentro, el motor de lava parabrisas produce vertido de agua en la luna. “0”: Reposo “INT”: Intermitente “1”: Velocidad lenta “2”: Velocidad rápida

	Windscreen wiper control	*Selector switch – 4 positions + pushbutton momentary action.* *Windscreen wiper control:* *"0": Off* *"INT": intermittent activation* *"1": Continuous slow* *"2": Continuous fast* *"Push": Operates wipers and windscreen washers for as long as it is held down.*
13	Luces largas	Pulsador no mantenido con piloto. Activa/desactiva el encendido de las luces largas.
	Headlamp main beam	*Illuminated pushbutton momentary action.* *Headlamp main beam switched on/off*
14	Luces cortas	Pulsador no mantenido con piloto. Activa/desactiva el encendido de las luces cortas.
	Headlamp dip	*Illuminated pushbutton momentary action.* *Headlamp dip switched on/off*
15	Luces antinieblas	Pulsador mantenido con piloto. Activa/desactiva el encendido de las luces antinieblas traseras.
	Rear Fog light	*Illuminated pushbutton maintained action.* *Rear fog light switched on/off*
16	Activación Micrófono	Pulsador no mantenido. Al pulsar permite hablar por el micrófono.
	Microphone activation	*Pushbutton momentary action.* *Meanwhile it is pushed the microphone is enabled.*
17	Intermitente derecha	Pulsador mantenido con piloto. Activa/desactiva el encendido de las luces intermitentes derechas.
	Right direction indicator	*Illuminated pushbutton maintained action.* *Right direction indicator switched on/off.*
18	Luces de emergencia	Pulsador mantenido con piloto. Activa/desactiva el encendido de las luces intermitentes derechas e izquierdas.
	Hazard lights	*Illuminated pushbutton maintained action.* *Hazard lights switched on/off.*
19	Intermitente izquierda	Pulsador mantenido con piloto. Activa/desactiva el encendido de las luces intermitentes izquierdas.
	Left direction indicator	*Illuminated pushbutton maintained action.* *Left direction indicator switched on/off.*
20	Solicitud de parada	Piloto. Aviso de solicitud de parada.
	Passenger stop	*Indicator.* *Passenger request stop.*
21	Solicitud de parada PMR	Piloto. Aviso de solicitud de parada PMR.
	Disable Door Request	*Indicator.* *Disabled door request stop.*
22	Aviso HM	Piloto. Aviso de hombre muerto.
	Dead man indicator	*Indicator.* *Dead man indicator.*
23	Indicador Bypass actuado	Piloto. Aviso de que algún bypass ha sido actuado.
	Active bypass indicator	*Indicator.* *Some bypass switch activated.*
24	Piloto fallo freno	Piloto. Aviso de fallo de freno.

	Brake failure indicator	*Indicator.* *Brake failure indicator.*
25	Terminal Bus Tracker	
	Bus Tracker	
26	Pantalla TPDS	Incluye los siguientes controles: - 'Points' controls: 3 botones pulsadores para control de agujas de vía. - Tram Ready to Start: 1 botón pulsador Se asume que integra el indicador de puntualidad
	TPDS Monitor	Including the following controls: - 'Points' controls: 3 push buttons - Tram Ready to Start: 1 push button Assumed integrated Tram Punctuality Display
27	Terminal de Cabina (TCMS)	Terminal de control 'SICAS', CCTV.... Incluidas las siguientes funciones: - Cuentakilómetros - Index-point: Pulsador que permite al conductor añadir un index-point en las imágenes que se están grabando - Reset de fallos: Pulsador para resetear los fallos
	Tram Control monitor	*Tram control monitor (SICAS, CCTV…)* *Comprise the following functions:* - *Odomoter* - *Index-point: to enable the driver to add and index-point to the recorded images* - *Fault reset: To reset all faults*
28	Freno de emergencia	Seta (roja). Aplicación directa del freno de urgencia.
	Emergency brake	*Mushroom head pushbutton(red).* *Emergency brake activation.*
29	Habilitación de puertas derechas	Pulsador no mantenido con piloto. Habilitación de las puertas del lado derecho.
	Right door release	*Illuminated pushbutton momentary action.* *Right door release.*
30	Habilitación de puertas izquierdas	Pulsador no mantenido con piloto. Habilitación de las puertas del lado izquierdo.
	Left door release	*Illuminated pushbutton momentary action.* *Left door release.*
31	Apertura de puertas	Pulsador no mantenido con piloto. Permite abrir las puertas que previamente hayan sido habilitadas.
	Central door open	*Illuminated pushbutton momentary action.* *Central opening of previously released doors.*
32	Cierre de puertas	Pulsador no mantenido con piloto. Permite cerrar las puertas que previamente hayan sido abiertas.
	Central door close	*Illuminated pushbutton momentary action.* *Central closing of all opened doors.*
33	Apertura puerta simple cercana a cabina.	Conmutador de tres posiciones (izquierda, derecha y reposo) no mantenido. Permite abrir la puerta simple adyacente a cabina del lateral adecuado de la cabina habilitada.
	Cab door open/close selector	*Spring-loaded centre-off selector switch – 3 positions (left, right and centre).* *To allow to open and close nearside single door of the enable cab.*

34	Bypass habilitación puertas	Conmutador dos posiciones. Bypass de permiso de habilitación de lateral de puertas. Este conmutador debe estar colocado en otro lugar al del control de puertas, con el resto de bypasses.
	Door release bypass	*Selector switch – 2 positions* *Door side release bypass.*
35	Radio	
	Radio	
36	Modo degradado PWM	Conmutador. Selector 2 posiciones de modo de conducción en caso de fallo de la señal PWM - Normal - Degradado
	PWM degraded mode	*Selector switch – 2 positions.* *Driving mode selection in case of PWM signal failure.* - *Normal* - *Degraded*
37	Modo EMERGENCIA	Conmutador de dos posiciones. Para continuar la marcha ante el fallo del sistema de control del tranvía.
	EMERGENCY mode	*Selector switch – 2 positions.* *To allow the ride in case of tram system control failure*
38	Bypass VELOCIDAD CERO	Conmutador de dos posiciones. Bypass de velocidad cero.
	ZERO VELOCITY Bypass	*Selector switch – 2 positions.* *Bypass of the zero velocity signal.*
39	Bypass HOMBRE MUERTO	Conmutador de dos posiciones. Bypass de hombre muerto.
	DEAD MAN Bypass	*Selector switch – 2 positions.* *Zero velocity signal bypass.*
40	Bypass LAZO TRACCION	Conmutador de dos posiciones. Bypass de Lazo de Tracción.
	TRACTION LOOP Bypass	*Selector switch – 2 positions.* *Traction loop bypass.*
41	Bypass LAZO SEGURIDAD	Pulsador no mantenido con piloto. Bypass que permite rearmar el lazo de seguridad de puertas en el tranvía desde la cabina habilitada.
	SECURITY LOOP Bypass	*Illuminated pushbutton momentary action.* *Doors security loop bypass.*
42	Voltímetro	Pantalla. Voltímetro digital. Mide la tensión en la batería.
	Voltmeter	*Display.* *Digital voltmeter. Show battery voltage.*
43	Prueba de Lámparas	Pulsador no mantenido. A utilizar por el personal de mantenimiento. Enciende todos los pilotos del pupitre.
	Indicator lamp test	*Illuminated pushbutton momentary action.* *Focus on maintenance screw. Switch on all desk indicators.*
44	Zumbador	Zumbador. Aviso sonoro Hombre Muerto (HM). Aviso sonoro de que todas las puertas están cerradas y se dispone de tracción.
	Buzzer	*Buzzer.* *Dead man audible warning.* *All doors are closed and traction is available audible signal.*

45	Panel de mando HVAC	Panel de mando del aire acondicionado. Tendrá los siguientes controles: - Conmutador 3 posiciones (off, ventilación baja, ventilación alta) - Selector de la temperatura de la cabina propia - Conmutador ON/OFF cabina contraria - Conmutador 4 posiciones (off, ventilación, automático y calefacción) - Piloto de avería - Piloto de conexión
	HVAC command panel	*HVAC command panel with the following controls:* *- 3 position selector switch (off, low ventilation and high ventilation)* *- Temperature regulator for cab in use* *- Selector switch – ON/OFF for the other cab.* *- 4 position selector switch (off, ventilation, automatic and heating)* *- Connection and failure telltale.*
46	Desconexión Manual	Pulsador no mantenido. Inicia la secuencia de apagado del tren.
	Manual disconnection	*Pushbutton momentary action.* *To start with the train shutdown*
47	Conjunto manipulador	El conjunto manipulador incorpora las siguientes funciones: - Llave habilitación cabina: Para habilitar la cabina y tomar el mando, hay que introducir la llave y accionar el switch. - Inversor de marcha: Selector de 3 posiciones (AD: marcha hacia delante; 0: Neutro; AT: Marcha hacia atrás) - Pulsador marcha atrás: Pulsador precintado para habilitar la marcha atrás. - Palanca manipulador: • Tracción y freno • Freno emergencia • Maniobra a velocidad reducida • Pulsador de hombre muerto
	Combined Controller	*The controller has the following functions:* *- Key lock switch: To cab enable.* *- Direction controller: Forward direction* *Reverse direction* *- Reverse direction pushbutton.* *- Controller handle:* • *Traction and brake* • *Emergency brake* • *Low speed mode* • *Dead man safety device*
48	Bocina	Pedal
	Horn	*Pedal*
49	Timbre	Pulsador no mantenido
	Bell	*Pushbutton momentary activation*
50	Monitores CCTV	2 monitores TFT de 10,4''
	CCTV monitors	*Two 10,4'' TFT screens*
51	Cargador de radio portátil	Enchufe de 230 V
	Portable radio charging point	*230 V charging point*
52	Cargador de máquina de billetes	Enchufe de 230 V

	Hand-held ticket machine charging point	*230 V charging point*
53	Modo visualización espejos retrovisores	Pulsador no mantenido. Para forzar el cambio de modo de visualización de 'Tram stop' a 'Nomal mode' mientras el tranvías está parado. Cambia la imagen mientras el pulsador está sostenido.
	Rear view mode	*Pushbutton momentary action.* *Changeover facility from 'Tram stop' to 'normal mode' for as long as it is held down.*
54	Selector OnStreet-OffStreet	Conmutador 2 posiciones. Permite seleccionar el tipo de iluminación del tranvía.
	OnStreet-OffStreet mode selection	*Selector switch – 2 positions.* *To allow the selection of the tramway illumination mode.*
55	Emergencia pantógrafo	Seta amarilla. Bajar el pantógrafo en caso de emergencia.
	Pantograph emergency drop	*Mushroom head pushbutton(yellow).* *Pantograph emergency drop.*
56	Señal "Panic Alarm"	Piloto de aviso de que el inspector se encuentra en problemas. Dispone de dos modos de señalización según la categoría de la situación de peligro.
	Panic Alarm	*Visual alarm to indicate that the inspector is experiencing difficulties. There are two signalisation modes depending on the emergency situation grade.*
57	Pulsador Calientapiés	Pulsador mantenido con piloto. Activa/Desactiva la resistencia calientapiés.
	Foot-warmer control	*Illuminated pushbutton maintained action.* *Foot-warmer connection/-disconnection.*
58	Fallo automáticos cabina	Piloto luminoso. Indica si algún magnetotérmicos que protegen la alimentación de los circuitos de habilitación cabina y conexión batería, está abierto.
	Cab enable circuit breaker opened	*Indicator.* *Enable cab or connection battery circuit breaker is opened.*

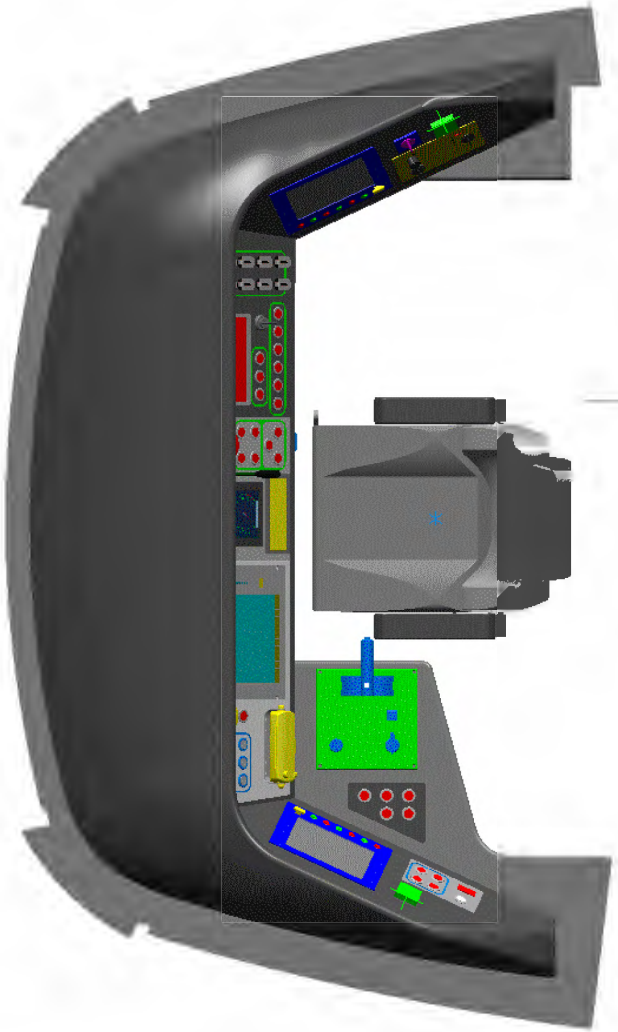

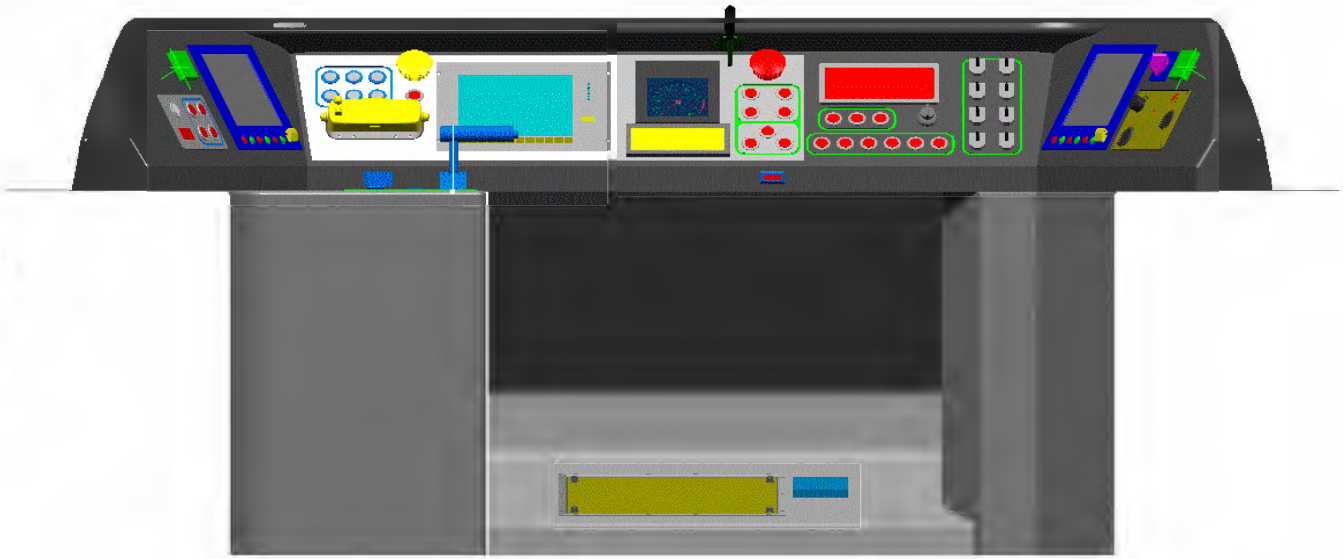

DRIVER´S DESK EQUIPMENT DISPOSITION

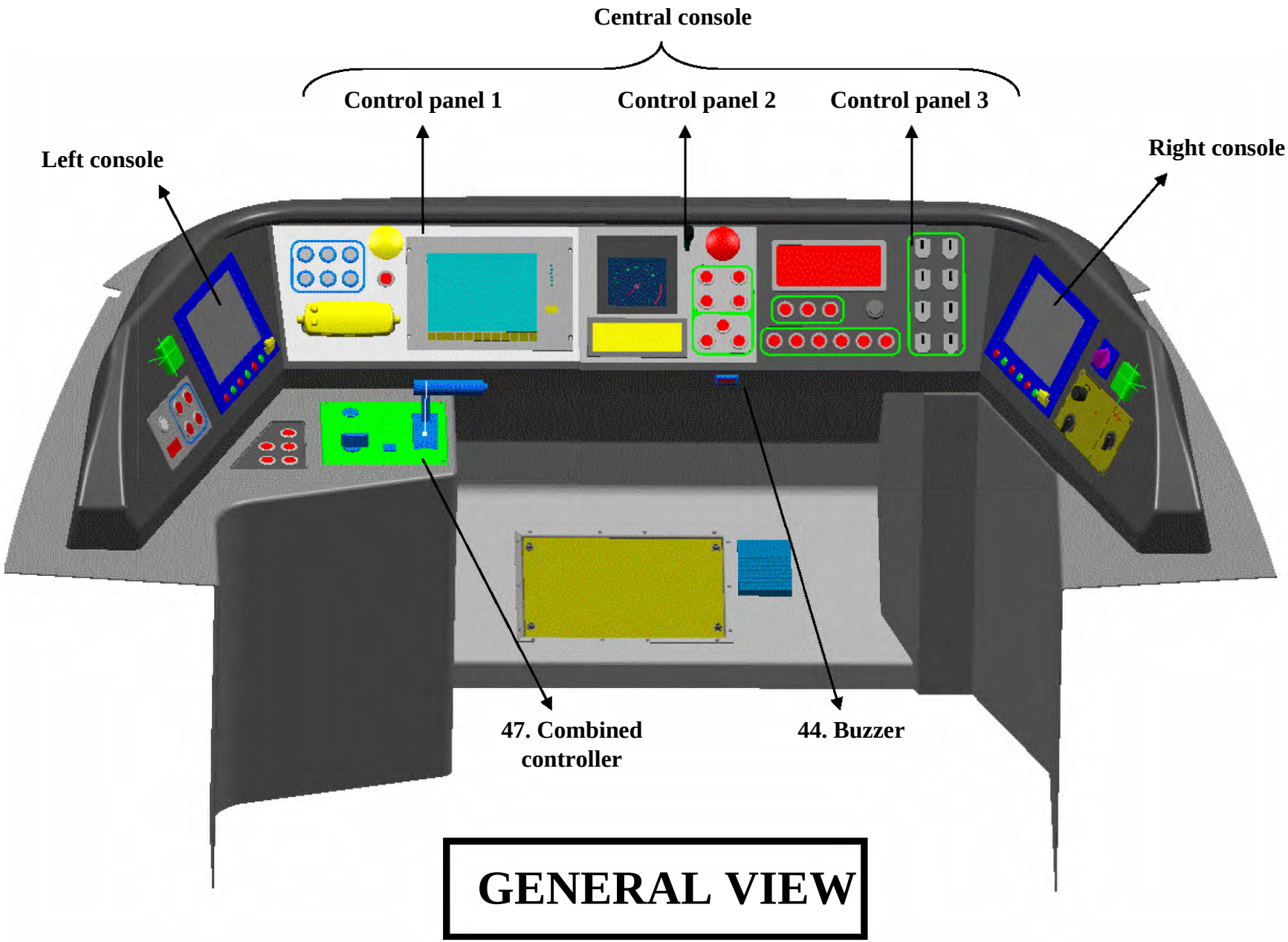

GENERAL VIEW

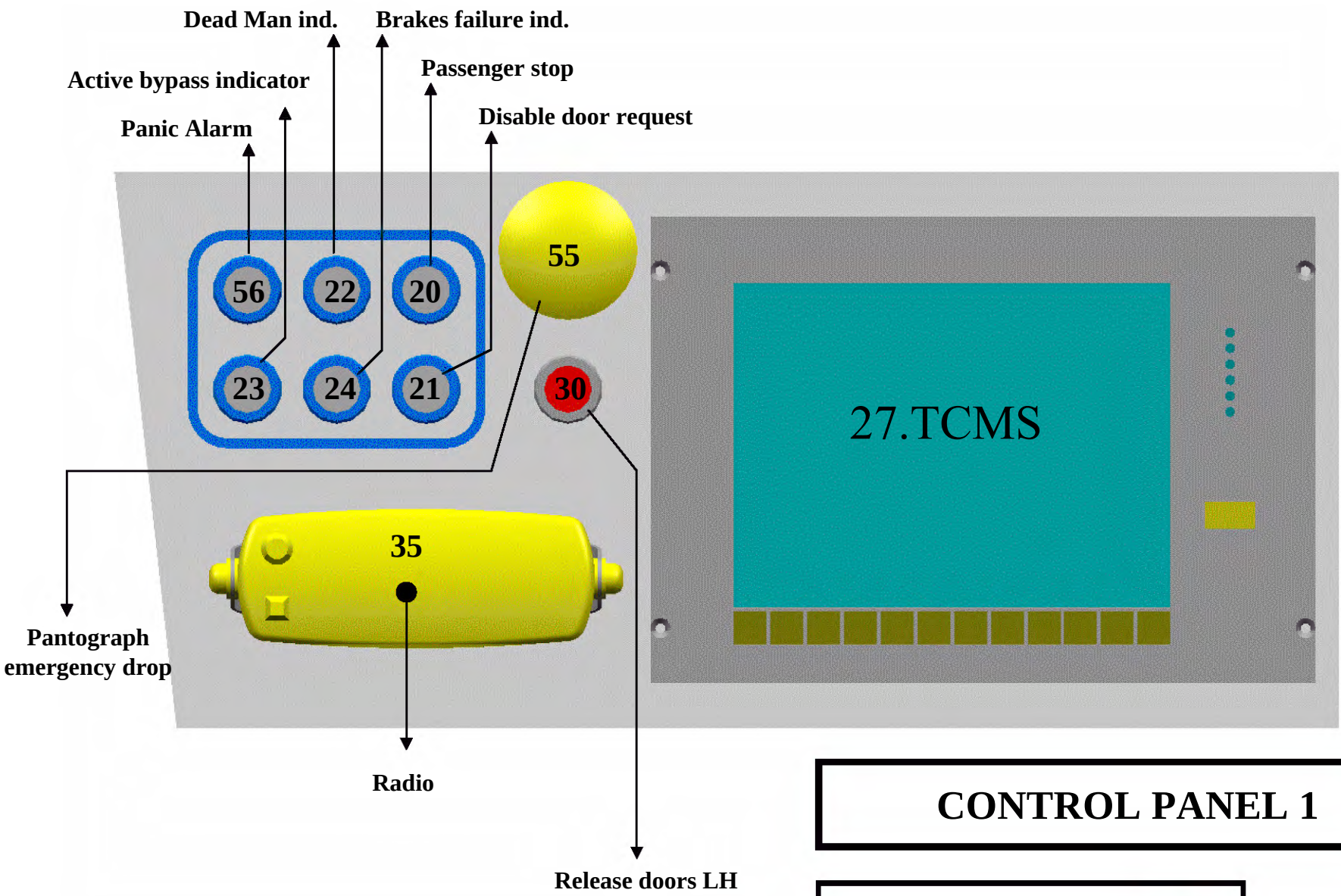

CONTROL PANEL 1

CONTROL DESCRIPTION:

PUSH BUTTON

INDICATOR

USB00000086_0256

CONTROL PANEL 2

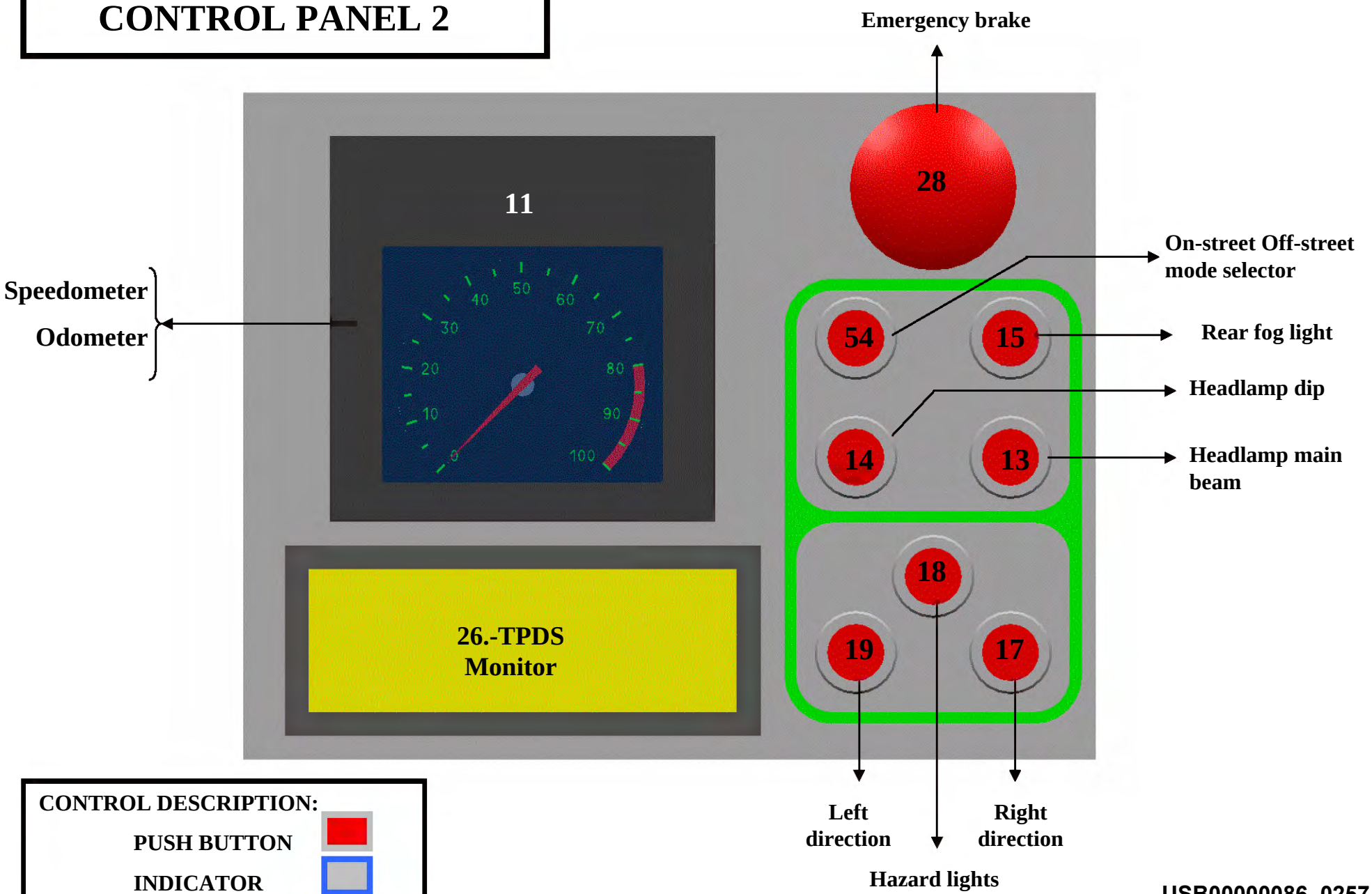

CONTROL DESCRIPTION:

PUSH BUTTON

INDICATOR

USB00000086_0257

CONTROL PANEL 3

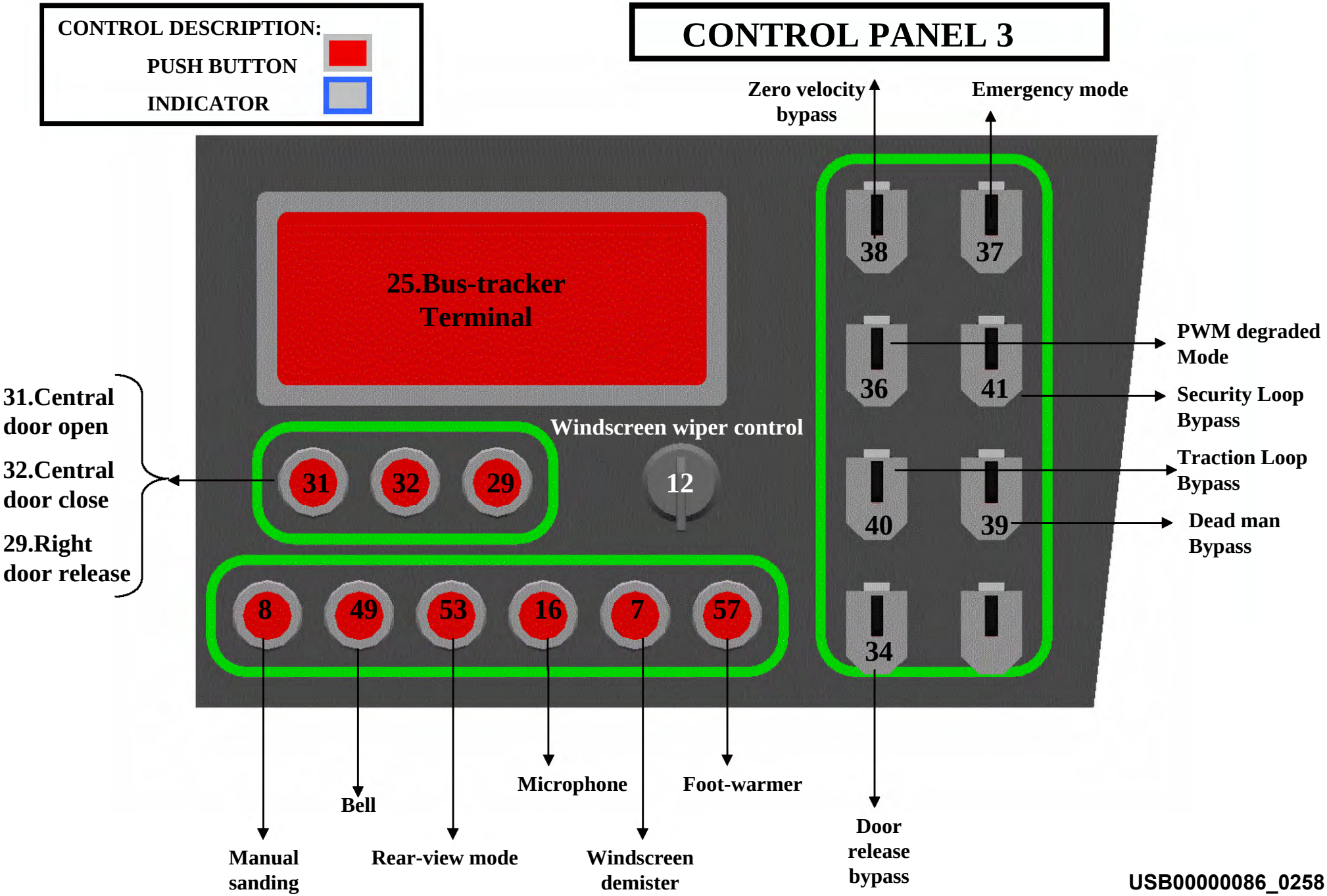

USB00000086_0258

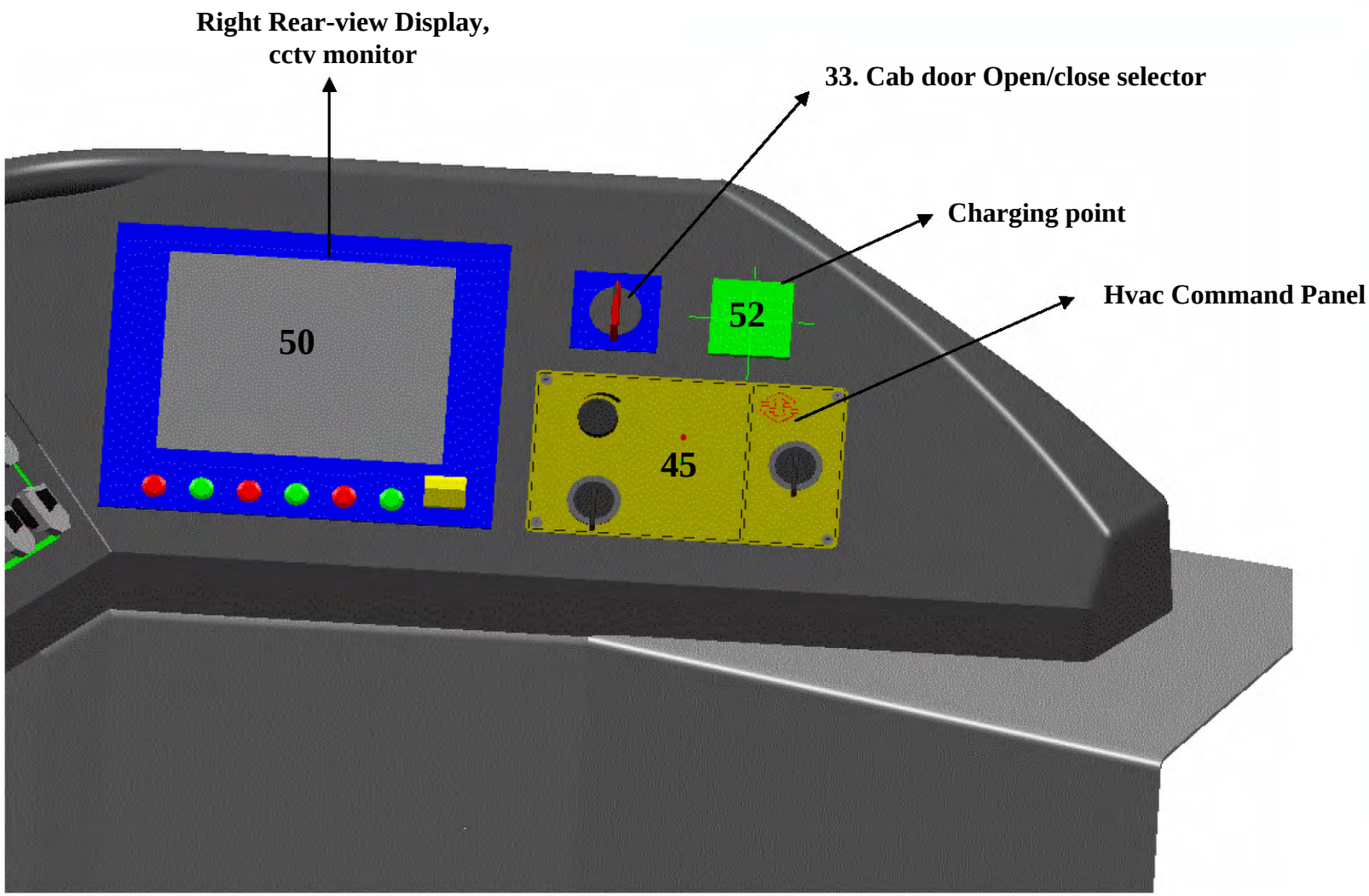

RIGHT CONSOLE

USB00000086_0259

LEFT CONSOLE

CONTROL DESCRIPTION:

PUSH BUTTON

INDICATOR

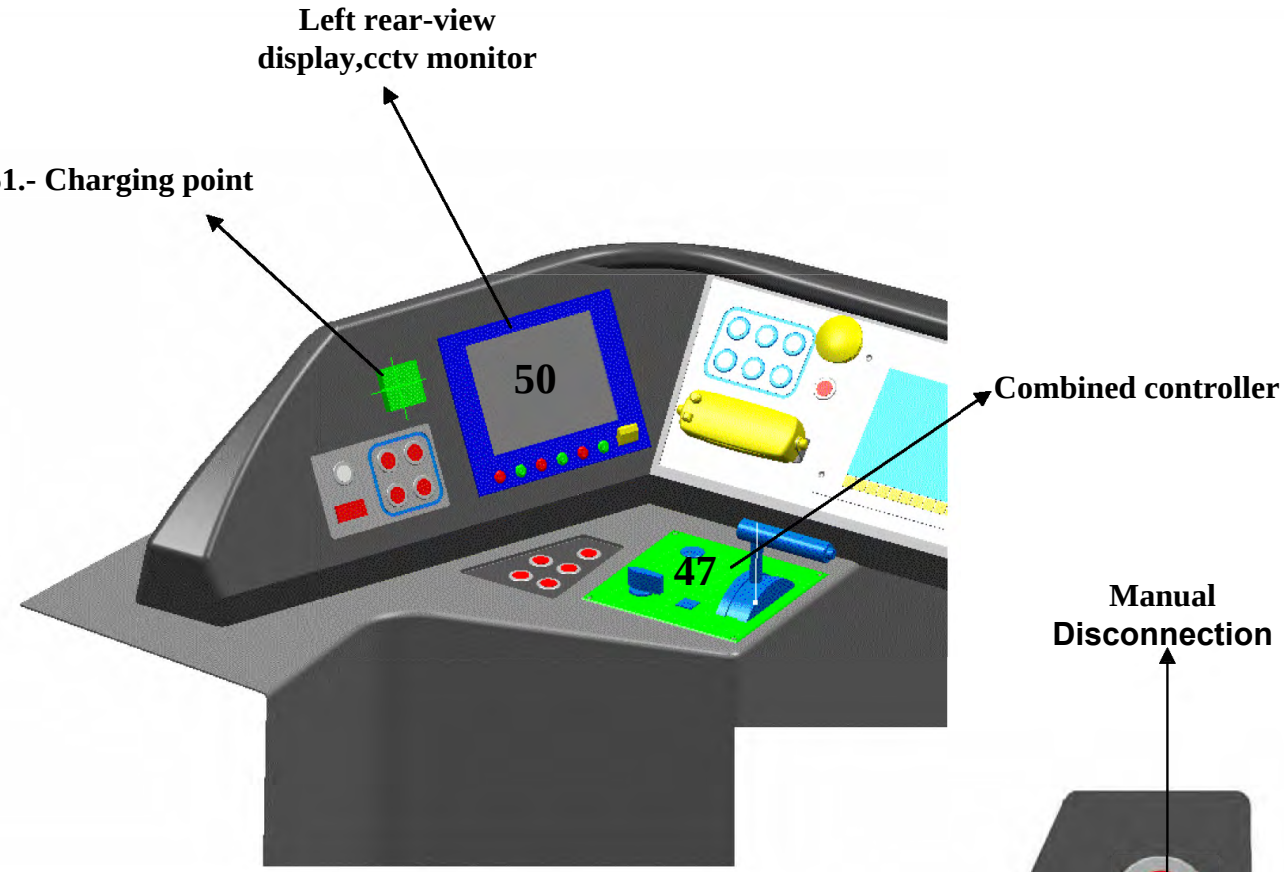

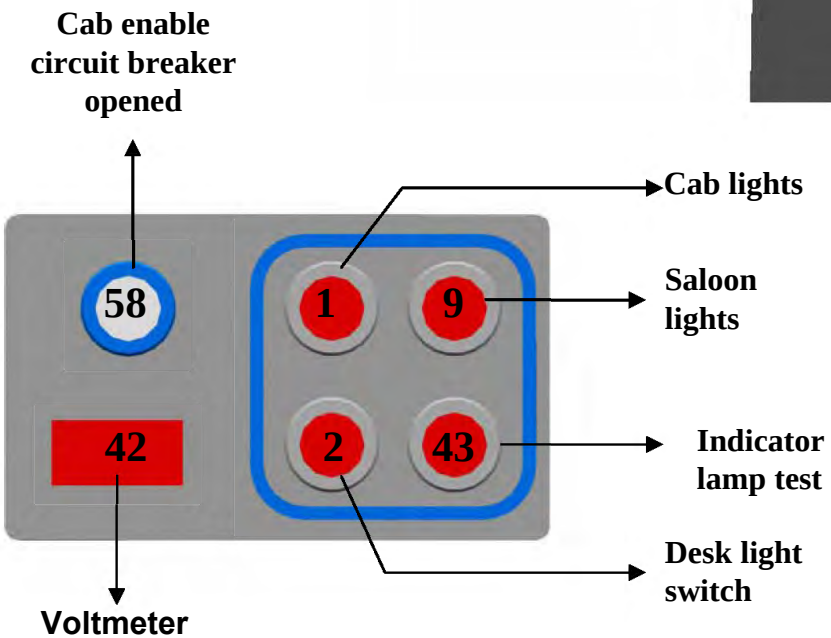

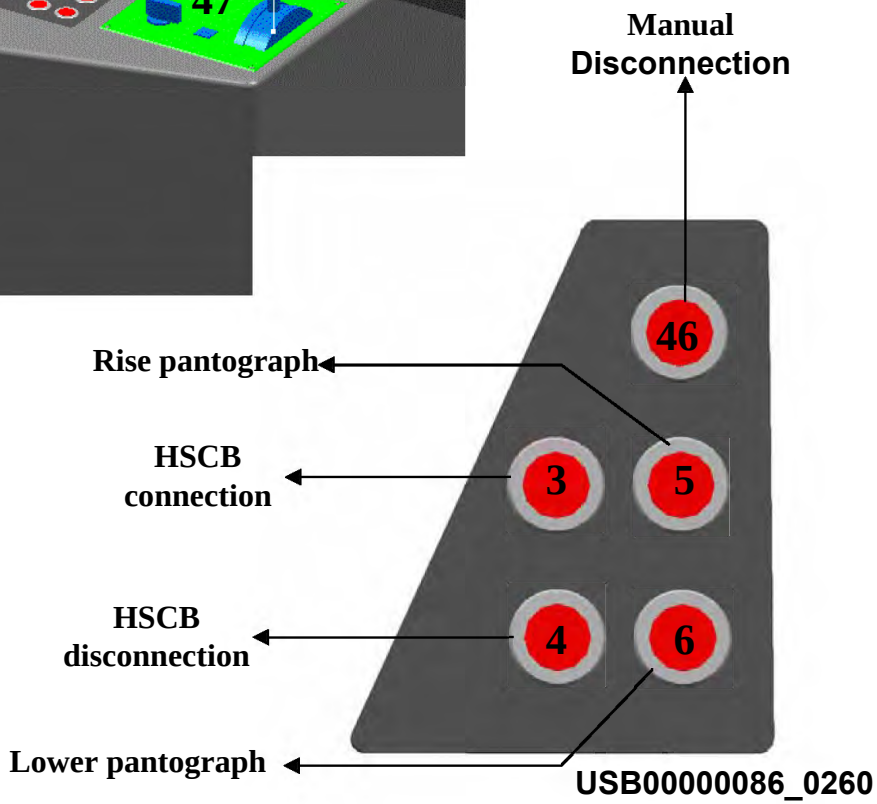

Foot warmer
48
Horn

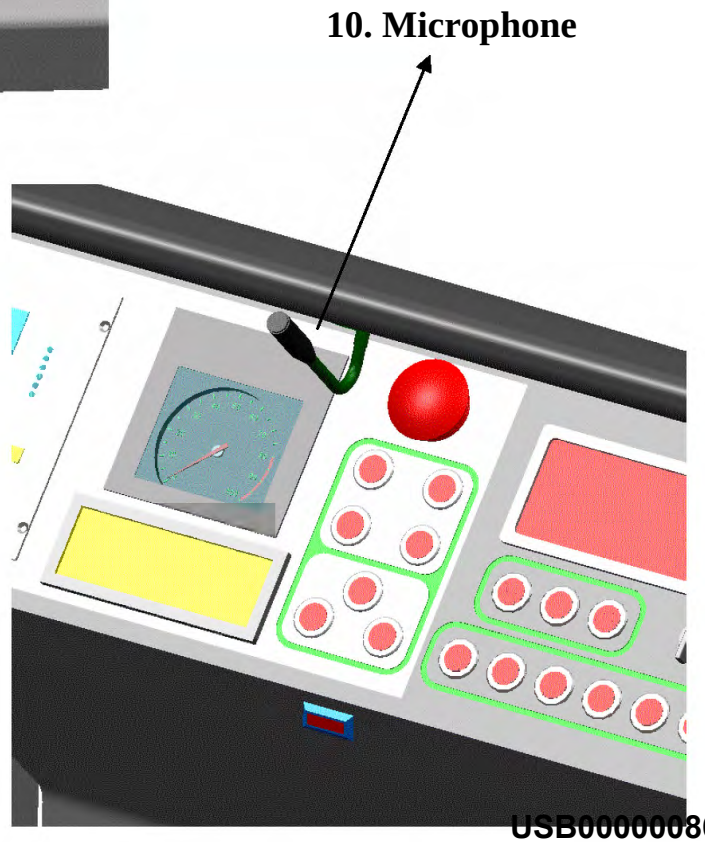
10. Microphone

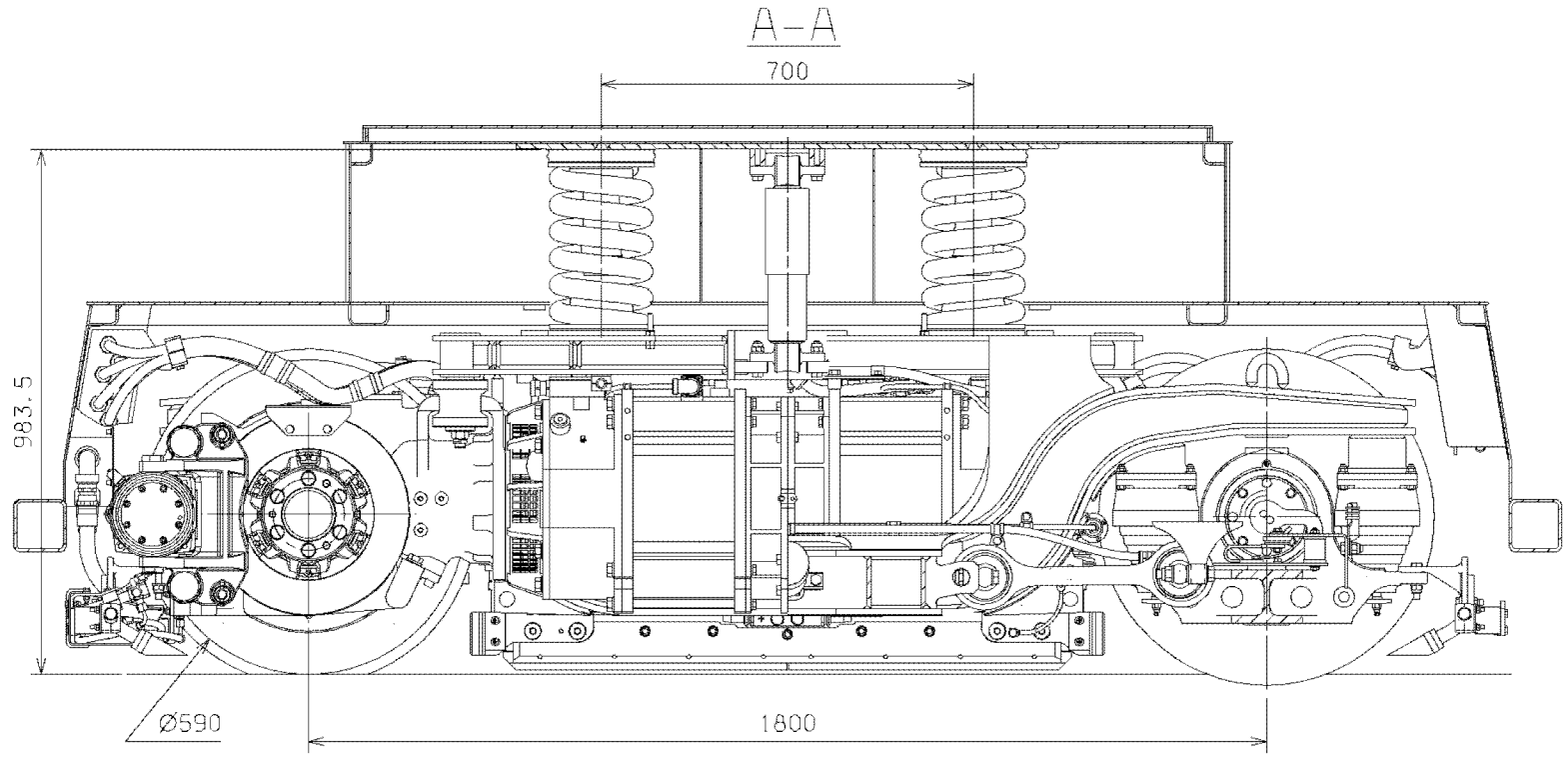

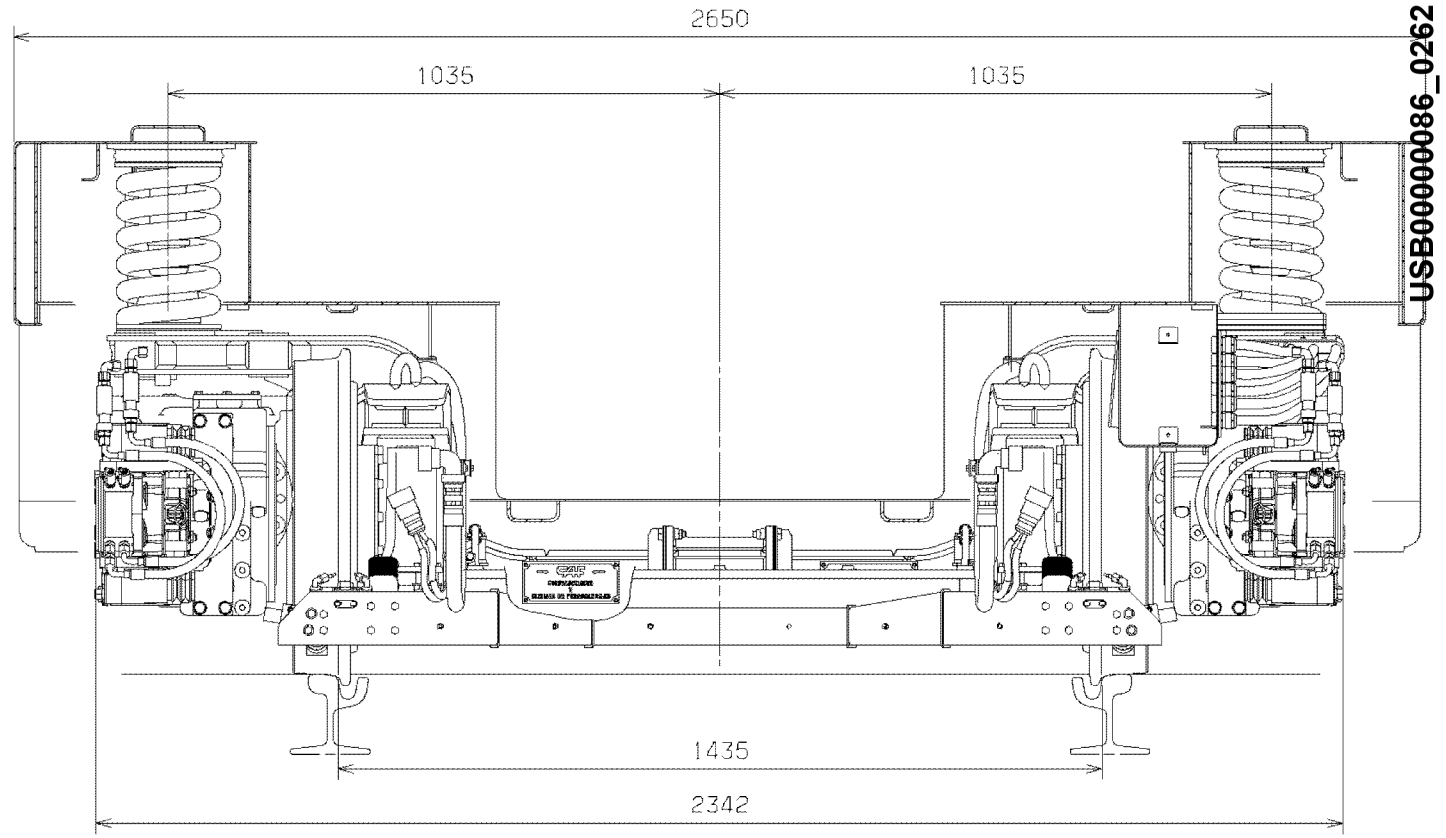

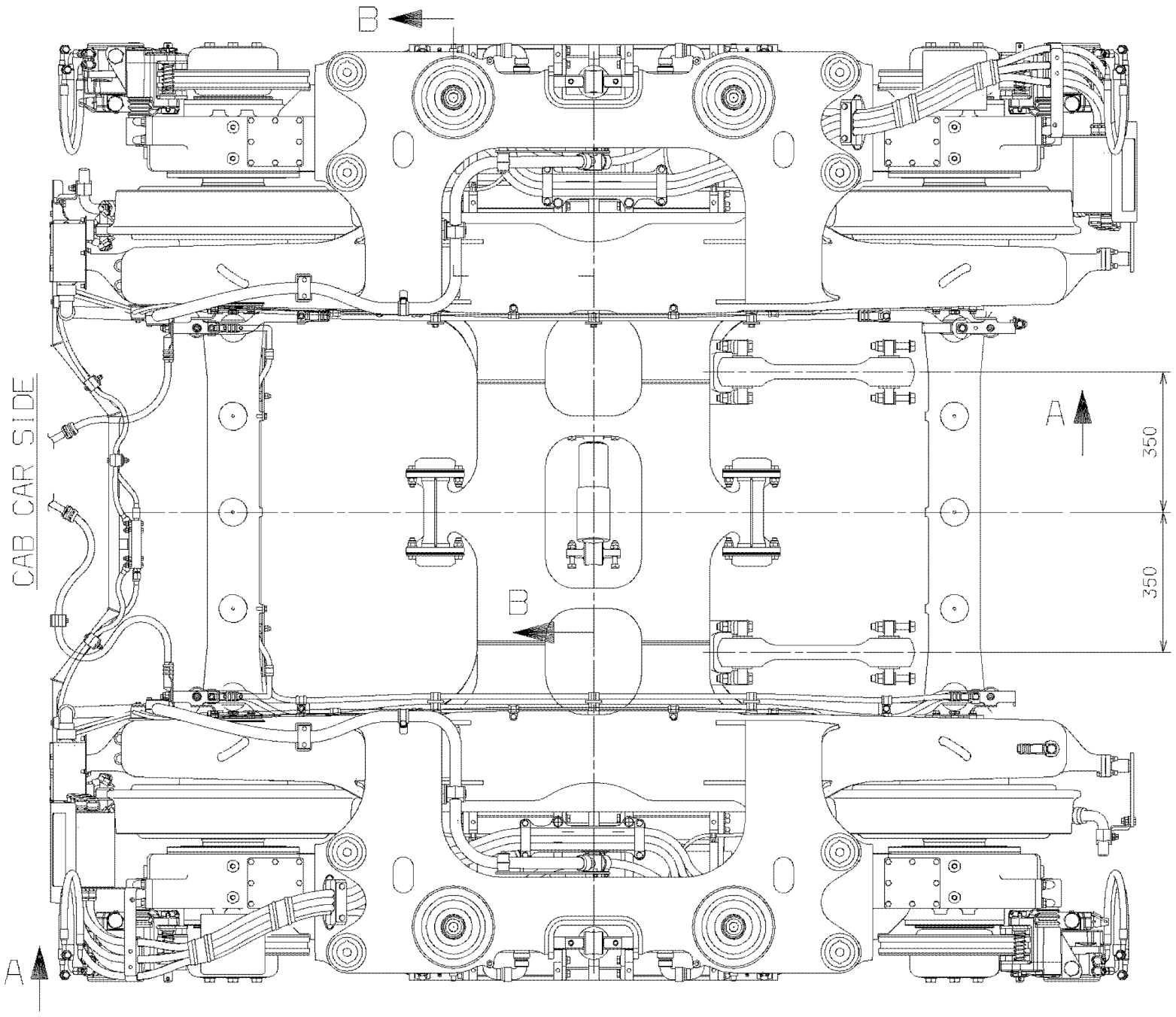

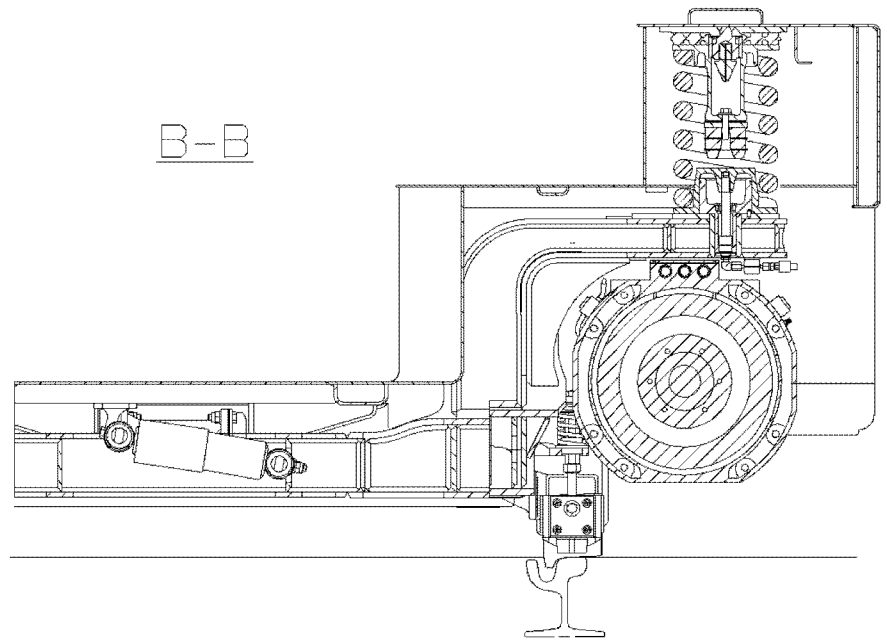

USB00000086_0262

MODIFICACIONES				
	FECHA	NOMBRES		
	COMPR.		PLANO Nº	
	VERIFIC.			
	HOMOL.			
			SUSTITUYE A:	EDICION
	TOL. GEN.	ESCALA	DESIGNACION:	HOJA Nº
APLICACIONES	NF F 00-037	1/10	MOTOR BOGIE ARRANGEMENT	1 / Nº DE HOJAS 1
	FECHA	NOMBRES	ENTIDAD: CAF-BEASAIN	
	DIBUJ. 26-09-06		REFERENCIA: L.00.480.00	
TRAMWAY EDINBOURGH	VERIFIC. 26-09-06			
	SUSTITUYE A :			EDICION

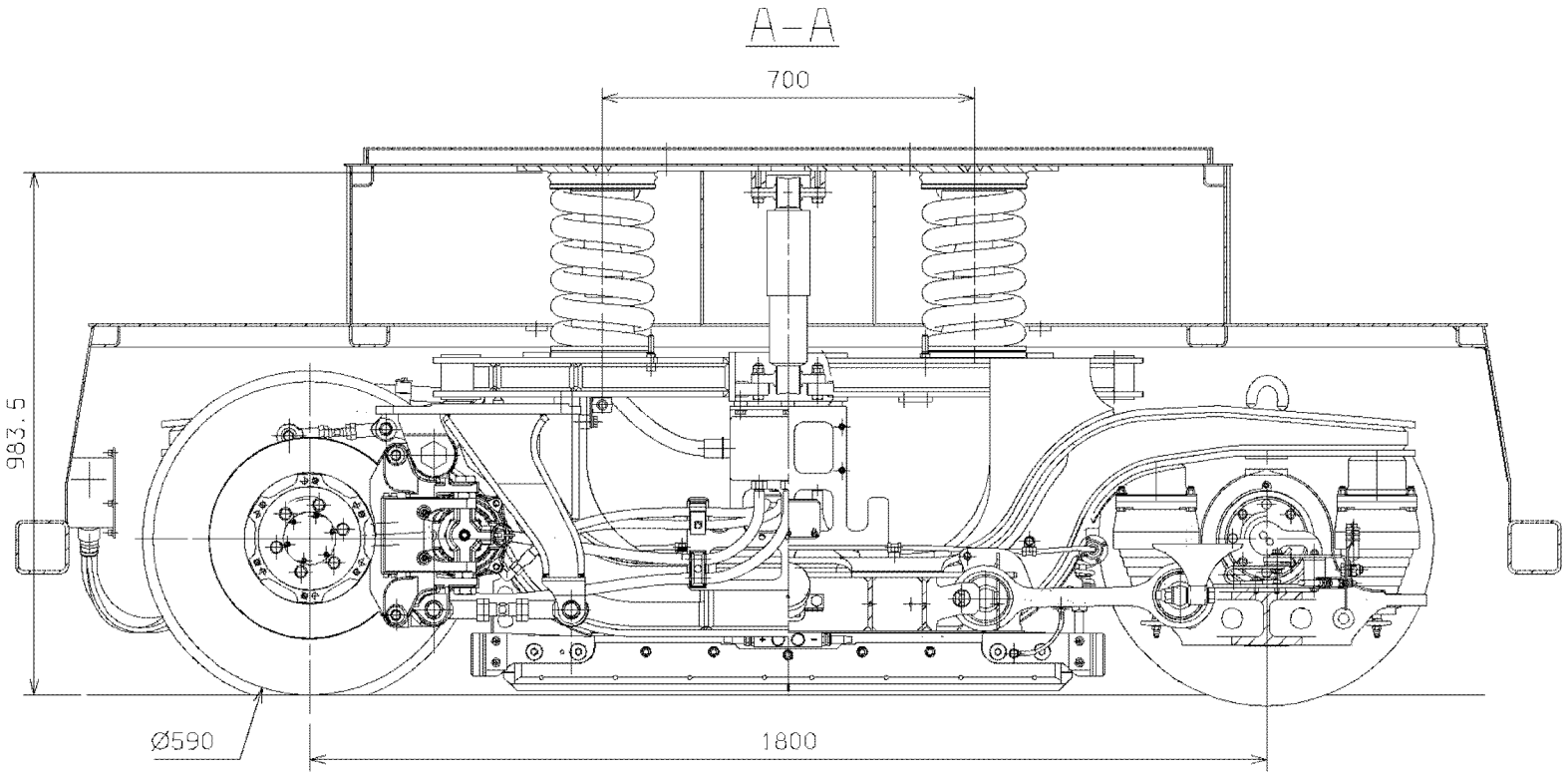

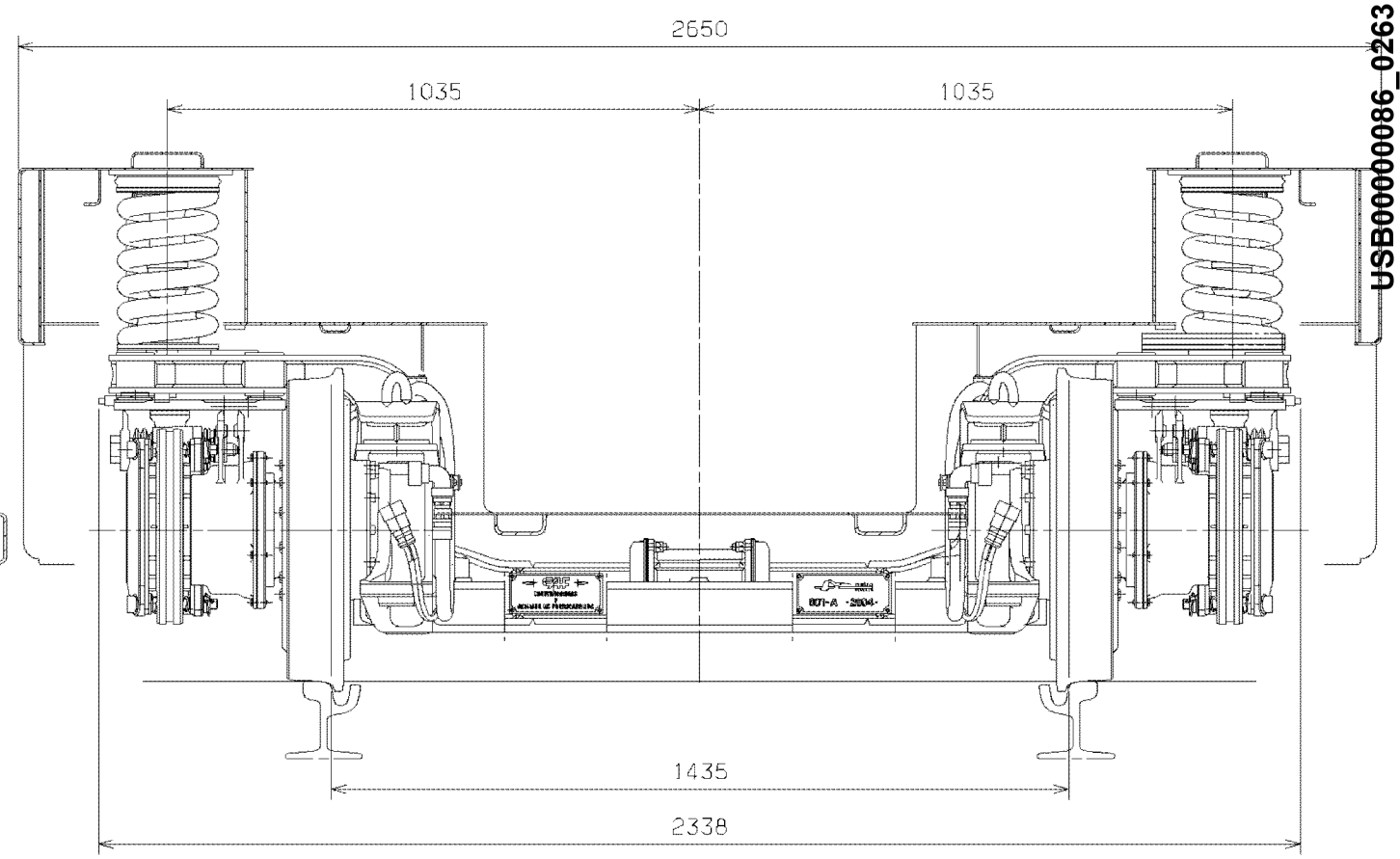

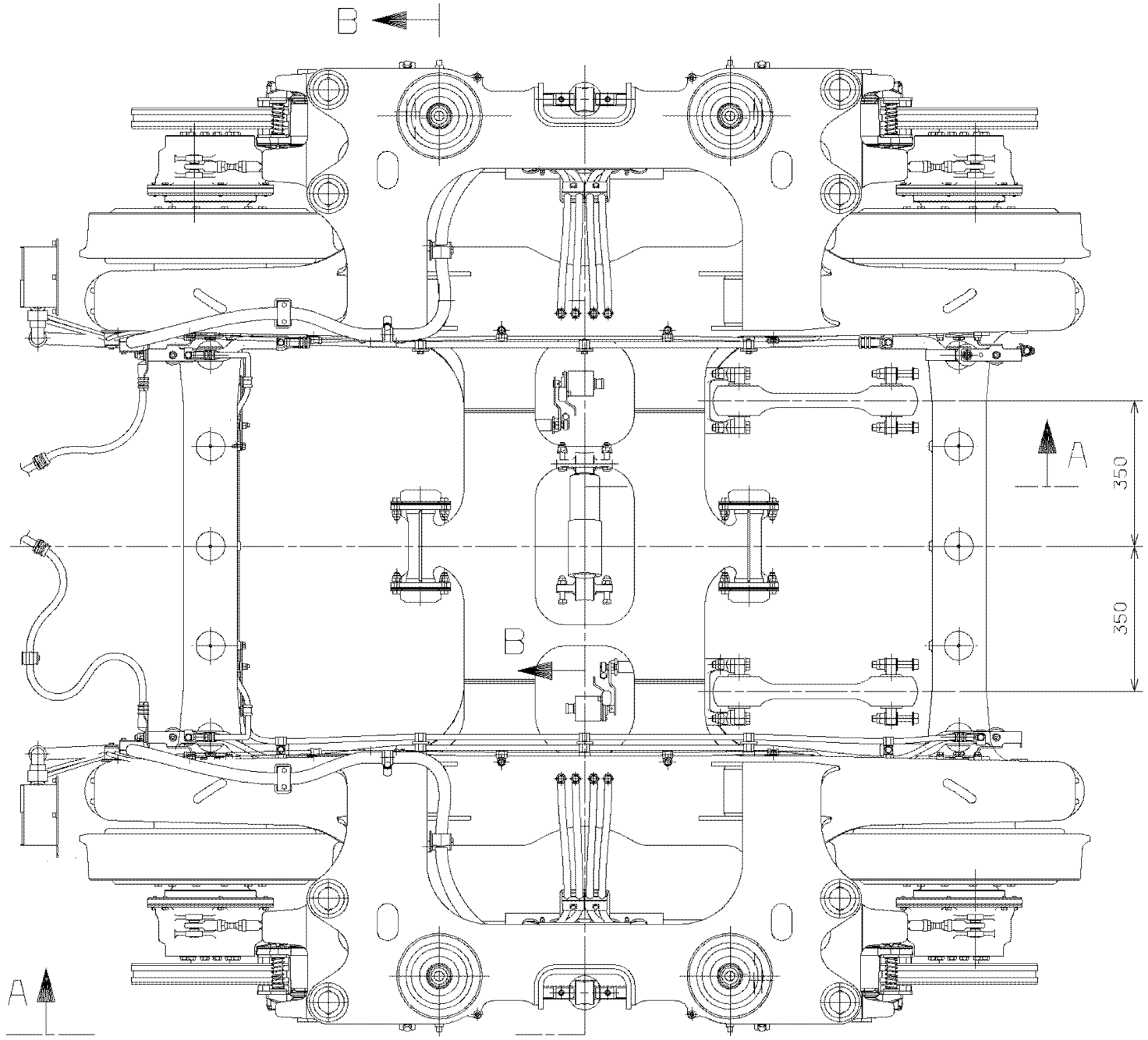

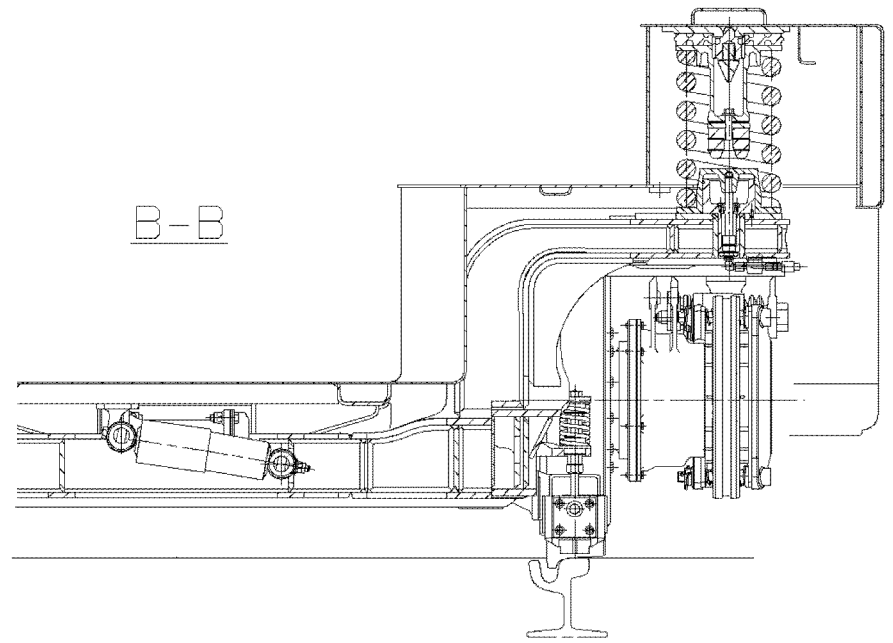

MODIFICACIONES				
		FECHA	NOMBRES	
	COMPR.			PLANO Nº
	VERIFIC.			
	HOMOL.			
			SUSTITUYE A:	EDICION
	TOL. GEN.	ESCALA	DESIGNACION:	HOJA Nº 1
APLICACIONES	NF F 00-037	1/10	TRAILER BOGIE ARRANGEMENT	Nº DE HOJAS 1
		FECHA	NOMBRES	ENTIDAD: CAF-BEASAIN
	DIBUJ.	26-09-06		REFERENCIA: L.00.480.10
TRAMWAY EDINBOURGH	VERIFIC.	26-09-06		
	SUSTITUYE A :			EDICION

USB00000086_0263

TOTAL AREA=42.14m²

PACKS AREA=1.27X6=7.62m²

	40m	50m	60m	80m
Standing	168	218	258	337
Seating	80	90	94	110
TOTAL	248	308	352	447

USB00000086_0264

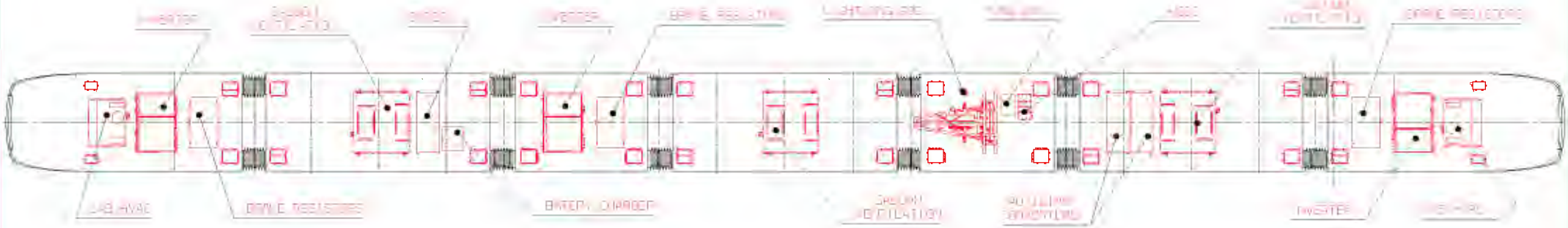

USB00000086_0265

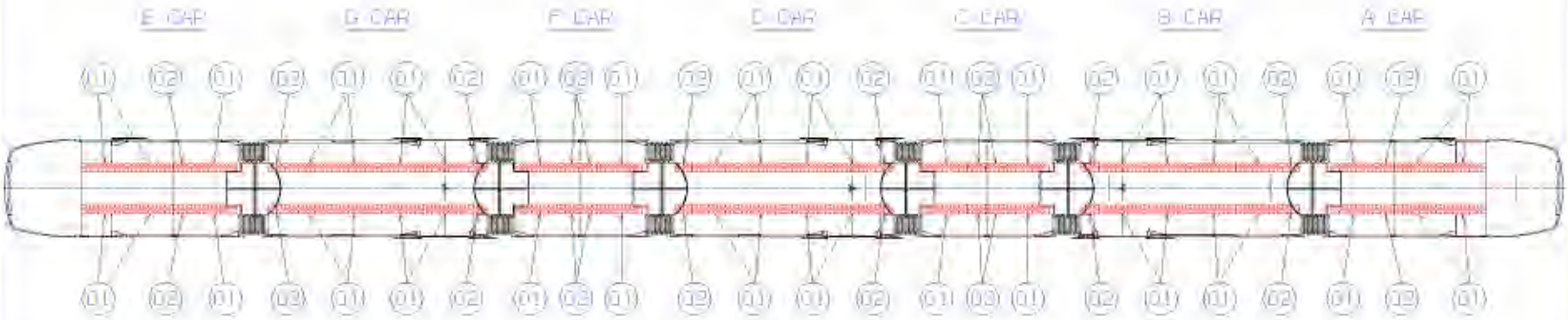

(01) 36W Lighting; total length 1240mm.

(03) 15W Lighting; total length 610mm.

SALOON LIGHTING

CAR-BEASATH

1/20

USB00000086_0266

USB00000086_0267

LADO B

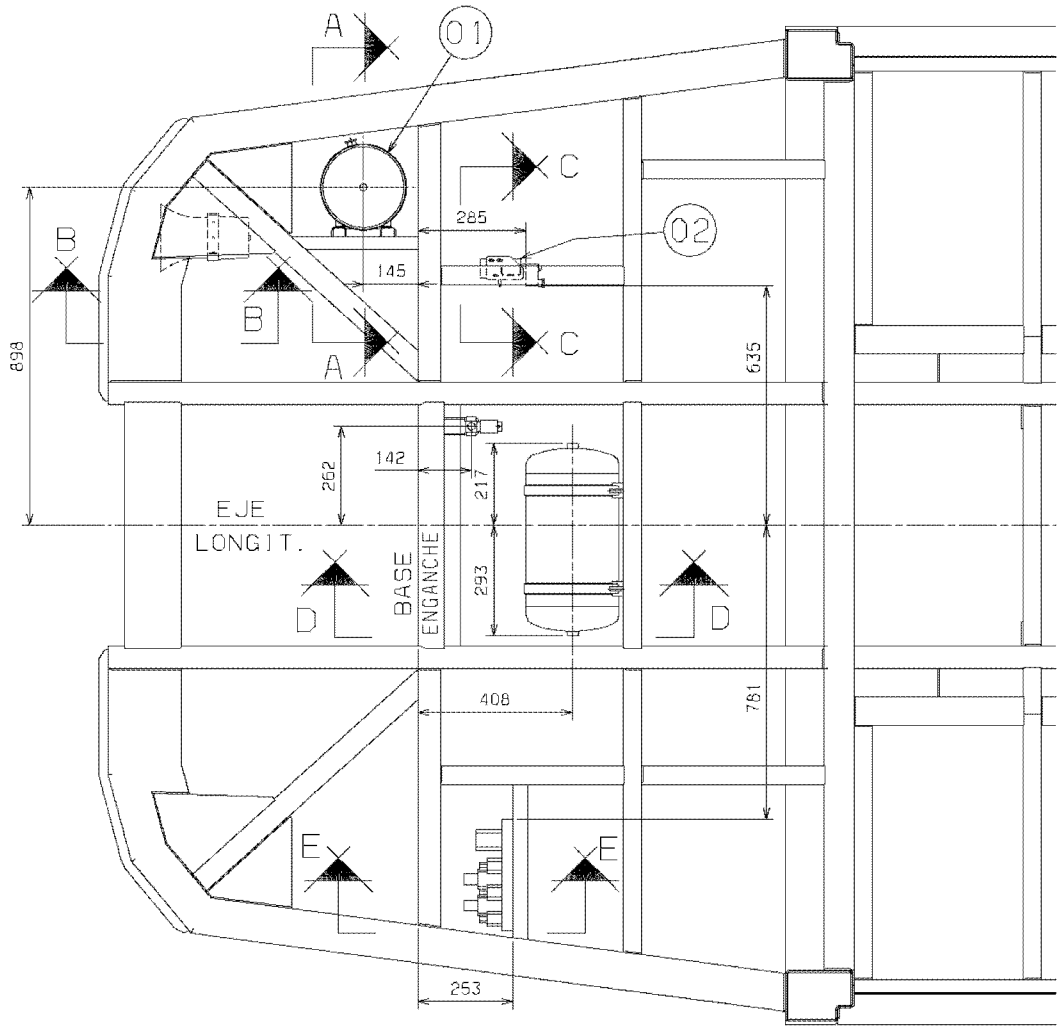

B-B (1/2.5)

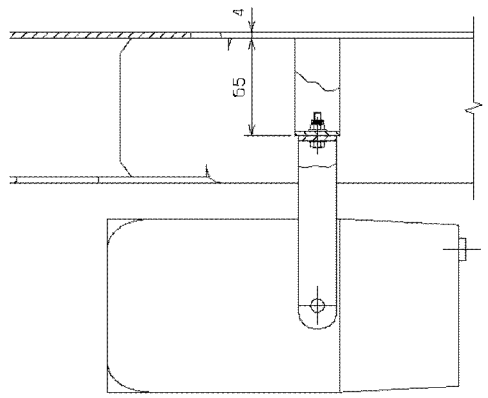

E-E (1/2.5)

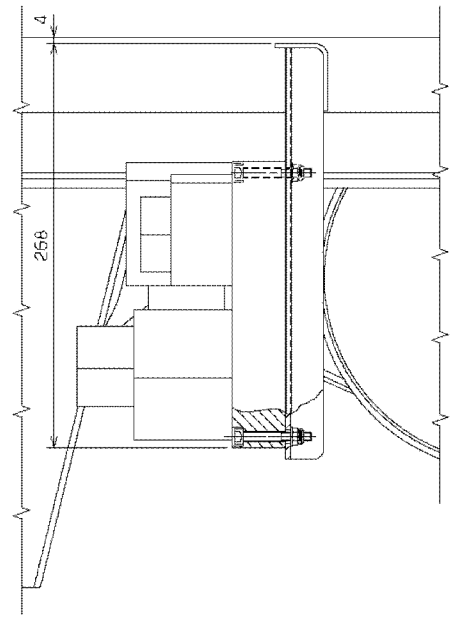

C-C (1/1)
ROTADO 90°

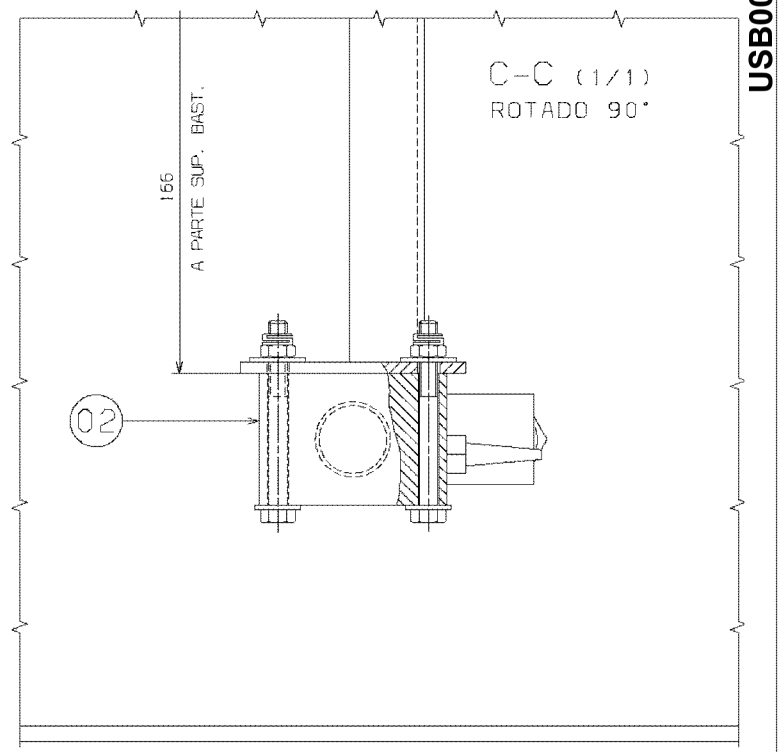

D-D (1/2.5)

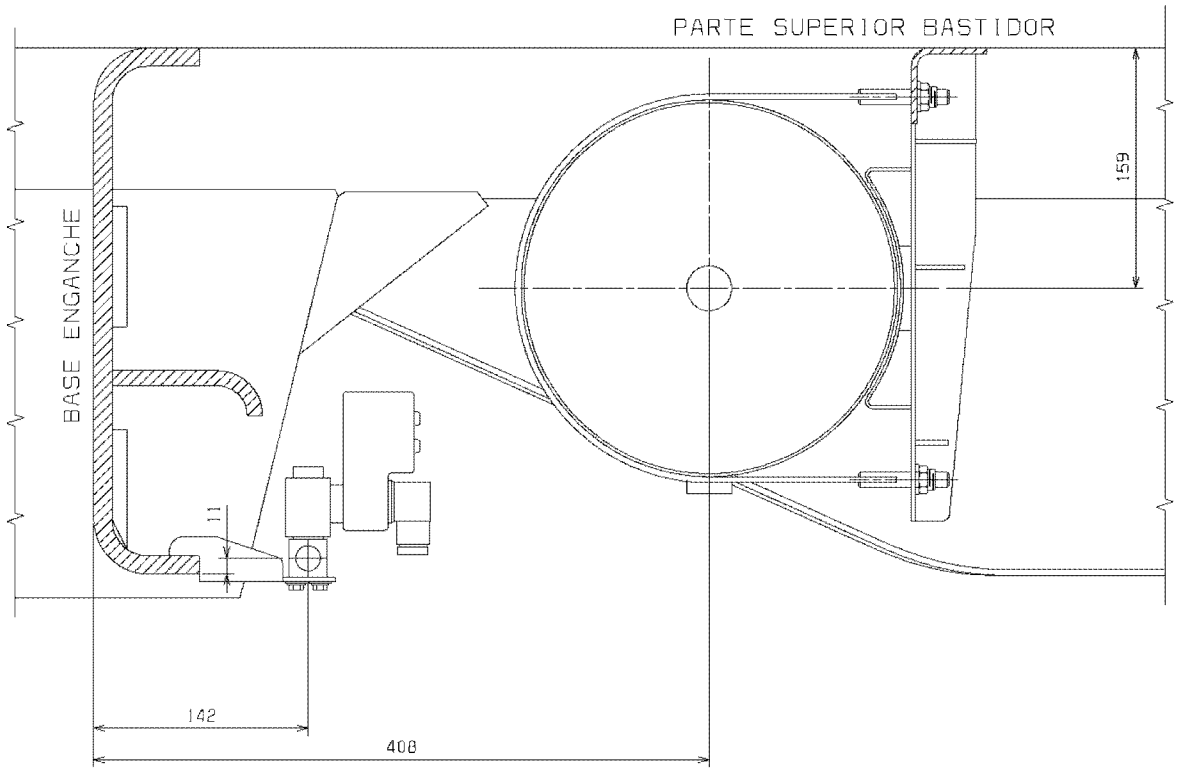

A-A (1/2.5)

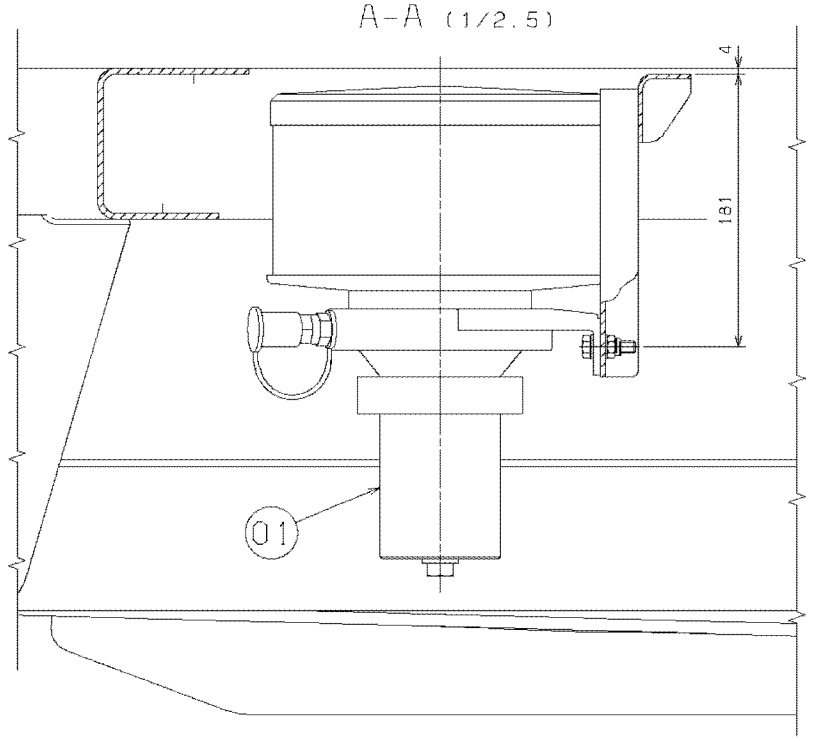

A-E

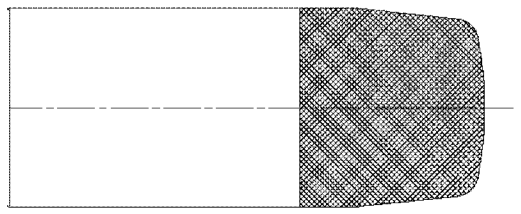

02	FLUNGE LUBRICATION ELECTROVALVE
01	OIL PUMP AND TANK

MODIFICACIONES

APLICACIONES

	FECHA	NOMBRES	
COMPR.			PLANO Nº
VERIFIC.			
HOMOL.			
			SUSTITUYE A:
TOL. GEN.	ESCALA		DESIGNACION:
NF F 00-037	1/10		FLUNGE LUBRICATION MOUNTING
	FECHA	NOMBRES	ENTIDAD: CAF-BEASAIN
DIBUJ.	29-09-06		REFERENCIA: Q.00.072.28
VERIFIC.	29-09-06		
SUSTITUYE A :			

EDICION

HOJA Nº 1

Nº DE HOJAS 1

EDICION

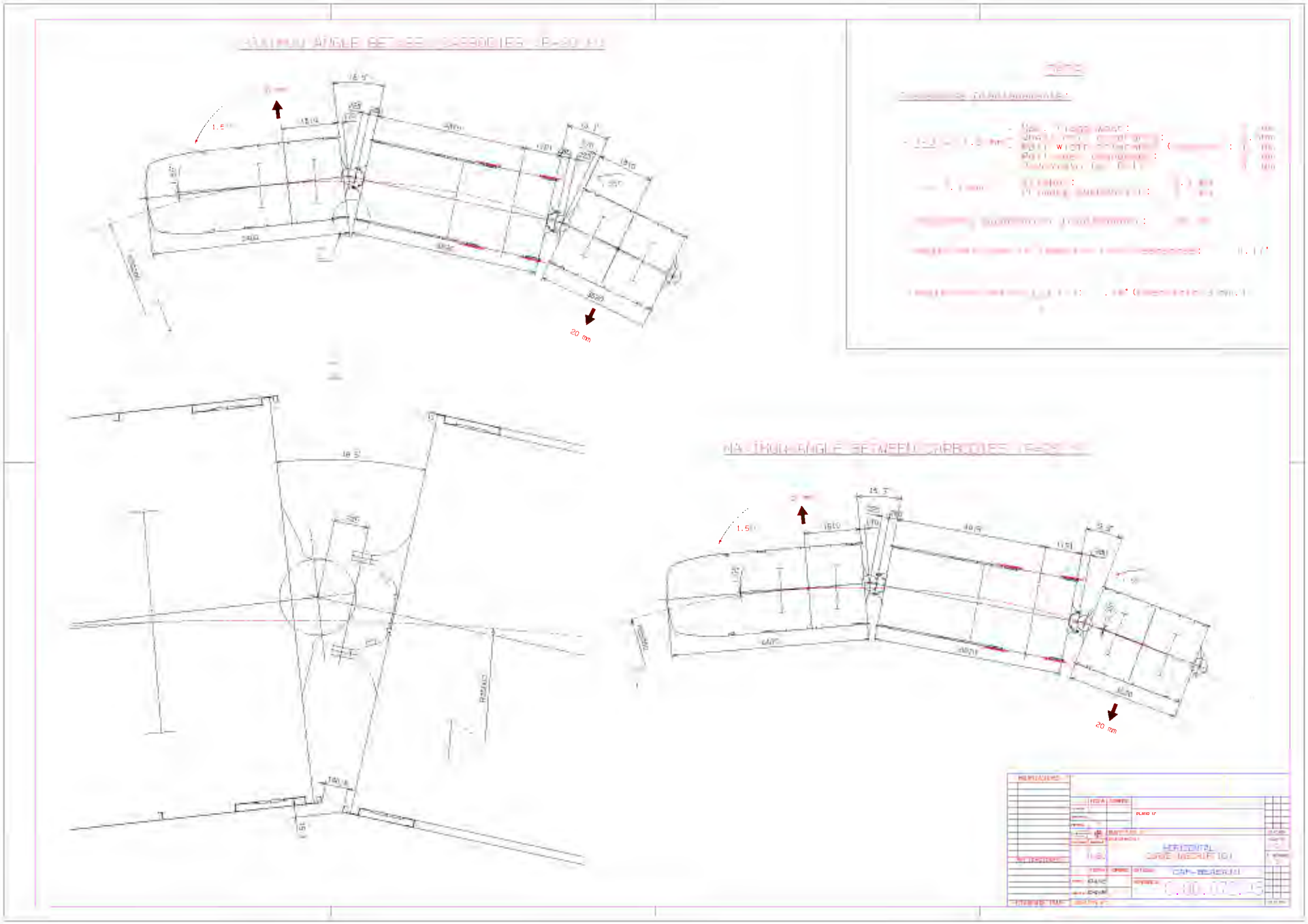

USB00000086_0268

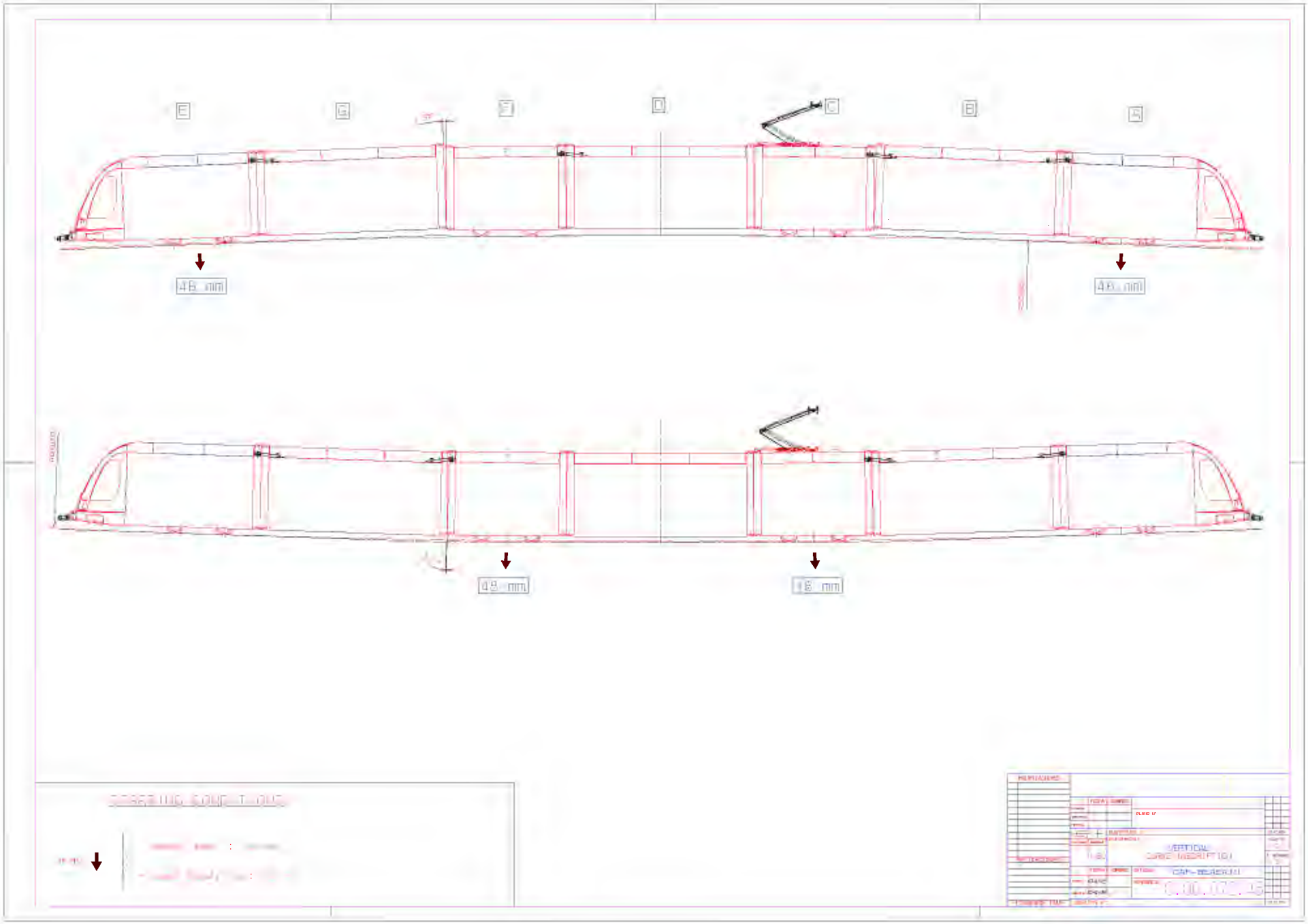

USB00000086_0269

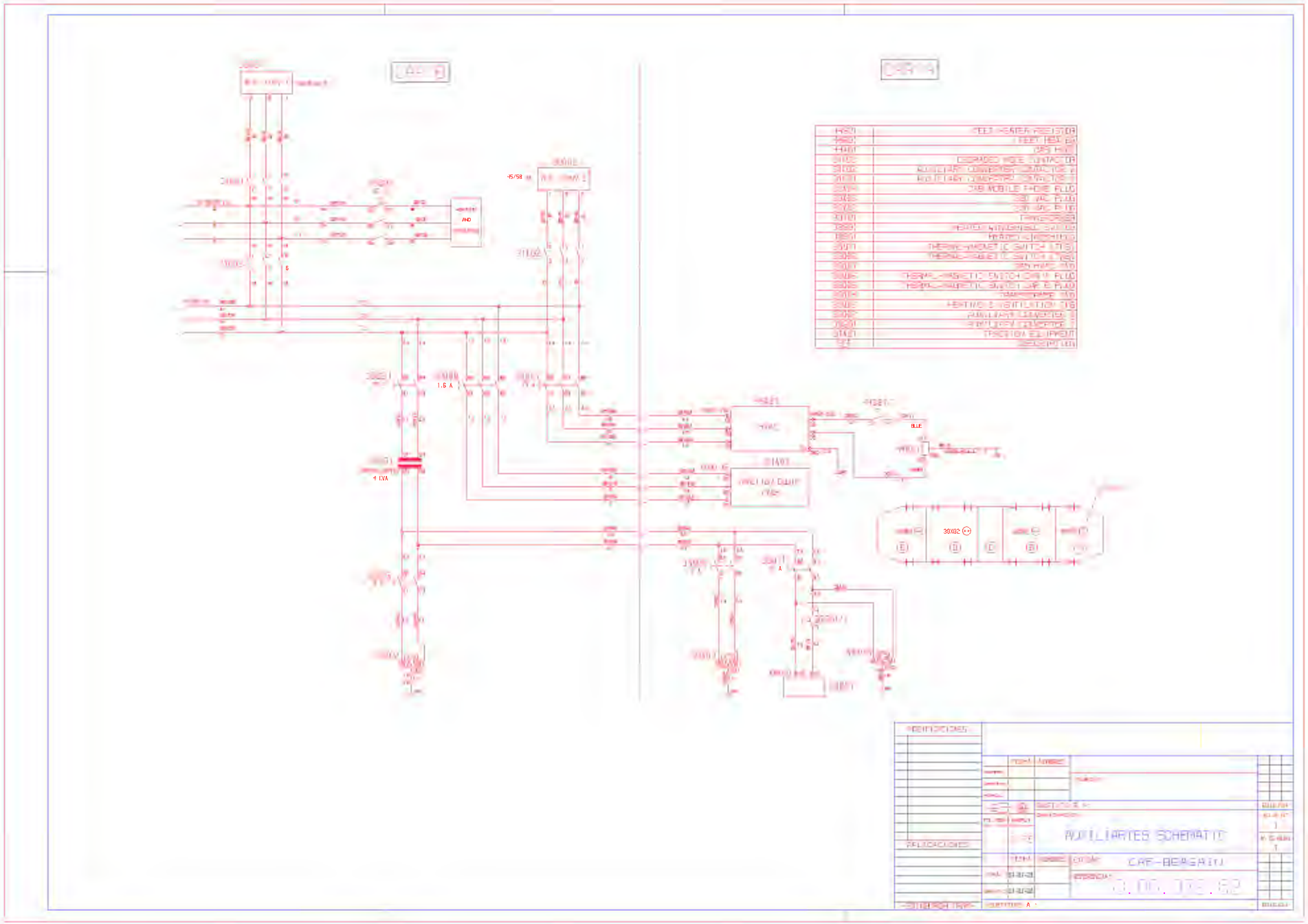

USB00000086_0270

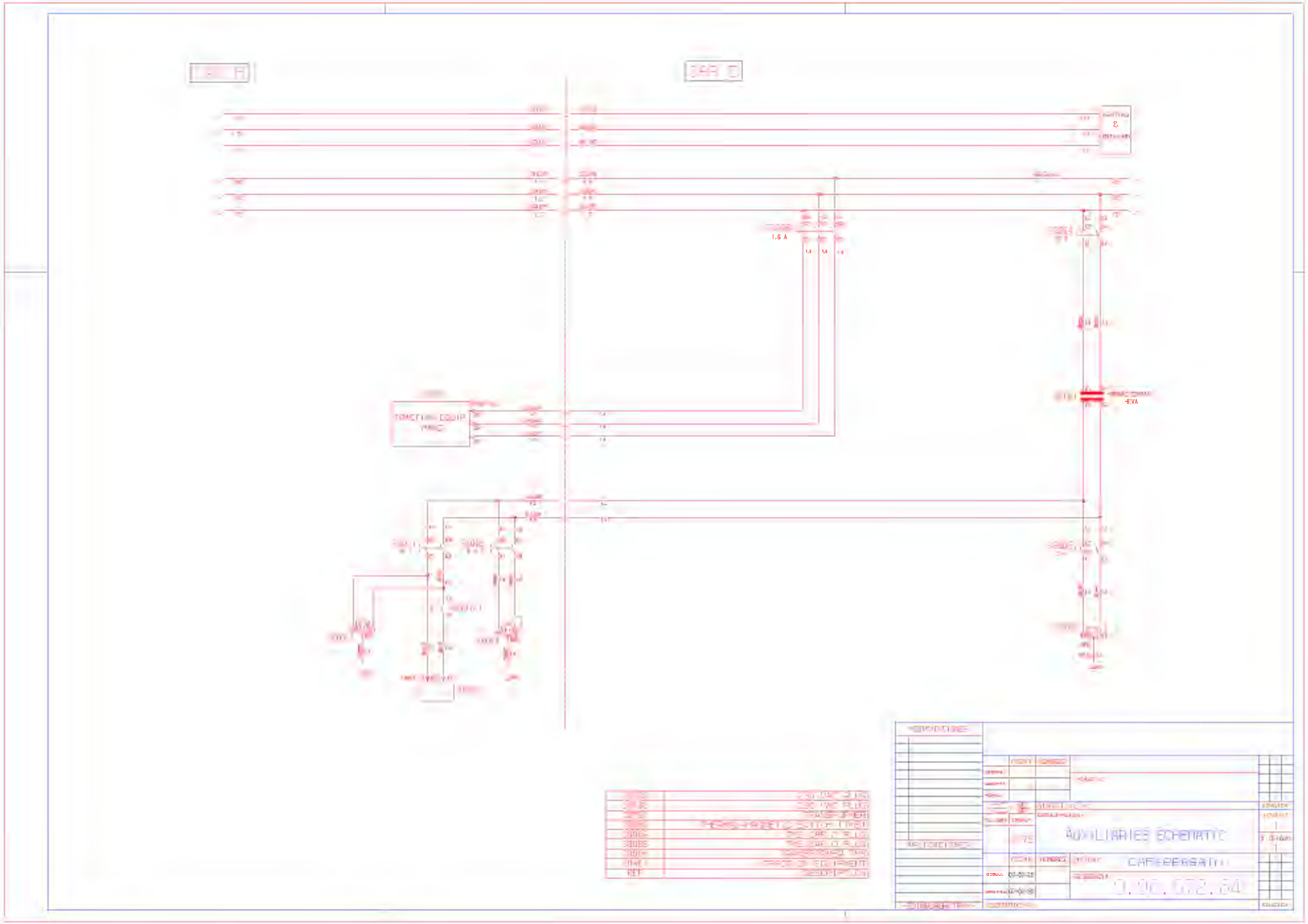

USB00000086_0272

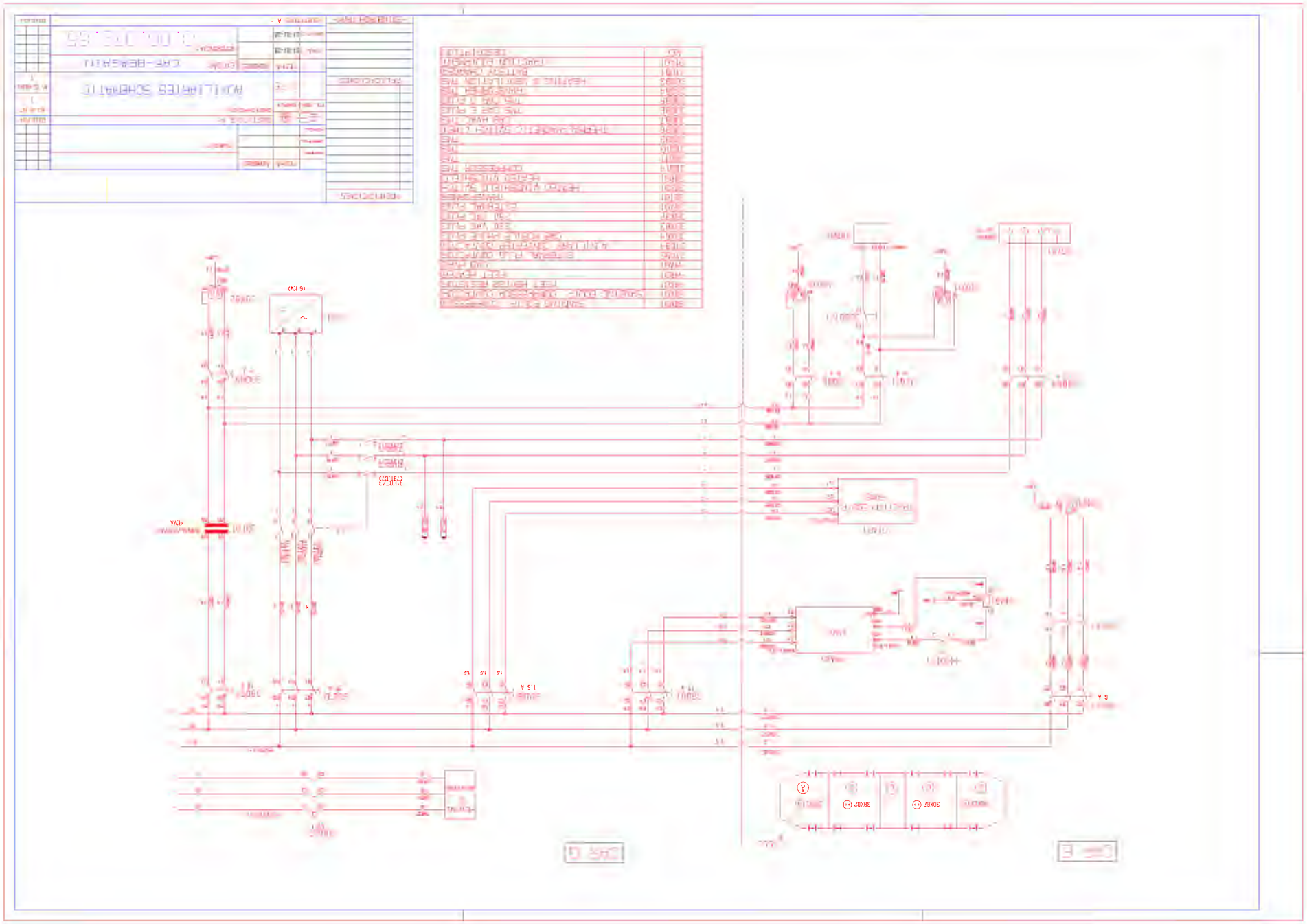

USB00000086_0273

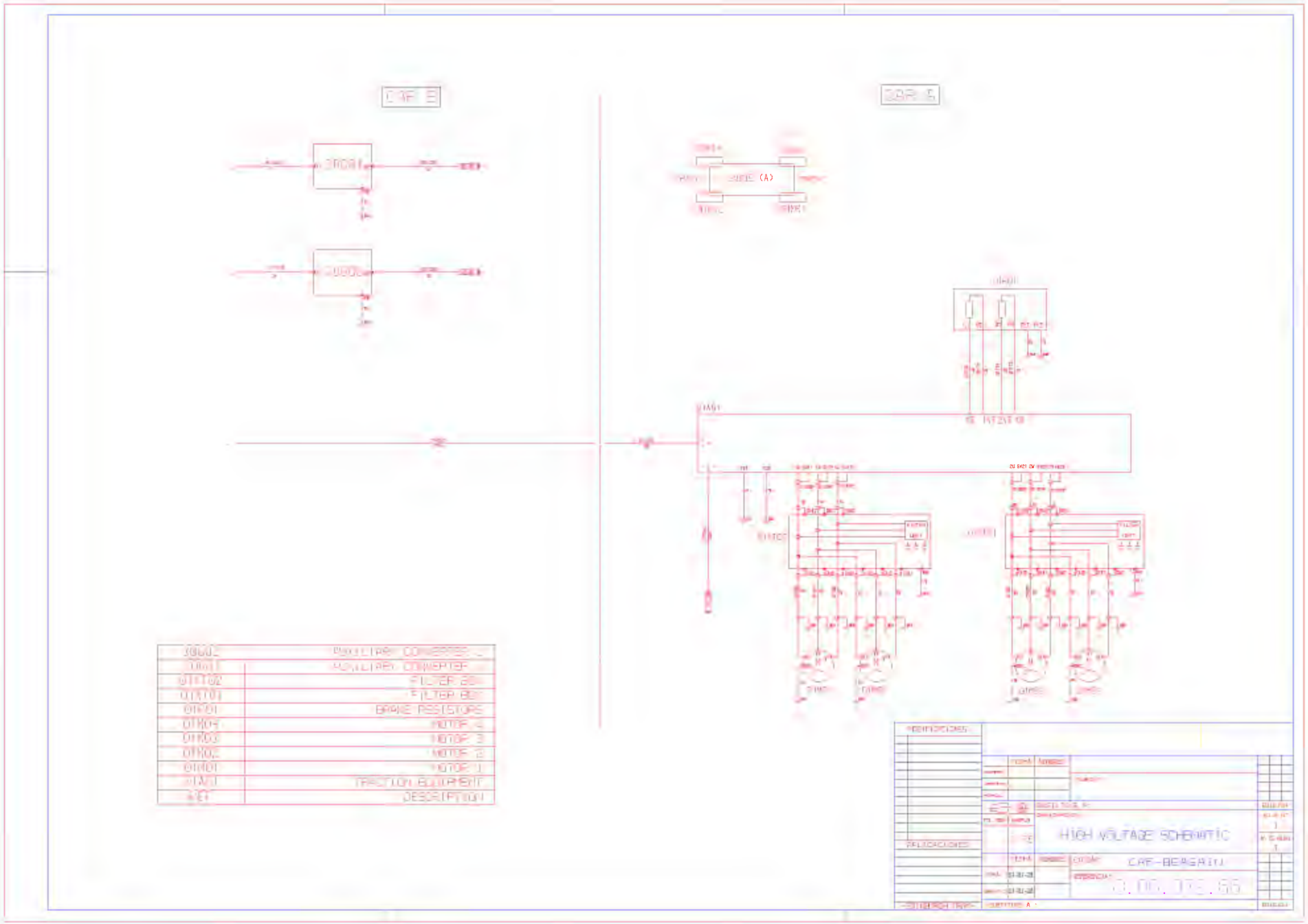

3BGD2	PWM LINE CONVERTER 2
3BGD1	PWM LINE CONVERTER 1
01K102	FILTER BOX
01K101	FILTER BOX
01K01	BRAKE RESISTORS
01M04	MOTOR 4
01M03	MOTOR 3
01M02	MOTOR 2
01M01	MOTOR 1
01M01	TRACTION EQUIPMENT
ADET	DESCRIPTION

USB00000086_0274

REF	DESCRIPTION
[illegible]	[illegible]
[illegible]	[illegible]
[illegible]	AUXILIARY CONVERTER FUSE
[illegible]	AUXILIARY CONVERTER FUSE
[illegible]	SURGE ARRESTER
[illegible]	FUSE BOX
REF	DESCRIPTION

HIGH VOLTAGE SCHEMATIC

CAF-BERGAMO

USB00000086_0275

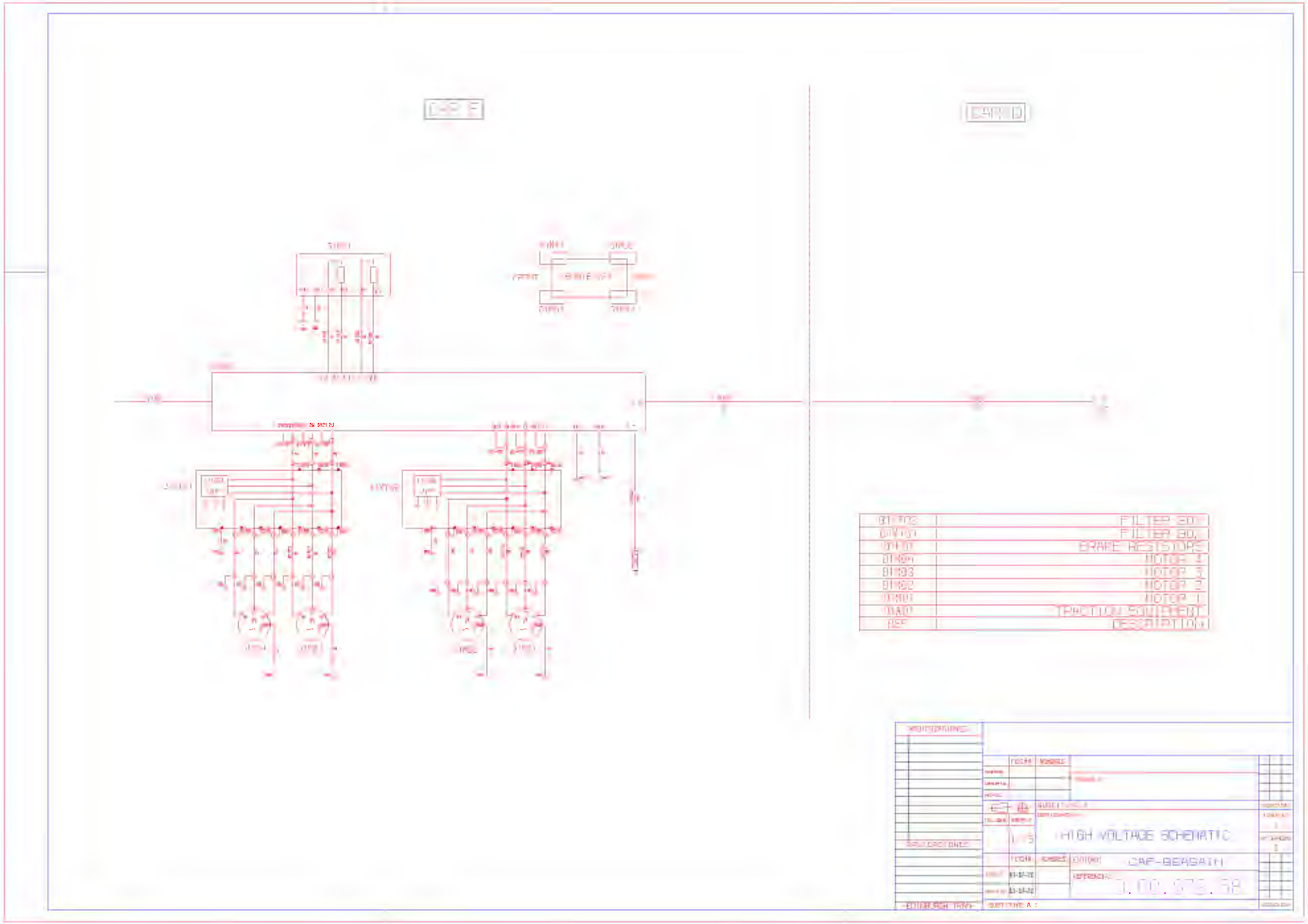

USB00000086_0276

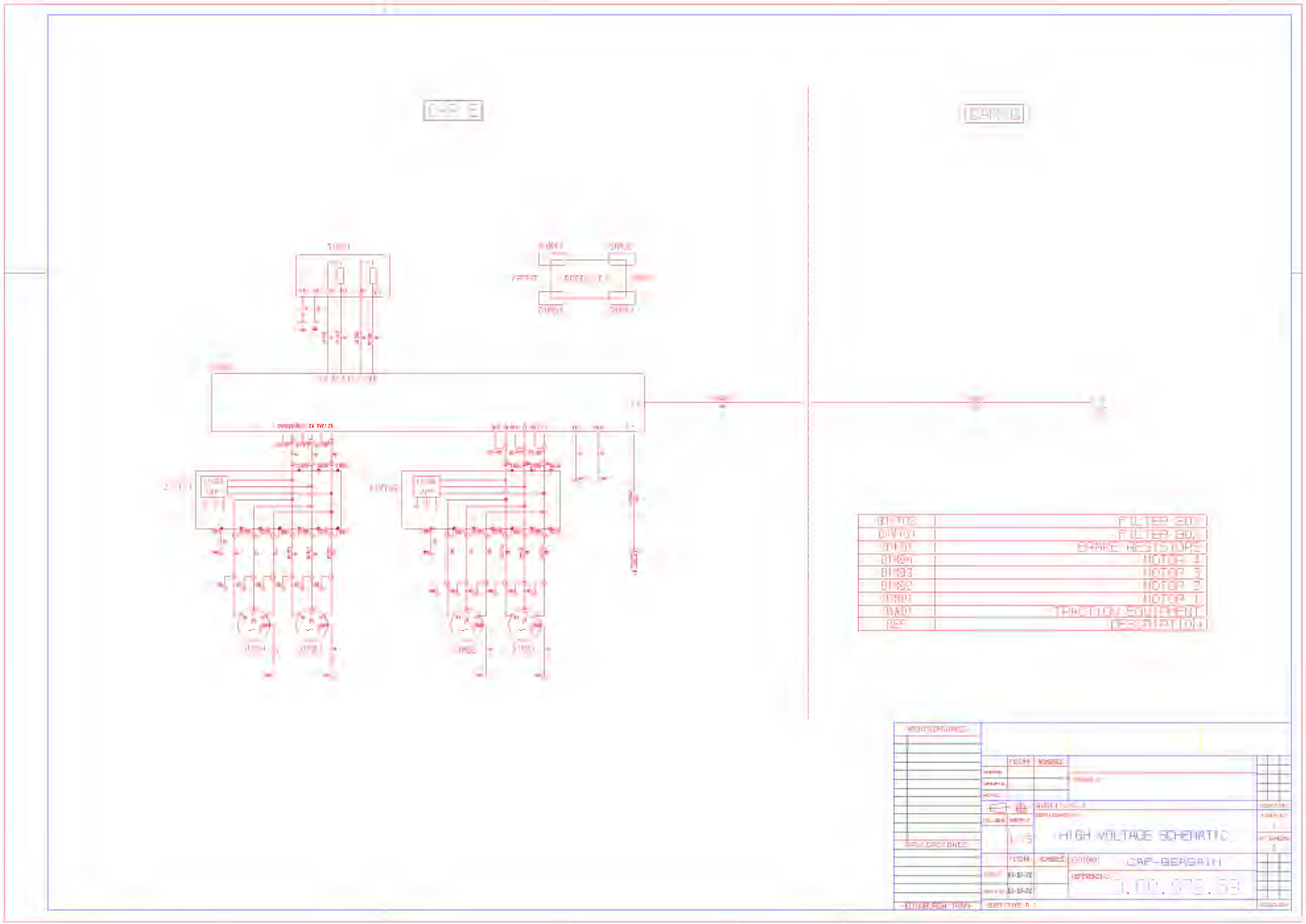

USB00000086_0277

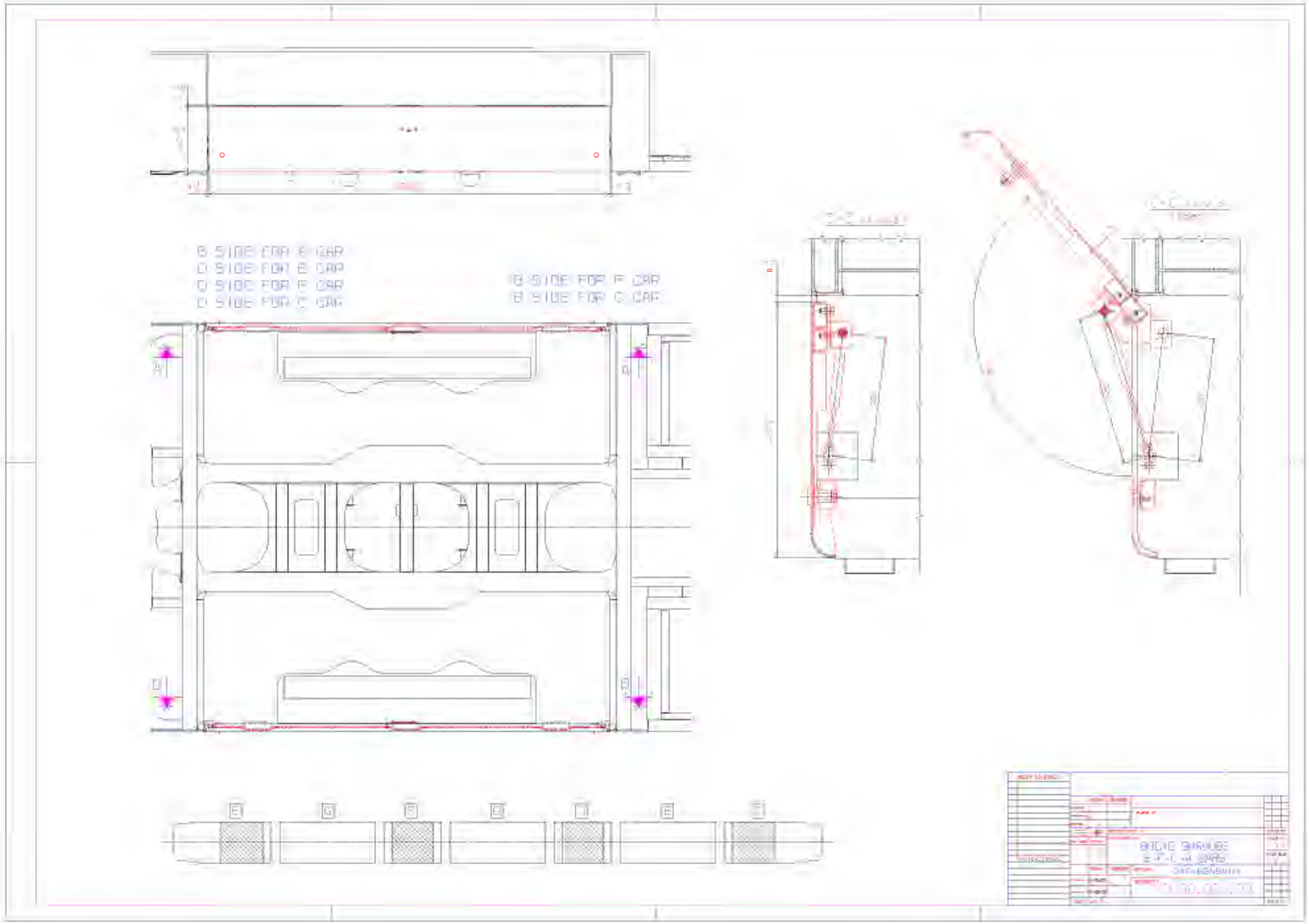

USB00000086_0278

Este documento es propiedad de CAF, S.A.
La reproducción, total o parcial o su uso por terceras personas, sin autorización previa escrita, no está permitido.

USB00000086_0280

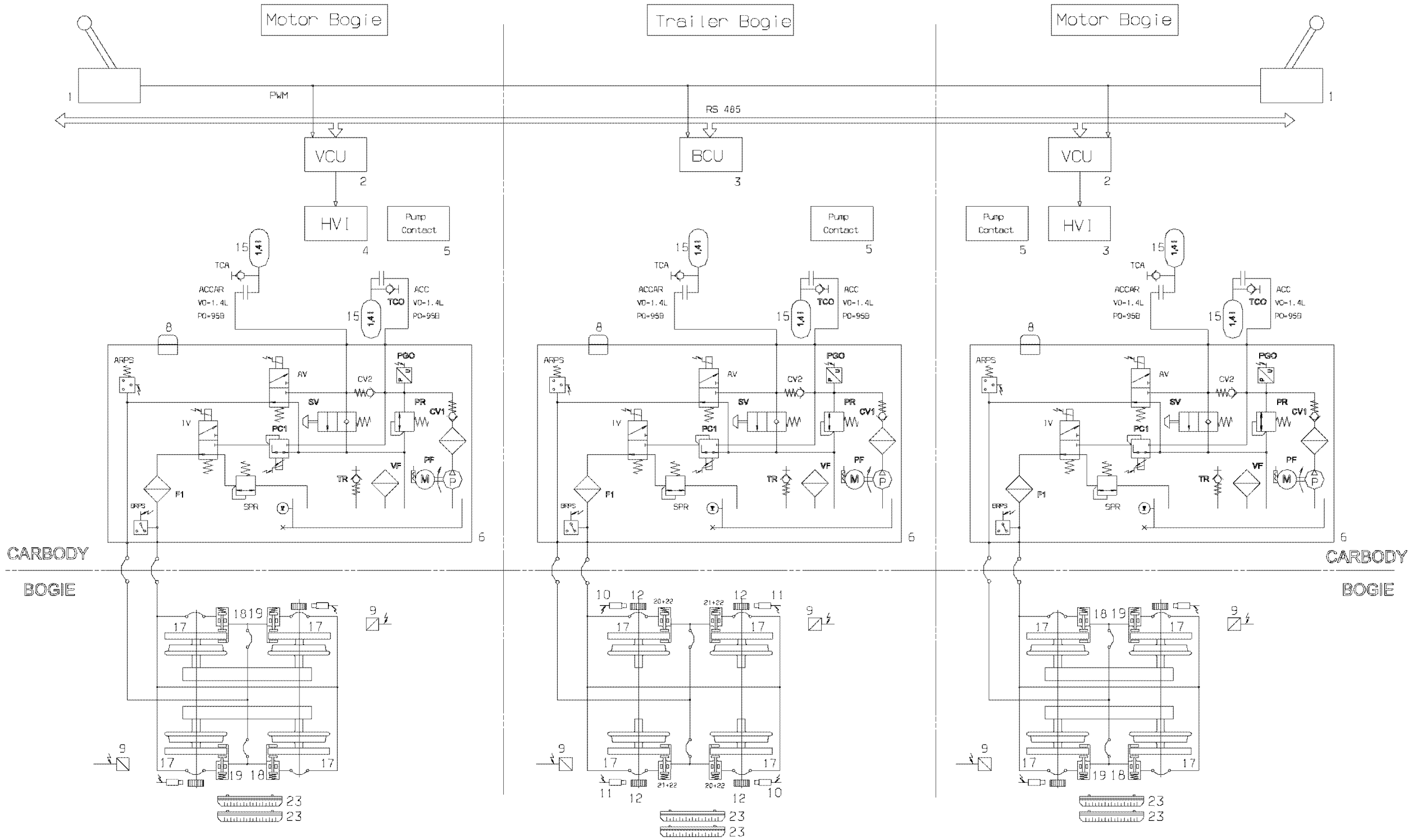

CONFIGURATION

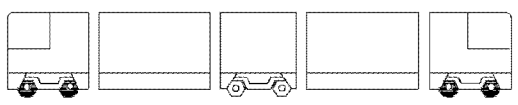

	H	25/08/04	G. DUBOIS	POULIL	Up-dated for accumulator inflated pressure
	G	01/06/04	G. DUBOIS	POULIL	Up-dated according to CAF email on 25/05
	F	18/05/04	G. DUBOIS	POULIL	Up-dated further to distance sensor modification
	E	19/04/03	G. DUBOIS	POULIL	Up-dated according to meeting dated on 18th March 2004
	D	13/01/04	M. POULIL	POULIL	Up-dated for distance sensor
	C	27/11/03	M. POULIL	POULIL	Up-dated for speed sensor reference
	B	28/11/03	M. POULIL	POULIL	Up-dated according to MT comments
	A	07/12/03	M. POULIL	POULIL	First Release
NUMB.	LIV	DATE	DRAWN	APP.	DESCRIPTION

00	ESQUEMA HIDRAULICO FRENO	1			0.000
MARCA	DESCRIPCION	CANT.	CODIFICACION O NORMA / Nº DIBUJO O CALIDAD MATERIAL:	MATERIAL	PESO UNITARIO / NOTAS Y OBSERVACIONES / NR. COMERC.

MODIFICACIONES
A 13-05-04. Actuali. plano. EST.S
B 16-09-04. Actuali. plano. EST.S

SAB WABCO — SH-3-158-7 — Ed. H

GUADALMETRO — PLANO Nº:

	FECHA	NOMBRES
COMPR.		
VERIFIC.		
HOMOL.		

SUSTITUYE A: — EDICION

TOL. GEN. — ESCALA — DESIGNACION: ESQUEMA HIDRAULICO FRENO — HOJA Nº 1 — Nº HOJAS 1

Nº F 00-037

	FECHA	NOMBRES
DIBUJ.	30-01-04	J.M Garcia
VERIFIC.	30-01-04	LAURENTZI

ENTIDAD: CAF

REFERENCIA: Q. 16. 21. 150 — B

SUSTITUYE A: — EDICION

USB00000086_0282

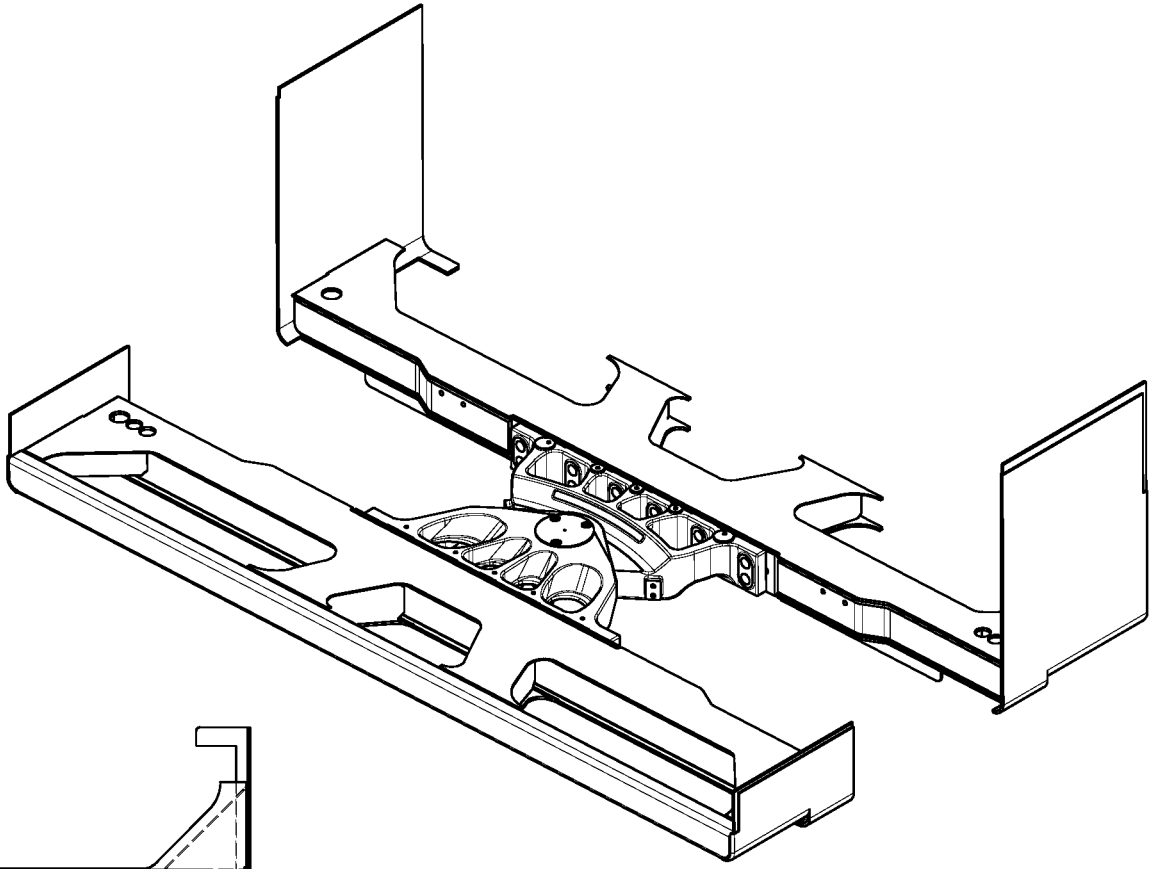

COCHES A-C-E

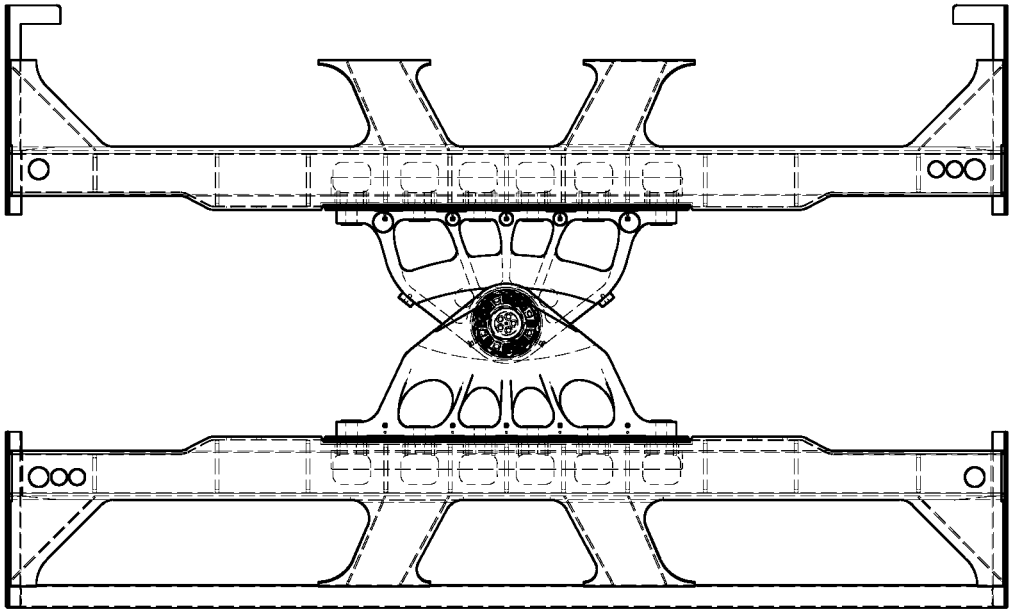

COCHES B-D

Para detalles de montaje ver plano Q.19.42.010.01

MARCA	DESCRIPCION	CANT.	CODIFICACION O NORMA / N° DIBUJO O CALIDAD MATERIAL:	MATERIAL O REFERENCIA	PESO UNITARIO / NOTAS Y OBSERVACIONES	(mm) DIMENSIONES
01	ROTULA	1	Q.19.42.010.01		150.9	
00	MONTAJE ROTULA	1			150.9	

MODIFICACIONES

	FECHA	NOMBRES	
COMPR.			metro Málaga
VERIFIC			PLANO N°
HOMOL.			
			SUSTITUYE A:
TOL.GEN	ESCALA		DESIGNACION:
NF F 00-037	1/10		MONTAJE ROTULA
	FECHA	NOMBRES	ENTIDAD: CAF
DIBUJ.	26-07-07	10550	REFERENCIA: Q.19.42.001
VERIFIC.	26-07-07	10244	
SUSTITUYE A :			

EDICION

HOJA N°

N° DE HOJAS 0

A2

EDICION

Este documento es propiedad de CAF, S.A.
La reproduccion, transmision o uso por terceras personas de este documento, o de su contenido, no esta permitido sin expresa autorizacion escrita.

USB00000086_0283

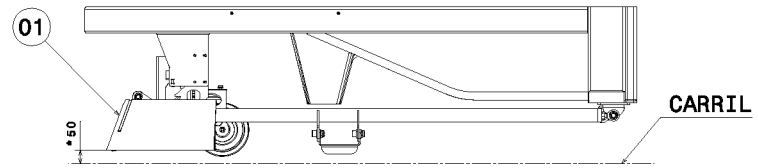

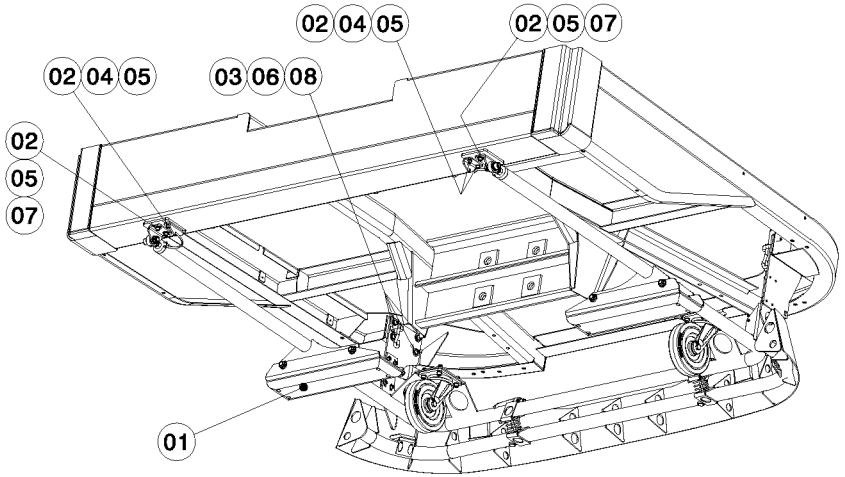

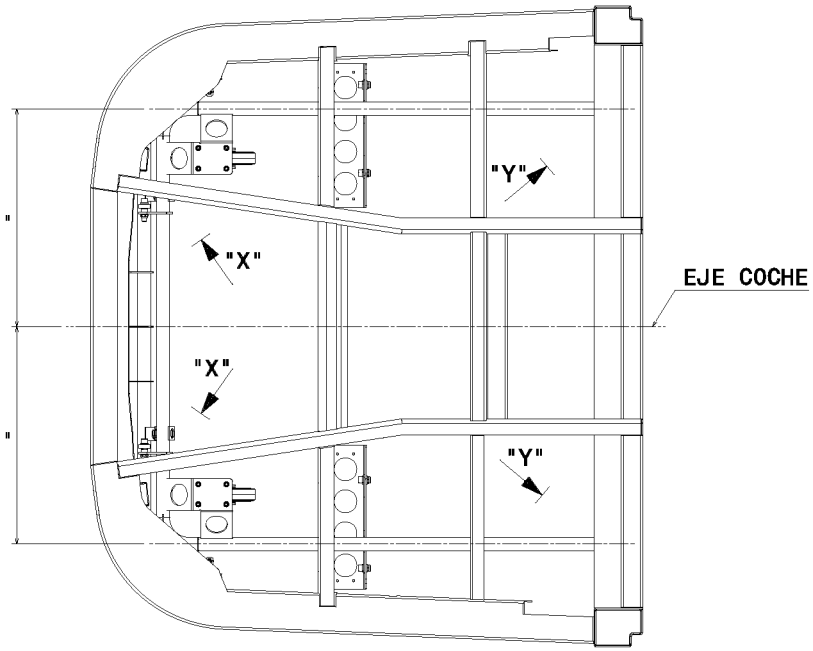

"Y"
1:2

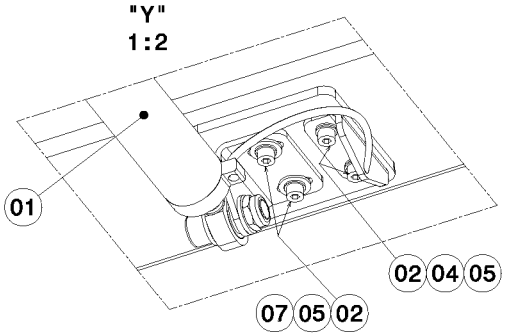

"X"
1:5

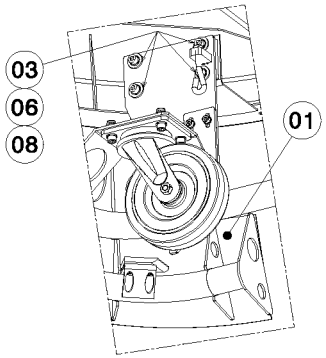

MARKA	DESKRIBAPENA	KOP.	NORMA EDO KODEA	MATERIALA/ERREFERENTZIA	PISUA (Kg.)	NEURRIAK (mm.)
08	ARANDELA PLANA 10	8	ISO 7093	A2-70 ISO 3506	0.012	
07	ARANDELA PLANA 8	4	ISO 7093	A2-70 ISO 3506	0.008	
06	TORN CAB HUE HEX M10X30	8	ISO 4762	A2-70 ISO 3506 -	0.028	
05	TORN CAB HUE HEX M8X25	8	ISO 4762	A2-70 ISO 3506 -	0.016	
04	ARANDELA PLANA M8	4	NFE 25514 M	A2-70 ISO 3506	0.002	
03	ARAND CONTACT MED M10	8	X.55.00804.09	NOMEL 55.10.22.83	0.008	
02	ARAND CONTACT MED M8	8	X.55.00804.07	NOMEL 55.08.21.83	0.003	
01	SISTEMA ANTIATRAPAMIENTO	X	Q.20.23.040.00		92.00	
00	MONT.SIST.ANTIATRAPAMIENTO	1			92.55	

ALDAKETAK	ESKALA 1/10	HORNITZAILEA:	
	PERDOI OROKORRA NF E 00-037	MONT.SIST.ANTIATRAPAMIENTO	
		HARRAPA.EKIDETEKO SIST.MONT.	
	MARRAZTUA 10741 2007-11-06	GAINBEGIR. 10491 2007-11-08	EGILEA: CAF
	ERAKUNDEA: EuskoTren	...ORDEZTEN DU Q.20.23.030	ORRI ZK. 1 ORRI KOPURU 1
ERABILERAK:	GASTEIZko TRAMBIA	A1	

Dokumentu honen jabea CAF, S.A.K. Dokumentu, tresnaria edo aplikazioa ezin da erabili, kopiatu edo aplikazioa ezin da zabaldu CAF, S.A.-ren baimenik gabe.
Este documento es propiedad de CAF, S.A. No puede ser utilizado, copiado o ser objeto de divulgación sin el consentimiento de CAF, S.A.

* EL SISTEMA ANTIATRAPAMIENTO PERMITE UNA REGULACION DE ALTURA A CARRIL DE 50mm A 150mm.

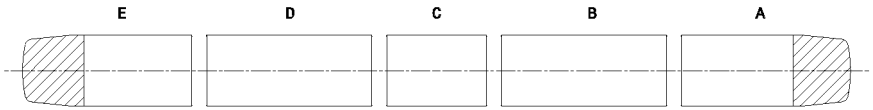

USB00000086_0284

USB00000086_0285

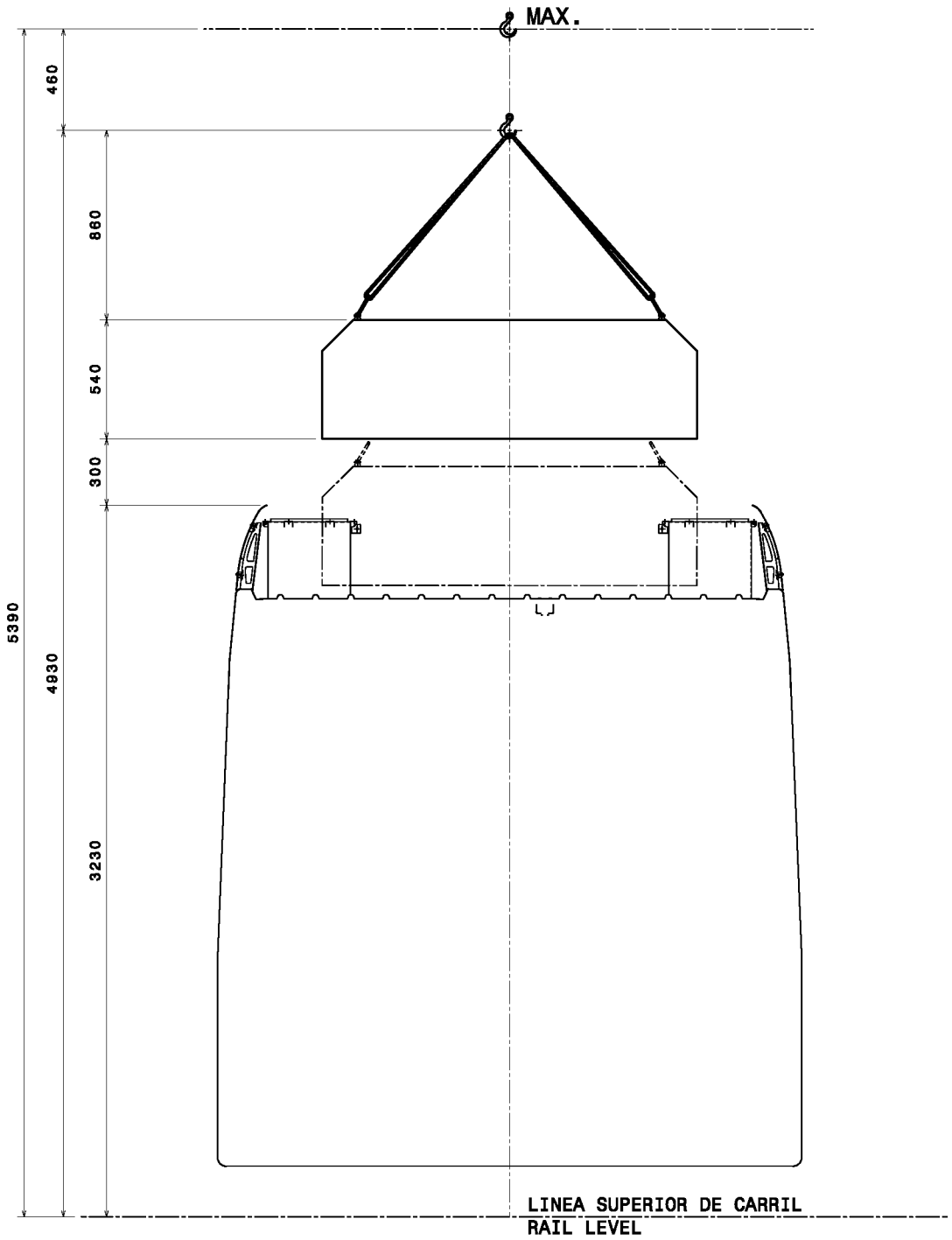

Este documento es propiedad de CAF, S.A.
La reproduccion, transmision o uso por terceras personas de este documento, o de su contenido, no esta permitido sin expresa autorizacion escrita.

The Ownership of this document belongs to CAF, S.A.
Any reproduction, transmission or use by third parties of this document contents, whether total or partial, is not authorized without previous contract or written authorization.

ITEM	DESCRIPTION	QTY.	CODIFICATION OR STD.	MATERIAL	Kg. WEIGHT	mm. DIMENS.
			DRAWING N° OR MATERIAL QUALITY:		NOTES AND OBSERVATIONS	

MODIFICATIONS

	DATE	NAMES
CHECK.		
VERIF.		
HOMOL.		

DRAWN N°

SUBSTITUTES TO:

EDITION

DRAWING TITLE: GRUA HVAC

GEN. TOL.	SCALE
ISO 2768 ck	1/15

SHEET 1

N° SHEETS 1

	DATE	NAMES
DRAWN.	17-03-08	F.CATIVIELA
VERIF.	17-03-08	I.AGUELO

CAF CONSTRUCCIONES Y AUXILIAR DE FERROCARRILES, S.A.

A2

REFERENCE: Q.22.00.300

SUBSTITUTES TO :

EDITION

USB00000086_0286

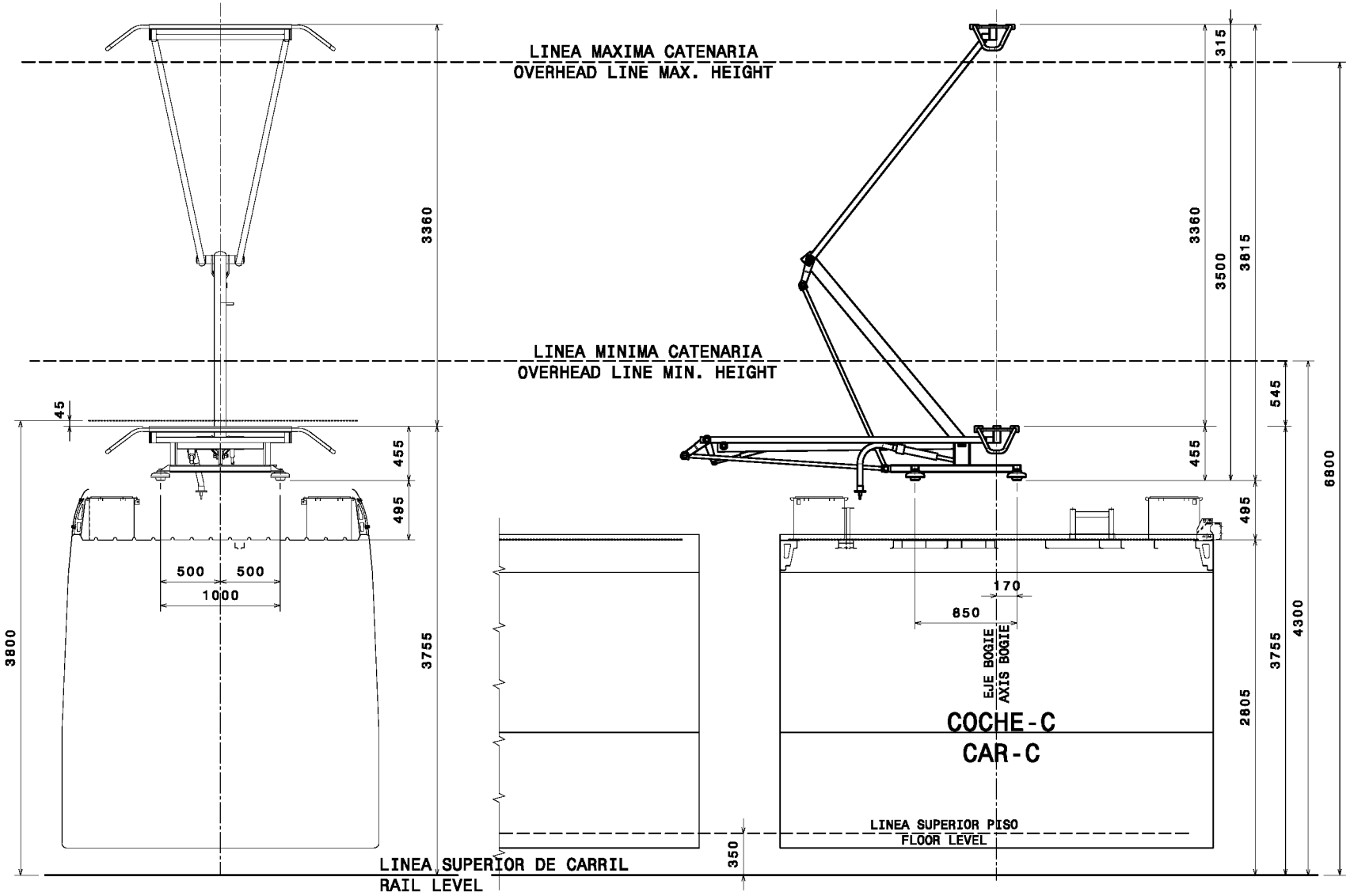

Este documento es propiedad de CAF, S.A.
La reproducción, transmisión o uso por terceras personas de este documento, o de su contenido, no esta permitido sin expresa autorización escrita.

The Ownership of this document belongs to CAF, S.A.
Any reproduction, transmission or use by third parties of this document contents, whether total or partial, is not authorized without previous contract or written authorization.

ITEM	DESCRIPTION	QTY.	CODIFICATION OR STD.	MATERIAL	Kg. WEIGHT	mm. DIMENS.
			DRAWING N° OR MATERIAL QUALITY:		NOTES AND OBSERVATIONS	

MODIFICATIONS

	DATE	NAMES
CHECK.		
VERIF.		
HOMOL.		

DRAWN N°

Trams

SUBSTITUTES TO:

EDITION

DRAWING TITLE:

TRAZ. PANTOGRAFO CUBIERTA
ASSEMBLY OF PANTOGRAPH

GEN. TOL.	SCALE
ISO 2768 ck	1/25

SHEET 1

N° SHEETS 1

	DATE	NAMES
DRAWN.	17-03-06	A.ORNAD
VERIF.	17-03-06	I.AGUELO

CAF CONSTRUCCIONES Y AUXILIAR DE FERROCARRILES, S.A.

A2

REFERENCE: Q.22.00.301

SUBSTITUTES TO :

EDITION

USB00000086_0287

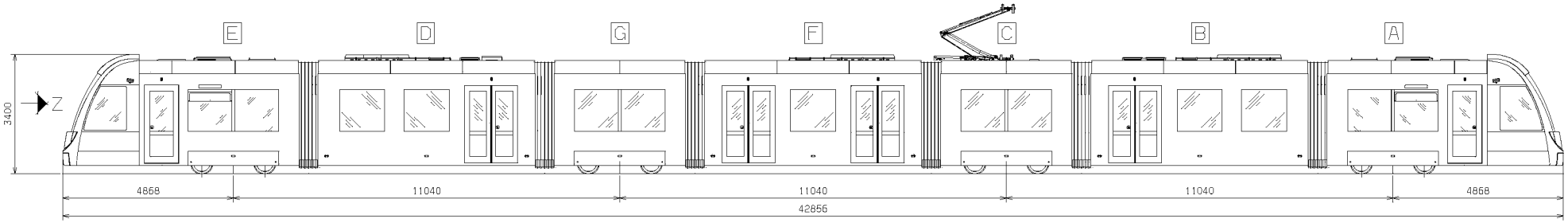

LONGITUDINAL SECTION

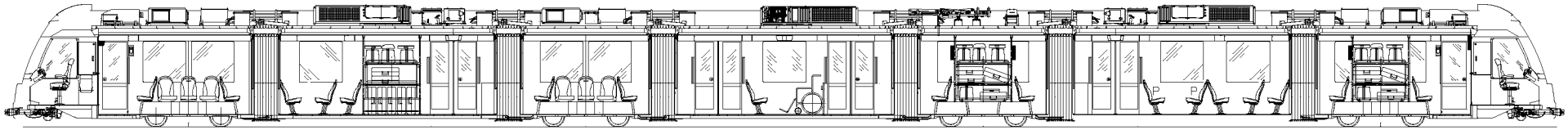

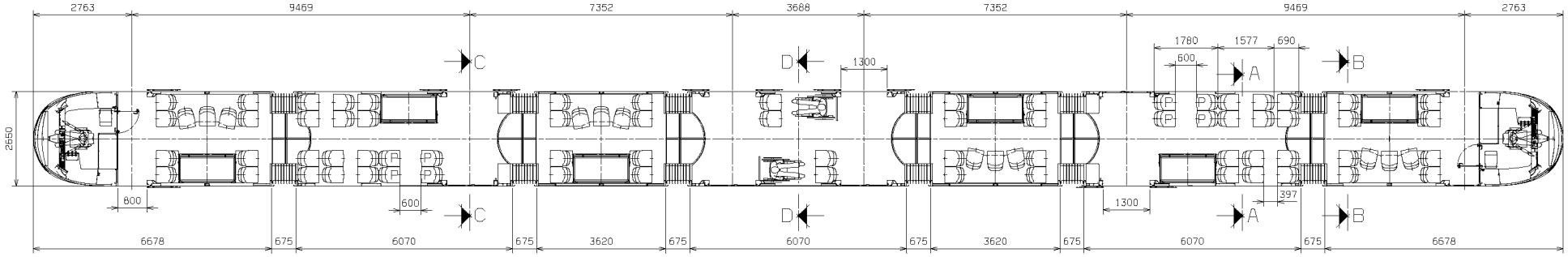

P: PRIORITY SEAT

VERSION 2
PLANO PROVISIONAL

N° SEAT QTY.		
	4 PERSONS/SQ.M.	6 PERSONS/SQ.M.
SEATING PASSENGERS	80+(2 PMR)	80+(2 PMR)
STANDING PASSENGERS	168	252
TOTAL PASSENGERS	248+(2 PMR)	332+(2 PMR)

MARCA	DESCRIPCION	CANT.	Nº SUMINISTRADOR O NORMA FABRICANTE / Nº DIBUJO O CALIDAD MATERIAL	PESO UNITARIO	NOTAS Y OBSERVACIONES

MODIFICACIONES

	FECHA	NOMBRES
COMPR.		
VERIFIC.		
NORMAL.		

PLANO Nº

SUSTITUYE A:

EDICION

DESIGNACION:

CONJUNTO UNIDAD
UNIT ASSEMBLY

TOL. GEN.	ESCALA
NF F 00-037	1/60

HOJA Nº 1
Nº DE HOJAS 2

APLICACIONES

	FECHA	NOMBRES
DIBUJ.	29.02.08	
VERIFIC.	29.02.08	

ENTIDAD: CAF-ZARAGOZA

REFERENCIA: Q.22.00.801

-EDINBURGH TRAM-

SUSTITUYE A :

EDICION

23389 FRAME 1 MARCH 18, 2008 13.25.56

USB00000086_0288

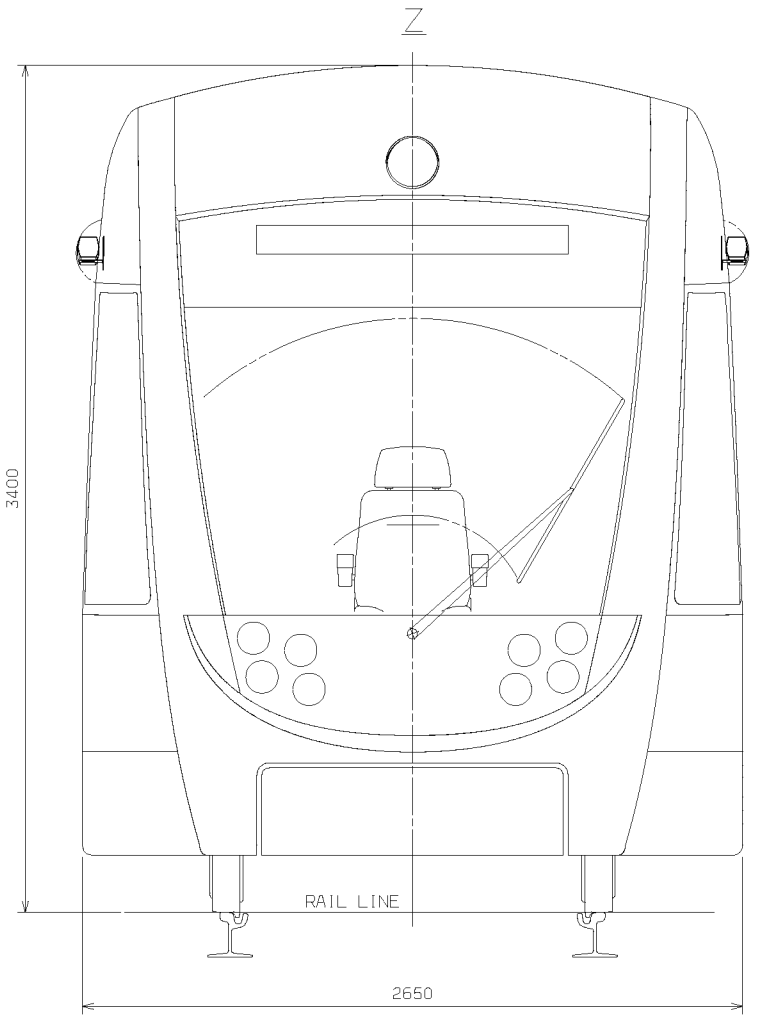

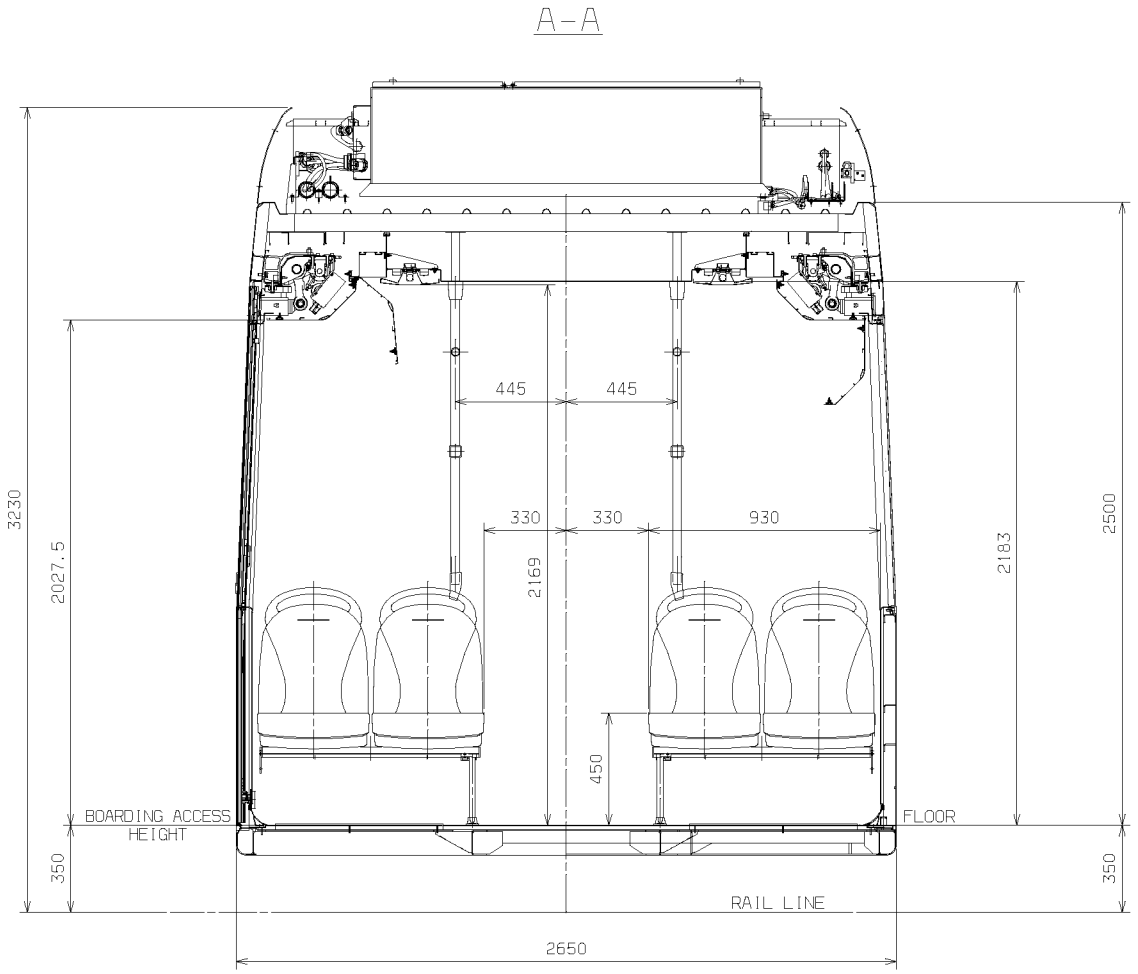

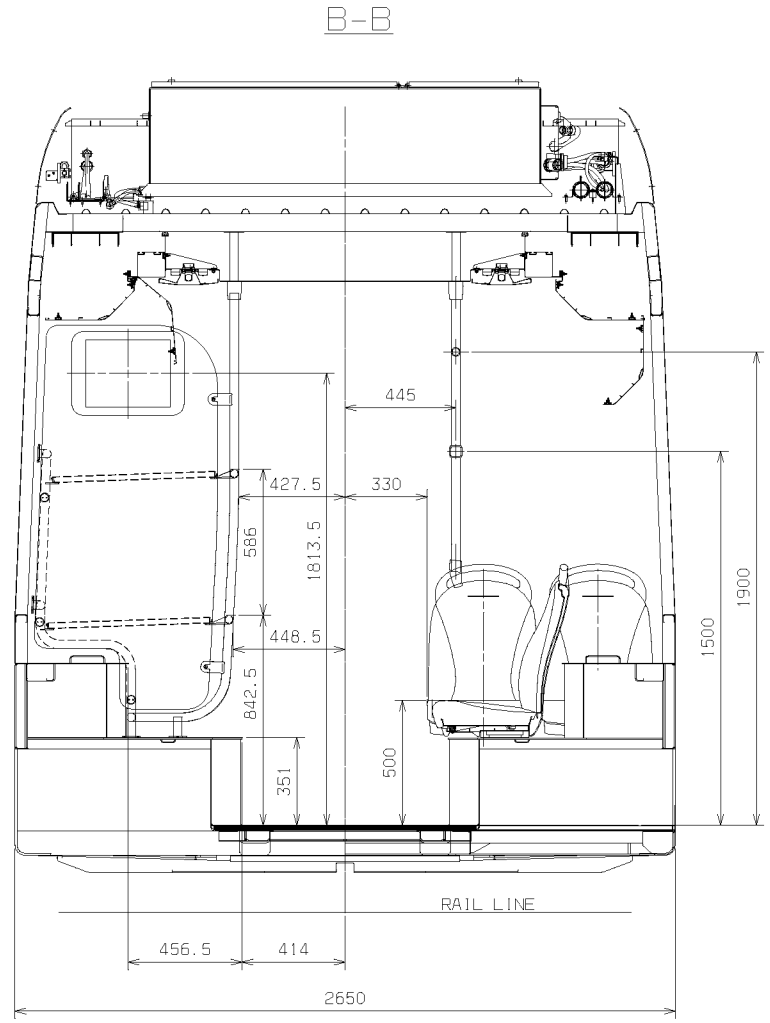

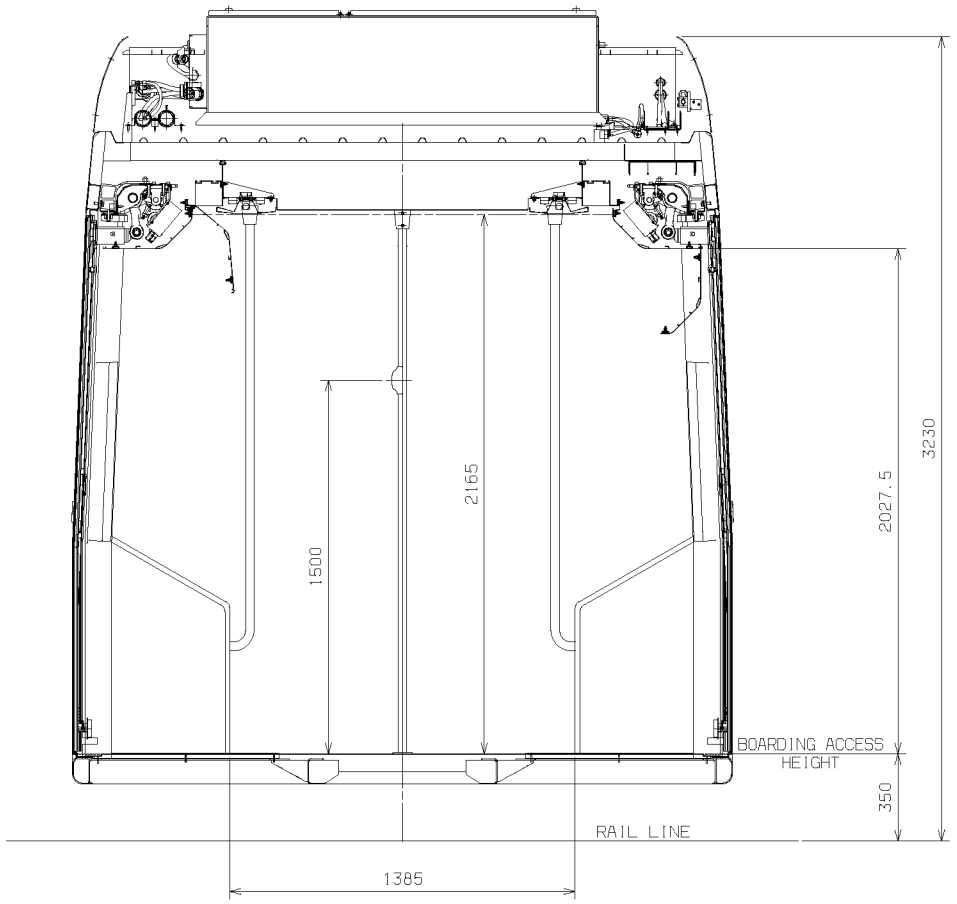

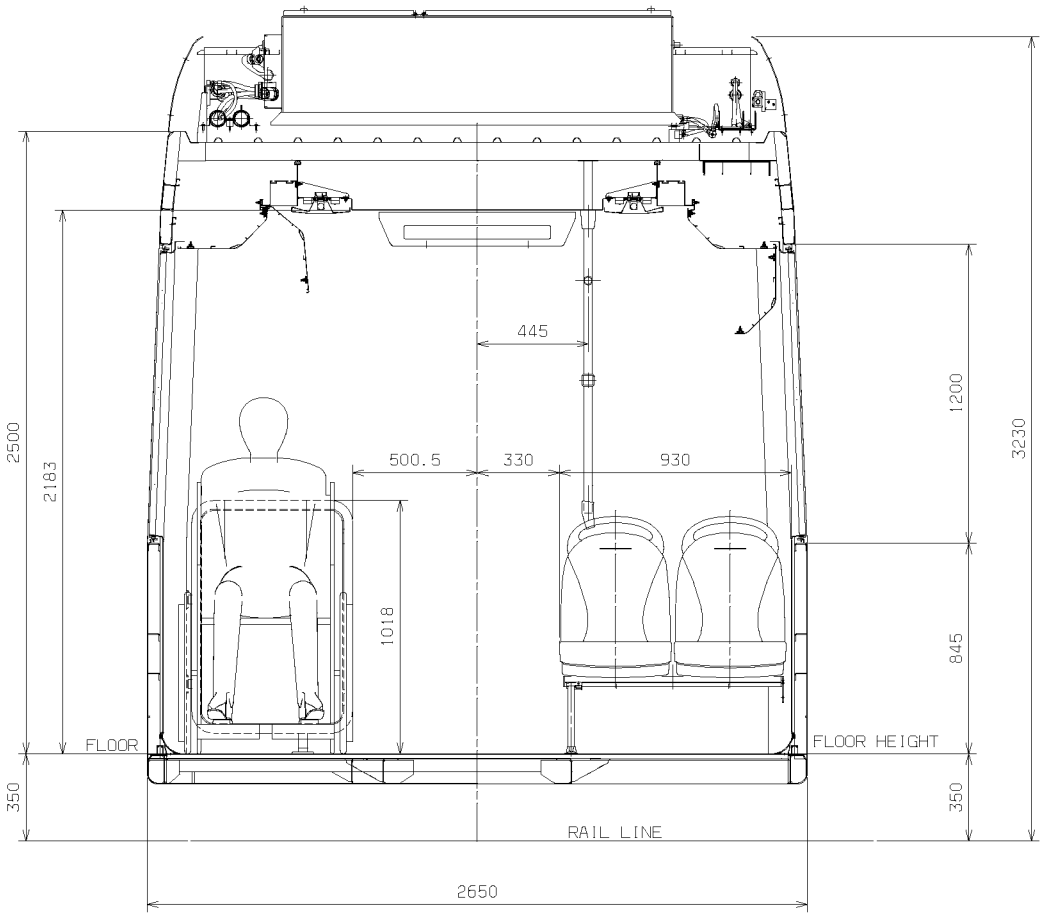

VERSION 2
PLANO PROVISIONAL

MARCA	DESCRIPCION	CANT.	N° SUMINISTRADOR O NORMA FABRICANTE / N° DIBUJO O CALIDAD MATERIAL	PESO UNITARIO / NOTAS Y OBSERVACIONES

MODIFICACIONES

	FECHA	NOMBRES	
COMPR.			PLANO N°
VERIFIC.			
NOMOL.			

SUSTITUYE A: EDICION

TOL. GEN.	ESCALA	DESIGNACION:	HOJA N°
NF F 00-037	1/15	CONJUNTO UNIDAD UNIT ASSEMBLY	2
			N° DE HOJAS 2

APLICACIONES

	FECHA	NOMBRES	ENTIDAD: CAF-ZARAGOZA
DIBUJ.	22.01.08		REFERENCIA: Q. 22. 00. 801
VERIFIC.	22.01.08		

-EDINBURGH TRAM- SUSTITUYE A : EDICION

23389 FRAME 1 MARCH 18, 2008 13.35.33

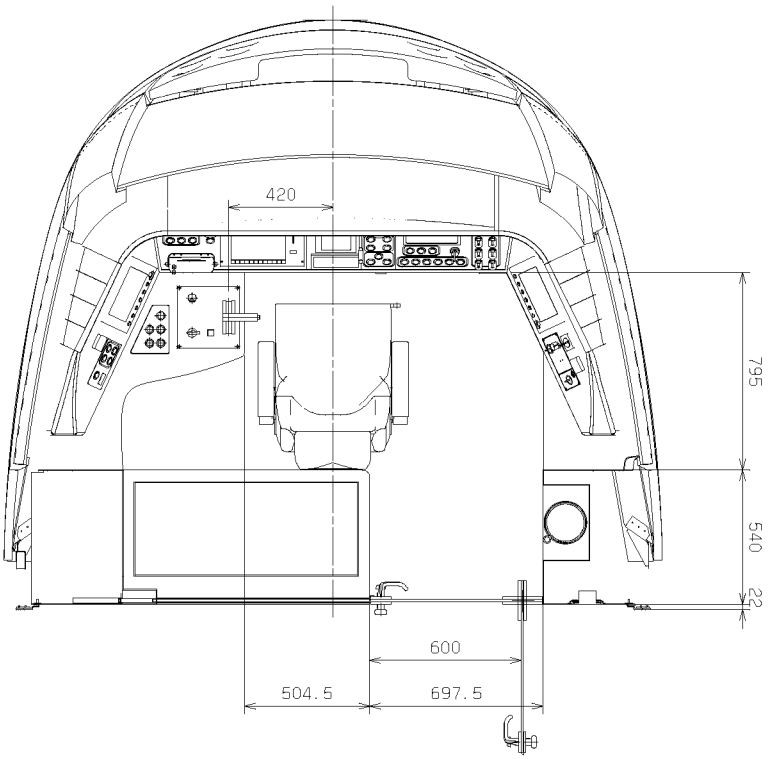

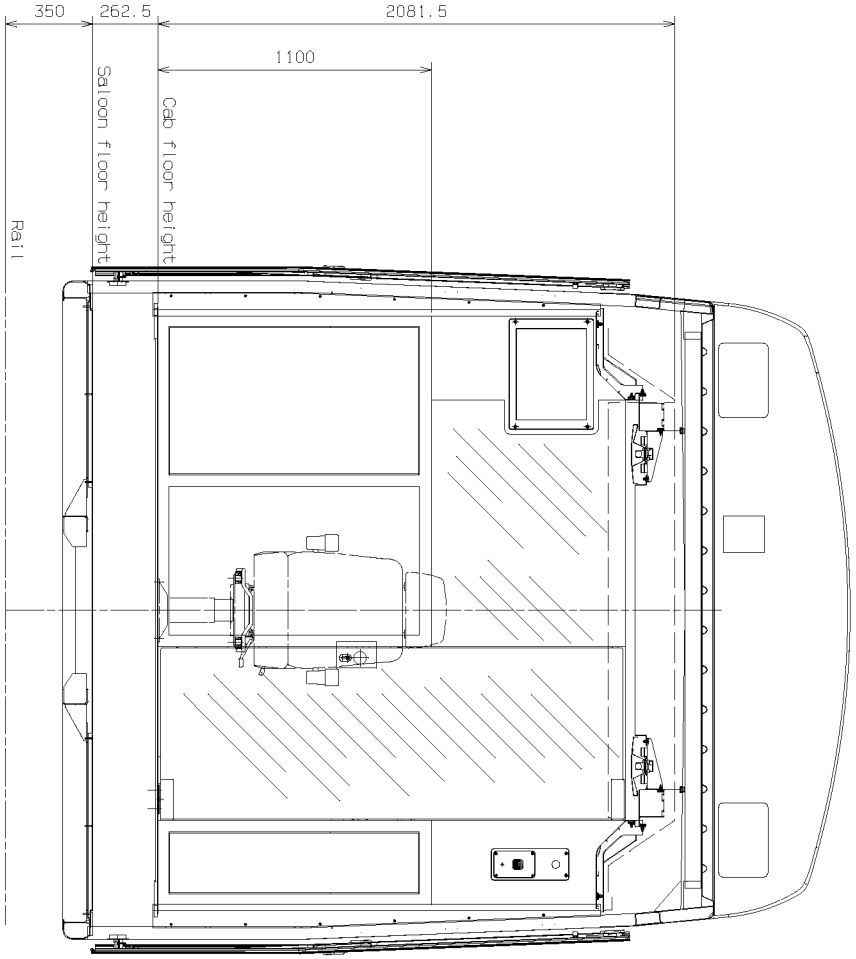

MODIFICACIONES			
APLICACIONES			
		COMPRB.	FECHA
		VERIFIC.	NOMBRES
		HOMOL.	
		SUSTITUYE A:	
		DESIGNACION:	
		PLANO Nº	
		TOL. GEN.	ESCALA
		1/10	
		FECHA	NOMBRES
		18-03-08	
		DIBUJ.	
		18-03-08	
		VERIFIC.	
		ENTIDAD:	
		CAF-BEASAIN	
		REFERENCIA:	
		Q.22.00.810	
		CAB LAYOUT	
		EDICION	
		HOJA Nº	
		1	
		Nº DE HOJAS	
		1	
-EDINBURGH TRAM-			
SUSTITUYE A:			
Q.00.072.17 ED.-A			
EDICION			

USB00000086_0289

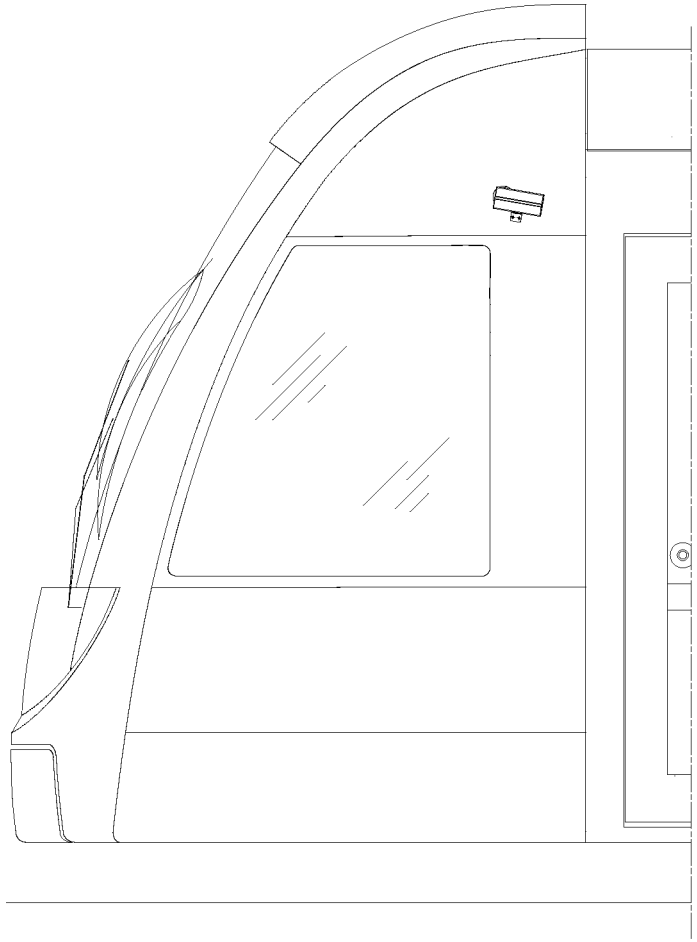

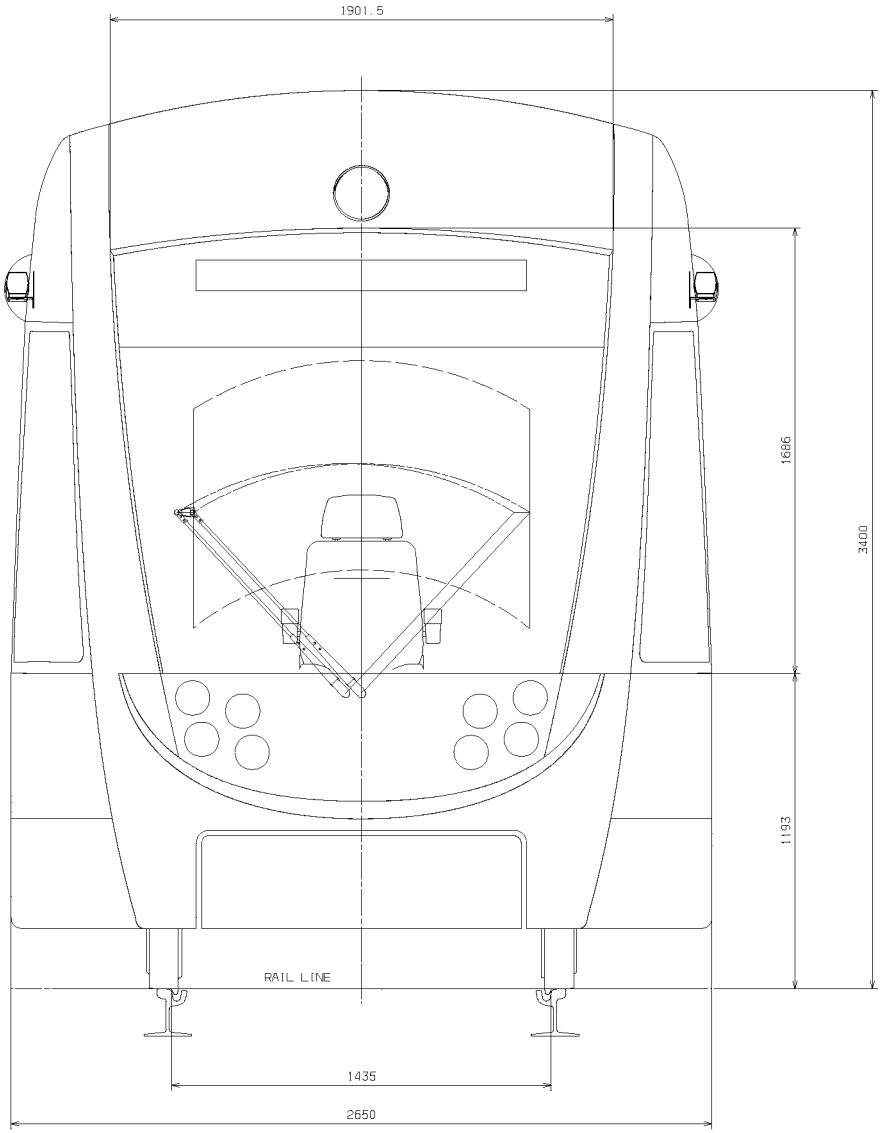

USB00000086_0290

MODIFICACIONES				
	FECHA	NOMBRES		
DIBUJ.			PLANO Nº	
VERIFIC.				
MONTAJ.				
			SUSTITUYE A:	EDICION
TOL. GEN.	ESCALA		DESIGNACION:	HOJA Nº
	1/10		CAB ARRANGEMENT	1
APLICACIONES				Nº DE HOJAS
				1
	FECHA	NOMBRES	ENTIDAD: CAF-BEASAIN	
DIBUJ.	17-03-08		REFERENCIA: Q.22.00.811	
VERIFIC.	17-03-08			
-EDINBURGH TRAM-	SUSTITUYE A :		Q.00.072.19 ED.-B	EDICION

23340 FRAME 1 MARCH 18, 2008 13.08.23

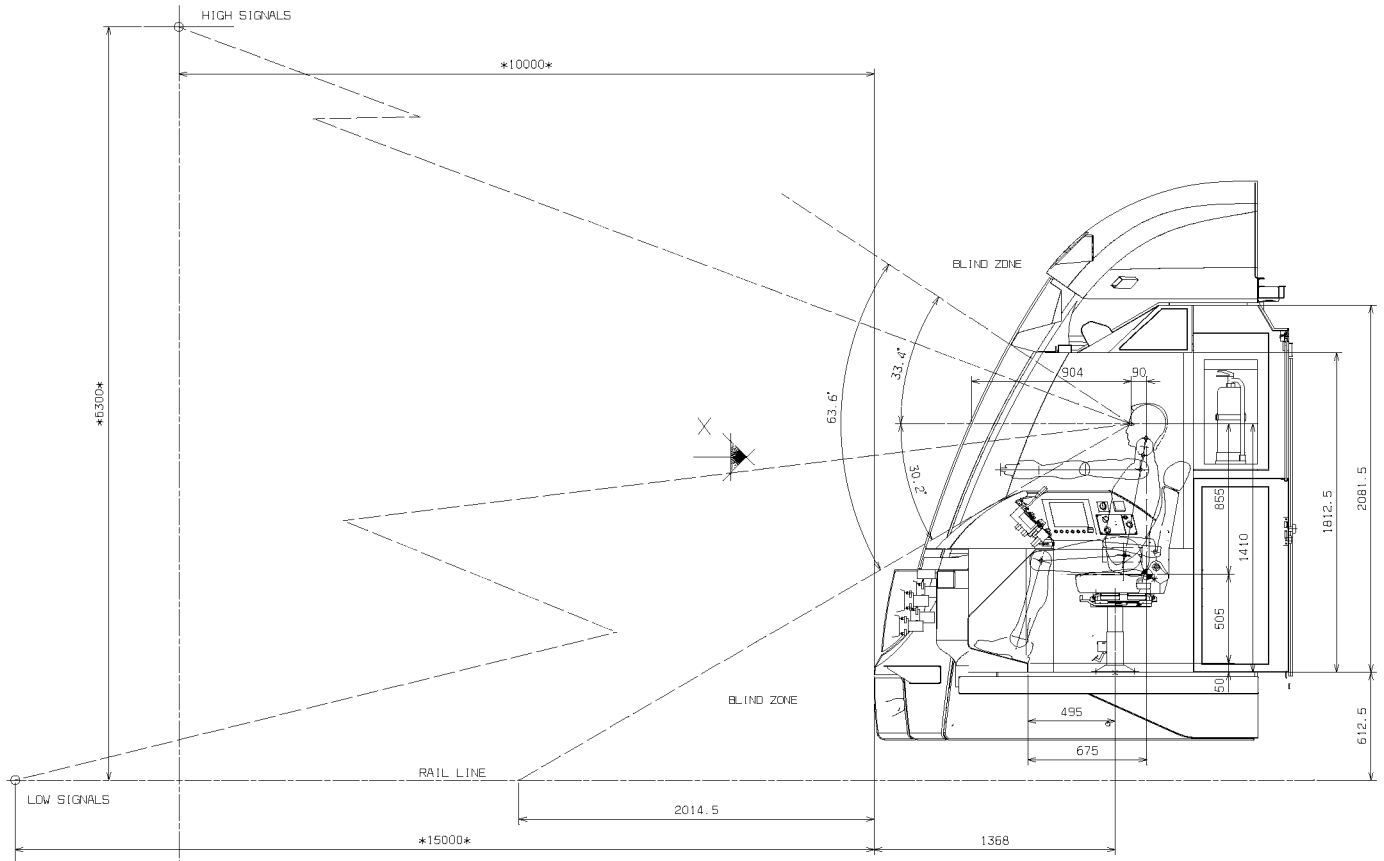

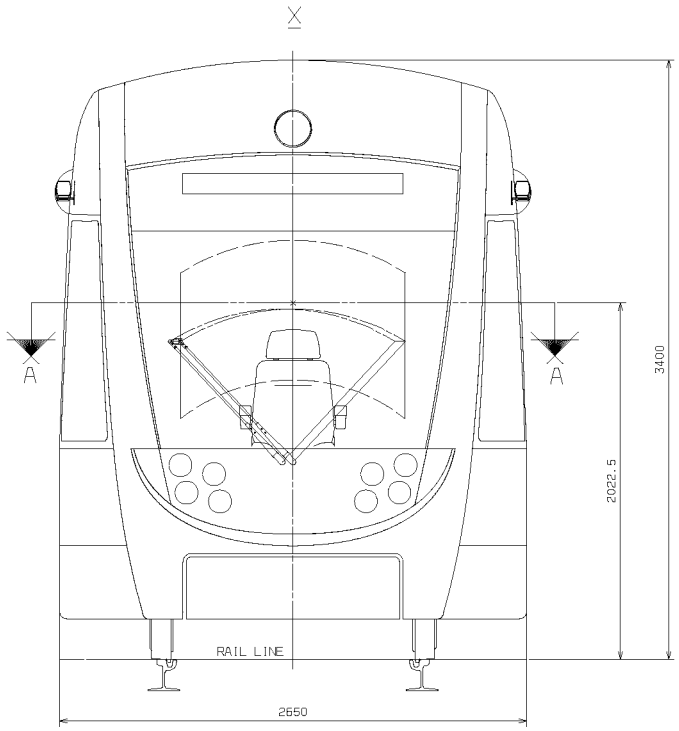

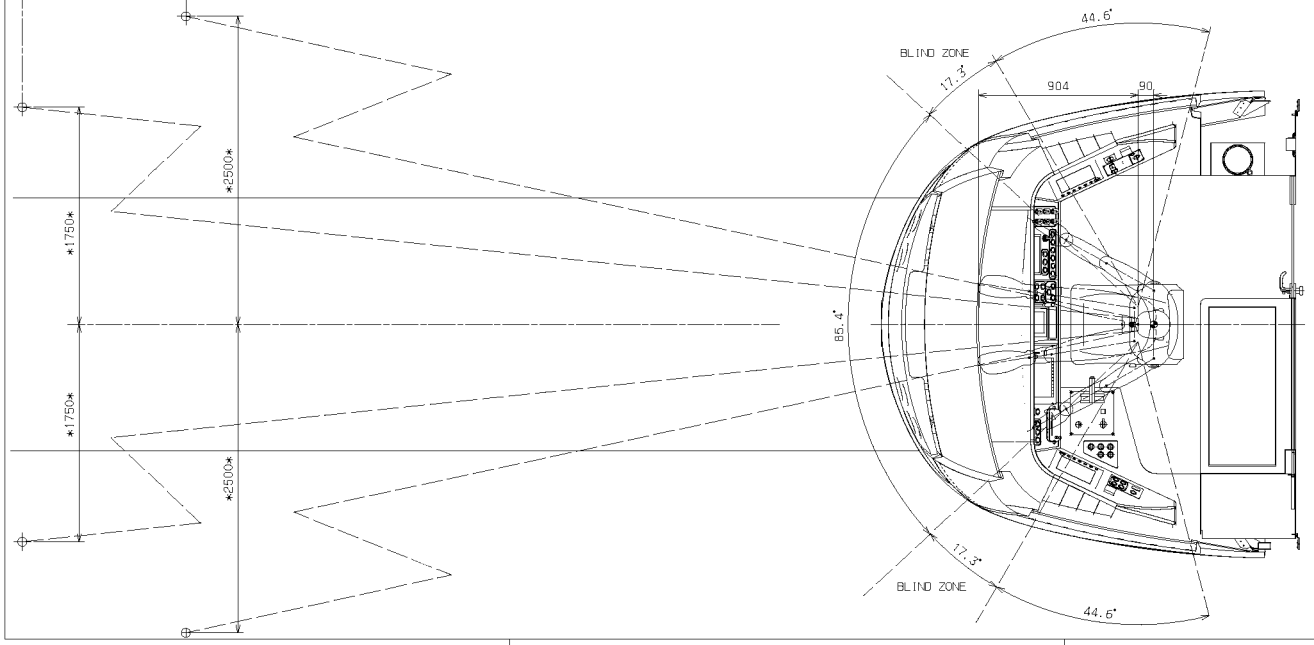

VISIBILITY ACCORDING STANDARD UIC 651

DRIVER HEIGHT: 1900 mm.

SECTION A-A AT 1410 mm FLOOR LEVEL

MODIFICACIONES				
	FECHA	NOMBRES		
	COMPR.		PLANO Nº	
	VERIFIC.			
	TRAZOL.			
			SUSTITUYE A:	EDICION
	TOL. GEN.	ESCALA	DESIGNACION:	HOJA Nº 1
APLICACIONES		1/15	DRIVER VISIBILITY	Nº DE HOJAS 2
	FECHA	NOMBRES	ENTIDAD: CAF-BEASAIN	
	DIBUJ.	17-03-08	REFERENCIA: Q.22.00.812	
	VERIFIC.	17-03-08		
-EDINBURGH TRAM-	SUSTITUYE A :		Q.00.072.19 ED.-B	EDICION

USB00000086_0291

23340 FRAME 1 MARCH 18, 2008 12.48.47

USB00000086_0292

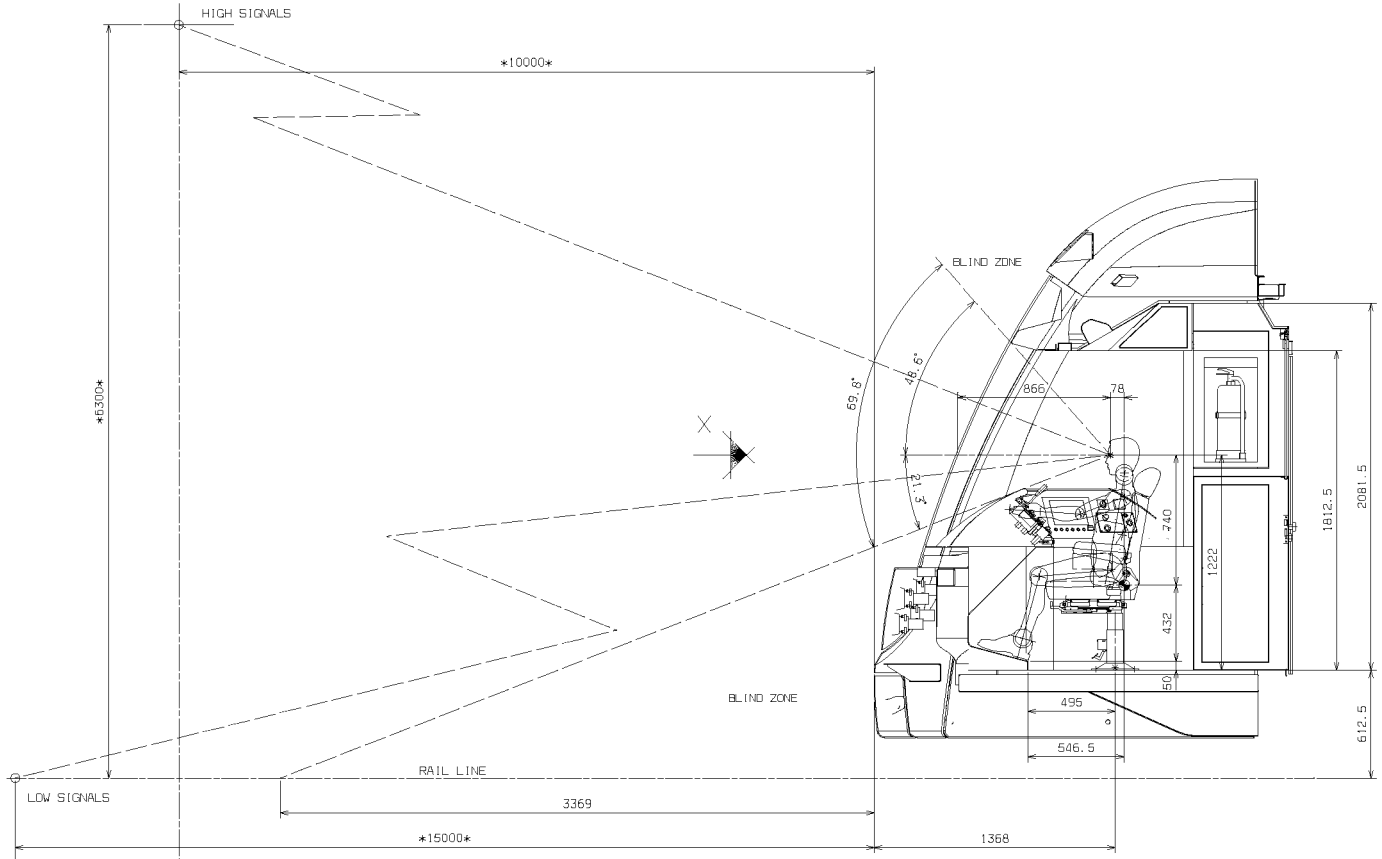

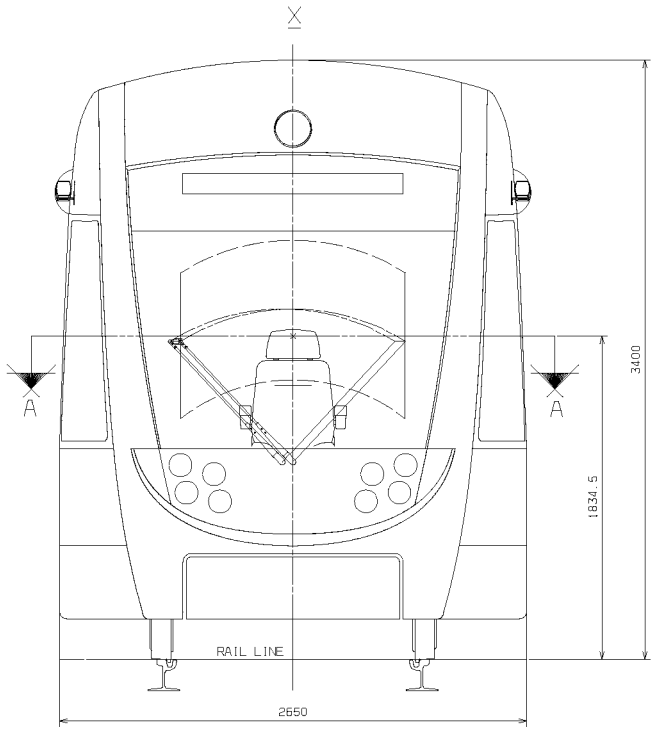

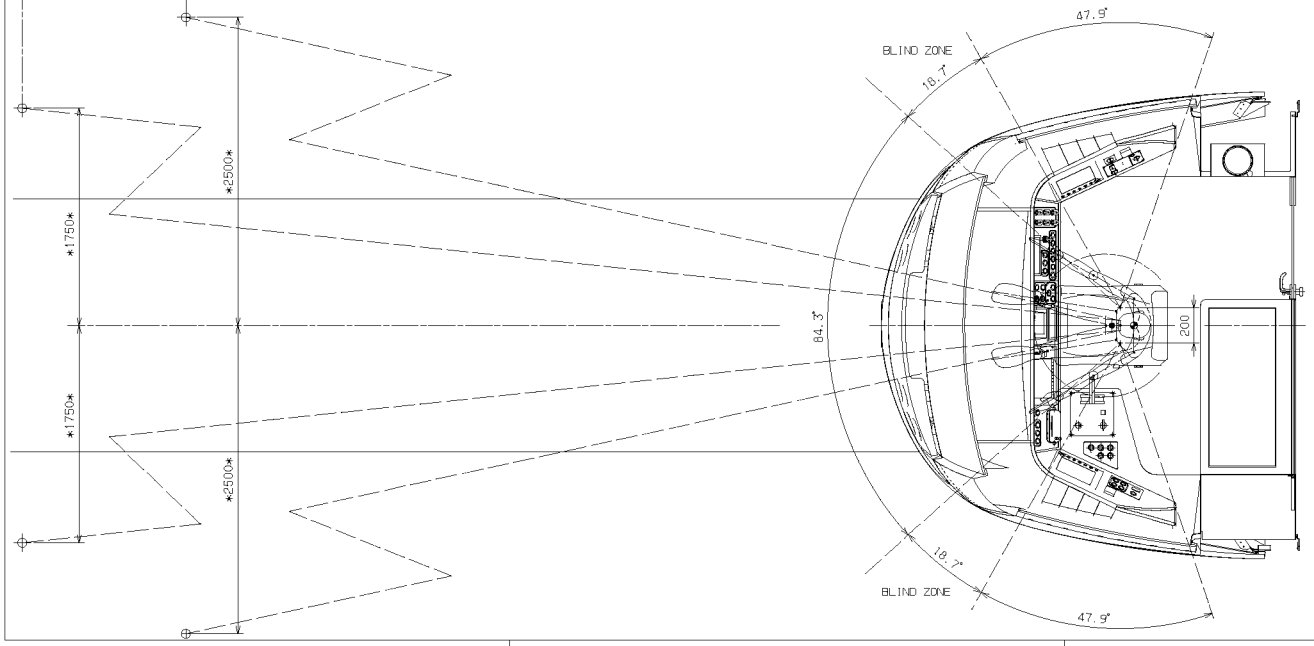

VISIBILITY ACCORDING STANDARD UIC 651

DRIVER HEIGHT: 1600 mm.

SECTION A-A AT 1222 mm FLOOR LEVEL

MODIFICACIONES				
	FECHA	NOMBRES		
	COMPR.		PLANO Nº	
	VERIFIC.			
	TECNOL.			
			SUSTITUYE A:	EDICION
	TOL. GEN.	ESCALA	DESIGNACION:	HOJA Nº 2
APLICACIONES		1/15	DRIVER VISIBILITY	Nº DE HOJAS 2
	FECHA	NOMBRES	ENTIDAD: CAF-BEASAIN	
	DIBUJ.	17-03-08	REFERENCIA: Q.22.00.812	
	VERIFIC.	17-03-08		
-EDINBURGH TRAM-	SUSTITUYE A :		Q.00.072.19 ED.-B	EDICION

23340 FRAME 1 MARCH 18, 2008 13.07.46

USB00000086_0293

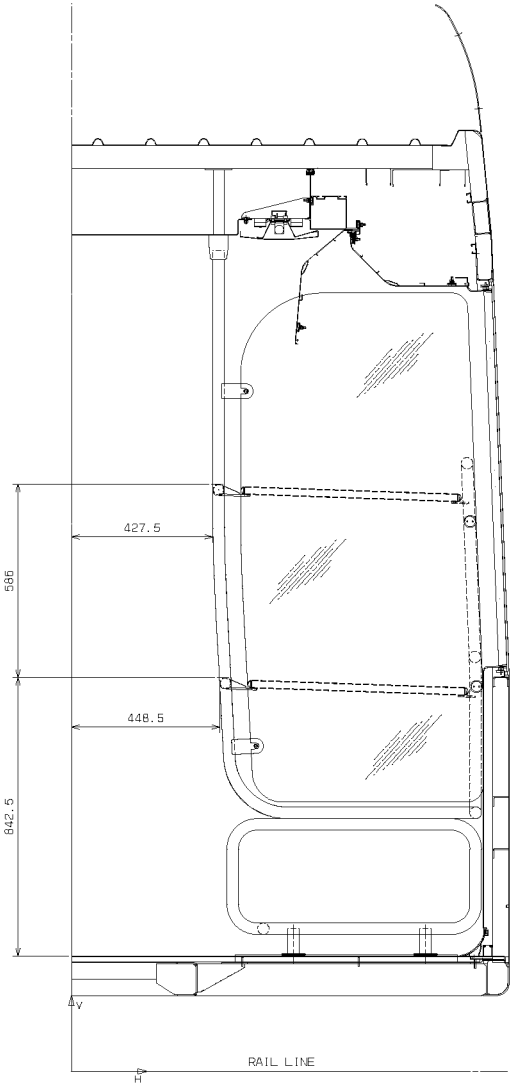

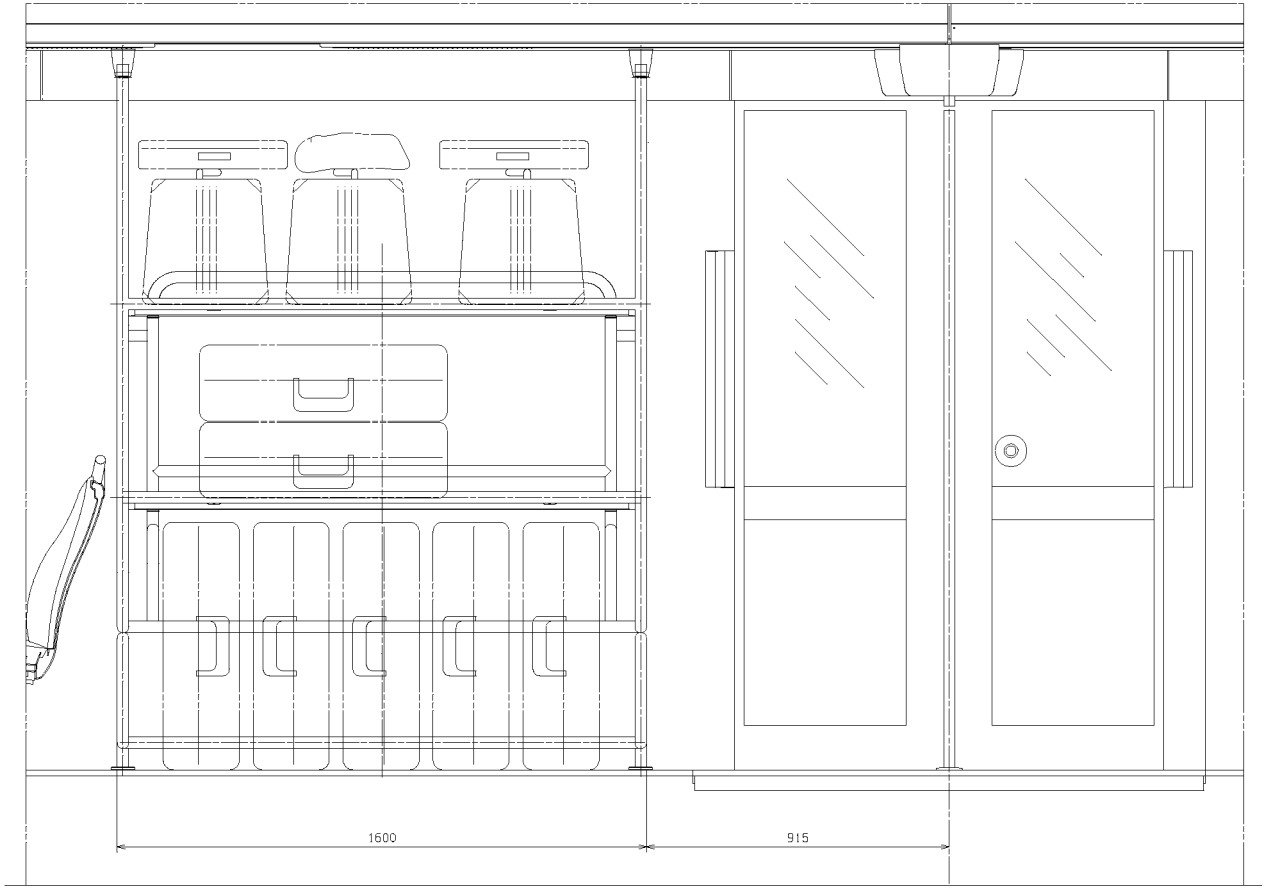

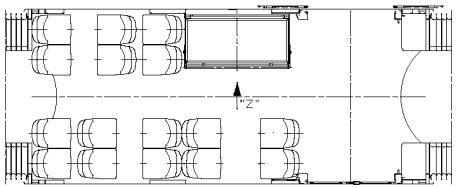

MODIFICACIONES			
	FECHA	NOMBRES	
COMPR.			PLANO Nº
VERIFIC.			
MONTAJ.			
			SUSTITUYE A:
TOL. GEN.	ESCALA		DESIGNACION:
	1/8		LUGGAGE CUPBOARD
APLICACIONES			
	FECHA	NOMBRES	ENTIDAD: CAF-BEASAIN
DIBUJ.	17-03-08		REFERENCIA: Q.22.00.813
VERIFIC.	17-03-08		
-EDINBURGH TRAM-	SUSTITUYE A :	Q.00.072.48	

EDICION | HOJA Nº 1 | Nº DE HOJAS 1 | EDICION

23389 FRAME 1 MARCH 18, 2008 12.31.50

USB00000086_0294

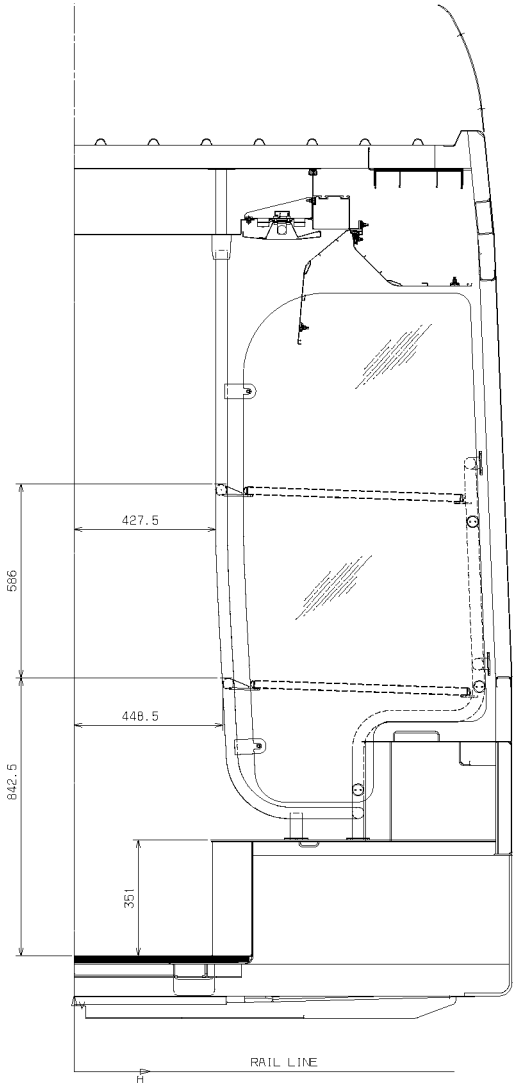

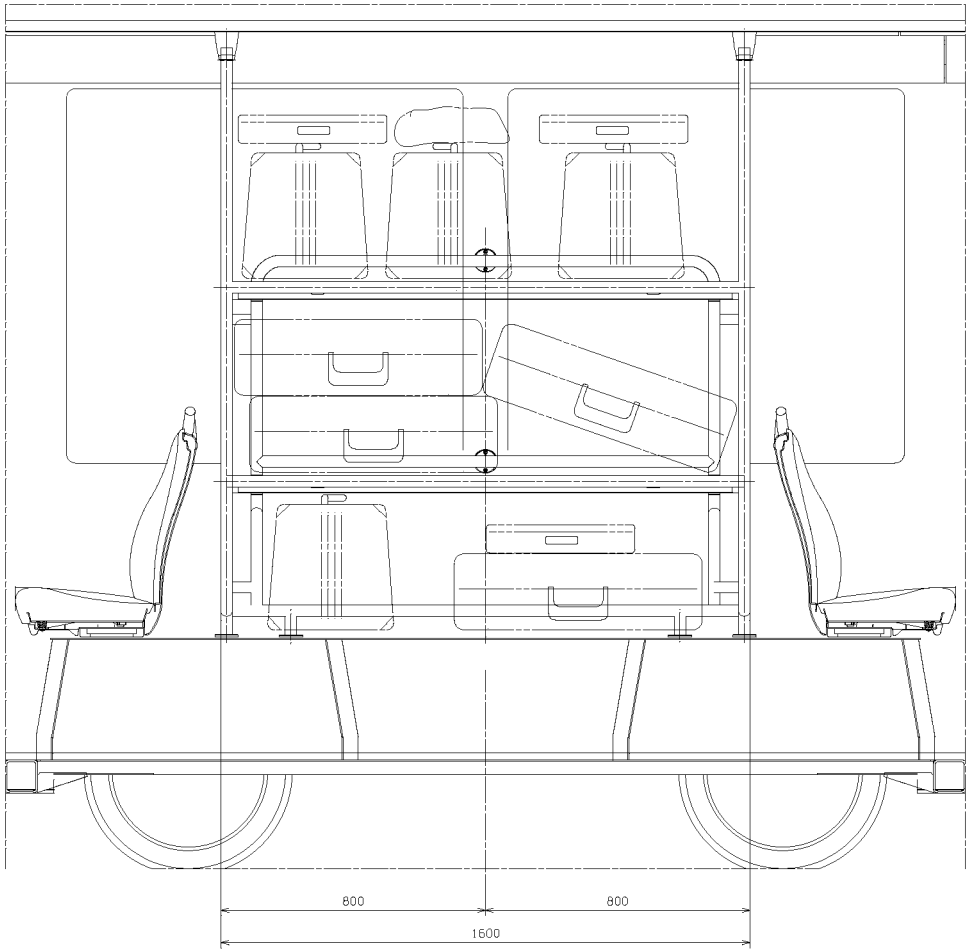

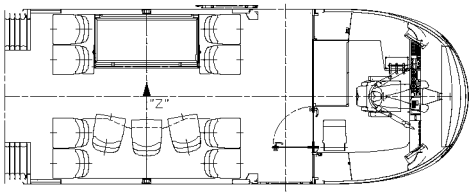

MODIFICACIONES				
	FECHA	NOMBRES		
DIBUJ.			PLANO Nº	
VERIFIC.				
MONTAJ.				
			SUSTITUYE A:	EDICION
TOL. GEN.	ESCALA		DESIGNACION:	HOJA Nº
	1/6		LUGGAGE CUPBOARD	1
APLICACIONES				Nº DE HOJAS 1
	FECHA	NOMBRES	ENTIDAD: CAF-BEASAIN	
DIBUJ.	17-03-08		REFERENCIA: Q.22.00.814	
VERIFIC.	17-03-08			
-EDINBURGH TRAM-	SUSTITUYE A :	Q.00.072.47		EDICION

23389 FRAME 1 MARCH 18, 2008 12.31.19

USB00000086_0295

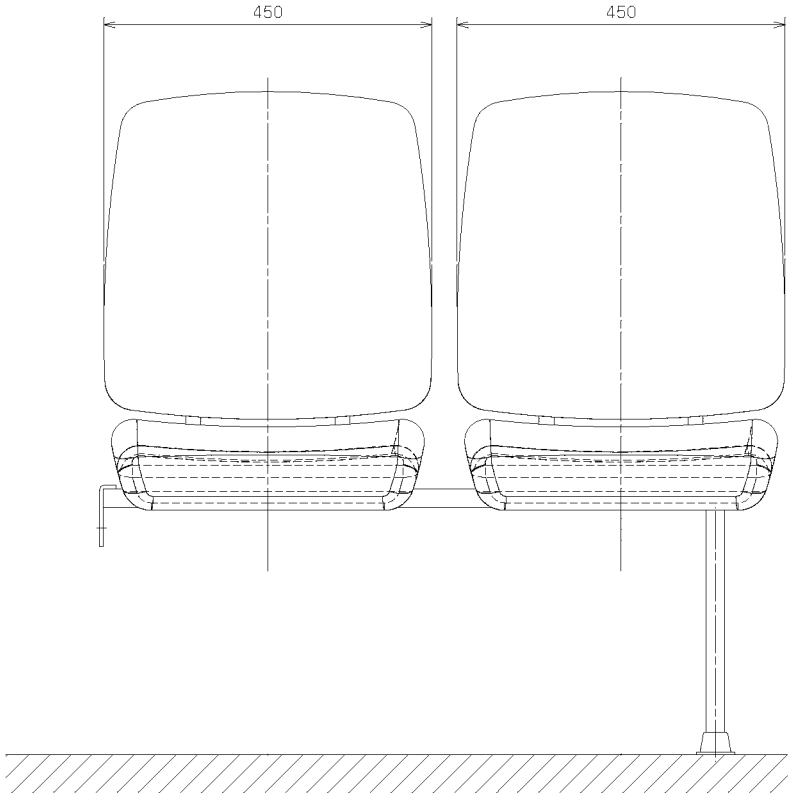

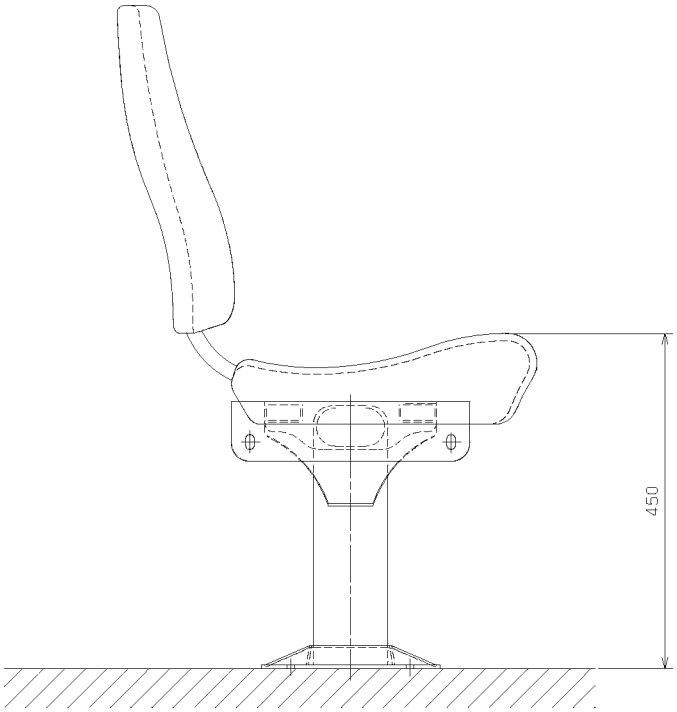

MODIFICACIONES				
		FECHA	NOMBRES	
	COMPR.			PLANO Nº
	VERIFIC.			
	HOMOL.			
	TOL. GEN.	ESCALA	SUSTITUYE A:	EDICION
			DESIGNACION:	HOJA Nº 1
		1/5	PASSENGER SEAT (OPTION 3)	Nº DE HOJAS 1
APLICACIONES		FECHA	NOMBRES	ENTIDAD: CAF-BEASAIN
	DIBUJ.	17-03-08		REFERENCIA: Q.22.00.815
	VERIFIC.	17-03-08		
-EDINBURGH TRAM-	SUSTITUYE A : Q.00.072.44			EDICION

23389 FRAME 1 MARCH 18, 2008 12.30.47

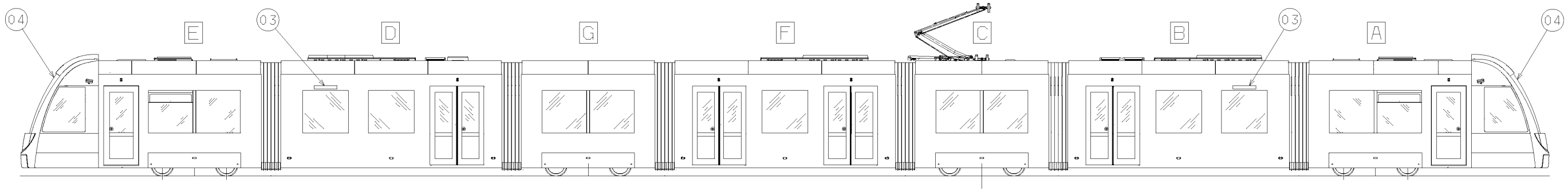

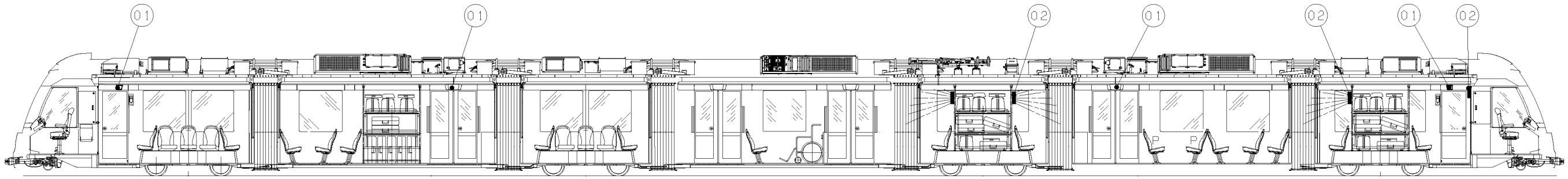

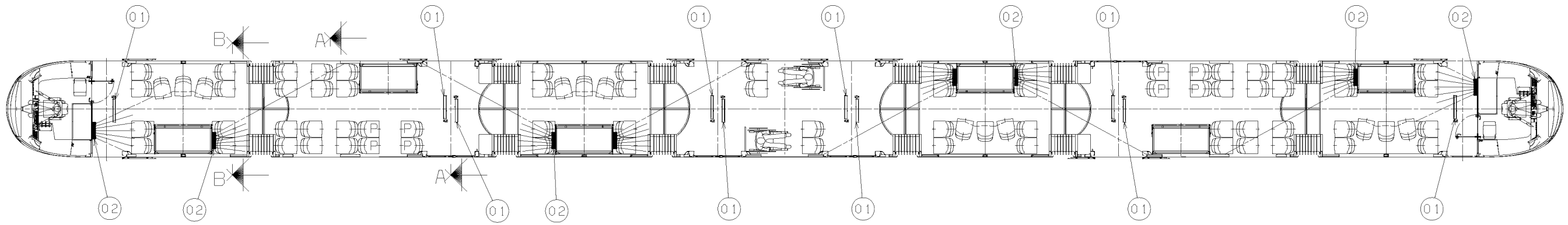

A-A
1/20

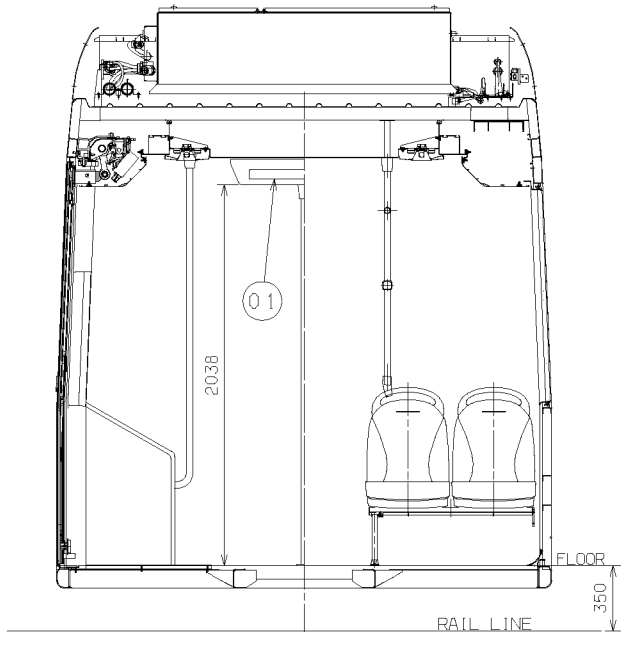

B-B
1/20

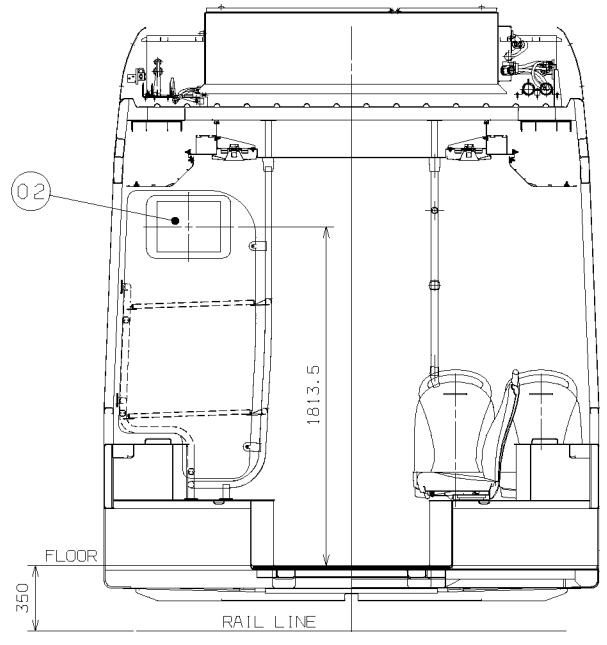

01	INTERIOR PASSENGER INFORMATION DISPLAYS
02	TFT SCREEN
03	EXTERIOR PASSENGER INFORMATION DISPLAY
04	FRONTAL PASSENGER INFORMATION DISPLAY

MODIFICACIONES				
	FECHA	NOMBRES		
COMPR.			PLANO Nº	
VERIFIC.				
NORDL.				
			SUSTITUYE A:	EDICION
TOL. GEN.	ESCALA		DESIGNACION: LAYOUT DISPLAYS	HOJA Nº 1
	1/60			Nº DE HOJAS 1
APLICACIONES				
	FECHA	NOMBRES	ENTIDAD: CAF-BEASAIN	
DIBUJ.	17-03-08		REFERENCIA: Q.22.00.816	
VERIFIC.	17-03-08			
-EDINBURGH TRAM-			SUSTITUYE A : Q.00.072.32 EDIC."D"	EDICION

USB00000086_0296

23389 FRAME 1 MARCH 18, 2008 13.38.46

USB00000086_0297

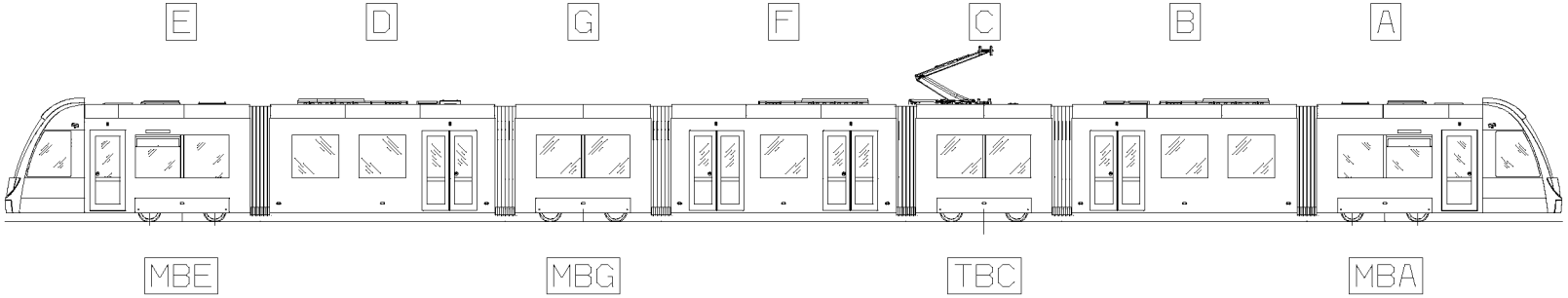

TARE	E	D	G	F	C	B	A	TOTAL
Carbody Weight	6650,7	5622,9	3992,4	4967,4	3690,2	6124,9	6843,7	37892,2
Bogie Weight	4961,0		4961,0		3071,0		4961,0	17954,0
TOTAL Tram Weight	11611,7	5622,9	8953,4	4967,4	6761,2	6124,9	11804,7	55846,2

Vehicle Weight	E	D	G	F	C	B	A	TOTAL
AW0 Tare	11611,7	5622,9	8953,4	4967,4	6761,2	6124,9	11804,7	55846,2
AW1 (full seated)	12457,7	6750,9	9728,9	5249,4	7536,7	7252,9	12650,7	61627,2
AW2 (4p/m2)	13740,8	8944,8	10665,1	8306,3	8472,9	9446,8	13933,8	73510,6
AW3 (5p/m2)	14061,6	9493,3	10899,2	9070,5	8707,0	9995,3	14254,6	76481,5
AW4 (6p/m2)	14382,4	10041,8	11133,3	9834,8	8941,1	10543,8	14575,4	79452,4
AW5 (8p/m2)	15023,9	11138,8	11601,4	11363,2	9409,2	11640,8	15216,9	85394,1

AXLE LOAD	E	D	G	F	C	B	A	TOTAL
AW0 Tare	7211,6		7124,3		6153,7		7433,6	
AW1 (full seated)	7916,565		7864,5225		6893,9225		8138,565	
AW2 (4p/m2)	9106,605		9645,3525		8674,7525		9328,605	
AW3 (5p/m2)	9404,115		10090,56		9119,96		9626,115	
AW4 (6p/m2)	9701,625		10535,7675		9565,1675		9923,625	
AW5 (8p/m2)	10296,645		11426,1825		10455,5825		10518,645	

MODIFICACIONES

APLICACIONES

	FECHA	NOMBRES	
COMPR.			PLANO Nº
VERIFIC.			
HOMOL.			
TOL. GEN.	ESCALA		SUSTITUYE A:
	1/100		DESIGNACION: WEIGHT DISTRIBUTION LAYOUT
	FECHA	NOMBRES	ENTIDAD: CAF-BEASAIN
DIBUJ.	18-03-08		REFERENCIA: Q.22.00.817
VERIFIC.	18-03-08		

EDICION

HOJA Nº 1

Nº DE HOJAS 1

-EDINBURGH TRAM-

SUSTITUYE A : Q.00.072.27 EDIC."A"

EDICION

23389 FRAME 1 MARCH 18, 2008 12.28.09

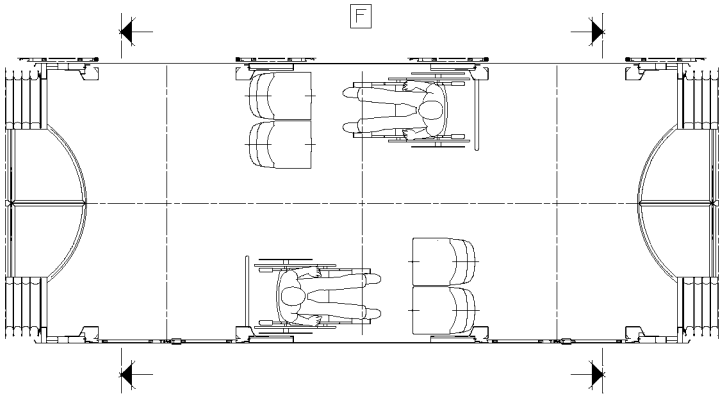

CLOSE DOORS

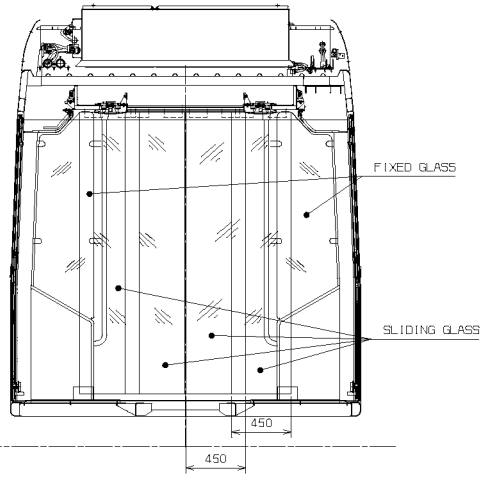

OPEN DOORS

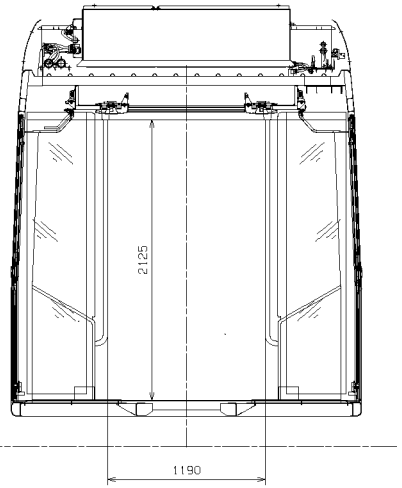

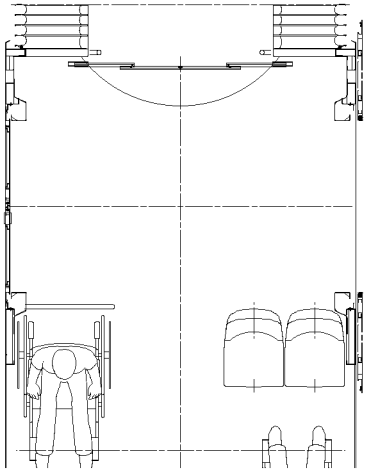

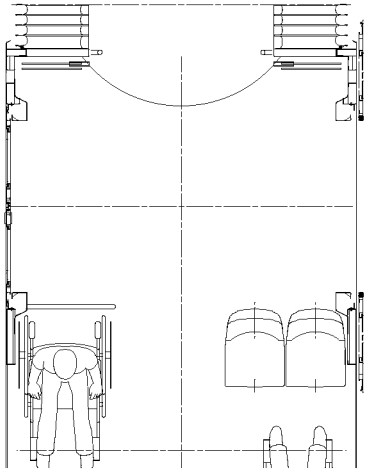

MARCA	DESCRIPCION	CANT.	Nº SUMINISTRADOR O NORMA FABRICANTE	PESO UNITARIO
			Nº DIBUJO O CALIDAD MATERIAL	NOTAS Y OBSERVACIONES

MODIFICACIONES

	FECHA	NOMBRES	
COMPR.			PLANO Nº
VERIFIC.			
NORMAL.			

SUSTITUYE A:

EDICION

TOL. GEN.	ESCALA	DESIGNACION:
NF F 00-037	1/20	NIGHT PARTITION

HOJA Nº 1

Nº DE HOJAS 1

APLICACIONES

	FECHA	NOMBRES	ENTIDAD: CAF-ZARAGOZA
DIBUJ.	18-03-08		REFERENCIA: Q.22.00.818
VERIFIC.	18-03-08		

-EDINBURGH TRAM-

SUSTITUYE A :

EDICION

USB00000086_0298

23389 FRAME 1 MARCH 18, 2008 13.24.51

USB00000086_0299

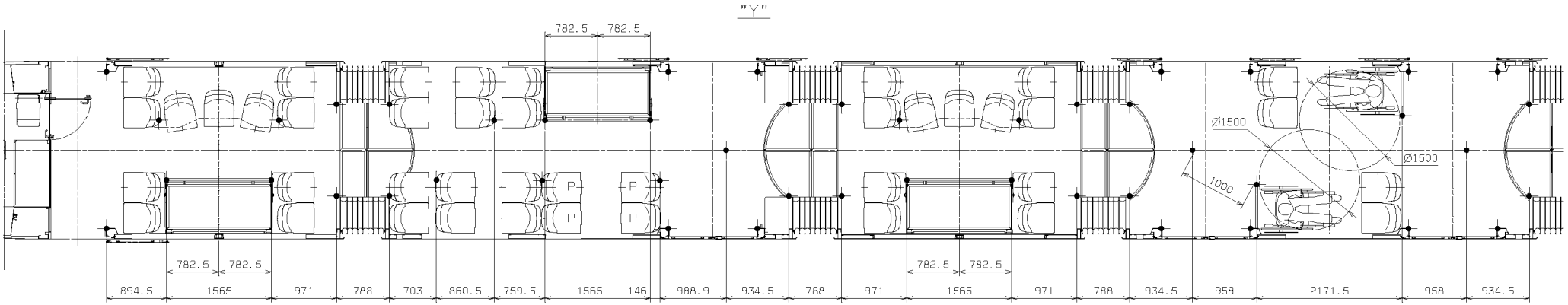

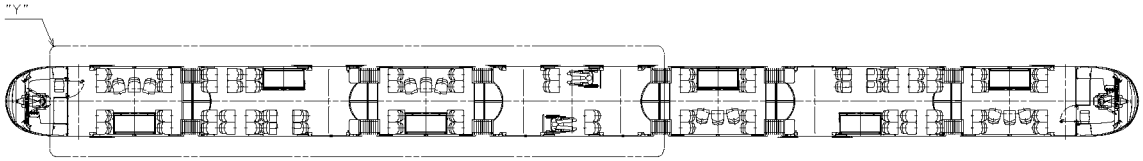

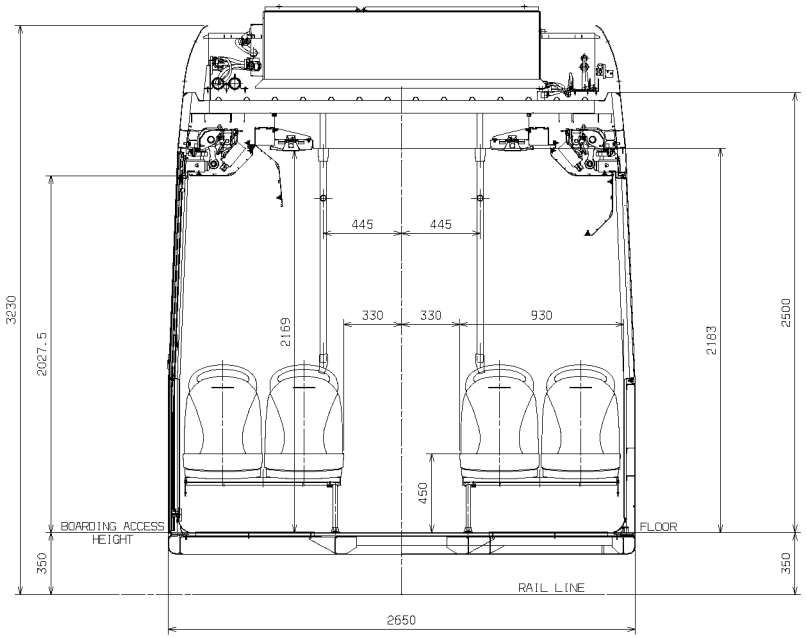

● HANDHOLDS

MARCA	DESCRIPCION	CANT.	Nº SUMINISTRADOR O NORMA FABRICANTE / Nº DIBUJO O CALIDAD MATERIAL	PESO UNITARIO / NOTAS Y OBSERVACIONES

MODIFICACIONES
A 17.03.08-Actualizar

	FECHA	NOMBRES
COMPR.		
VERIFIC.		
NORMAL.		

PLANO Nº

SUSTITUYE A:

DESIGNACION:

TOL. GEN.	ESCALA
NF F 00-037	1/30

HANDHOLDS

APLICACIONES

	FECHA	NOMBRES
DIBUJ.	18.01.08	
VERIFIC.	18.01.08	

ENTIDAD: CAF-ZARAGOZA

REFERENCIA: Q. 22. 00. 855

-EDINBURGH TRAM-

SUSTITUYE A :

EDICION

HOJA Nº 1

Nº DE HOJAS 1

A

EDICION

23389 FRAME 1 MARCH 18, 2008 13.28.29

USB00000086_0300

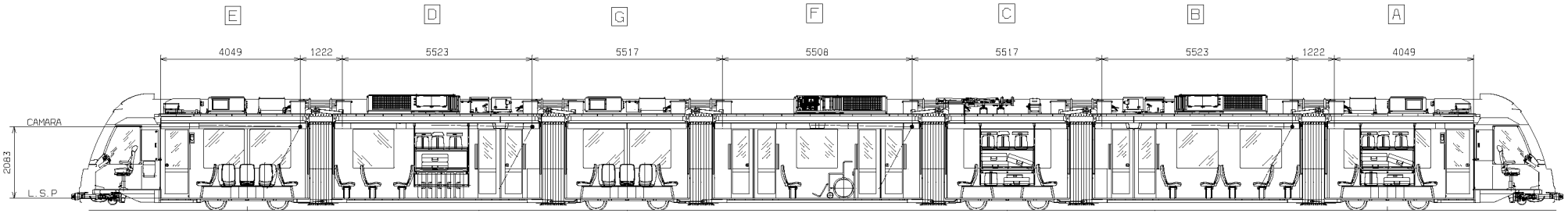

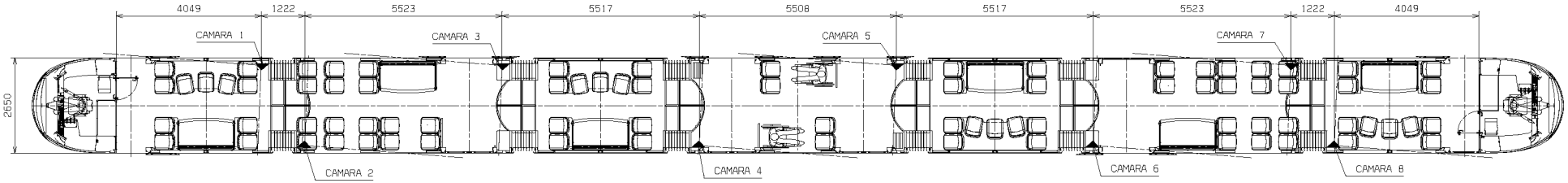

MARCA	DESCRIPCION	CANT.	Nº SUMINISTRADOR O NORMA FABRICANTE / Nº DIBUJO O CALIDAD MATERIAL	PESO UNITARIO / NOTAS Y OBSERVACIONES

MODIFICACIONES

	FECHA	NOMBRES	
COMPR.			PLANO Nº
VERIFIC.			
NORMAL			

SUSTITUYE A:

EDICION

DESIGNACION:

DISPOSICION CAMARAS CCTV

TOL. GEN.	ESCALA	HOJA Nº
Nº F 00-037	1/60	1

Nº DE HOJAS 1

APLICACIONES

	FECHA	NOMBRES
DIBUJ.	22.01.08	
VERIFIC.	22.01.08	

ENTIDAD: CAF-ZARAGOZA

REFERENCIA: Q.22.00.856

-EDINBURGH TRAM-

SUSTITUYE A :

EDICION

25091 FRAME 1 FEBRUARY 1, 2008 09.38.48

USB00000086_0301

UNIT LAYOUT

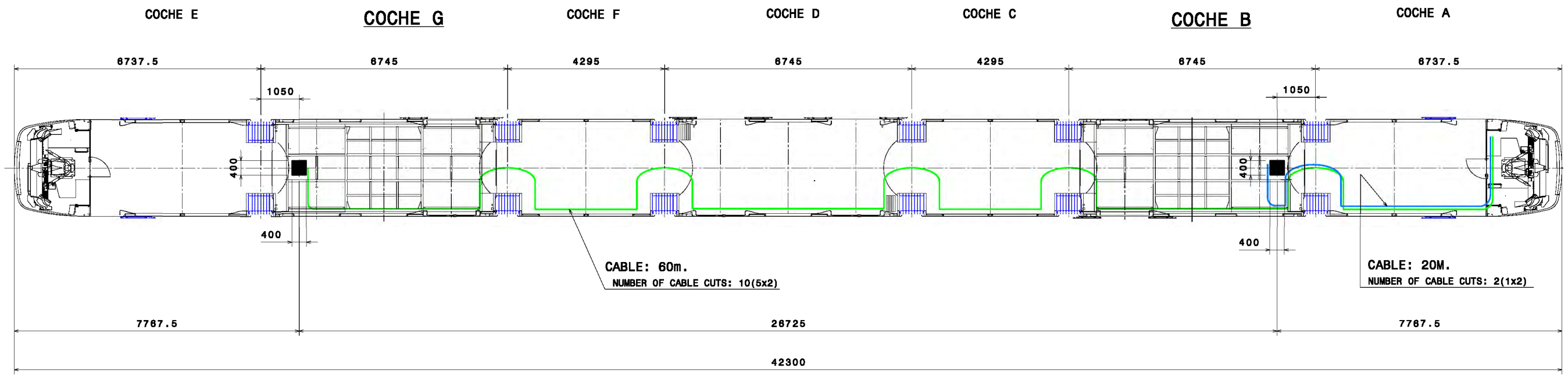

TRANSVERSE SECTION

SCALE 1:10

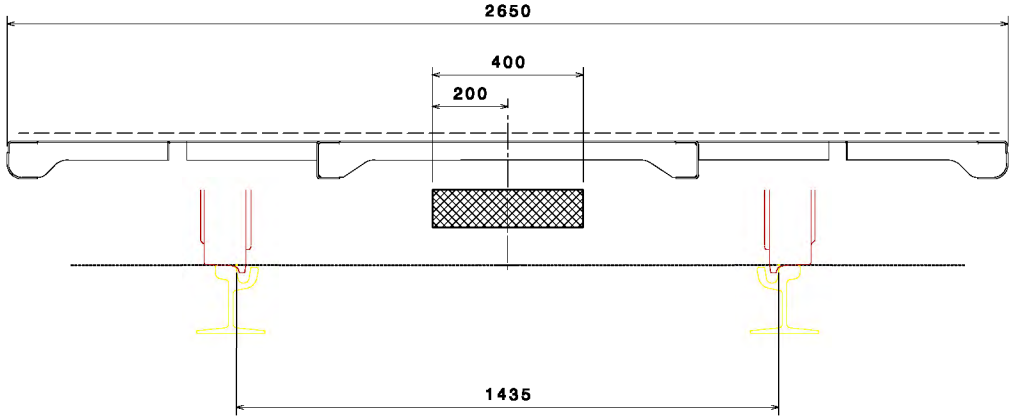

NOTE:
TRANSPONDER DIMENSIONS &
INSTALLATION CONDITIONS
TO BE CONFIRMED BY SUPPLIER

TRANSVERSAL DISPLACEMENT OF TPDS TRANSPONDER, FROM RAIL CENTER LINE

- R= 25m. CURVE _____ 121,85mm.
- R= 2000m. CURVE _____ 87,42mm.

Este documento es propiedad de CAF, S.A.
La reproducion, transmision o uso por terceras personas de este documento, o de su contenido, no esta permitido sin expresa autorizacion escrita.

MARCA	DESCRIPCION	CANT.	CODIFICACION O NORMA	MATERIAL O REFERENCIA	PESO UNITARIO	(mm) DIMENSIONES
			Nº DIBUJO O CALIDAD MATERIAL:		NOTAS Y OBSERVACIONES	

MODIFICACIONES

	FECHA	NOMBRES	
COMPR.			PLANO Nº
VERIFIC			
HOMOL.			

SUSTITUYE A:

EDICION

TBL.SEN | ESCALA: 1:80

DESIGNACION: TPDS TRANSPONDER OPTION FOR ASSEMBLY

HOJA Nº 1 | Nº DE HOJAS 1

	FECHA	NOMBRES
DIBUJ.	4-12-07	CUADRADO
VERIFIC.	4-12-07	I.ANUELO

ENTIDAD: CAF

REFERENCIA: Q.22.72.999

A1

EDINBURGH TRAM

SUSTITUYE A :

EDICION

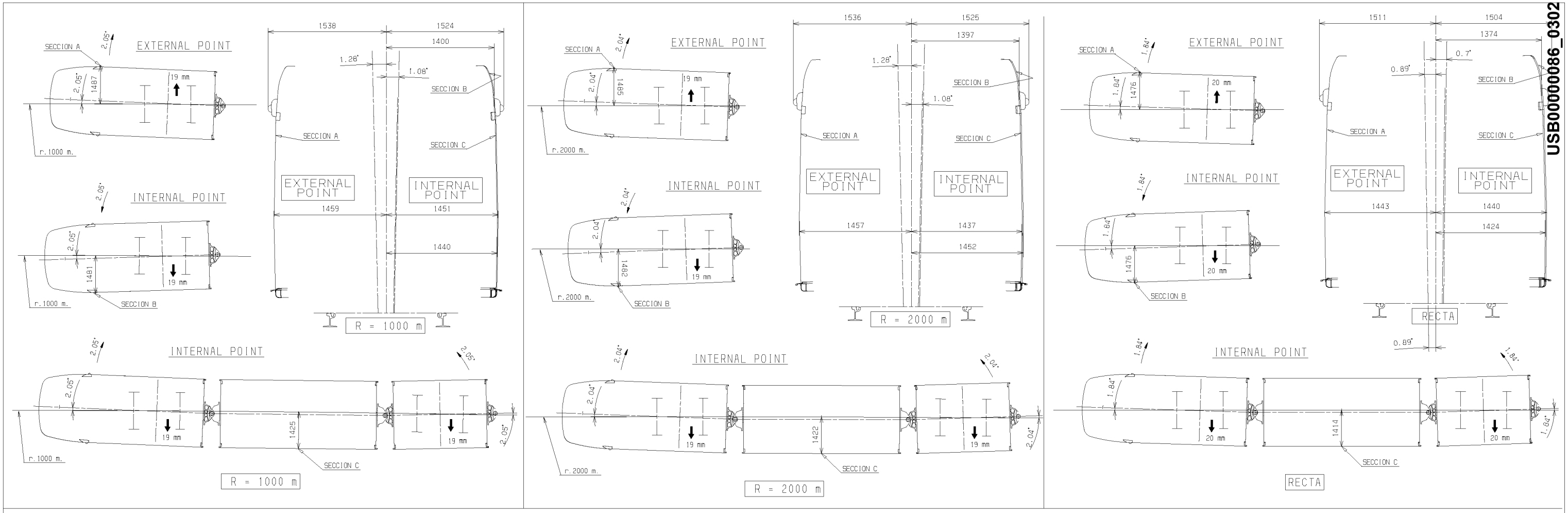

USB00000086_0302

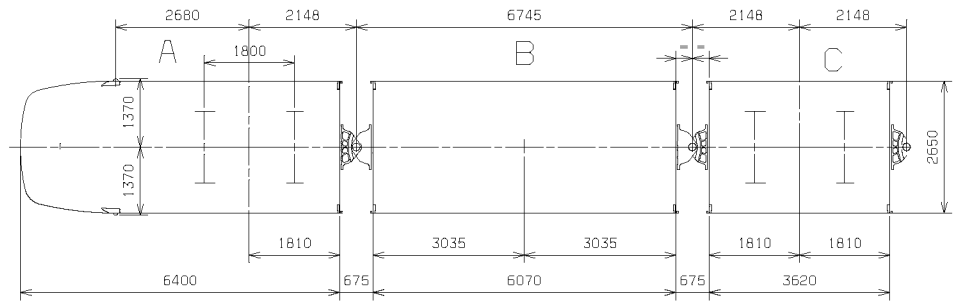

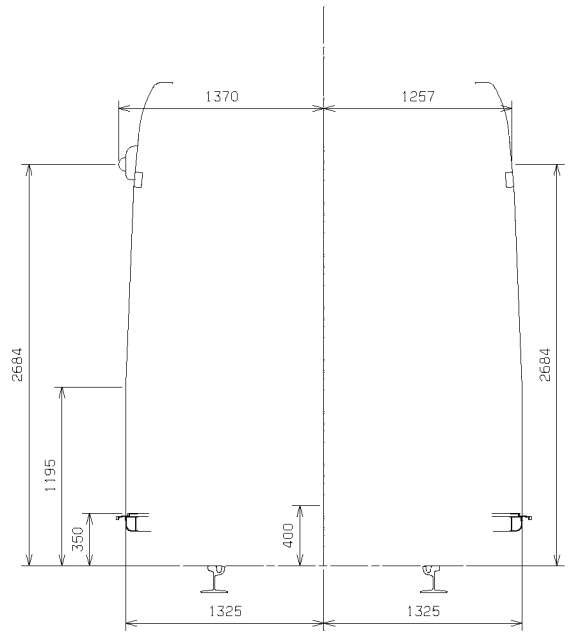

NOTE.-FULL ACCUMMULATION OF RAIL WEAR
AND TOLERANCES CONSIDERED.
PLEASE REFER TO Q.22.93.105 FOR ACCURATE VALUES
OF DKE CONSIDERING STATISCAL DISTRIBUTION
OF RAIL WEAR/TOLERANCES

THIS DRAWING CONSIST ON THREE SHEETS

DATA Transverse Displacements:

- $\frac{l-d}{2}$ = 28.5 mm
  - Max. flage wear: 2 mm
  - Wheel-rail clearance: 3.5 mm
  - Gauge (+10mm-Rail wear) 5 mm
  - Horiz. alignm.(+15mm-Rail wear): 10 mm
  - Rail wear : 5 mm
- q = 3.4 mm
  - Axlebox: 0.4 mm
  - Primary suspension: 3 mm
- Secundary suspension displacement: 20 mm

- Bogie spin due to traction rod clearances: (max)0.8°
- Bogie spin due to $\frac{l-d}{2}$ + q: 1.84°
- Hc: 400 mm.
- Souplesse: 0.1
- Exterior
  - *Cant deficiency(100mm) w/s= 0.38°
  - *Asymmetrical loading: 0.45°
  - *Dinamyc oscillations: 0.44°
  - *Vertical alignement: 0.25°

- Interior(Dynamic effects not considered)
  - *Cant deficiency(100mm) w/s= 0.38°
  - *Asymmetrical loading: 0.45°
  - *Vertical alignement: 0.25°

MARCA	DESCRIPCION	CANT.	Nº SUMINISTRADOR O NORMA FABRICANTE	PESO UNITARIO
			Nº DIBUJO O CALIDAD MATERIAL	NOTAS Y OBSERVACIONES

MODIFICACIONES

APLICACIONES

-EDINBURGH TRAM-

	FECHA	NOMBRES
COMPR.		
VERIFIC.		
HOMOL.		
TOL. GEN.	ESCALA	
DIBUJ.	06.02.08	
VERIFIC.	06.02.08	J.Piquaras

PLANO Nº

SUSTITUYE A:

DESIGNACION: GAUGE

ENTIDAD: CAF-ZARAGOZA

REFERENCIA: Q. 22.93.101

SUSTITUYE A :

EDICION

HOJA Nº 1

Nº DE HOJAS 3

EDICION

23337 FRAME 1 MARCH 17, 2008 13.38.51

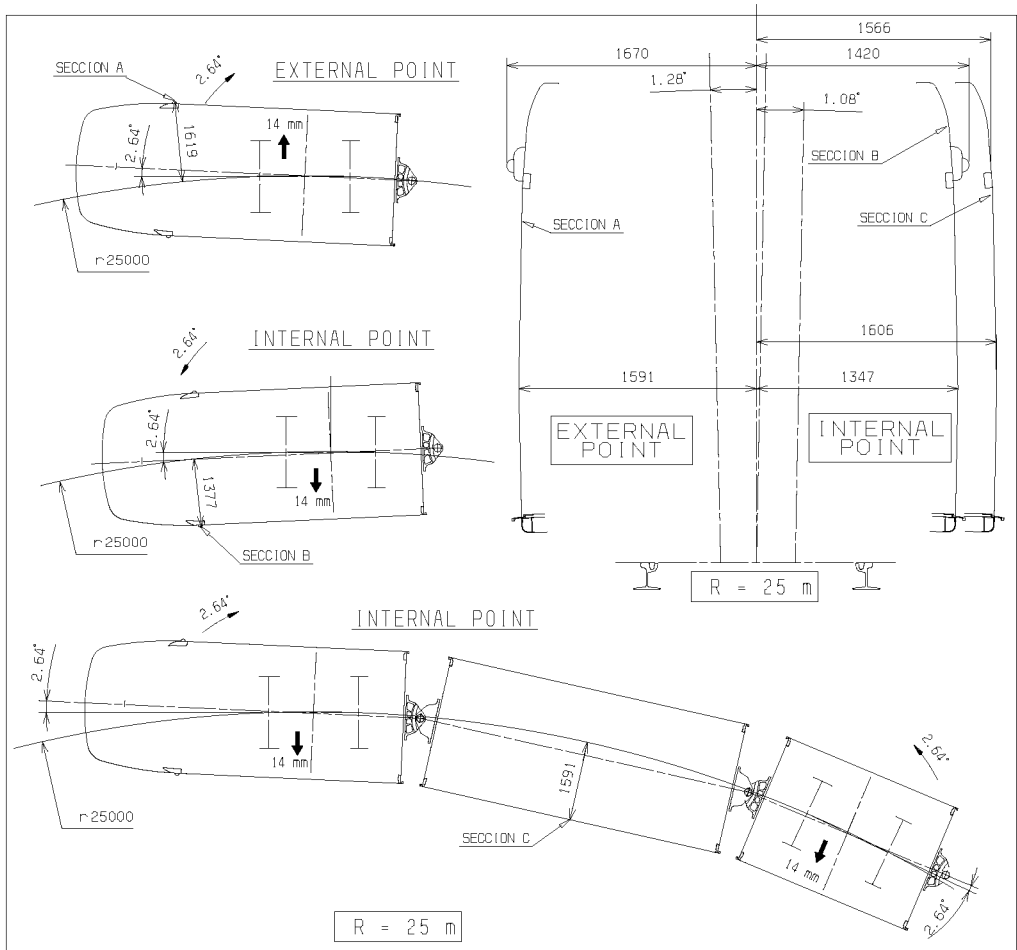

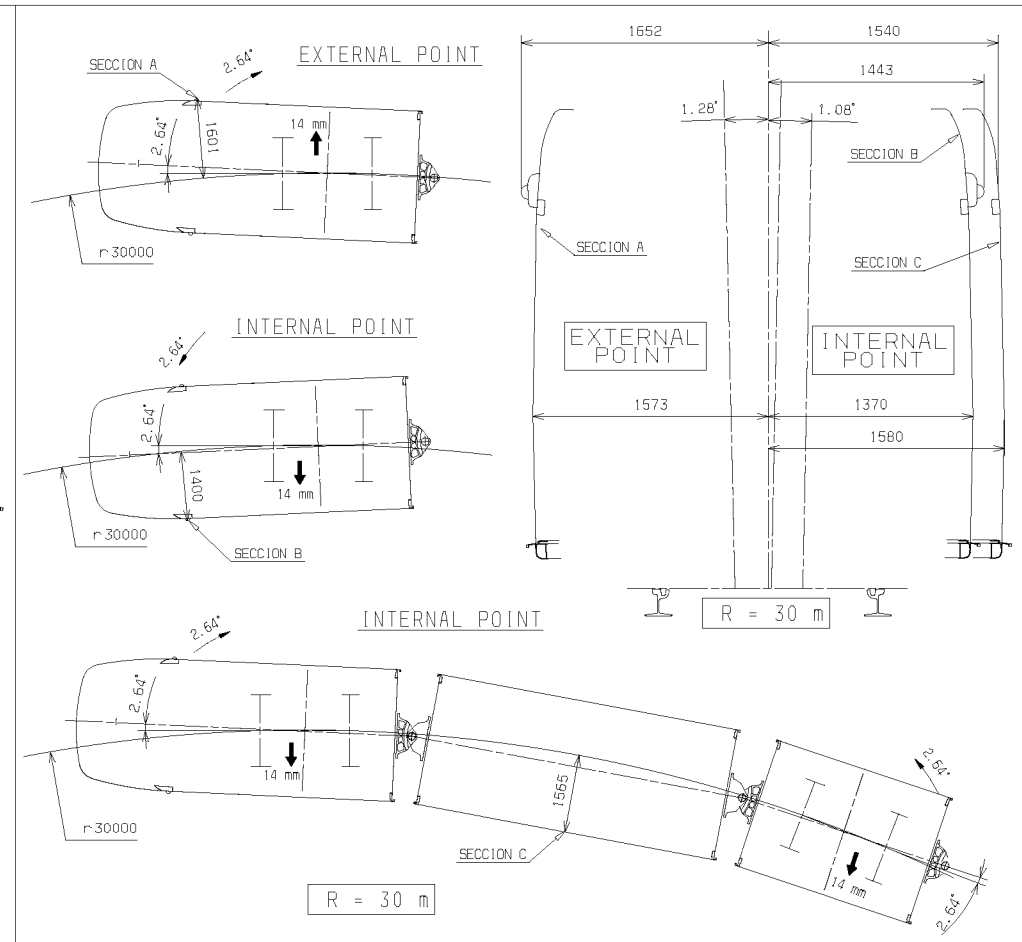

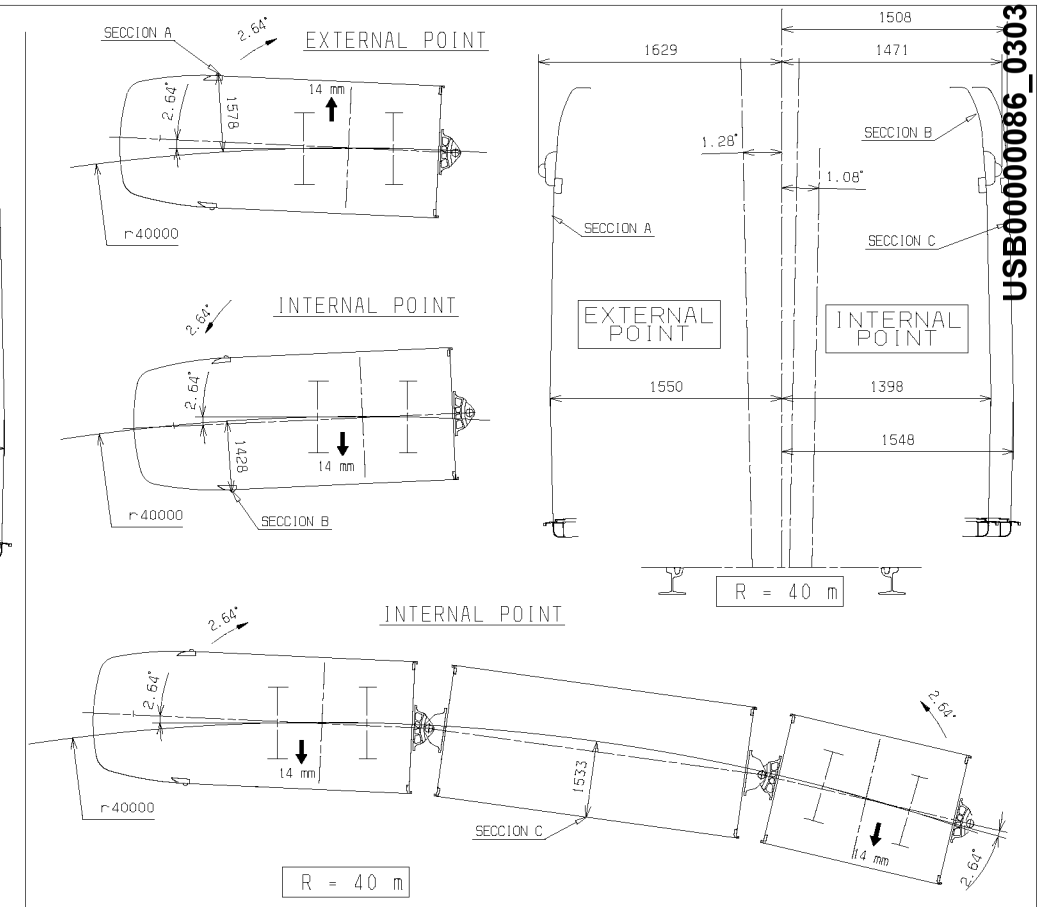

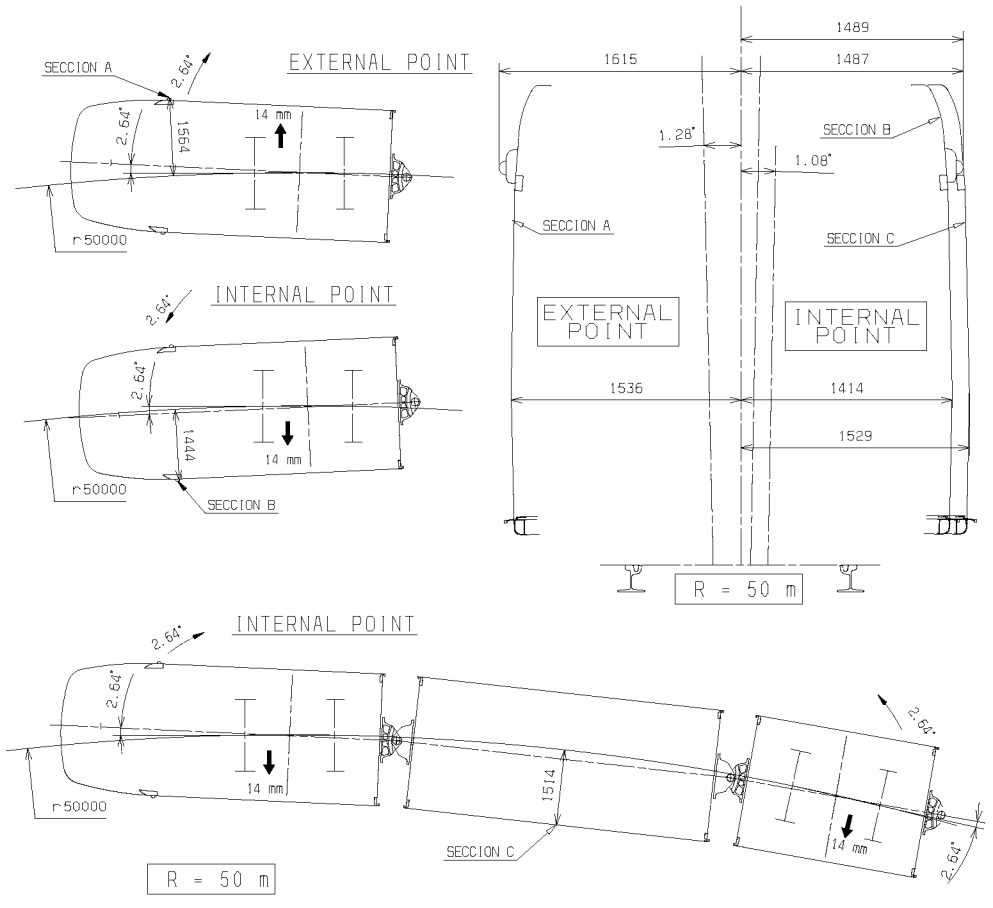

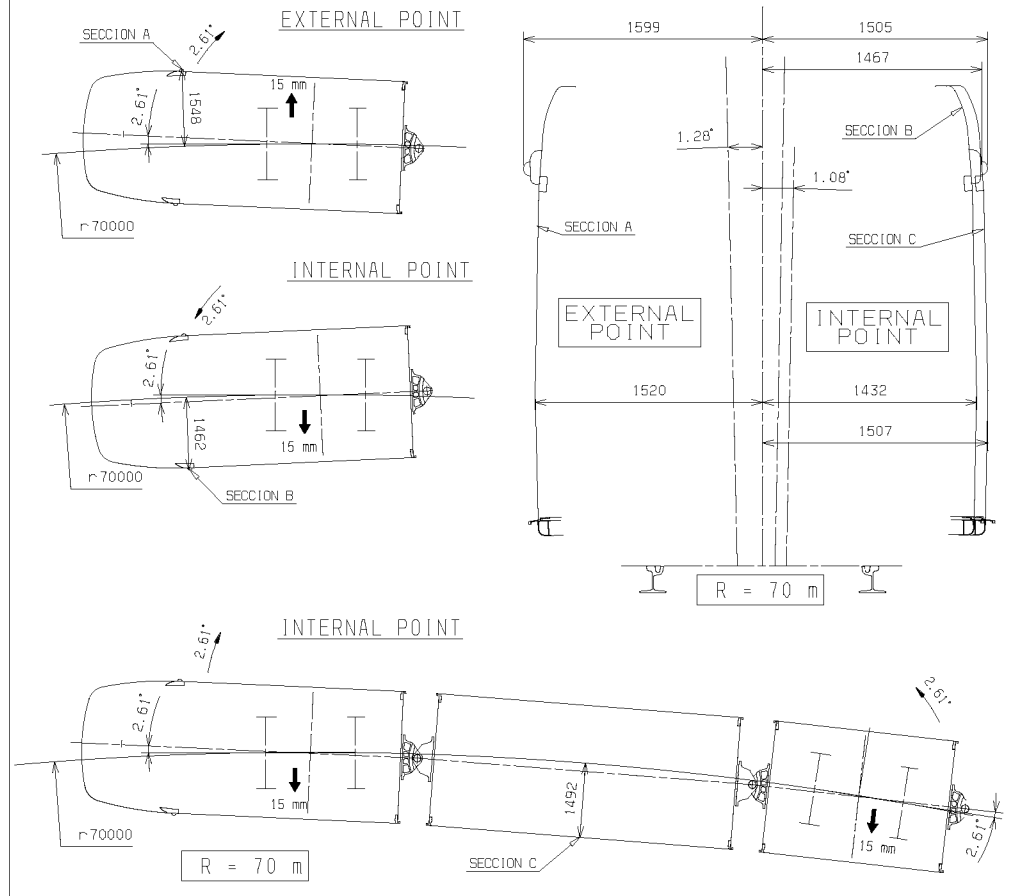

NOTE.-FULL ACCUMMULATION OF RAIL WEAR
AND TOLERANCES CONSIDERED.
PLEASE REFER TO Q.22.93.105 FOR ACCURATE VALUES
OF DKE CONSIDERING STATISCAL DISTRIBUTION
OF RAIL WEAR/TOLERANCES

THIS DRAWING CONSIST ON THREE SHEETS

MARCA	DESCRIPCION	CANT.	Nº SUMINISTRADOR O NORMA FABRICANTE / Nº DIBUJO O CALIDAD MATERIAL	PESO UNITARIO / NOTAS Y OBSERVACIONES

MODIFICACIONES

APLICACIONES

-EDINBURGH TRAM-

	FECHA	NOMBRES	
COMPR.			PLANO Nº
VERIFIC.			
HORIZL.			
TOL. GEN.	ESCALA		SUSTITUYE A: / EDICION
	1/75 1/25		DESIGNACION: GAUGE / HOJA Nº 2 / Nº DE HOJAS 3
	FECHA	NOMBRES	ENTIDAD: CAF-ZARAGOZA
DIBUJ.	06.02.08		REFERENCIA: Q.22.93.101
VERIFIC.	06.02.08	J.Piquenas	
SUSTITUYE A :			EDICION

USB00000086_0303

23337 FRAME 1 MARCH 17, 2008 13.44.47

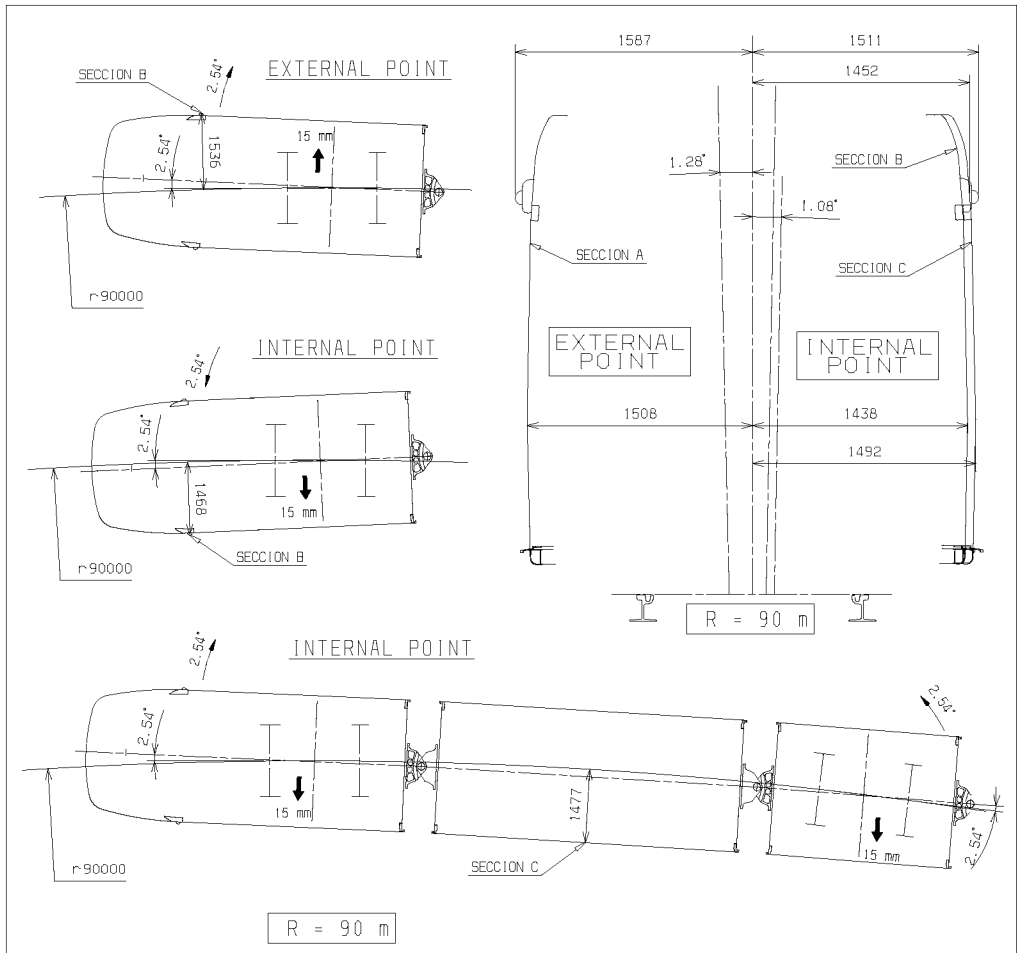

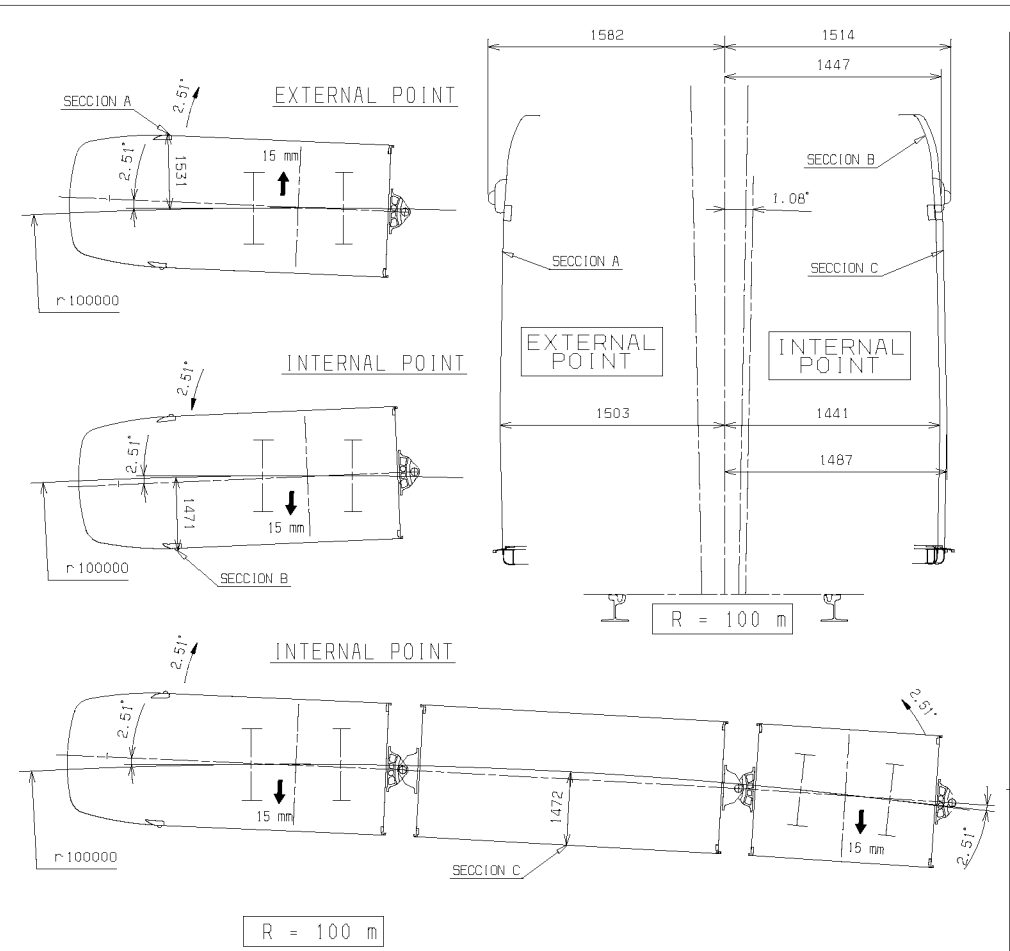

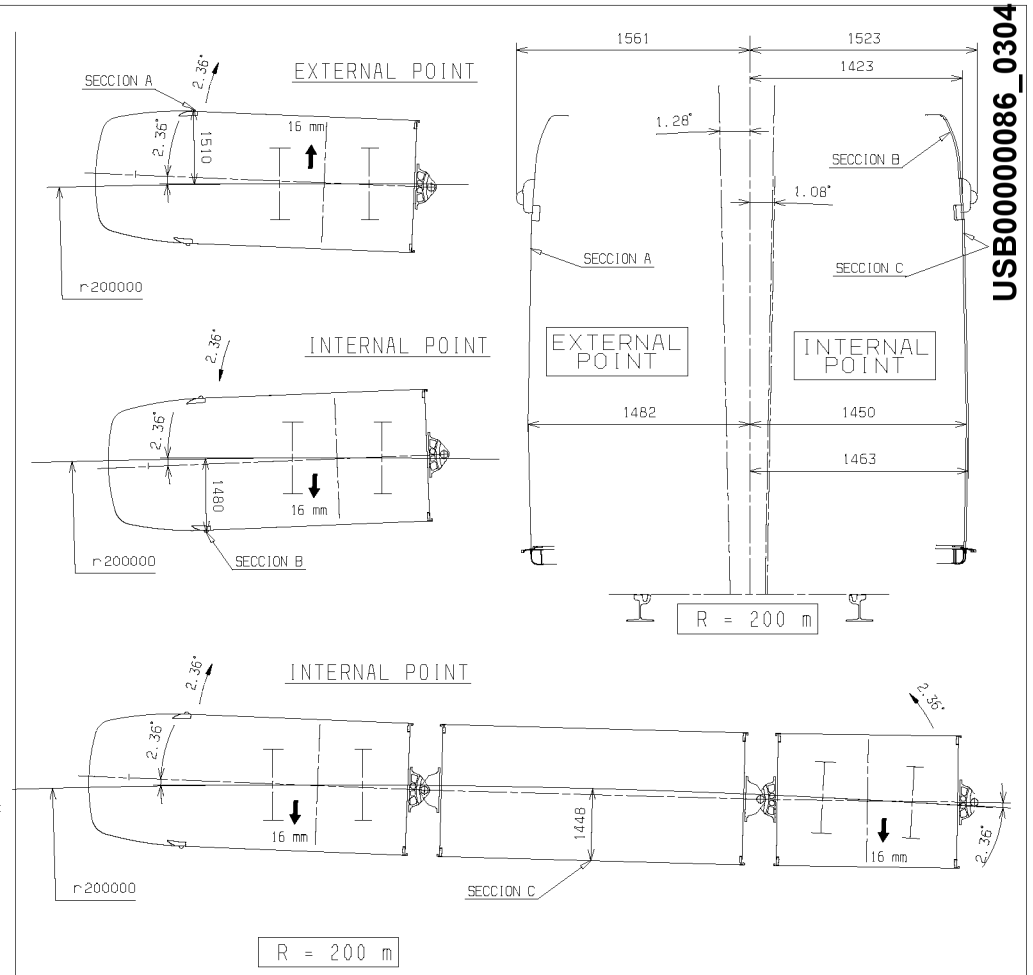

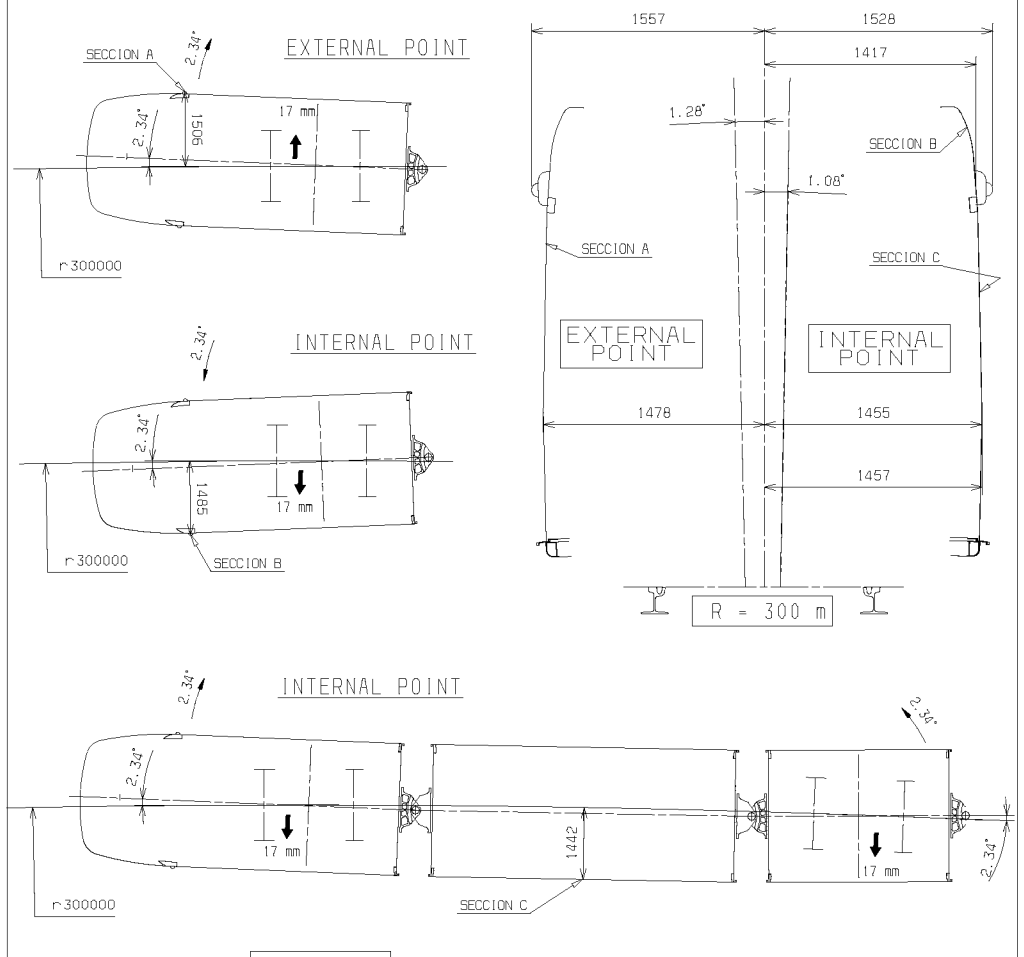

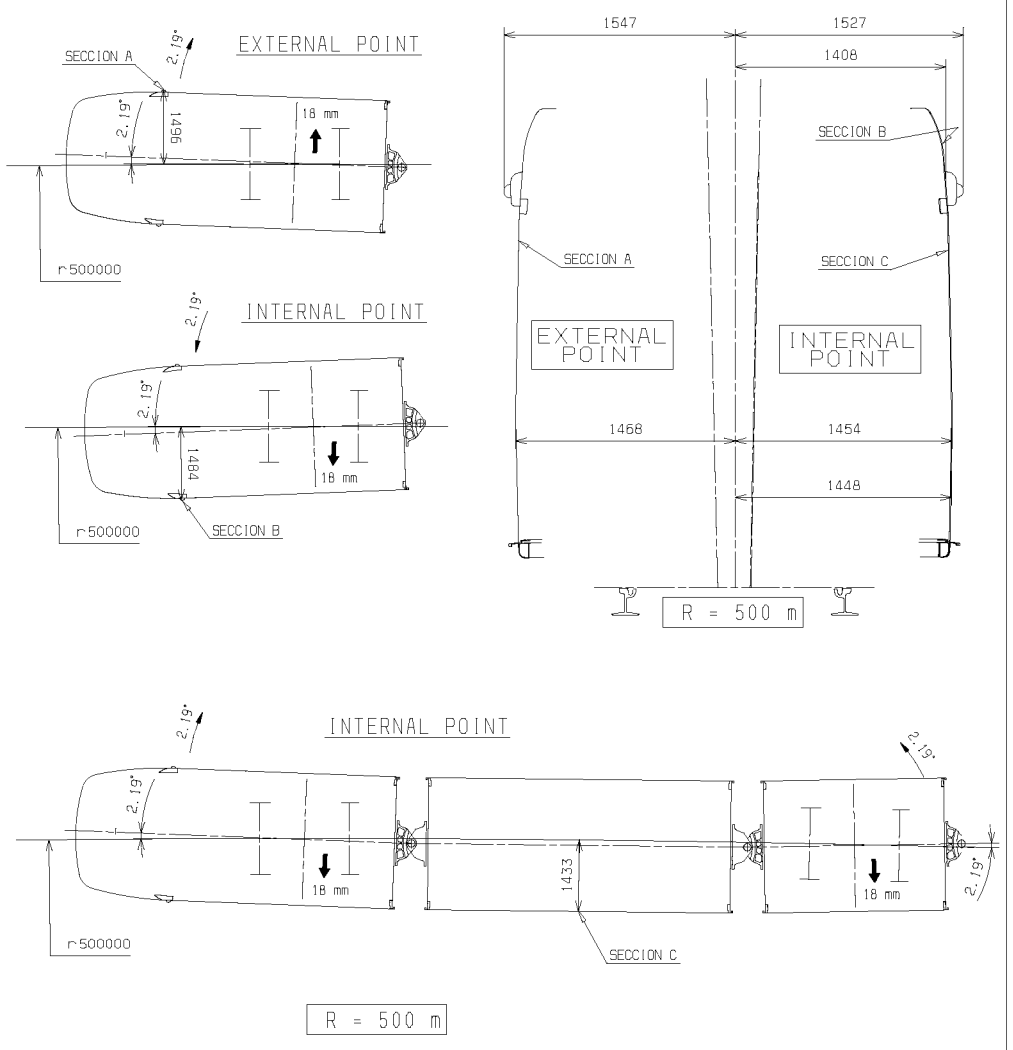

NOTE.-FULL ACCUMMULATION OF RAIL WEAR
AND TOLERANCES CONSIDERED.
PLEASE REFER TO Q.22.93.105 FOR ACCURATE VALUES
OF DKE CONSIDERING STATISCAL DISTRIBUTION
OF RAIL WEAR/TOLERANCES

THIS DRAWING CONSIST ON THREE SHEETS

MARCA	DESCRIPCION	CANT.	Nº SUMINISTRADOR O NORMA FABRICANTE		PESO UNITARIO
			Nº DIBUJO O CALIDAD MATERIAL		NOTAS Y OBSERVACIONES

MODIFICACIONES

APLICACIONES

	FECHA	NOMBRES
COMPR.		
VERIFIC.		
MONTAJ.		

PLANO Nº

SUSTITUYE A: EDICION

TOL. GEN. ESCALA

DESIGNACION: GAUGE

HOJA Nº 3

Nº DE HOJAS 3

	FECHA	NOMBRES
DIBUJ.	06.02.08	
VERIFIC.	06.02.08	J.Piqueras

ENTIDAD: CAF-ZARAGOZA

REFERENCIA: Q. 22.93.101

-EDINBURGH TRAM-

SUSTITUYE A : EDICION

USB00000086_0304

23337 FRAME 1 MARCH 17, 2008 13.41.55

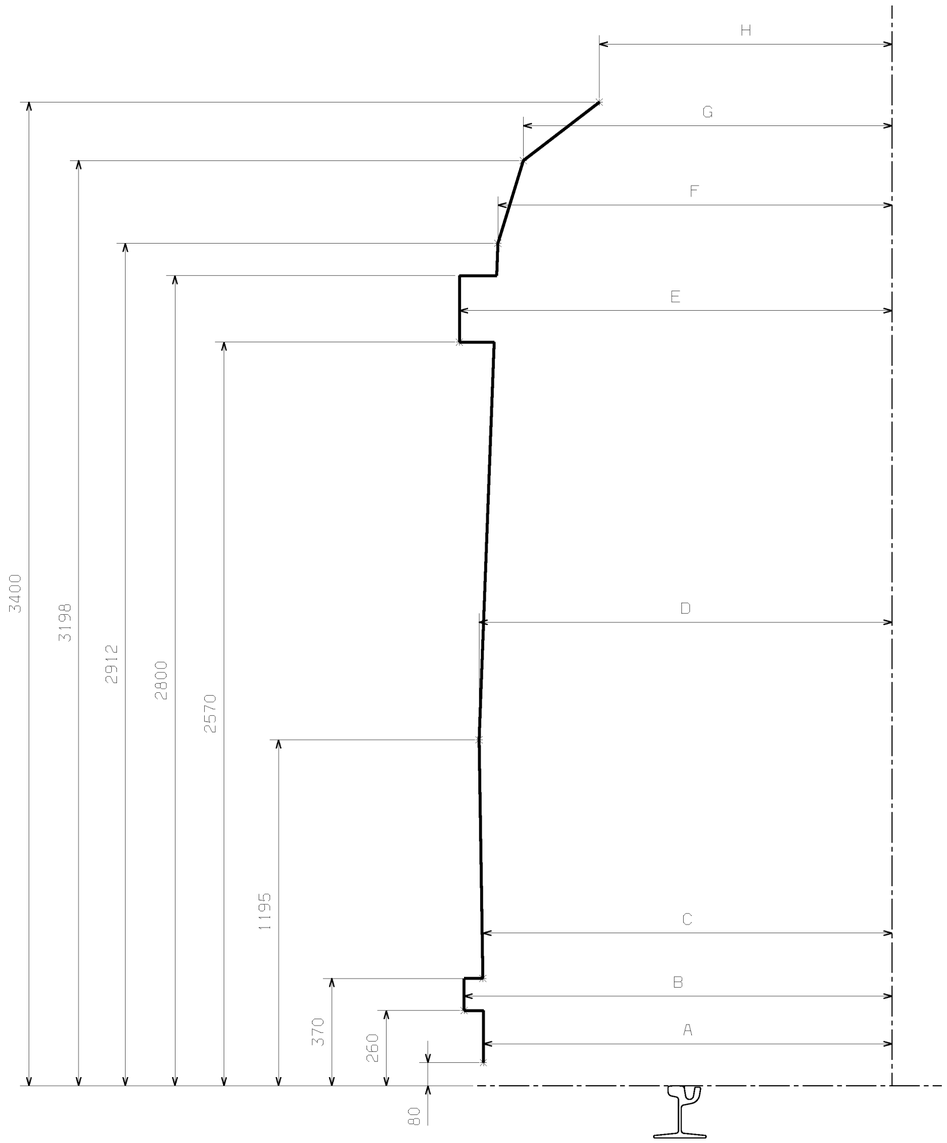

DEVELOPED KINEMATIC ENVELOPE INSIDE CURVE													
Point \ Radius	25	30	40	50	70	90	100	200	300	500	1000	2000	STRAIGHT
A	1575	1550	1518	1499	1476	1462	1457	1433	1427	1420	1418	1419	1414
B	1642	1617	1585	1566	1543	1529	1524	1501	1494	1487	1485	1486	1480
C	1577	1552	1520	1501	1478	1464	1459	1436	1429	1422	1420	1421	1415
D	1593	1567	1536	1517	1494	1480	1475	1451	1444	1438	1435	1437	1425
E	1553	1528	1496	1477	1489	1496	1498	1508	1513	1511	1509	1510	1488
F	1534	1509	1477	1458	1435	1421	1416	1393	1386	1379	1377	1378	1355
G	1447	1421	1389	1370	1348	1334	1329	1305	1298	1292	1289	1291	1266
H	1184	1159	1127	1108	1086	1072	1066	1043	1036	1030	1027	1028	1002

DEVELOPED KINEMATIC ENVELOPE OUTSIDE CURVE													
Point \ Radius	25	30	40	50	70	90	100	200	300	500	1000	2000	STRAIGHT
A	1571	1550	1524	1508	1488	1475	1471	1449	1443	1432	1424	1422	1413
B	1639	1617	1591	1575	1556	1543	1538	1516	1510	1500	1491	1489	1480
C	1574	1552	1526	1510	1491	1478	1473	1451	1445	1435	1426	1424	1415
D	1592	1571	1544	1529	1509	1496	1492	1470	1464	1453	1445	1443	1428
E	1670	1649	1623	1607	1587	1575	1570	1548	1542	1532	1523	1521	1496
F	1539	1518	1492	1476	1457	1444	1439	1417	1411	1401	1392	1390	1363
G	1453	1432	1405	1389	1370	1357	1352	1330	1324	1314	1305	1303	1275
H	1191	1170	1144	1128	1108	1096	1091	1069	1063	1053	1044	1042	1012

MARCA	DESCRIPCION	CANT.	N° SUMINISTRADOR O NORMA FABRICANTE / N° DIBUJO O CALIDAD MATERIAL	PESO UNITARIO	NOTAS Y OBSERVACIONES

MODIFICACIONES

APLICACIONES

-EDINBURGH TRAM-

	FECHA	NOMBRES
COMPR.		
VERIFIC.		
HOMOL.		
DIBUJ.	19.02.08	
VERIFIC.	19.02.08	

PLANO N°

SUSTITUYE A:

DESIGNACION:

DEVELOPED KINEMATIC ENVELOPE

TOL. GEN. | ESCALA: 1/15

EDICION

HOJA N° 1

N° DE HOJAS 1

ENTIDAD: CAF

REFERENCIA: Q.22.93.105

SUSTITUYE A :

USB00000086-0305

EDICION

EDINBURGH TRAM NETWORK

Tender Query

No: 1001	**Date: 28-09-07**
Query:	In the document '*Tram Technical Information'* as amended by CAF (doc ref: UKPB1-#52182-v7-Tram_Technical_Information-CAF-v1.doc) CAF have indicated the following values: <u>Item</u> <u>Description</u> 6.5 Maximum cant 100mm 6.6 Cant gradient limit 3mm/m max 6.7 Maximum cant deficiency 75mm In the SDS document '*Track Alignment Criteria'* (doc ref: ULE90130-SW-SPN-00001 v2) these items are defined in the context of the Edinburgh Tram Network design and desirable, limiting and exceptional values are given for these. These are design values and allowance needs to be made for tolerances in the construction and maintenance of the infrastructure. The exceptional values may never be exceeded. At the technical meeting between **tie** and CAF on 20th June this year SDS presented the document *Track Construction and Maintenance Tolerances for use in Calculation of DKE for Initial Comparison Purposes.* This document contains construction and maintenance tolerances that SDS consider appropriate to the System design. CAF have responded to this presentation with their document *Maximum Cant Negotiation*, but this contains no values for the parameters mentioned. For item 6.5, the value indicated by CAF in *Tram Technical Information* for the maximum cant is the same as for the exceptional value. What allowance do CAF make for construction and maintenance tolerances in staying within this limit? For item 6.6, the cant gradient limit indicated by CAF in *Tram Technical Information* equates to a gradient of 1:333. In the *Track Alignment Criteria* the exceptional value of the cant gradient is 1:300, and allowance for construction and maintenance tolerances would imply a vehicle characteristic in the region of 1:250. Can CAF please explain how their design will be compliant with the system design in this respect? For item 6.7, the maximum cant deficiency indicated by CAF in *Tram Technical Information* is the same as that for the exceptional value for plain line. In the depot area an exceptional value of 100mm is specified. Can CAF please explain how their design will comply with these values, taking allowance for construction and maintenance tolerances into account?

Response:

For item 6.5:

CAF has accepted the values of maximum cant described at the ER, 100mm in this case. CAF also confirms the compliance with the values mentioned in document *Track Construction and Maintenance Tolerances for use in Calculation of DKE for Initial Comparison Purposes.*

For item 6.6:

The ER requires the compliance with the following information:

Element	Qualifier	Exceptional Limiting Value
Twist (as part of the design)	Short wave (over bogies)	**3.3**
Twist (as part of the design)	Long wave over length of vehicle	**3.0**

CAF will comply with these two values

Additionally CAF has confirmed the compliance with the short wave twist value of 4mm/m (1:250) described at the document *Track Construction and Maintenance Tolerances for use in Calculation of DKE for Initial Comparison Purposes.* This values is more demanding that the one at the ER.

Document *Track Construction and Maintenance Tolerances for use in Calculation of DKE for Initial Comparison Purposes* does not define a value for the long wave over length of the vehicle.

Thus, CAF confirms that complies with the following values described at the ER and the document *Track Construction and Maintenance Tolerances for use in Calculation of DKE for Initial Comparison Purposes*::

	Element Qualifier	Exceptional Limiting Value
Twist	Short wave (over bogies)	**4**
Twist	Long wave over length of vehicle	**3.0**

For item 6.7:

We see no problem in having a cant deficiency of 100m at the accesses of the depot.

Thus, CAF accepts the values of maximum cant deficiency described at the ER, 100mm in this case. CAF also confirms the compliance with the values mentioned in document *Track Construction and Maintenance Tolerances for use in Calculation of DKE for Initial Comparison Purposes.*

EDINBURGH TRAM NETWORK

Tender Query

No: 1002	**Date: 11-10- 07**
Query:	In the CAF drawing Q.00.072.14 (mod B) the transverse stepping distance is shown as being 61 mm. This is derived from the platform edge distance (from 'rail axle', presumed to mean track centre-line) being shown as 1410 mm, and the distance to the outside edge of the vehicle being shown as 1349 mm (also to the rail axle). The ORR requirement is that the stepping distance should never exceed 75mm throughout the life of the system (Railway Safety Publication 2, clause 162) in order to comply with RVAR regulations. In order to achieve this, the ORR recommend (note 1 to clause 162) that the initial design clearance should be no more than 40mm, and this is what our current design allows for. Can CAF please explain how, with new wheels and new rails, the stepping distance will be maintained within the design limit of 40 mm.
Response:	

USB00000086_0309

EDINBURGH TRAM NETWORK

Tender Query

No: 1003	Date: 15-11- 07
Query:	In order to progress simulation modelling of the pantograph and catenary interaction, please can CAF provide the values for the pantograph parameters as shown on the attached sketch.
Response:	

Pantograph Details – Schunk Pantograph Option 1

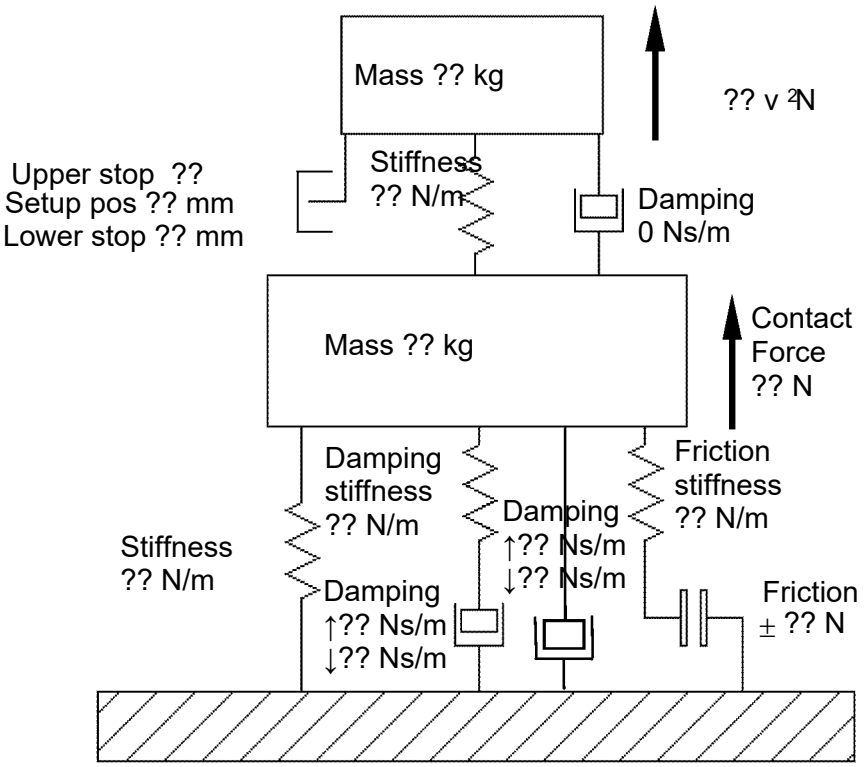

Number of contact strips =
Strip separation =
Head inertia =

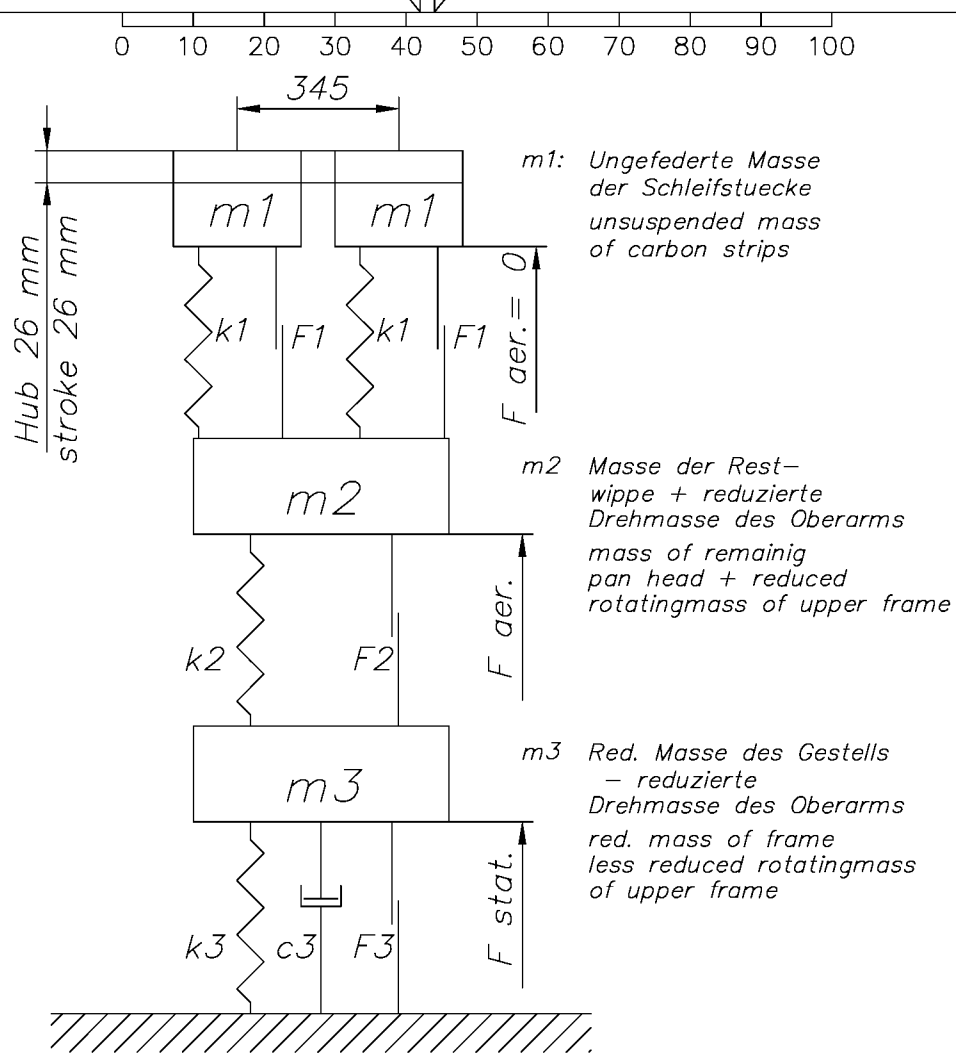

Daten fuer mittlere Arbeitshoehe von 1500mm:
Data for median woking height of 1500 mm:

m1 = 6.34 kg	m2 = 12.1 kg	m3 = 29.2 kg
c1 = 0 Ns/m	c2 = 0 Ns/m	c3 = 50 Ns/m (with blocked raising mechanism)
k1 = 7330 N/m	k2 = 7140 N/m	k3 = 2940 N/m
F1 = ±2 N	F2 = ±2.5 N	F3 = ±2.5 N

F stat. = 85 N

F aer. = 10 N (Spiessgang v = 120 km/h) open direction — min. Arbeitshoehe = 0.15 m min. working position

F aer. = 10 N (Kniegang v = 120 km/h) closed direction — max. Arbeitshoehe = 3.05 m max. working position

Die unbefugte bzw. bestimmungswidrige Verwendung dieser Unterlage ist nicht gestattet und wird gerichtlich verfolgt

Verwendbar fuer:
Citadis

Ausg.
Datum
Maszstab

Allgemeintoleranzen DIN ISO 2768 mittel DIN EN ISO 13920 A, E

Oberflaechen DIN ISO 1302

	Datum	Name
Bearb.	22.5.01	Santner
Gepr.	22.5.01	Pardeller
Norm.		

Massenmodell SBE 922
massmodel SBE 922

Schunk Bahntechnik GmbH Salzburg

4–702R.5722

Blatt 01 / 01 Bl.

Zust.	Aenderung	Datum	Name	Urspr.	Ers.f.	Ers.d.

USB00000086_0311

Zuständiger Bereich: BS	Zuständige Stelle: Fernverkehr	Dokumententyp: Dynamische Kenngrößen			
Erstellt: 2005-09-30 HT		Dynamische Kenngrößen	Dokumentenstatus: freigegeben		
Geprüft: 2005--			7211356		
Freigegeben: 2005-09-02 HT		Dateiname: Dynamische Kenngroessen 1FB801 INTERN_1.DOC	Änderung: 00	Sprache: de	Seite: 1/14
Auftraggeber:		Datum: 2005-09-02	Genehmingt: HT	Ausgabe: 00	Datum:
Materialnummer:					
Verwendbar für:			Einsatz für:		

Dynamische Kenngrößen vom Einholm-Stromabnehmer FB801.00

Ausgabe : - 0 -

Für dieses Dokument und den darin dargestellten Gegenstand behalten wir uns alle Rechte vor. Vervielfältigung, Bekanntgabe an Dritte oder Verwertung seines Inhalts sind ohne unsere ausdrückliche Zustimmung verboten
© 2007, *STEMMANN-TECHNIK* GMBH,

Änderungsnachweis

Ausgabe	Datum	Änderungsgrund	Seite(n)

Für dieses Dokument und den darin dargestellten Gegenstand behalten wir uns alle Rechte vor. Vervielfältigung, Bekanntgabe an Dritte oder Verwertung seines Inhalts sind ohne unsere ausdrückliche Zustimmung verboten
© 2007, *STEMMANN-TECHNIK* GMBH,

Inhaltsverzeichnis

Seite

1 Definitionen 4
2 Relevante Massen für die Berechnung 5
3 Relevante Steifigkeiten für die Berechnung 6
4 Relevante Dämpfungen für die Berechnung 8
5 Relevanten Reibungen für die Berechnung 9
6 Intern Ermittlung der Kenngrößen 10
6.1 Ermittlung der Massen 10
6.1.1 Ermittlung m1 10
6.1.2 Ermittlung m2 11
6.1.3 Ermittlung m3 12
6.2 Ermittlung der Federkonstanten 13
6.2.1 Ermittlung der Federkonstanten c1 von der primären Federung der Wippe 13
6.2.2 Ermittlung der Federkonstanten c2 des Gestells 13
6.2.3 Ermittlung der Federkonstanten c3 des Antriebs 14
6.3 Ermittlung der Reibung 14
6.3.1 Ermittlung der Reibung f2 und f3 des Antriebs 14

Abbildungsverzeichnis

BILD 1 STROMABNEHMER 4
BILD 2 MODELL 4

Für dieses Dokument und den darin dargestellten Gegenstand behalten wir uns alle Rechte vor. Vervielfältigung, Bekanntgabe an Dritte oder Verwertung seines Inhalts sind ohne unsere ausdrückliche Zustimmung verboten
© 2007, *STEMMANN-TECHNIK* GMBH,

1 Definitionen

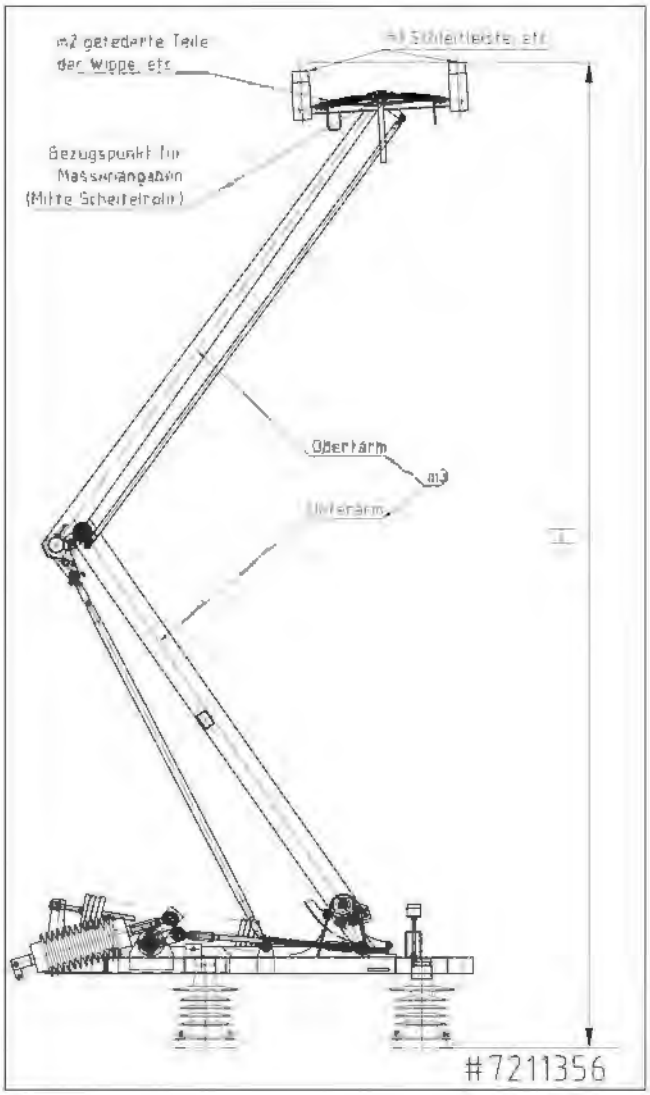

Bild 1 Stromabnehmer

BILD 1 beschreibt die für eine dynamische Berechnung relevanten Komponenten und Bezugspunkte am Stromabnehmer 1FB801.00.

Elemente, die Verbindungsglieder zwischen zwei Massen darstellen, wie z.B. die Strombänder zwischen den Stegen und dem m_2-Anteil des Oberarms, werden mit jeweils 50% zu den entsprechenden Massen addiert. Bezeichnungen und Definitionen an DSA-Stromabnehmern.

Entsprechend der Massenverteilung wird das Modell mit den zugehörigen Massen-, Feder- und Dämpfungskennwerten gebildet. BILD 2 beschreibt die Modellbildung gültig für alle DSA-Bauarten.

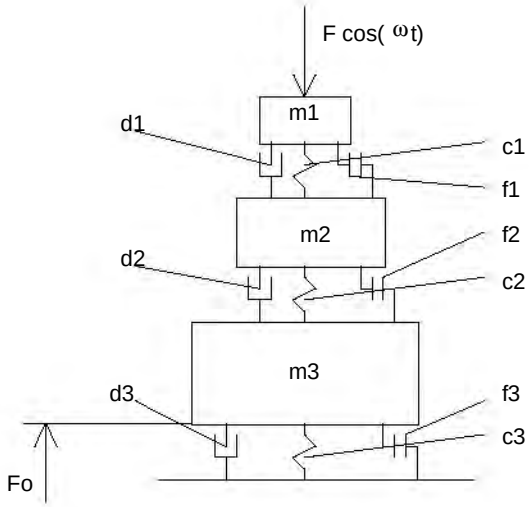

Bild 2 Modell

m_1 bildet sich dabei hauptsächlich aus der Masse der Schleifleisten, den Verbindungsstegen zwischen den Schleifleisten, dem 50%-Anteil an der Wippenfederung und dem Anteil an den Stromverbindern im Wippenbereich

m_2 vereinigt alle im Scheitelpunkt wirkenden Massen, d.h. alle Anbauteile im Bereich des Scheitelrohres, die restlichen Anteile an Stromverbindern und Wippenfedern und zusätzlich jeweils ¼ der Massen des Oberarmes und der Wippenfürung

m_3 bildet sich aus der vertikal schwingenden Masse des Stromabnehmergestells. (Ermittlung siehe Punkt 2) Schwingungsmodell des Stromabnehmers

Für dieses Dokument und den darin dargestellten Gegenstand behalten wir uns alle Rechte vor. Vervielfältigung, Bekanntgabe an Dritte oder Verwertung seines Inhalts sind ohne unsere ausdrückliche Zustimmung verboten
© 2007, *STEMMANN-TECHNIK* GMBH,

2 Relevante Massen für die Berechnung

m_1 = reduzierte ungefederte Massen der Wippe, die direkt am Fahrdraht anliegen (z.B. die Schleifstücke mit Befestigungsteilen) bezogen auf das Scheitelrohr.

SA-Typ	**1FB801.00**
m_1 in kg	**12,07**

m_2 = gefederte Wippenmasse zuzüglich der im Scheitelrohr reduzierten anteiligen Masse des Oberarms (¼ der Oberarmmasse und ¼ der Masse der Wippenführung.

$$m_2 = m_{\text{Wippe gefedert}} + m_{\text{Oberarm(1/4)}} + m_{\text{Wippenführung(1/4)}}$$

SA-Typ	**1FB801.00**
m_2 in kg	**8,61**

m_3 = im Scheitelrohr konzentriert gedachte reduzierte Masse des Ober- und Unterarms der Wippenführung und der Lenkerstange. (lt. Sachs ohne m_2 und m_1 ermittelt)
Die bereits in m_2 enthaltenen Teile aus Oberarm und Wippenführung werden abgezogen.

$$m_3 = m_{\text{red gemessen}} - m_{\text{Oberarm(1/4)}} - m_{\text{Wippenführung(1/4)}}$$

SA-Typ	**1FB801.00**	**Arbeitshöhe über UK-Isolator**
m_3 in kg	**5,47**	**1819 mm (4800 mmTOR)**
	6,29	**2519 mm (5500 mmTOR)**
	5,88	**3319 mm (6300 mmTOR)**

Die Angaben gelten Hubhöhe (H siehe Bild 1), gemessen von Unterkante Isolator bis Oberkante Kohleschleifleiste der Wippe.

Für dieses Dokument und den darin dargestellten Gegenstand behalten wir uns alle Rechte vor. Vervielfältigung, Bekanntgabe an Dritte oder Verwertung seines Inhalts sind ohne unsere ausdrückliche Zustimmung verboten
© 2007, *STEMMANN-TECHNIK* GMBH,

3 Relevante Steifigkeiten für die Berechnung

c_1 = Primäre Federung der Wippe (bei Bauart DSA, mittels 4 Zugfedern) in vertikaler Richtung. Bei der Modellbildung werden die 4 Federn zu einer Feder mit vierfacher Steifigkeit zusammengefasst, dadurch ist eine einfachere Modellbildung möglich.

Die vertikale Kraft Fv in Abhängigkeit der Einfederung a wird mit folgender Ersatzfederkennlinie für vier Federelement hinreichend genau beschrieben:

Fc1= Fv = 0,058 (N/mm^2) *a^2 + 5,1132 N/mm *a + 169,72 N

a bedeutet die Einfederung der Wippe (unbelastet a = 0 mm, voll belastet a = 60 mm)

Die Ersatzfederkonstante der Wippe ergibt sich zu c1= ΔF/Δa

c1 = 0,116 (N/mm^2) *a + 5,1132 N/mm

Für die unbelastete und voll belastete Feder ergeben sich nachfolgende Werte:

Unbelastet bedeutet Einbauzustand (Vorspannung), belastet bedeutet vollständig eingefedert.

SA-Typ	**1FB801.00**
c_1(unbelastet)	5,11 N/mm
c_1(belastet)	12,07 N/mm

c_2 = Biegesteifigkeit des Gestells, bestehend aus Ober- und Unterarm. Die ermittelte Steifigkeit bezieht sich fast ausschließlich auf den Oberarm, da der Unterarm ein sehr steifes Bauteil ist.

SA-Typ	**1FB801.00**	**Arbeitshöhe über UK-Isolator**
c_2 in N/mm	**2,49**	**1819 mm (4800 mmTOR)**
	3,82	**2519 mm (5500 mmTOR)**
	3,45	**3319 mm (6300 mmTOR)**

Für dieses Dokument und den darin dargestellten Gegenstand behalten wir uns alle Rechte vor. Vervielfältigung, Bekanntgabe an Dritte oder Verwertung seines Inhalts sind ohne unsere ausdrückliche Zustimmung verboten
© 2007, *STEMMANN-TECHNIK* GMBH,

Die Angaben gelten Hubhöhe (H siehe Bild 1), gemessen von Unterkante Isolator bis Oberkante Kohleschleifleiste der Wippe.

c_3 = Steifigkeit des Antriebs, in erster Linie durch die Feder hervorgerufen, wird durch das Kurvenblech neutralisiert. Die Anpresskraft wird nahezu konstant über die Arbeitsbereich angenommen. Daher wird die Federsteifigkeit des Antriebs sehr klein. Als geschätzter Wert wird hier 0,001 N/mm zunächst angenommen..

SA-Typ	**1FB801.00**
c_3	0,001 N/mm

Für dieses Dokument und den darin dargestellten Gegenstand behalten wir uns alle Rechte vor. Vervielfältigung, Bekanntgabe an Dritte oder Verwertung seines Inhalts sind ohne unsere ausdrückliche Zustimmung verboten
© 2007, *STEMMANN-TECHNIK* GMBH,

4 Relevante Dämpfungen für die Berechnung

d_1 = Eine Dämpfung der ungefederten Massen ist konstruktiv nicht vorgesehen, ergibt sich aber aus der Reibwirkung in den Gelenkköpfen der Federelemente. Die Dämpfung ist jedoch gering und kann vernachlässigt werden.

d_2 = Eine Dämpfung im Gestell ist nicht vorgesehen aber durch Lagerreibung in den Gelenkpunkten minimal vorhanden. Auch sie wird bei der Modellbildung nicht berücksichtigt.

d_3 = Antriebs- und Fahrdämpfung ist nicht vorhanden

Für dieses Dokument und den darin dargestellten Gegenstand behalten wir uns alle Rechte vor. Vervielfältigung, Bekanntgabe an Dritte oder Verwertung seines Inhalts sind ohne unsere ausdrückliche Zustimmung verboten
© 2007, *STEMMANN-TECHNIK* GMBH,

5 Relevanten Reibungen für die Berechnung

Für die Berechnung relevanten Reibungen

f_1 = Reibung in den Gelenkköpfen der Federaufhängungen der Wippenfederungen. Bleibt unter Windlast nahezu konstant.

SA-Typ	**1FB801.00**
f_1	+/- 0.5 N (geschätzt)

f_2+ f_3 = Die Reibungen f_2 und f_3 können nur in ihrer Gesamtheit aus Hysterese - Messungen ermittelt werden. Da die genaue Verteilung der Gesamtkraft auf f_2 und f_3 nicht ermittelt werden kann, wird eine 50/50 Aufteilung angenommen.

SA-Typ	**1FB801.00**
f_2	+/- 2,5 N
f_3	+/- 2,5 N

Für dieses Dokument und den darin dargestellten Gegenstand behalten wir uns alle Rechte vor. Vervielfältigung, Bekanntgabe an Dritte oder Verwertung seines Inhalts sind ohne unsere ausdrückliche Zustimmung verboten
© 2007, *STEMMANN-TECHNIK* GMBH,

6 Intern Ermittlung der Kenngrößen

6.1 Ermittlung der Massen

6.1.1 Ermittlung m1

Bezeichnung [-]	Artikel-Nr. [-]	Stückzahl [-]	Masse [kg]	Anteilige Masse für m1 [kg]	Gesamtanteilige Masse für m1 [kg]	Bemerkungen [-]
Schleifleiste	21716	2	4,8	4,8	9,6	Gewicht mit Befestigungselementen
Querverstrebung incl		1	0,08	0,04	0,04	
Gewindebolzen M6x250	1211597	1	0,024			
Gelenkkopf KJ6	5540	2	0,028			
Stromband 1 3FB801.00.00.0.109	20258	2	0,17	0,085	0,17	
Steg	1212801 (wie 122041)	2	0,72	0,72	1,44	
Federelement	2207513	4	0,24	0,12	0,48	
Schraubverbindung	-	4	0,02	0,02	0,08	Pos: 50,70, 80 aus Artikel-Nr. 2208148
Windleitblech	1213472	4	0,055	0,055	0,22	
Sicherungsschraube Mu M6 DIN982 A2 Scheibe 6,4 DIN 125	1209874 4548 16432	4	0,01	0,01	0,04	

Daraus ermittelt sich die Masse für m1 wie folgt:

m1 = 12,07 kg

Für dieses Dokument und den darin dargestellten Gegenstand behalten wir uns alle Rechte vor. Vervielfältigung, Bekanntgabe an Dritte oder Verwertung seines Inhalts sind ohne unsere ausdrückliche Zustimmung verboten
© 2007, *STEMMANN-TECHNIK* GMBH,

6.1.2 Ermittlung m2

Die Wippe nach Artikel-Nr. 2208018 wiegt 17,1 kg.

Bezeichnung [-]	Artikel-Nr. [-]	Stück-zahl [-]	Masse [kg]	Anteilige Masse für m2 [kg]	Gesamt-anteilige Masse für m2 [kg]	Bemerkungen [-]
Wippe	**2208018**	**1**			**17,1**	**bestehend aus**
Schleifleiste	21716	2	4,8	9,6		Gewicht mit Befestigungselementen
Halter vst rechts mit Stromband, Hebel, Auflaufhorn,		1	3,5	3,5		
Halter vst links mit Stromband, Hebel, Querverstrebung, Auflaufhorn,		1	4,0	4,0		
Achse	20098	1	0,62	0,62		

Zur Ermittlung der Masse m2 muss folgende Massen m1 subtrahiert werden.

abzüglich Wippenmasse m1			12,07	12,07	**-12,07**	

Die folgenden Massen werden zur Wippenmasse addiert:

Wippenführung	2208017	1	1,02	0,26	0,255	7
Schraubverbindung		4	0,02	0,02	0,08	
Oberarm	2208016	1	10,5	2,63	2,625	
Summe zu addierende Massen					**2,96**	
ermittelte Massen m2					**8,61**	

Daraus ermittelt sich die Masse für m2 wie folgt:

m2 = 8,61 kg

Für dieses Dokument und den darin dargestellten Gegenstand behalten wir uns alle Rechte vor. Vervielfältigung, Bekanntgabe an Dritte oder Verwertung seines Inhalts sind ohne unsere ausdrückliche Zustimmung verboten
© 2007, *STEMMANN-TECHNIK* GMBH,

6.1.3 90

6.1.4 Ermittlung m3

C_{Feder} = 474,15 N/m

Versuch [-]	Dauer für 10 Schwingungen [s]			Dauer T für 1 Schwingung [s]		
	1819	2519	3319	1819	2519	3319
1	8,4	8,8	8,6	0,84	0,88	0,86
2	8,4	8,8	8,6	0,84	0,88	0,86
3	8,4	8,8	8,6	0,84	0,88	0,86
4	8,4	8,8	8,6	0,84	0,88	0,86
5	8,4	8,8	8,6	0,84	0,88	0,86
Die mittlere Dauer für 1 Schwingung beträgt: =				**0,84**	**0,88**	**0,86**

Hieraus ergibt sich nach der Formel $m_{dyn} = T^2 \bullet c / (4 \bullet \Pi^2)$ folgende dynamische Masse:

$m_{dyn} = (0{,}84s)^2 \bullet 474{,}15\ (N/m) / (4 \bullet \pi^2) =$

H in [mm]	1819	2519	3319
m_{dyn} in kg	8,47	9,30	8,88

Die folgenden Massen werden von der dynamischen Masse subtrahiert:

Bezeichnung [-]	Artikel-Nr. [-]	Stückzahl [-]	Masse [kg]	Anteilige Masse für m3 [kg]	Gesamtanteilige Masse für m3 [kg]	Bemerkungen [-]
Feder	-	1	0,54	0,18	-0,18	
Adapter	-	1	0,2	0,2	-0,2	
Oberarm	2208016	1	10,5	2,63	-2,63	
					-3,00	

Daraus ermittelt sich die Masse für m3 wie folgt:

m3 =f(Arbeitshöhe)

H in [mm]	1819	2519	3319
m3 in kg	5,47	6,29	5,88

Für dieses Dokument und den darin dargestellten Gegenstand behalten wir uns alle Rechte vor. Vervielfältigung, Bekanntgabe an Dritte oder Verwertung seines Inhalts sind ohne unsere ausdrückliche Zustimmung verboten
© 2007, *STEMMANN-TECHNIK* GMBH,

6.2 Ermittlung der Federkonstanten

6.2.1 Ermittlung der Federkonstanten c1 von der primären Federung der Wippe

Die Feder hat folgende Daten:

L_0 = 93 mm

F_0 = 20 N

c_{Feder} = 12,792 N/mm

Die Federelemente nach Z.-Nr. 3DSA200.12.07.1 sind so vorgespannt, dass sie bei einer Länge von 263,5 mm, gemessen über Mitten der Gelenkköpfe, eine Federkraft von 325 N (das entspricht einer Federlänge 116,84 mm) von entwickeln.

Des weiteren sind die Federelemente bei Wippe in Ruhelage (Steg am oberen Anschlag des Halters Geschweißt) auf eine Länge von 262,2 mm und bei Wippe in voll belasteter Lage (Steg am unteren Anschlag des Halters Geschweißt) auf eine Länge von 276,8 mm vorgespannt.

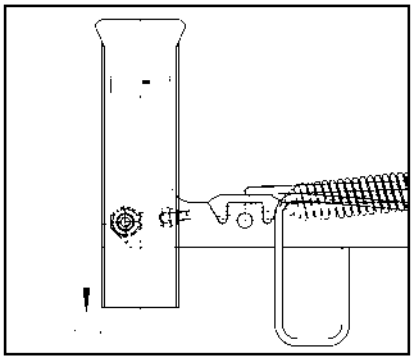

<u>Ermittlung der Federkonstanten siehe excel-Datei Dynamische Kenngrössen 1FB801.00.xls[Ermittlung c1)</u>

Aus der Diagonalkomponente lässt sich der für die Simulation erforderliche vertikale Anteil herleiten.

Die vertikale Kraft Fv in Abhängigkeit der Einfederung a wird mit folgender Ersatzfederkennlinie für ein Federelement hinreichend genau beschrieben:

Fv= f(a) = 0,0145 (N/mm^2) * a^2 + 1,2783 N/mm * a + 42,43 N

Mit vier Federelementen in der Wippe resultiert daraus eine Gesamtvertikalkraft

Fv = f(a)= 4 *(0,0145 (N/mm^2) * a^2 + 1,2783 N/mm * a + 42,43 N)

Fc1= Fv = 0,058 (N/mm)^2 *a^2 + 5,1132 N/mm *a + 169,72 N

Die Ersatzfederkonstante der Wippe ergibt sich zu c1= dF/da

c1 = 0,116 (N/mm^2) *a + 5,1132 N/mm

Für die unbelastete und voll belastete Feder ergeben sich nachfolgende Werte:

SA-Typ	**1FB801.00**
c_1(unbelastet)	5,11 N/mm
c_1(belastet)	12,07 N/mm

6.2.2 Ermittlung der Federkonstanten c2 des Gestells

siehe Datei „Dynamische Kenngrössen 1FB801.00.xls[Ermittlungc2]

Für dieses Dokument und den darin dargestellten Gegenstand behalten wir uns alle Rechte vor. Vervielfältigung, Bekanntgabe an Dritte oder Verwertung seines Inhalts sind ohne unsere ausdrückliche Zustimmung verboten
© 2007, *STEMMANN-TECHNIK* GMBH,

Daraus ergibt sich die Federkonstante für c2:

SA-Typ	**1FB801.00**	**Arbeitshöhe über UK-Isolator**
c_2 in N/mm	**2,49**	**1819 mm (4800 mmTOR)**
	3,82	**2519 mm (5500 mmTOR)**
	3,45	**3319 mm (6300 mmTOR)**

6.2.3 Ermittlung der Federkonstanten c3 des Antriebs

siehe Datei „Dynamische Kenngrössen 1FB801.00.xls[Ermittlungc2]

Steifigkeit des Antriebs. In erster Linie durch die Feder hervorgerufen. Beim Stromabnehmer FB801 wird die Federkraft der Antriebsfeder durch das Kurvenblech in eine konstante Anpresskraft umgewandelt. Daher wird die Federsteifigkeit des Antriebs sehr klein. Als geschätzter Wert wird hier 0,001 N/mm zunächst angenommen.

SA-Typ	**1FB801.00**
c_3	0,001 N/mm

6.3 Ermittlung der Reibung

6.3.1 Ermittlung der Reibung f2 und f3 des Antriebs

Die Reibungen f_2 und f_3 können nur in ihrer Gesamtheit aus Hysterese - Messungen ermittelt werden. Da die genaue Verteilung der Gesamtkraft auf f_2 und f_3 nicht ermittelt werden kann, wird eine 50/50 Aufteilung angenommen.
Aus Anpresskraft wird eine Reibungskraft von ca. 5 N ermittelt. Die Reibung teilt sich in
f2=f3 = ±2,5 N auf

Für dieses Dokument und den darin dargestellten Gegenstand behalten wir uns alle Rechte vor. Vervielfältigung, Bekanntgabe an Dritte oder Verwertung seines Inhalts sind ohne unsere ausdrückliche Zustimmung verboten
© 2007, *STEMMANN-TECHNIK* GMBH,

Dynamische Kenngrößen des DSA Stromabnehmers
Dynamic Characteristics of the DSA Pantograph

Just provided for English translation of Dynamische Kenngrößen vom Einholm-Stromabnehmer FB801.00

1. Definitionen/*Definitions*

BILD 1 beschreibt die für eine dynamische Berechnung relevanten Komponenten und Bezugspunkte am DSA - Stromabnehmer.
Picture 1 describes the relevant components and reference points for a dynamic calculation.

Elemente, die Verbindungsglieder zwischen zwei Massen darstellen, wie z.B. die Strombänder zwischen den Stegen und dem m_2-Anteil des Oberarms, werden mit jeweils 50% zu den entsprechenden Massen addiert.
Elements forming the connection between two masses such as bridging strands between the bars and the m_2 share of the upper arm are being added to the corresponding masses with each 50 %.

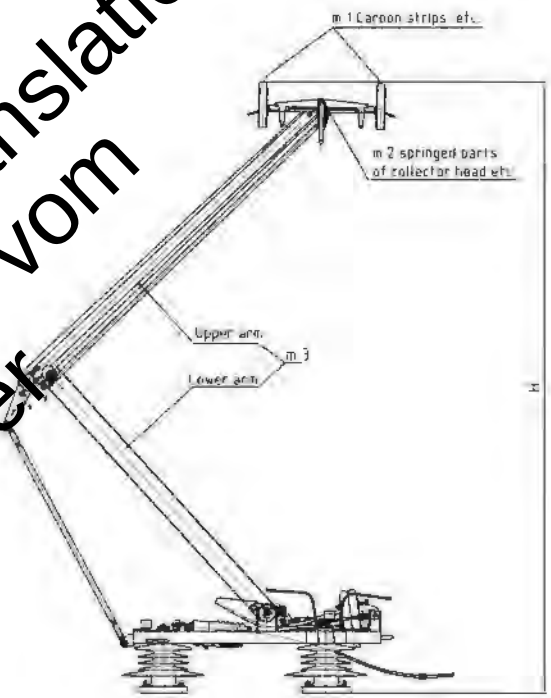

BILD 1/ *Picture 1*:
Bezeichnungen und Definitionen an DSA-Stromabnehmern
Designation and definitions at the DSA pantograph.

Entsprechend der Massenverteilung wird das Modell mit den zugehörigen Massen-, Feder- und Dämpfungskennwerten gebildet. BILD 2 beschreibt die Modellbildung gültig für alle DSA-Bauarten.
Corresponding to the masses allocation, the scheme with the associated masses, spring and damping characteristics is being elaborated. Picture 2 describes the scheme creation valid for all DSA versions.

m_1 bildet sich dabei hauptsächlich aus der Masse der Schleifleisten, den Verbindungsstegen zwischen den Schleifleisten, dem 50%-Anteil an der Wippenfederung und dem Anteil an den Stromverbindern im Wippenbereich.
m_1 mainly consists of the contact strip mass, the connecting bars between the contact strips, the 50 % share of the collector head springing and the share of the current connection in the collector head area.

m_2 vereinigt alle im Scheitelpunkt wirkenden Massen, d.h. alle Anbauteile im Bereich des Scheitelrohres, die restlichen Anteile an Stromverbindern und Wippenfedern und zusätzlich jeweils ¼ der Massen des Oberarmes und der Wippenführung
m_2 combines all masses affecting on the zeniths i.e. all components within the area of the peak tube, the remaining shares of current connections and the collector head springs and additional each ¼ of the masses of the upper arm and the collector head guidance.

m_3 bildet sich aus der vertikal schwingenden Masse des Stromabnehmergestells. (Ermittlung siehe Punkt 2)
m_3 is composed by the vertical vibrating mass of the pantograph frame. (Determination cf. item 2).

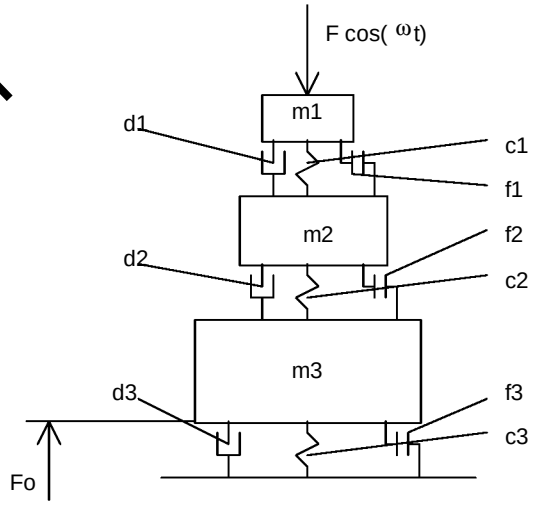

BILD 2/*Picture 2*:
Schwingungsmodell des Stromabnehmers
Vibration scheme of the pantograph

Just provided for English translation of Dynamische Kenngrößen vom Einholm-Stromabnehmer FB80100

2. Für die Berechnung relevante Massen/*For the calculation of the relevant masses*

m_1 = reduzierte ungefederte Massen der Wippe, die direkt am Fahrdraht anliegen (z.B. die Schleifstücke mit Befestigungsteilen) bezogen auf das Scheitelrohr.

m_1 = reduced unsprung masses of the collector head having direct contact to the catenary wire (e.g. the contact piece with attachment parts) related to the peak tube.

m_2 = gefederte Wippenmasse zuzüglich der im Scheitelrohr reduzierten anteiligen Masse des Oberarms (¼ der Oberarmmasse und ¼ der Masse der Wippenführung.

m_2 = springed collector head mass plus the reduced proportionate mass of the upper arm in the peak tube (1/4 of the upper arm mass and ¼ of the collector head guidance mass)

$$m_2 = m_{\text{Wippe gefedert/}\textbf{head springed}} + m_{\text{Oberarm(1/4)/}\textbf{upper arm (1/4)}} + m_{\text{Wippenführung(1/4)/}\textbf{Head Guidance (1/4)}}$$

m_3 = im Scheitelrohr konzentriert gedachte reduzierte Masse des Ober- und Unterarms der Wippenführung und der Lenkerstange. (lt. Sachs ohne m_2 und m_1 ermittelt)
Die bereits in m_2 enthaltenen Teile aus Oberarm und Wippenführung werden abgezogen.

m_3 = the mass of the upper and lower arm of the collector head guidance and the guide rod concentrated meant reduced in the peak tube (acc. to Sachs determined without m_2 and m_1)

$$m_3 = m_{\text{red gemessen/}\textbf{red measured}} - m_{\text{Oberarm/}\textbf{Upper arm}(1/4)} - m_{\text{Wippenführung/}\textbf{Head Guidance}(1/4)}$$

3. Für die Berechnung relevante Steifigkeiten/*For the calculation of the relevant stability*

c_1 = Primäre Federung der Wippe (bei Bauart DSA, mittels 4 Zugfedern) in vertikaler Richtung.
Bei der Modellbildung werden die 4 Federn zu einer Feder mit vierfacher Steifigkeit zusammengefasst, dadurch ist eine einfachere Modellbildung möglich.
Unbelastet bedeutet Einbauzustand (Vorspannung), belastet bedeutet vollständig eingefedert.

c_1 = Primary springing of the collector head (in case of version DSA by means of 4 tension springs) in vertical direction.

Just provided for English translation of Dynamische Kenngrößen vom Einholm-Stromabnehmer FB801.00

In case of scheme elaborating the 4 springs are being summarized to one spring with 4-fold stability. Thereby a more simple scheme elaboration is possible. Unloaded means installation state (pre-tensioned); loaded means completely compressed.

c_2 = Biegesteifigkeit des Gestells, bestehend aus Ober- und Unterarm. Die ermittelte Steifigkeit bezieht sich fast ausschließlich auf den Oberarm, da der Unterarm ein sehr steifes Bauteil ist.

c2 = Bending stability of the rack, consisting of the upper and lower arm. The determined stability refers nearly solely to the upper arm because the upper arm is a very rigid component.

Die Angaben gelten für eine Hubhöhe (H siehe Bild 1) von 1500 mm, gemessen von Unterkante Isolator bis Oberkante Kohleschleifleiste der Wippe.
The details are valid for a raising height (H cf. picture 1) of 1500 mm measured from lower edge insulator up to upper edge carbon strip of the collector head.

c_3 = Steifigkeit des Hubantriebes. In erster Linie durch den Balgzylinder hervorgerufen.
Bei allen Stromabnehmern DSA baugleich.

c_3 = Stability of the hoist drive. In first instance by means of the bellow cylinder. Same design at all DSA pantographs.

4. **Für die Berechnung relevante Dämpfungen/*For the calculation of the relevant damping***

d_1 = Eine Dämpfung der ungefederten Massen ist konstruktiv nicht vorgesehen, ergibt sich aber aus der Reibwirkung in den Gelenkköpfen der Federelemente. Die Dämpfung ist jedoch gering und kann vernachlässigt werden.

d_1 = A damping of the unsprung masses is not intended by design however occurs due to the friction effect in the swivel heads of the spring elements. The damping however is low and can be waived.

d_2 = Eine Dämpfung im Gestell ist nicht vorgesehen aber durch Lagerreibung in den Gelenkpunkten minimal vorhanden. Auch sie wird bei der Modellbildung nicht berücksichtigt.

d_2 = Damping within the rack is not intended but minimally existing by bearing friction in the joint points. These will not be considered for the scheme, either.

d_3 = Antriebs- und Fahrdämpfung. Ein hydraulischer Dämpfer ist die einzig konstruktiv vorgesehene Dämpfung am Stromabnehmer. Er dient in erster Linie der Dämpfung des Absenkvorgangs. Seine Kennlinie ist so aus- gelegt, das er seine optimale Dämpfung in nahezu eingefahrener Stellung des Stromabnehmers, kurz vor dem Aufsetzen in Senkstellung, also unterhalb der minimal zu berücksichtigenden Fahrdrahtlage, erreicht.

Just provided for English translation of Dynamische Kenngrößen vom Einholm Stromabnehmer FB801.00

Bei größeren Anregungsamplituden während der Fahrt hat er jedoch auch einen Einfluß auf das schwingungstechnische Verhalten des Stromabnehmers.
Der Dämpfer ist bei allen DSA gleicher Bauart.

d_3 = Drive and travelling damping. A hydraulic damper is the only intended damping at the pantograph. In first instance this serves for the damping of the lowering movement. Its characteristic is designed in that way that the optimum damping is reached in nearly closed position of the pantograph shortly prior to coming to lowered position – thus below the minimum catenary wire position to be considered.

5. **Für die Berechnung relevanten Reibungen/*For the calculation of the relavant friction***

f_1 = Reibung in den Gelenkköpfen der Federaufhängungen der Wippenfederungen. Bleibt unter Windlast nahezu konstant.

f1 = Friction in the swivel heads of the spring suspension of the collector head springing. Remains nearly constant under wind load.

f_2+ f_3 = Die Reibungen f_2 und f_3 können nur in ihrer Gesamtheit aus Hysterese-Messungen ermittelt werden. Da die genaue Verteilung der Gesamtkraft auf f_2 und f_3 nicht ermittelt werden kann, wird eine 50/50 Aufteilung angenommen.

f_2 + f_3 = The friction f_2 and f_3 can only be determined out of the Hysterese measurement as a whole. Due to the fact that the exact share of the whole force on f_2 and f_3 cannot be determined a 50/50 share is being assumed.

Just provided for English translation of Dynamische Kenngrößen vom Einholm-Stromabnehmer FB801.00

6. Ermittelte dynamische Kenngrößen des DSA –Stromabnehmers / *Calculated dynamic characteristics of the DSA Pantograph*

Stromabnehmer Typ *Pantograph Type*	**DSA200.27 < 200 km/h**
Wippelänge Collector head length	1950 mm
Kenngrößen / *Parameters*	
m_1 [kg]	18,05
m_2 [kg]	8,04
m_3 [kg]	7,73
c_1 (unbelastet/*unloaded*) [N/mm]	5,3
c_1 (belastet/ *loaded*) [N/mm]	8,8
c_2 [N/mm]	7,70
c_3 [N/mm]	0,08
d_1 [Ns/m]	0
d_2 [Ns/m]	0
d_3 [Ns/m]	70
f_1 [N] (geschätzt / *estimated*)	+/- 0,5
f_2 [N]	+/- 3,5
f_3 [N]	+/- 3,5

Änderungsstand/*Index*

Zustand/ **State**	Änderung/**Revision**	Datum/**Date**	Name
00	- Erstausgabe / **First version**	2007-11-21	HT

Just provided for English translation of Dynamische Kenngrößen vom Einholm-Stromabnehmer FB801.00

Responsable division: BS	Responsable bureau: Lightrail	Type of document: Technical Documentation		
Prepared: 2007-11-21 MU		Component-Description	State of document: Released	
Checked: 2007-11-21 MG				
Released: 2007-11-21 MG		Filename: Fb80.73_Description_01.doc	Revision: 00	Language: e / Page: 1/9
Client:		Date: / Approved:	Issue: 01	Date: 2007-11-21

Single Arm Pantograph
Fb80.73

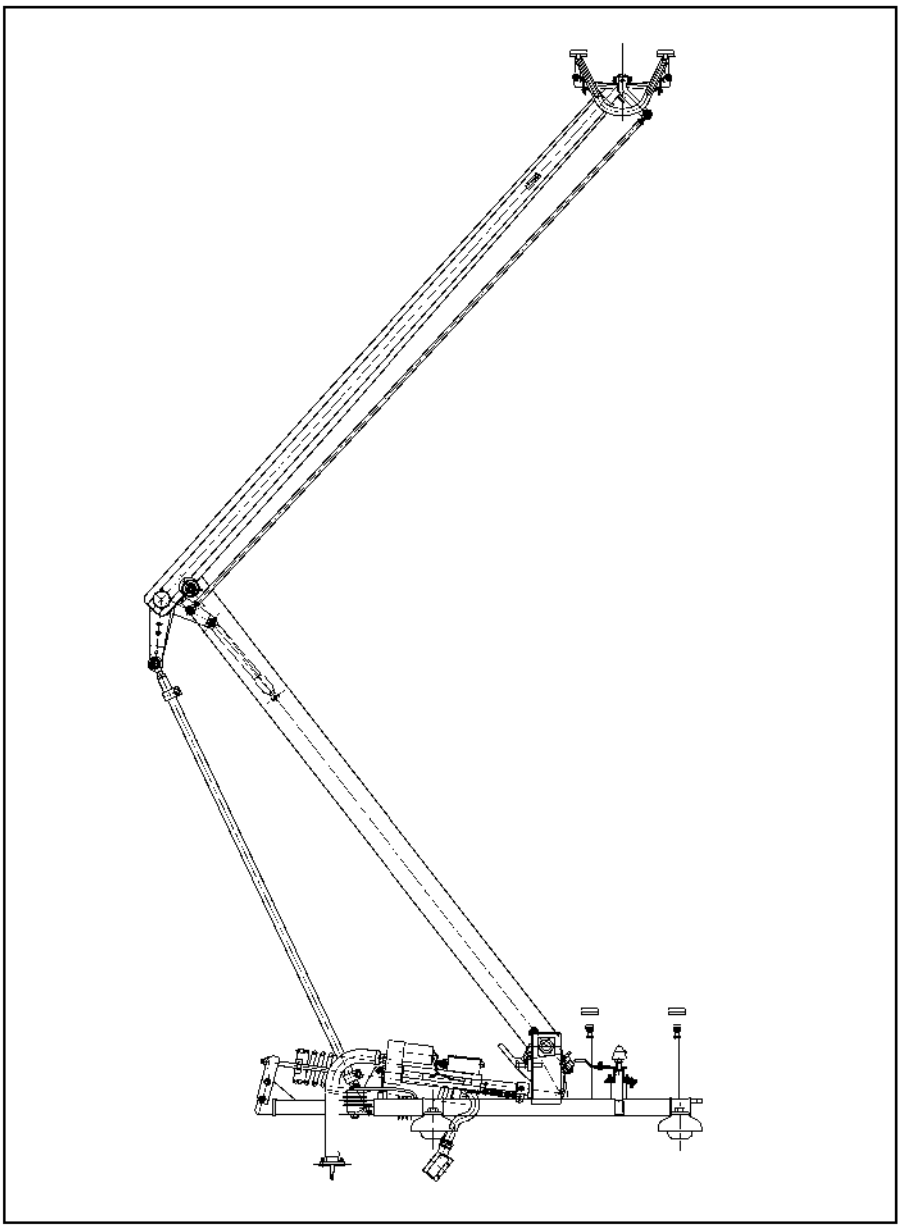

Issue : **- 1 -**

Vertraulich und gesetzlich geschützt
© 2007, *STEMMANN-TECHNIK* GMBH,

Proof of change

Issue	Date	Cause of revision	Page(s)
1	2007-11-21	First issue	all

Vertraulich und gesetzlich geschützt
© 2007, *STEMMANN-TECHNIK* GMBH,

Table of contents

1 Technical data 4
1.1 Spindle drive 4
1.1.1 Data of limit switch (spindle drive) 5
1.1.2 Data of emergency device at the spindle drive 5
2 Description of pantograph and pantograph components 6
2.1 Base frame 6
2.1.1 Insulators 6
2.2 Frame 6
2.2.1 Lower strut 6
2.2.2 Lower guide rod 6
2.2.3 Upper strut 6
2.2.4 Upper guide rod 7
2.3 Collector head 7
2.3.1 Contact strips 7
2.3.2 End horns 7
2.4 Raising and lowering arrangement 7
2.4.1 Tension spring 7
2.4.2 Spindle drive 7
2.4.3 Emergency operation 8
2.4.4 Description of the spindle drive 8
2.5 Damper 8
2.6 Latching 8
2.7 Current transmission 9

Vertraulich und gesetzlich geschützt
© 2007, *STEMMANN-TECHNIK* GMBH,

1 Technical data

Equipment designation:	Pantograph
Design:	single arm
Type:	Fb 80.73
Nominal system voltage:	1500 V
Rated current:	1500 A (metal impregnated contact strips)
Peak current:	2250 A (metal impregnated contact strips)
Static contact force:	60 – 120 N adjustable
Supply voltage:	24 V DC
Velocity:	up to 120 km/h
Raising:	approx. 5 s
Lowering:	approx. 5 s
Weight:	approx. 166 kg
Material	
Base frame:	steel
Lower strut:	steel
Lower guide rod:	aluminium-alloy / stainless steel
Upper strut:	aluminium-alloy / stainless steel
Upper guide rod:	aluminium-alloy / stainless steel
Collector head:	aluminium-alloy / stainless steel

1.1 Spindle drive

max. mechanical load:	4500 N
rated voltage:	24 V (DC)
permitted voltage range:	16,8 – 30 V (DC)
Amperage (load-dependent at 24 V DC):	
at 0 N load:	2,5 A
	(as, when pantograph is raised)
at 2500 – 3000 N load:	approx. 8 – 9 A
	(as, when pantograph is lowered)
10 A fuse required	
at max. load of 4500 N:	13 A
Stroke:	150 mm
Spindle pitch:	5,08 mm
Feeding speed (linear, load-dependent)	
at 0 N load:	30 mm/s
at 4500 N load:	18 mm/s
Gear reduction ratio:	1:10
cyclic duration factor period (temperature dependent)	
Periodic duty:	10 % ED (bei 25°C)
Protection class:	IP 65
Operating temperature:	-25°C / +65°C

Vertraulich und gesetzlich geschützt
© 2007, *STEMMANN-TECHNIK* GMBH,

1.1.1 Data of limit switch (spindle drive)

Magnetic sensor: art.-no. 4146 (normally open) and 4147 (normally closed)

Switching capacity:	10 W
max. voltage:	100 V (DC)
max. current:	0,5 A (DC)
max. switching resistance:	0,2 Ω
Operating voltage:	24 V (DC)
Operating current:	0,417 A (DC)
Operating temperature:	-25°C / +65°C
Housing material:	Polyester
Protection class:	IP 67

1.1.2 Data of emergency device at the spindle drive

(flexible shaft with protective tubing)

Manual crank:

Quantity of turns:	approx. 80

(to cover the full stroke, 150 mm stroke length)

Vertraulich und gesetzlich geschützt
© 2007, *STEMMANN-TECHNIK* GMBH,
\\Stemmann1\docs\docs\BS\Handbuch\Fb80\Fb80.73\Fb80.73_Description_01.doc

2 Description of pantograph and pantograph components

The pantograph conducts electric current from the overhead contact wire to the railway-vehicle. The pantograph consists of a base frame, frame, collector head, raising and lowering arrangement

2.1 Base frame

The base frame is mounted on the railway-vehicle roof. It consists of square hollow tubing, angle steels and plates in welded construction. It carries the mounting supports of the lower strut, the bearing block for the guide rod, the suspensions of the tension spring and spindle drive. Furthermore it carries the buffered supports for the lower strut and the upper strut and the mounting plate for the latching. The main electrical connection is located also at the base frame and clad with copper.

2.1.1 Insulators

The pantograph rests on 4 insulators. The insulators are made of cycloaliphatic cast resin with a stainless-steel M20 pressed-in nut on either side for mounting on the pantograph or on the railway-vehicle roof. The insulators for the mounting base frame – spindle drive are also made of cycloaliphatic cast resin and possess for mounting to the base frame and the spindle drive a stainless-steel M16 pressed-in nut.

The insulators are according DIN 43169 and they are applicable for rated current of 1500 V.

2.2 Frame

The pantograph frame is the pantograph component to which the collector head is mounted and which permits the collector head to move vertically to a reference plane. The kinematics ensure very good contact with the overhead contact wire. Height variations of the overhead contact wire are compensated by the pantograph frame.

2.2.1 Lower strut

The lower strut is welded together from several seamless cold drawn precision steel tubes and is supporting the bearings for the lower strut axle and the centre hinge.

The lower bearings consists of sealed self-aligning ball bearings. The bearings in the middle joint as well as the remaining bearing locations of the strut frame consists of sealed needle bearings.

Welded to the principal axis are the mounting plates for the chain guide plate of the tension spring and the bearing brackets for the tackle lever of the electric spindle drive.

2.2.2 Lower guide rod

The lower guide rod guides the polygonal joint. It consists of aluminium tubing. Its length is set on the left/right handed joint heads on either end.

2.2.3 Upper strut

The upper strut consists of a welded aluminium construction in closed frame design.

It consists of drawn profile tubing, a round upper strut cross tube and the upper struts joint welded plates for the lower guide rod und the damper. The bearings for the lower strut are welded into the profile tubing.

The frame is braced by diagonal bracings of stainless steel.

Vertraulich und gesetzlich geschützt
© 2007, *STEMMANN-TECHNIK* GMBH,

2.2.4 Upper guide rod

The upper guide rod guides the collector head. It is made of aluminium tubing. Its length is set on the right-handed joint heads on either end.

2.3 Collector head

The collector head is the pantograph component carried on the frame by carbon contact strips and end horns.

It is the direct contact element to the overhead contact wire. The weight of the collector head in relation to the pantograph frame has been minimized as far as possible. The carbon contact strips are mounted on flat springs. The collector head on the upper end of the upper strut is mounted pivoting.

The collector head is guided in the upper guide rod.

2.3.1 Contact strips

The carbon contact strip is the part of the collector head that draws current from the overhead contact wire. The carbon contact strip consists of the carbon and the contact strip holder.

Carbon contact strips and contact strip holder are clamped, brazed or bonded together.

2.3.2 End horns

The end horn is a downward-bent component on either end of a contact strip that prevents lateral contact of the overhead contact wire.

This pantograph is equipped with 2 closed end horn made of aluminium.

2.4 Raising and lowering arrangement

The raising and lowering arrangement controls the extension of the pantograph frame to raise/lower the carbon contact strips in/out of contact with the overhead contact wire. The required raising force is produced by a tension spring and the lowering force is generated by the electric spindle drive.

2.4.1 Tension spring

To raise the pantograph and generate contact force between the carbon contact strips and the overhead contact wire two tension spring are mounted between the base-frame and the principal axis of the lower strut.

The tension spring consists of a helical steel spring. The spring force causes a roller chain to generate a torque on the lower strut. The roller chain is guided along the chain guide plate and coupled to the principal axis of the lower strut. The shape of the chain guide plate varies the effective length of the lever so that the contact force is essentially uniform across the full working range.

2.4.2 Spindle drive

The spindle drive is mounted in insulated form between the base and the lower strut principal axis.

The pantograph is lowered by the linear motion of the electric spindle drive applying a pressure to the principal axis from outside. The spindle drive counteracts the upward force of the tension spring. The force of the spindle drive, through a tackle (= freewheeling effect) generates the required torque to lower the frame. The stop brake of the spindle drive is lifted mechanically when the direct-current motor (24 V

Vertraulich und gesetzlich geschützt
© 2007, *STEMMANN-TECHNIK* GMBH,

input voltage) starts running. When the motor stops, the brake automatically prevents the spindle from turning.

Mounted on the spindle drive are 4 magnetic sensors (see circuit diagram). Two of these act as limit switches B1 and B2 (part-no. 535071, article no. 4147) for the spindle and one each to signal highest position - B4 and lowest position B3 (part-no. 535070, art.-no. 4146).

2.4.3 Emergency operation

The spindle drive has an emergency operation by flexible shaft and manual crank that can be used from inside the car.

Mounted on the gear of the spindle drive is a flexible shaft with angle drive connected with a lead through in the roof of the railway-vehicle. The crank is installed in the roof duct from inside the railway-vehicle.

	HINT!
	Some 80 turns of the crank are needed to fully raise the pantographs. To raise or lower the pantograph rotate the crank until the safety clutch engages!

The particular advantage of this design is that the safety clutch ensures that only a small torque acts on the crank if by chance the drive is powered by motor while the pantograph is being cranked. This is a major safety aspect of the construction.

2.4.4 Description of the spindle drive

(see also wiring diagram 4Fb700.sp1)

By activating the key-switch “**Raising**” the spindle drive is closed via a contactor K1. The pantograph is brought into contact with the overhead contact wire. When the spindle drive is at extreme upper position, the active face of magnetic sensor B1 that is mounted on the spindle drive is covered by the magnet on the thrust tube (inside the housing). The magnetic sensor B1 turns off contactor K1 and along with this, the spindle drive.

The output signal of the extreme upper position sensor (magnetic sensor B4) is available to the user. The extreme upper position sensor sends a signal that the spindle drive has reached the extreme position in which the wire is contacted.

By activating the key-switch “**Lowering**” the spindle drive is closed via contactor K2. The pantograph is removed from contact with the overhead contact wire. When the spindle drive is at extreme lower position, the active face of magnetic sensor B2, that is mounted on the spindle drive is covered by the magnet on the thrust tube (inside the housing). The magnetic sensor B2 turns off contactor K2 and along with this, the spindle drive. At this point the collector head is at the lowest position.

The output signal of the extreme down position sensor (magnetic sensor B3) is available to the user. The extreme down position sensor sends a signal that the spindle drive has reached the extreme down position.

2.5 Damper

A damper is mounted in the knee joint of the pantograph between the lower strut and the upper strut. It damps mainly the raising movement of the pantograph and avoid therefore that the pantograph builds up.

2.6 Latching

The latching, mounted to the base frame, fix the pantograph in lowest position. At raising of the pantograph to the overhead contact wire the latching will be relaxed automatically.

2.7 Current transmission

The current flow from the carbon contact strip to the main connection on the base frame is via the pantograph frame and the highly flexible bridging strands. All bearings are protected from the negative impact of the current by their insulated mounting.

Vertraulich und gesetzlich geschützt
© 2007, *STEMMANN-TECHNIK* GMBH,

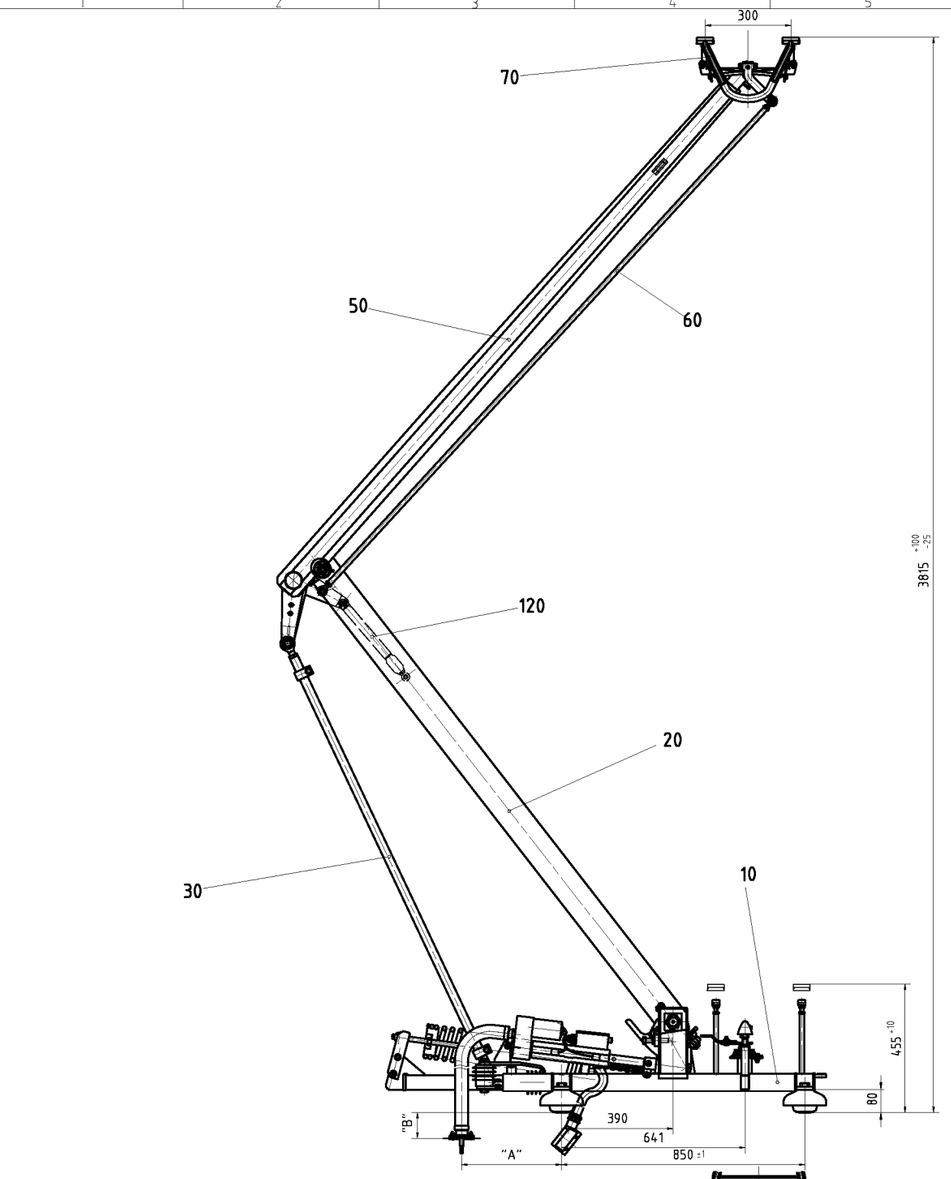

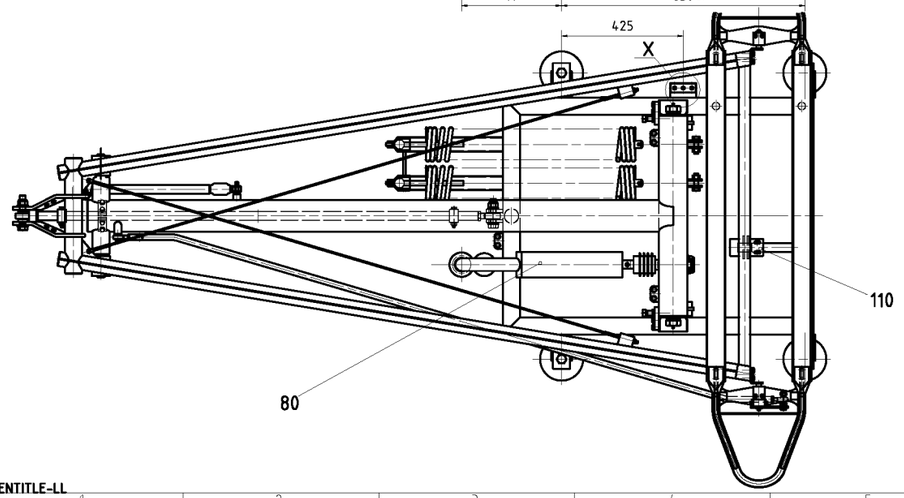

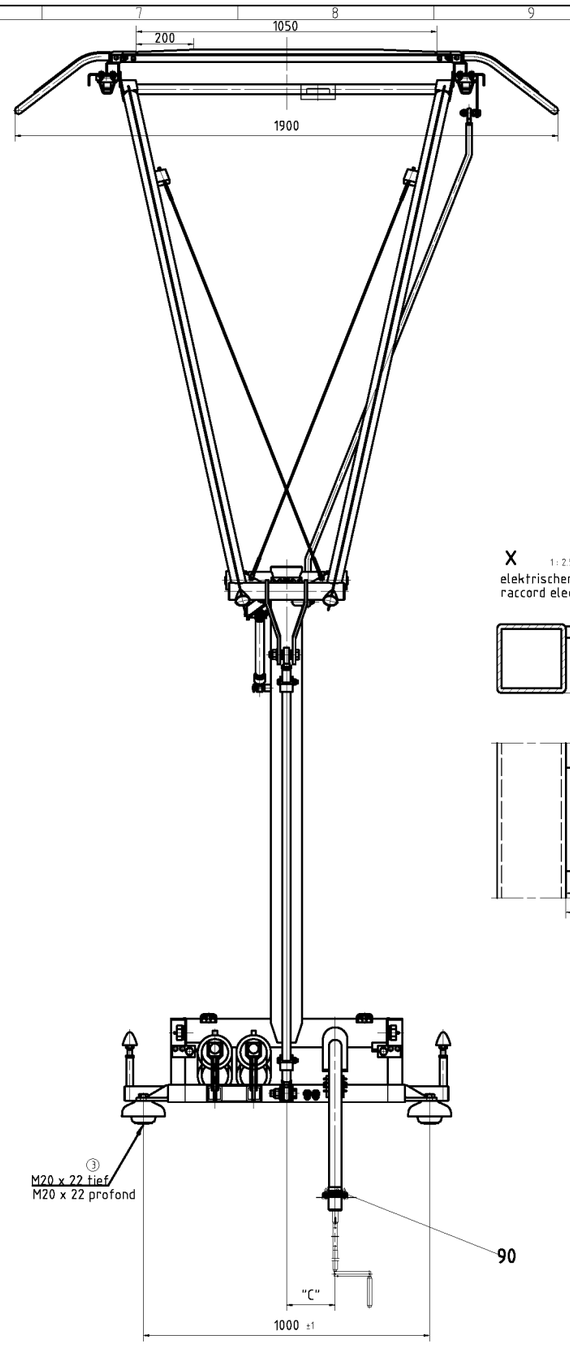

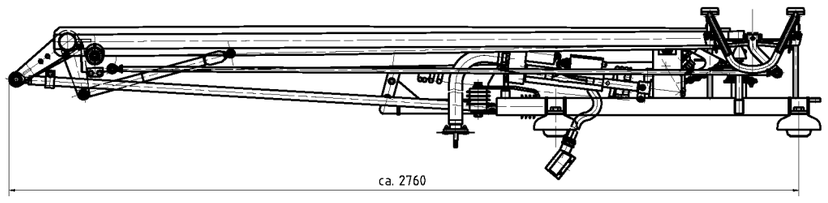

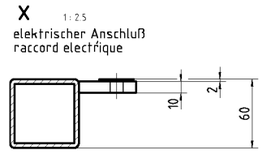

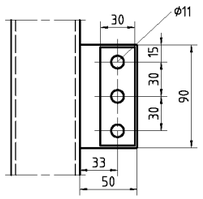

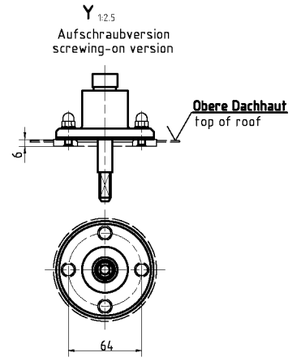

Dachflansch
roof-flange
(gehört nicht zu unserem Lieferumfang)
(is not part of our delivery scope)

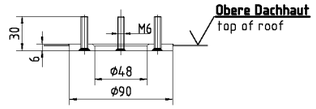

Kundenspezifische Angaben zur Notbefältigungseinrichtung
Données des spéfications du client par commande de secours

Kunde client	biegsame Welle Länge longeur d' axe souple	Dachdurchführung Maße mesures d'ouvertures dans le toit A	B	C	Klemm-version version pincée	Aufschrau-bversion version vissée
Bilbao	850					X

Weitergabe sowie Vervielfältigung dieser Unterlage, Verwertung und Mitteilung ihres Inhalts nicht gestattet, soweit nicht ausdrücklich zugestanden. Zuwiderhandlung verpflichtet zu Schadensersatz. Alle Rechte für den Fall der Patenterteilung oder Gebrauchsmuster-Eintragung vorbehalten.

Copying of this document, and giving it to others and use or communication of the contents there of, are forbidden without expressive permission. Offenders are liable to the payment of damages. All rights are reserved in the event of issuing a patent or the entry of a registered pattern or design.

Pos.	Stk.	Bl.	Benennung	Sachnr./Norm/Lieferant	Werkstoff	Artikelnr.	Teilenr.
110	1	1	Verklinkung manual crank	-	-		
100	1	1	Anord. d. Überbrückungsl. arrangement of bridging strands	-	-		
090	1	1	Handkurbel manual crank	-	-		
080	1	1	Spindelantrieb komplett spindle drive	-	-		
070	1	1	Wippe collector head	-	-		
060	1	1	obere Lenkerstange upper guide rod	-	-		
050	1	1	Oberschiere upper strut	-	-		
040	1	1	Federzug tension spring	-	-		
030	1	1	untere Lenkerstange lower guide rod	-	-		
020	1	1	Unterschiere lower strut	-	-		
010	1	1	Rahmen base frame	-	-		

Art. Nr.: 7211204

Verwendbar für:
Fb80.73

Ausg.
Datum

Maße ohne Toleranzangabe.
ISO 2768-cL
ISO 13920-BF

Oberfläche DIN ISO 1302

Maßstab: 1:10

	Datum	Name
Bearb.	04.05.2000	CW
Gepr.	19.07.2000	DF
Norm		

STEINMANN TECHNIK GmbH

Einholmstromabnehmer
single arm pantograph

1 Fb80.73

Blatt 01 / 01 Bl.

Zust.	Änderung	Datum	Name	Urspr. 1Fb80.71	Ers. f.	Ers. d.
0						

!GENTITLE-LL

USB00000086_0341

EDINBURGH TRAM NETWORK

Tender Query

No: 1004	**Date: 15-11- 07**
Query:	The DKE gauging drawings provided by CAF show that the camera housings of this vehicle do not respect the minimum track centreline clearances as set out in the SDS document '*Track Alignment Criteria v2', (section 19 Track Spacing)*, on large radius curves and on straight track. CAF need to explain how their vehicle will be able to negotiate the alignment throughout the System, whilst also ensuring that two trams may pass anywhere on the System. Given that a substantial amount of the System will be operated at a 50km/h speed limit, is there scope to reduce any of the DKE offsets to take account of this (where appropriate)? If so, can additional gauge drawings please be provided similar in format to CAF drawings Q.00.072.56-60 but with the maximum offset for each curve radius limited to that which would apply for a maximum speed of 50kph? These drawings should show the maximum offset over the body up to a height of 2.1m and the maximum offset over the camera housings, for the interior and exterior of each curve radius.
Response:	

Confirmation of designed track spacing compatibility against Edinburgh Tram CAF vehicle DKE

Scope

Tie has requested recently a review of the Edinburgh Tram CAF vehicle DKE, in order to check its compatibility with the design of track spacing and other parameters from the infrastructure of the ETN system which affect to the dynamics of the vehicle on track.

CAF has produced some information to clarify this situation and this has been submitted to **tie** during the final stages of the tendering process. This document is prepared with the aim of summarising with accuracy all the information and references used, the targets of the study and the calculations produced for the demonstration of compatibility between track spacing definition and the DKE of the vehicle proposed by CAF for the ETN.

1. Information from tie used by CAF for DKE analysis

- Track Construction and Maintenance Tolerances for use in Calculation of DKE for Initial Comparison Purposes (document ref Track Tolerances for DKE Calc 070618a.doc, attached). This document shows relevant information as rail sidewear, horizontal alignment, etc. not covered in any other document, as the Employers Requirements document.

- Maximum cant and cant deficiency values taken from ER version 3.2 (issued on 16.01.2008). These values correspond to those shown in ETN Track Alignment Criteria issued on 23.02.2007 (document ref ULE90130-SW-SPN-00001 V2, attached)

- Track Spacing: the information about distance between track centrelines can be found in different documents, as follows:

  ER version 3.2 (issued on 16.01.2008):

  - Track spacing Plus allowance for DKE Double track main line – track centres – side poles Subject to Tram - 3150mm. (No information neither about whether this applies to straight or curves, nor about evolution of track spacing with reduced radius curves)
  - Track spacing Plus allowance for DKE Double track main line – track centres – centre poles Subject to Tram - 3650mm. (No information neither about whether this applies to straight or curves, nor about evolution of track spacing with reduced radius curves)

ETN Track Alignment Criteria (issued on 23.02.2007 - document ref ULE90130-SW-SPN-00001 V2):

- Track spacing Double track main line – track centres – side poles 3100mm. Separations appropriate for tangent track and curves of radii greater than 450m. (No information about evolution of track spacing with reduced radius curves)
- Track spacing Double track main line – track centres – centre poles 3600mm. Separations appropriate for tangent track and curves of radii greater than 450m. (No information about evolution of track spacing with reduced radius curves)

Typical Tramway Cross Sections (i.e. drawings ref ULE90130-SW-DRG-00031 rev 6 and ref ULE90130-SW-DRG-00032 rev 6, both dated on 23.03.2006, attached):

- Track spacing Double track main line – track centres – side poles 3100mm. Separation applicable to Horizontal radii of 350m or above including straight track. This dimension will increase for curved alignments (refer to tables included in the Assumed Design Tram Vehicle report) with consequential increase in the overall tramway width.
- Track spacing Double track main line – track centres – centre poles 3600mm. Separation applicable to Horizontal radii of 350m or above including straight track. This dimension will increase for curved alignments (refer to tables included in the Assumed Design Tram Vehicle report) with consequential increase in the overall tramway width.

Note: ADTV Report previously referred and used by CAF is ETN Asumed Design Tram Vehicle (issued on 15.03.2006 - document ref ULE90130-SW-SPN-00010 V3, attached)

CAF has worked with the information reflected in the Typical Tramway Cross Sections as per above paragraph, as this is the most restrictive and comprehensive definition of Track Spacing.

2. Objectives

- To accomplish with the ORR RSPG Part 2 Section G 'Guidance on Tramways' (Nov 2006), Point 3 Tramway Clearances, Clearances between Trams, paragraph 110:

110 The clearances between the DKEs of two adjacent trams should be not less than:

(a) without centre traction poles - 100 mm;

(b) with traction poles between the two DKEs - 600 mm (but at least 100 mm from the face of the nearest side of a pole to each DKE).

Note: These clearances are minimum clearances up to 2100 mm above ground level. At heights above 2100 mm, reduced clearances may be acceptable.

- Comply with the RVAR 1998 Guidance, Regulation 23 – Boarding devices, in order not to require a boarding device in Wheelchair compatible doorways:

  Regulation 23 - Boarding devices

  23(1) When a wheelchair-compatible doorway in a regulated rail vehicle is open at a platform at a station or a tram stop a boarding device must be fitted between that doorway and the platform or stop if a disabled person in a wheelchair wishes to use that doorway, unless the gap between the edge of the door sill of that doorway and the edge of the platform or stop is not more than 75 millimetres measured horizontally and not more than 50 millimetres measured vertically.

  And trying to follow the recommendation from RSPG 2G, Point 5 Tramstops, Platform Clearances, paragraph 162

  162 Horizontal clearance between platforms and door thresholds must not exceed 75 mm at doors which are intended to be used by mobility-impaired passengers.12

  Note 1: The dimension of 75 mm is the maximum that must be maintained over the life of the system and it is recommended that at installation a figure of 40 mm is achieved to help ensure compliance with the Rail Vehicle Accessibility Regulations 199812 over the life of the system.

3. Reported information generated by CAF to provide adequacy to the Objectives (2), according to the Information (1) available

- Stepping Distance CAF drawing ref Q.22.00.291 (attached), where a door sill of 65 mm (aluminium extrusion of 50mm + rubber end of 15mm) is proposed, together with a Platform to Track centre distance of 1440mm (at 300mm height).

  This arrangement, in nominal (tare, no wear/tolerances) conditions, provides a gap of just 50mm in horizontal and vertical directions, while protects from any chance of contact between door leaf and platform when opening doors, and allows for reduced speed circulation through stops.

- Updated Developed Kinematic Envelope -DKE- for the CAF Tram Vehicle, drawing ref Q.22.93.105 (attached) and note 'Summary of updates for Edinburgh Tram CAF DKE analysis' (attached) just briefly covering what it has been already communicated to **tie** in recent e-mails in this topic.

- 'Clearance verification – Edinburgh Tram CAF DKE analysis' note (attached) showing adequacy of gaps as required by RSPG 2G, based on the Updated DKE of CAF and the Track Spacing most restrictive information available.

  As a result of this, for any curve radius (and straight) it is demonstrated that more than 100mm of clearance exists at a height up to 2100mm between DKEs of trams crossing in track sections without centre traction poles, while slightly reduced clearances for higher positions (rearview cameras) are obtained, judged as acceptable as per the RSPG 2G Guiadance. No possibility of physical contact exists at any point in these conditions.

  The same rationales and comment applies for clearances between DKEs of trams crossing in track sections with centre traction poles, where values greater than 600mm are found (again for heights up to 2100mm, slightly reduced for higher positions). No possibility of physical contact exists at any point in these conditions.

USB00000086_0347

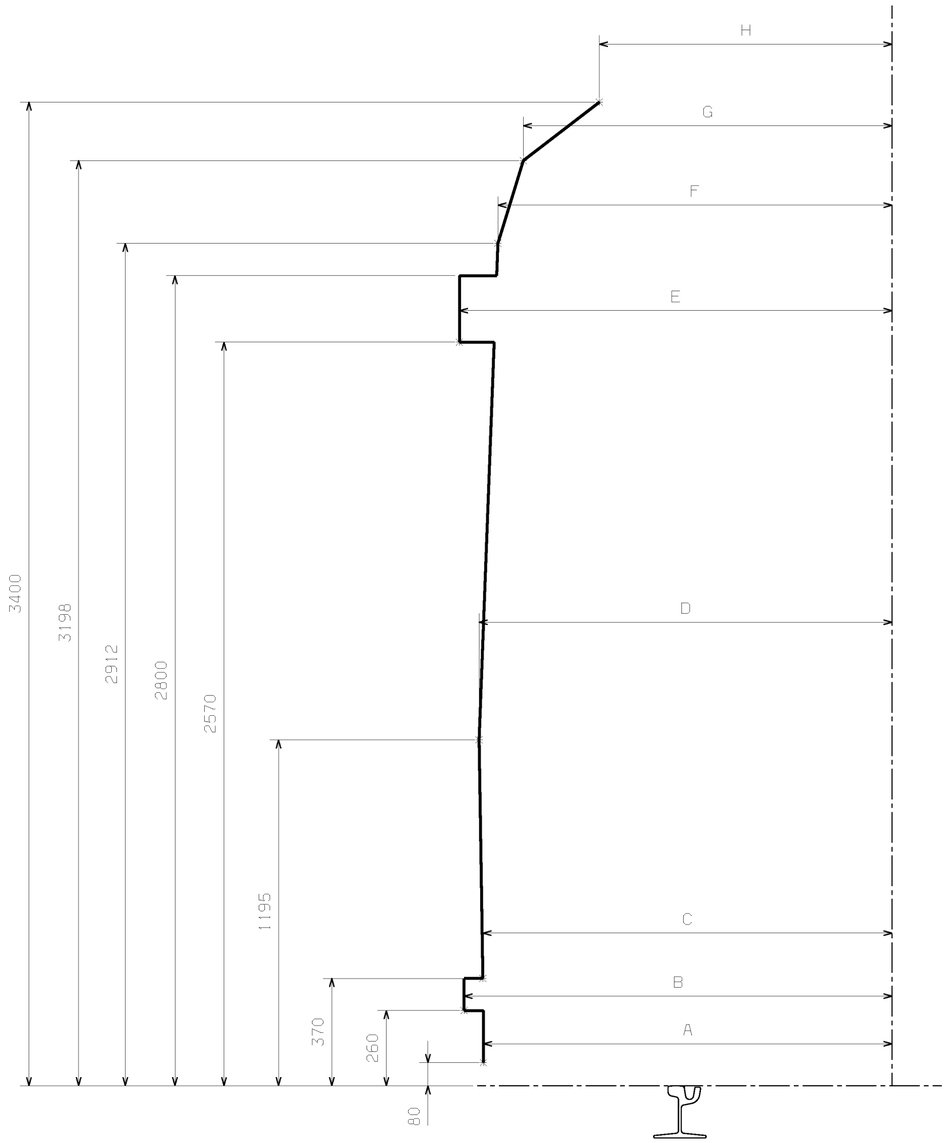

DEVELOPED KINEMATIC ENVELOPE INSIDE CURVE													
Point \ Radius	25	30	40	50	70	90	100	200	300	500	1000	2000	STRAIGHT
A	1575	1550	1518	1499	1476	1462	1457	1433	1427	1420	1418	1419	1414
B	1642	1617	1585	1566	1543	1529	1524	1501	1494	1487	1485	1486	1480
C	1577	1552	1520	1501	1478	1464	1459	1436	1429	1422	1420	1421	1415
D	1593	1567	1536	1517	1494	1480	1475	1451	1444	1438	1435	1437	1425
E	1553	1528	1496	1477	1489	1496	1498	1508	1513	1511	1509	1510	1488
F	1534	1509	1477	1458	1435	1421	1416	1393	1386	1379	1377	1378	1355
G	1447	1421	1389	1370	1348	1334	1329	1305	1298	1292	1289	1291	1266
H	1184	1159	1127	1108	1086	1072	1066	1043	1036	1030	1027	1028	1002

DEVELOPED KINEMATIC ENVELOPE OUTSIDE CURVE													
Point \ Radius	25	30	40	50	70	90	100	200	300	500	1000	2000	STRAIGHT
A	1571	1550	1524	1508	1488	1475	1471	1449	1443	1432	1424	1422	1413
B	1639	1617	1591	1575	1556	1543	1538	1516	1510	1500	1491	1489	1480
C	1574	1552	1526	1510	1491	1478	1473	1451	1445	1435	1426	1424	1415
D	1592	1571	1544	1529	1509	1496	1492	1470	1464	1453	1445	1443	1428
E	1670	1649	1623	1607	1587	1575	1570	1548	1542	1532	1523	1521	1496
F	1539	1518	1492	1476	1457	1444	1439	1417	1411	1401	1392	1390	1363
G	1453	1432	1405	1389	1370	1357	1352	1330	1324	1314	1305	1303	1275
H	1191	1170	1144	1128	1108	1096	1091	1069	1063	1053	1044	1042	1012

MARCA	DESCRIPCION	CANT.	N° SUMINISTRADOR O NORMA FABRICANTE	PESO UNITARIO
			N° DIBUJO O CALIDAD MATERIAL	NOTAS Y OBSERVACIONES

MODIFICACIONES

APLICACIONES

-EDINBURGH TRAM-

	FECHA	NOMBRES
COMPR.		
VERIFIC.		
HOMOL.		

PLANO N°

SUSTITUYE A:

EDICION

TOL. GEN. | ESCALA: 1/15

DESIGNACION: DEVELOPED KINEMATIC ENVELOPE

HOJA N° 1

N° DE HOJAS 1

	FECHA	NOMBRES
DIBUJ.	19.02.08	
VERIFIC.	19.02.08	

ENTIDAD: CAF

REFERENCIA: Q.22.93.105

SUSTITUYE A :

USB00000086-0348

EDICION

Summary of updates for Edinburgh Tram
CAF DKE analysis

Scope

This document just summarises the updates introduced over the DKE analysis presented within the CAF BAFO, and is merely a copy of what it has been communicated to **tie** during the later stages of the Pre Works Mobilisation Agreement.

Summary of Updates

- Roll stiffness (souplesse): the former DKE drawings presented by CAF within the BAFO were produced assuming a roll stiffness factor of 0,25, which is not proper for this kind of vehicles. The right value to be used is 0,1, which represents a stiffer roll behaviour of the carbody on the bogie.

- Bogie - carbody spin angle: the former DKE drawings presented by CAF were showing a value of 0,17deg (produced by traction rods clearance); this is due to the presence of 2 traction rods between bogie and carbody. The current development of CAF for tram bogies (including the bogie to be used with Edinburgh Tram) make use of a single traction rod instead of two (this generates a number of benefits, mainly a reduction of wheel wear and noise). As a consequence, the maximum bogie-carbody relative angle can reach up to 1,17 deg. However, in order to meet a compromise between this feature and the DKE increase, it is limited to a maximum of 0,8 deg.

- Dynamic behaviour: making use of CAF R&D simulation tools, it has been simulated the circulation of the tram though different curves at maximum allowed velocity, taking into consideration the maximum cant deficiency of 100mm. As a result of this, it has been obtained the 'real' bogie to carbody relative angle for every single curve radius. These values are the ones used for this updated DKE, considering this cannot be higher than 0,8 deg as per above point. It is worth to mention that only this bogie to carbody rotation has been adjusted in the DKE analysis to the reflect what it has been obtained from the simulation model.

- In addition, it has been also included the DKE study at a height of H=370mm (near the floor height), as we CAF recently realised about the reduced width of the Assumed Design Tram Vehicle (see ULE90130-SW-DRG-00038, attached) starting from H=768mm downwards. The CAF vehicle does not present such a width reduction at this level and that is why a comparison of DKE between ADTV and CAF vehicle has been included at an intermediate H=370mm, in order to highlight such a difference.

- Finally, it has been implemented an additional representation of DKE at Door sill (at H=370mm), again compared vs the ADTV at this same height. For this purpose, the current proposal of door sill of 65mm (as per our CAF drawing Q.22.00.291 - Stepping Distance) has been used. It must be pointed out that ADTV was not presenting any protrusion from carbody to account for such door sill.

- In addition, CAF has considered the application of a statistical distribution for the rail wear and tolerances (gauge rel. variation and horizontal alignment rel. variation).

  This consists on applying the following formula:
  Wheel – track max clearance = wheel sidewear + wheel rail clearance + 1.2 x SQRT (Gauge variation^2 + Rail sidewear^2 + Horizontal alignm variation^2), instead of adding all parameters.

  Slight improvements have been obtained due to this consideration (as an example, for straight at door sill it has been improved just 16 mm due to this hypothesis)

The following effects are considered for DKE evaluation:

- Geometric swept envelope
- Bogie to track rotation (due to wear and tolerances as per below figures)
- Carbody to bogie rotation
- Transverse displacement (secondary suspension remaining available)
- Roll movement

Also for information, the following parameters are used for the DKE analysis:

- Max Wheel sidewear = 2mm
- Wheel – rail clearance = 5mm
- Gauge rel variation = 5mm
- Rail sidewear = 5mm
- Horizontal align. Rel variation = 10mm

- Primary suspensión transverse displacement = 3.4mm
- Secondary suspensión transverse displacement = 20mm

- Carbody to bogie max spin angle = 0,8º

- Roll pívot axis height = 400mm
- Souplesse = 0,1
- Max cant deficiency = 100 mm
- Max cant = 100 mm
- Equivalent cant due to rail imperfections = 50mm
- Equivalent cant due to Cross level error = 6mm
- Roll angle due to asymmetric passenger loading = 0,45º

Clearance verification – Edinburgh Tram CAF DKE analysis

Scope

This document briefly presents the method to determine the clearance between DKEs of trams crossing track sections without centre pole, making use of the updated DKE of the CAF vehicle for ETN and the available information about Track Spacing. It is also justified the reason why the same rationales can be applied for trams crossing track sections with centre pole.

As a result of this, it is demonstrated the compliance of the CAF vehicle with the RSPG 2G guidance in terms of Tramway clearances.

Method used to determine clearance

For every single curve radius and for relevant tram heights, it has been added the inside DKE of one CAF vehicle with the outside DKE of the crossing CAF vehicle.

In curve radius greater than 350m, the track spacing is constant and equal to 3100mm (for track sections without centre pole). For radius lower than 350m, the track spacing is determined as follows:

Track spacing = inside DKE (cross section) + outside DKE (cross section) + 100mm

Just as an example:

Track spacing for R=50m = 1649 + 1738 +100 = **3487mm**
(find data of DKE cross sections in the Table of drawing ref ULE90130-SW-DRG-00038 Rev 2).

Then, clearance has been calculated for each radius and height as:

Clearance = Track Spacing – (inside DKE CAF vehicle + outside DKE CAF vehicle)

Results in a tabular format can be found at the end of this same document. As a summary, find below clearances (mm) for every single combination of height and radius:

height (m)	Curve Radius (m) 25	30	40	50	70	90	100
370	809,4	618,9	417,0	345,9	266,8	223,9	208,7
1195	905,4	714,9	513,0	441,8	362,8	319,8	304,7
2100	940,1	749,6	547,6	476,5	397,5	354,5	339,4
2683	866,6	676,0	474,1	403,0	289,9	225,5	202,9

height (m)	Curve Radius (m) 200	300	500	1000	2000	Straight
370	145,2	121,2	112,8	124,0	124,8	140,3
1195	241,1	217,2	208,8	219,9	220,7	247,3
2100	275,8	251,8	243,4	254,6	255,4	294,1
2683	105,8	70,4	57,4	68,6	69,4	115,9

Table 1. Clearance (mm) for track without centre poles.

Brief results discussion

The gaps determined for every single combination for heights up to 2100mm are greater that 100mm then complying with RSPG 2G guidance. For heights greater than 2100mm there are few combinations where this clearance value is lower (ranging from 57.4mm to 70.4mm), but equally complying with the RSPG 2G, as reduced gaps are allowed at this height, which corresponds to rearview cameras.

It is also worth to mention that gaps for tighter curves are quite important and clearly higher than 100mm.

In order to provide a graphical interpretation, it has been represented the (inside DKE + outside DKE) for each height, and it has been compared with the Track Separation; this allows to check that no physical contact can take place. Moreover, to check compliance with RSPG 2G of 100mm of clearance (for h ≤ 2100mm), this same comparison is also provided vs. a curve showing Track Separation – 100mm.

Finally, all these rationales and comments are equivalent for track with centre poles, as the nominal track spacing is 3600mm and the clearance recommended in RSPG 2G is 600mm.

Track without centre poles

Outside from one tram + inside from the other crossing tram, according to CAF DKE 20.02.2008 — 27/02/2008

Comparison with Track Separation as per Cross Section 1 of ULE90130-SW-DRG-00031 Rev 6

		Curve Radius												Straight			
	height	**25**	**30**	**40**	**50**	**70**	**90**	**100**	**200**	**300**	**500**	**1000**	**2000**	**5000**			
door sill	**370**	3280,6	3234,1	3176,0	3141,1	3099,2	3072,1	3062,3	3016,8	3003,8	2987,2	2976,0	2975,2	2959,7		inside+outside CAF DKE	*RSPG ask for 100mm gap*
		809,4	618,9	417,0	345,9	266,8	223,9	208,7	145,2	121,2	112,8	124,0	124,8	140,3	gap	=Track Separation - (inside+outside CAF)	*for heights below 2100*
	1195	3184,6	3138,1	3080,0	3045,2	3003,2	2976,2	2966,3	2920,9	2907,8	2891,2	2880,1	2879,3	2852,7		inside+outside CAF DKE	
		905,4	714,9	513,0	441,8	362,8	319,8	304,7	241,1	217,2	208,8	219,9	220,7	247,3	gap	=Track Separation - (inside+outside CAF)	
	2100	3149,9	3103,4	3045,4	3010,5	2968,5	2941,5	2931,6	2886,2	2873,2	2856,6	2845,4	2844,6	2805,9		inside+outside CAF DKE	
		940,1	749,6	547,6	476,5	397,5	354,5	339,4	275,8	251,8	243,4	254,6	255,4	294,1	gap	=Track Separation - (inside+outside CAF)	
rear view camera	**2683**	3223,4	3177,0	3118,9	3084,0	3076,1	3070,5	3068,1	3056,2	3054,6	3042,6	3031,4	3030,6	2984,1		inside+outside CAF DKE	*RSPG allows less than 100mm*
		866,6	676,0	474,1	403,0	289,9	225,5	202,9	105,8	70,4	57,4	68,6	69,4	115,9	gap	=Track Separation - (inside+outside CAF)	*for heights above 2100*
	full height	3990	3753	3493	3387	3266	3196	3171	3062	3025	2994	2972	2962	2950		inside+outside Cross Sections DKE	
		100	100	100	100	100	100	100	100	100	106	128	138	150		Track Separation - (inside+outside Cross Sections DKE)	
		4090	3853	3593	3487	3366	3296	3271	3162	3125	3100	3100	3100	3100		Track separation	
		3990	3753	3493	3387	3266	3196	3171	3062	3025	3000	3000	3000	3000		Track separation - 100mm	RSP2g recommendation for h<2100
		Curves of Raidus < 350m									Curves of Radius R>350m						

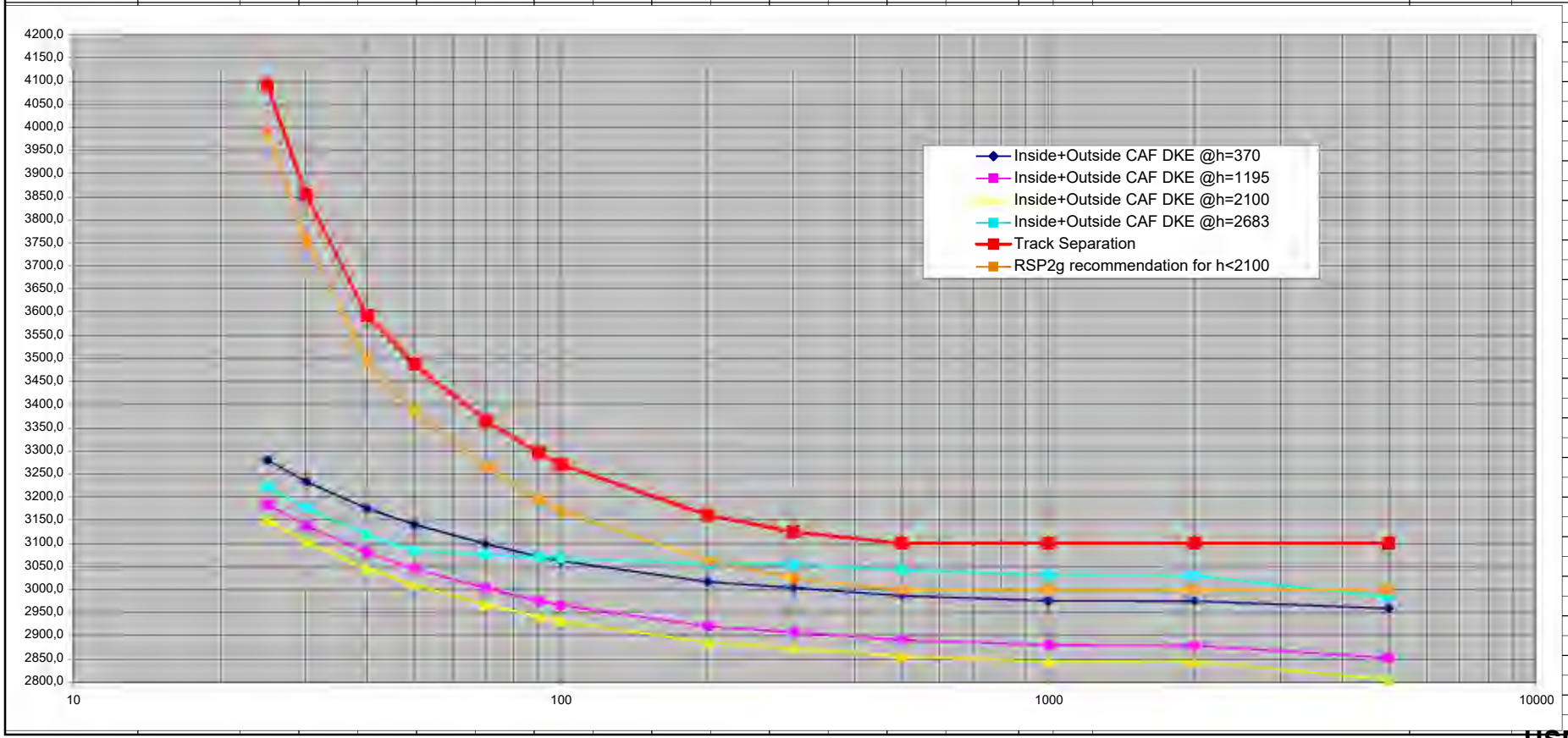

Track with centre poles

Outside from one tram + inside from the other crossing tram, according to CAF DKE 20.02.2008 27/02/2008

Comparison with Track Separation as per Cross Section 6 of ULE90130-SW-DRG-00032 Rev 6

		Curve Radius												Straight			
	height	**25**	**30**	**40**	**50**	**70**	**90**	**100**	**200**	**300**	**500**	**1000**	**2000**	**5000**			
door sill	**370**	3280,6	3234,1	3176,0	3141,1	3099,2	3072,1	3062,3	3016,8	3003,8	2987,2	2976,0	2975,2	2959,7		inside+outside CAF DKE	*RSPG ask for 600mm gap*
		1309,4	1118,9	917,0	845,9	766,8	723,9	708,7	645,2	621,2	612,8	624,0	624,8	640,3	gap	=Track Separation - (inside+outside CAF)	*for heights below 2100*
	1195	3184,6	3138,1	3080,0	3045,2	3003,2	2976,2	2966,3	2920,9	2907,8	2891,2	2880,1	2879,3	2852,7		inside+outside CAF DKE	
		1405,4	1214,9	1013,0	941,8	862,8	819,8	804,7	741,1	717,2	708,8	719,9	720,7	747,3	gap	=Track Separation - (inside+outside CAF)	
	2100	3149,9	3103,4	3045,4	3010,5	2968,5	2941,5	2931,6	2886,2	2873,2	2856,6	2845,4	2844,6	2805,9		inside+outside CAF DKE	
		1440,1	1249,6	1047,6	976,5	897,5	854,5	839,4	775,8	751,8	743,4	754,6	755,4	794,1	gap	=Track Separation - (inside+outside CAF)	
rear view camera	**2683**	3223,4	3177,0	3118,9	3084,0	3076,1	3070,5	3068,1	3056,2	3054,6	3042,6	3031,4	3030,6	2984,1		inside+outside CAF DKE	*RSPG allows less than 600mm*
		1366,6	1176,0	974,1	903,0	789,9	725,5	702,9	605,8	570,4	557,4	568,6	569,4	615,9	gap	=Track Separation - (inside+outside CAF)	*for heights above 2100*
	full height	3990	3753	3493	3387	3266	3196	3171	3062	3025	2994	2972	2962	2950		inside+outside Cross Sections DKE	
		600	600	600	600	600	600	600	600	600	106	128	138	150		Track Separation - (inside+outside Cross Sections DKE)	
		4590	4353	4093	3987	3866	3796	3771	3662	3625	3600	3600	3600	3600		Track separation	
		3990	3753	3493	3387	3266	3196	3171	3062	3025	3000	3000	3000	3000		Track separation - 600mm	RSP2g recommendation for h<2100
		Curves of Raidus < 350m									Curves of Radius R>350m						

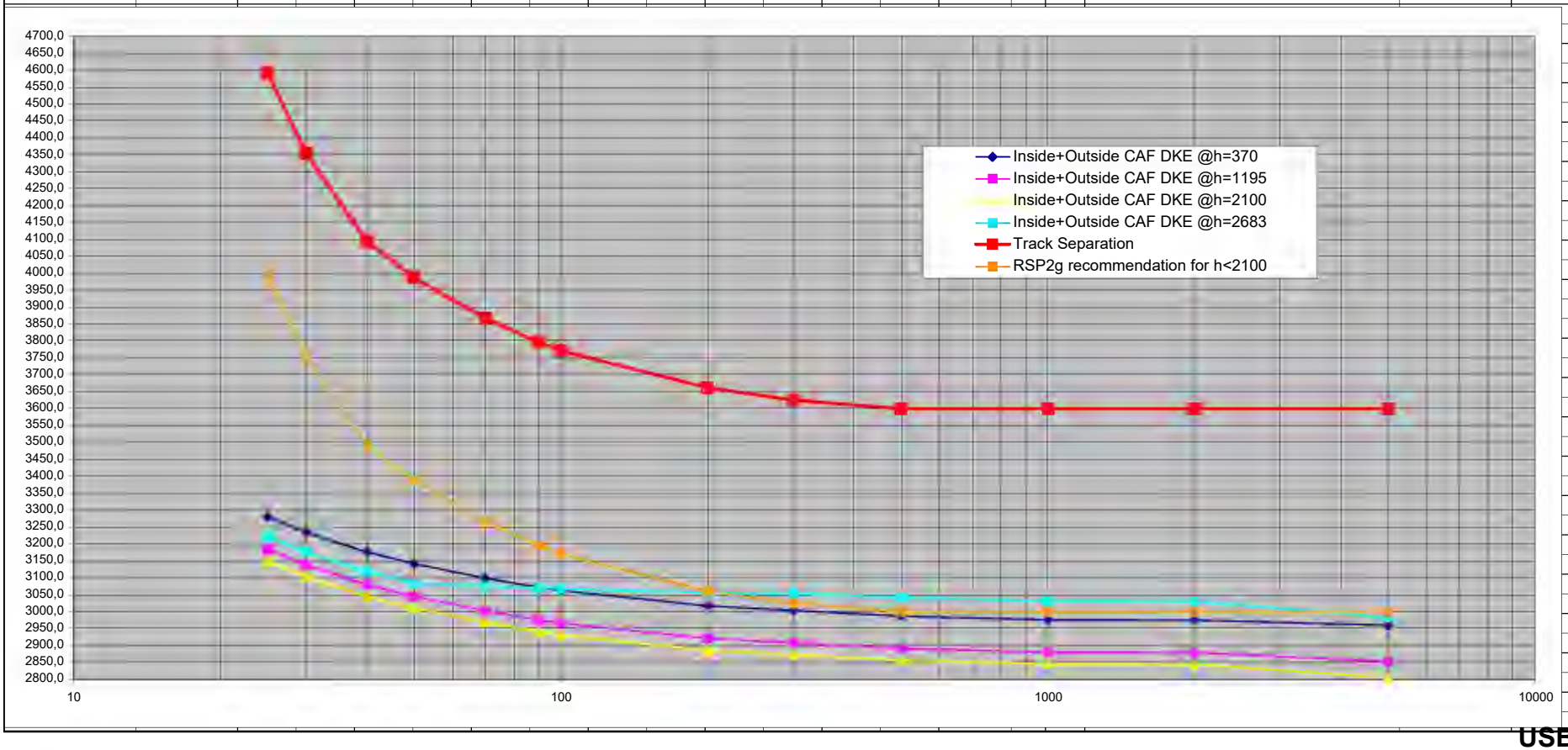

Track Construction and Maintenance Tolerances for use in Calculation of DKE for Initial Comparison Purposes.

Introduction

This document indicates values of combined track Construction and Maintenance tolerances to be assumed in the derivation of DKE dimensions.

These dimensions necessarily combine both construction and maintenance limits and are provided by SDS solely to facilitate the initial calculation of DKE by Tramcos and to ensure a common basis for comparison, evaluation and design. Both construction and maintenance limits are ultimately the responsibility of the Infraco and so final values will be established by them on appointment. The values given here reflect the SDS view of likely values.

Construction tolerances are also listed for information but it is the combined construction and maintenance limits which are relevant to the calculation of the DKE. These values are primarily related to plain line and are for calculation of DKE Only.

Criterion	**Slab Track** (including embedded grooved Rail)		**Ballasted Track**		**Comments**
	Construction & Maintenance	Construction	**Construction & Maintenance**	Construction	
Gauge (from 1435mm) Relative Variation	+10mm to –0mm 1:500	+2mm to -0mm 1:1000	+10mm to –0mm 1:500	+2mm to -0mm 1:1000	Including for max 5mm rail sidewear.
Horizontal Alignment Relative Variation	+/- 15mm 1:500	+/- 5mm 1:1000	+/- 35mm 1:500	+/- 5mm 1:1000	Horizontal Alignment tolerance **incorporates** movement of the tram centreline due to maximum rail sidewear (5mm).
Vertical Alignment Relative Variation	+5mm to -15mm 1:500	+/- 5mm 1:1000	+/- 35mm 1:500	+/- 5mm 1:1000	**Including** for effect on rail level of max headwear (5mm)
Cross Level Error Variation from Design Cant Gradient	+/- 3mm 1:750	+/- 2mm 1:1000	+/- 5mm 1:750	+/- 2mm 1:1000	5mm cross level error could equate to 10mm error over bogie centres which the Track Alignment Criteria assumed to be at 10m spacing. Cross level error includes for differential headwear between rails 1:750 equates to difference between 1:300 max design twist and 1:250 assumed project tram capability. **Tramcos need to agree to these values.**
Short wave twist (ie measured over wheel centres)	1:250	1:400	1:250	1:400	Short wave twist principally a Maintenance issue but also a factor where the combinations of horizontal and vertical geometry induce twist. **Tramcos need to confirm this value is acceptable to their tram** Design attempts to limit short wave twist due to combinations of H & V geometry to 1:400 over 1.8m

Note: The Design Criteria attempts to limit twist due to cant gradient and/or combinations of horizontal and vertical geometry to 1:300 (long wave) 1:400 (short wave) (exceptional design limits). Tramcos should examine the track alignment design in relation to their own vehicle configuration to **confirm** their vehicle can negotiate the alignment. Attention is drawn to the section of the route between Princes Street and York Place. In particular, between North St Andrew Street and York Place.

Edinburgh Tram Network

Track Alignment Criteria

Doc. Ref: ULE90130-SW-SPN-00001 V2

Parsons Brinckerhoff Ltd
Edinburgh Tram Network
SDS Provider
City Point
1st Floor
65 Haymarket Terrace
Edinburgh, EH12 5HD

Telephone: 44(0) 131 623 8600
Facsimile: 44(0) 131 623 8601
Email: edinburghtram@pbworld.com

23 February 2007

AUTHORISATION PAGE

Title: Track Alignment Criteria				
Approvals	**Name**	**Position**	**Signed**	**Date**
Author	D Tyson	Track Technical Advisor		21/02/07
Reviewer	A Jory	Track Design Team Leader		21/02/07
Approver	S Reynolds	Project Director		

Revision History

Ver No	**Date**	**Description**	**Prepared By**
1	16 Mar 06	Draft Issue to **tie** Requiring Further Development	D J Tyson
2	23 Feb 07	Revisions following comments and internal review	D J Tyson

Distribution

Ver No	**Date**	**Name**	**Role**	**Company**
1	16 Mar 06	Willie Fraser	Contract Representative	**tie**
2	23 Feb 07	Ailsa McGregor	Contract Representative	**tie**

CONTENTS

1.....INTRODUCTION **4**

2.....PURPOSE **4**

3.....SCOPE **4**

4.....DERIVATION OF TRACK ALIGNMENT CRITERIA **4**

5.....TRACK ALIGNMENT CRITERIA **5**

5.1 Track Alignment Criteria 5

5.2 Format of the Track Alignment Criteria 5

5.3 Track Alignment Criteria with Commentary 5

5.4 Format of commentary 5

6.....FUTURE REVIEW AND FURTHER DEVELOPMENT **6**

APPENDIX A TRACK ALIGNMENT CRITERIA **7**

APPENDIX B TRACK ALIGNMENT CRITERIA WITH COMMENTARY **12**

1 INTRODUCTION

Intrinsic to any tram system is a satisfactory interface between the track, specifically the rails, and the tram, specifically its wheels and axles. Essential to this interface is a compatible fit between the geometry of the track and the operational constraints of the tram. Without an approved, evaluated and thoroughly considered interface, the use, safety and operational reliability of the system will be compromised.

2 PURPOSE

The purpose of this report is to define the geometric data upon which the track will be designed and incorporated into the infrastructure. These geometric requirements will have a direct influence on the operational characteristics of the tram.

The report is very likely to require review and further consideration once the tram vehicle supplier and the infrastructure contractor are appointed.

This report does not consider, as a matter of analysis and dimensional evaluation, aspects concerning rail / wheel interface. A separate report evaluates this interface but does, clearly, call upon information contained in this document.

3 SCOPE

This report applies to all tracks in the Edinburgh Tram Network, including, for the avoidance of doubt, the tracks in the depot.

4 DERIVATION OF TRACK ALIGNMENT CRITERIA

The track alignment criteria have been derived from the following:

- reference to criteria for similar tramways and adaptation of these to the Edinburgh Tram Network, specifically with regard to **tie**'s requirements and assumed characteristics of the tram vehicle (see 6 Future Review and Further Development);
- reference to 'Transport Cooperative Research Program Report 57 Track Design Handbook for Light Rail Transit' by Parsons Brinckerhoff Quade & Douglas Inc;
- reference to 'Modern Railway Track' 2nd edition, by C Esveld;
- reference to Railway Safety Publication 2 - Guidance on Tramways, pub Office of Rail Regulation;
- reference to 'Inclusive Mobility' by P R Oxley, pub DfT (application of the Disability Discrimination Act (Amendment) Regulations 2003);

- reference to 'Business Process Document Track Design Handbook' by Network Rail (ref NR/SP/TRK/0049, Issue 9, June 2006).

5 TRACK ALIGNMENT CRITERIA

5.1 Track Alignment Criteria

The Track Alignment criteria are in Appendix A.

5.2 Format of the Track Alignment Criteria

For each parameter of the track alignment there are three criteria as follows:

- Desirable (all endeavour must be made in the design to comply with this criterion);
- Limiting (the Desirable criterion may be exceeded on a case by case basis, up to this maximum, provided there is a net benefit to the Edinburgh Tram Network, due consideration being given to any adverse effect of exceeding the Desirable criterion);
- Exceptional (the Desirable and Limiting criteria may only be exceeded in exceptional cases, up to this maximum, when circumstances and conditions (eg geographical constraints) dictate that this design is unavoidable, provided all risks associated with the effects of exceeding the Desirable and Limiting criteria are assessed, measures to mitigate against adverse effects are implemented, and the residual risks are acceptable).

The exceptional criteria must not be exceeded under any circumstances.

5.3 Track Alignment Criteria with Commentary

A version of the Track Alignment Criteria, annotated with a commentary, is in Appendix B.

5.4 Format of commentary

The commentary comprises three parts as follows:

- notes (in black text);
- additional notes including derivation of criterion where appropriate (in blue text);
- items requiring further clarification, possible future review and further development (see 6 Future Review and Further Development) (in red text).

6 FUTURE REVIEW AND FURTHER DEVELOPMENT

Attention is drawn to those criteria which are very likely to require clarification, review and further development following appointment of the tram vehicle supplier (TramCo) and at such a stage or stages in the Edinburgh Tram Project when it is deemed that sufficient information about the tram vehicle is available. These particular criteria are highlighted in the Track Alignment Criteria with Commentary in Appendix B, where the specific areas for future review and further development are included in the commentary.

Particular attention is drawn to the need for the following in respect of the combination of horizontal and vertical curves (and the effective cant gradients) at the junction between North St Andrew Street and York Place and the criteria upon which these curves have been designed:

- a clear and unambiguous demonstration by the appointed tram vehicle supplier that the criteria, resulting restricting alignment and the impact of these on the tram vehicle design have been fully understood by the tram vehicle supplier;
- a clear and unambiguous demonstration by the appointed tram vehicle supplier that the tram vehicle is capable of negotiating the track alignment in this critical location for both the design and operating conditions, allowing for all tram and infrastructure tolerances and wear in construction and in service.

APPENDIX A Track Alignment Criteria

APPENDIX A TRACK ALIGNMENT CRITERIA

		Key	unit	50	80	20
01		Speed assumptions and normal limitations				
	.01	Speed - Shared running - maximum	kph	50	50	50
	.02	Speed - Segregated running – maximum	kph	80	80	80
	.03	Speed - Depot - maximum	kph	15	15	20
02		Geometric element				
	.01	Minimum length	m	15	12	6
03		Horizontal Curves				
	.01	Note				
	.02	Horizontal radius - Minimum - Running lines - Slab track	m	50	30	25
	.03	Horizontal radius - Minimum - Depot lines	m	50	40	25
	.04	Horizontal radius curves - Distance between curves of opposite flexure	m	15	10	6
	.05	Horizontal radius curves - Distance between curves of opposite flexure	m	10	6	0
	.06	Horizontal radius curves - Distance between curves of opposite flexure. Turnouts - theoretical tangent points at switch toe to next tangent pt (of opposite flexure)	m	10	8	6
	.07	Horizontal radius curves - Distance between curves of similar flexure formed by a curve and a turnout - theoretical tangent point at switch toe to tangent point of a curve of similar flexure	m	5	3	2
	.08	Horizontal radius curves – At Tramstops	m	Infinity	2000	1000
04		Cant - maximum cant values				
	.01	Cant – Platforms	mm	0	0	0
	.02	Cant - Tangent track	mm	0	15	15
	.03	Cant - Fixed Obtuse crossings	mm	0	0	15
	.04	Cant – Curves	mm	75	75	100
	.05	Cant - Plain line track – depot	mm	0	0	15
05		Negative cant				
	.01	Note				
	.02	Negative cant - Plain line	mm	0	15	15
	.03	Negative cant – Turnouts	mm	0	0	15
	.04	Negative cant – Turnouts	mm	0	0	15
	.05	Negative cant – Turnouts	mm	0	0	0
06		Cant excess				
	.01	Note				
	.02	Cant excess	mm	0	25	50
07		Cant deficiency				
	.01	Note				
	.02	Cant deficiency - Plain line	mm	40	60	75
	.03	Cant deficiency - Plain line – Depot	mm	40	75	100
	.04	Cant deficiency - Through route of turnout	mm	0	40	60
	.05	Cant deficiency - Turnout route	mm	40	60	75
	.06	Cant deficiency - Based on theoretical radius at switch toe	mm	40	40	50
	.07	Cant deficiency - jerk - Plain line	m/s3	0.25	0.35	0.45
	.08	Cant deficiency - jerk - At switch toes	m/s3	0.3	0.4	0.5
08		Transition curves				
	.01	Note				
	.02	Transition curves - Virtual Transition	m	No use	10	10
	.03	Transition curves - Clothoid - Minimum length	m	15	10	6

09		Cant gradient				
	.01	Note				
	.02	Cant gradient - Cant gradient - Maximum permitted		RoCC	600	300
	.03	Cant gradient - Cant gradient - Minimum permitted		1500	2000	3000
	.04	Cant gradient – At switch toes		0	0	0
	.05	Cant gradient – Through turnouts, crossings and diamonds		0	0	0
10		Rates of change of cant (RoCC)				
	.01	Note				
	.02	Rates of change - cant	mm/s	35	55	68
11		Rates of change of cant deficiency (RoCCD)				
	.01	Note				
	.02	Rate of change of cant deficiency - plain line	mm/s	35	55	68
	.03	Rate of change of cant deficiency - S&C	mm/s	35	55	80
12		Cant - applied/gradient/deficiency Decision process				
	.01	Note				
	.10	Note				
	.11	Decision process - Cant	mm	75		
	.12	Decision process - Cant deficiency	mm	40		
	.13	Decision process - Cant gradient	1 in	RoCC		
	.14	Decision process - Rates of change - cant	mm/s	35		
	.15	Decision process - Rates of change - cant deficiency	mm/s	35		
	.20	Note				
	.21	Decision process - Cant	mm		75	
	.22	Decision process Cant deficiency	mm		60	
	.23	Decision process Cant gradient			600	
	.24	Decision process Rates of change - cant	mm/s		55	
	.25	Decision process Rates of change - cant deficiency	mm/s		55	
	.30	Note				
	.31	Decision process Cant	mm		75	
	.32.	Decision process Cant deficiency	mm		60	
	.33	Decision process Cant gradient	1 in			300
	.34	Decision process Rates of change - cant	mm/s		55	
	.35	Decision process Rates of change - cant deficiency	mm/s		55	
	.40	Note				
	.41	Decision process Cant	mm			100
	.42	Decision process Cant deficiency	mm		60	
	.43	Decision process Cant gradient				300
	.44	Decision process Rates of change - cant	mm/s		55	
	.45	Decision process Rates of change - cant deficiency	mm/s		55	
	.50	Note				
	.51	Decision process Cant	mm			100
	.52	Decision process Cant deficiency	mm			75
	.53	Decision process Cant gradient				300
	.54	Decision process Rates of change - cant	mm/s		55	68
	.55	Decision process Rates of change - cant deficiency	mm/s		55	68
13		Vertical alignment				
	.01	Note				
	.02	Vertical alignment – Sag	m	1000	625	500
	.03	Vertical alignment - Hog	m	1000	625	500
	.04	Vertical alignment - Vertical acceleration	% of g	2	2	4
	.05	Vertical alignment - Turnouts and diamonds	m	None	None	None
	.06	Vertical alignment - Advance sws - xng & sws	m	None	None	None

	.07	Vertical alignment - Turnouts and diamonds	m	15	10	6
	.08	Vertical alignment - Minimum curve element length	m	20	15	10
	.09	Vertical alignment - Instantaneous change in grade	%	none	0.1	0.2
	.10	Vertical alignment – Grade distance between curves of opposite flexure	m	15	10	6
	.11	Vertical alignment - Distance between opposite flexure Grade distance between vertical curves (opposite flexure)	m	15	10	0
	.12	Vertical alignment - Grade distance between vertical curves (Similar flexure)	m	None	None	None
14		Vertical geometry				
	.01	Vertical geometry – Tramstops Radius through tramstop (without exceeding gradient criteria)	m	Infinity	2000	1000
15		Gradients				
	.01	Note				
	.02	Gradients	%	5.0	6.7	8.0
	.03	Gradients Tramstops	%	1.0	2.0	2.5
	.04	Gradients Stabling Maximum	%	0.0	0.1	0.2
	.05	Gradients Turnouts and junctions	%	0.2	3.0	6.5
16		Twist (as part of the design)				
	.01	Note				
	.02	Twist (as part of the design) Long wave over length of vehicle	⁰/₀₀	1.5	2.0	3.3
	.03	Twist (as part of the design) Short wave (over bogies)	⁰/₀₀	1.2	1.8	2.5
17		Vertical / horizontal alignment combinations				
	.01	Note				
	.02	Vert / Horiz alignment - Horizontal radius – 25	m	1600	1200	1000
	.03	Vert / Horiz alignment - Horizontal radius – 30	m	1333	1000	833
	.04	Vert / Horiz alignment - Horizontal radius – 40	m	1000	750	625
	.05	Vert / Horiz alignment - Horizontal radius – 50	m	800	600	500
	.06	Vert / Horiz alignment - Horizontal radius – 60	m	667	500	n/a
	.07	Vert / Horiz alignment - Horizontal radius – 80	m	500	n/a	n/a
18		Vertical / horizontal alignment combinations Preferences				
	.01	Note				
	.02	Vert / Horiz alignment Combination preferences	m	1st		
	.03	Vert / Horiz alignment Combination preferences	m		2nd	
	.04	Vert / Horiz alignment Combination preferences	m			3rd
19		Track spacing				
	.01	Note				
	.02	Track spacing - Double track - track centres - side poles	mm	3100		
	.03	Track spacing - Double track - track centres - centre poles	mm	3600		
	.04	Track spacing - Depot tracks and sidings - track centres	mm	TBA		
	.05	Track spacing - Depot tracks and sidings - track centres - working space	mm	TBA		
20		Clearances				
	.01	Note				
	.02	Passing Clearances - Between adjacent tracks (DKE's)	mm	100		

21		Gauge				
	.01	Note				
	.02	Gauge Track gauge widening		0	0	0
	.03	Gauge Track gauge- flange-running	mm	TBA		
	.04	Gauge Check flangeway	mm	TBA		
22		Rail inclination				
	.01	Note				
	.02	Rail inclination - Inclination – None–Vertical, street grooved rail		TBA		
	.03	Rail inclination - Inclination - Non grooved rail		TBA		

APPENDIX B Track Alignment Criteria with Commentary

APPENDIX B TRACK ALIGNMENT CRITERIA – WITH COMMENTARY

		Key	unit	50	80	20	Desirable design parameter Desirable (all endeavour must be made in the design to comply with this criterion); Limiting normal design Limiting (the Desirable criterion may be exceeded on a case by case basis, up to this maximum, provided there is a net benefit to the Edinburgh Tram Network, due consideration being given to any adverse effect of exceeding the Desirable criterion) Exceptional criteria which may be subject to review Exceptional (the Desirable and Limiting criteria may only be exceeded in exceptional cases, up to this maximum, when circumstances and conditions (eg geographical constraints) dictate that this design is unavoidable, provided all risks associated with the effects of exceeding the Desirable and Limiting criteria are assessed, measures to mitigate against adverse effects are implemented, and the residual risks are acceptable). Dialogue in black qualifies the criteria Additional dialogue serves to add clarification and reasoning Areas requiring further clarification shown in red
01		Speed assumptions and normal limitations					
	.01	Speed - Shared running - maximum	kph	50	50	50	Limited by road traffic regulations and speeds
	.02	Speed - Segregated running – maximum	kph	80	80	80	A maximum speed has been specified by tie – (Schedule 16 System-wide Non-Functional Requirements – cl.6.2.5.2 – C8)
	.03	Speed - Depot - maximum	kph	15	15	20	Speed determined by radii of turnouts and curves within the confines of the depot
02		Geometric element					
	.01	Minimum length	m	15	12	6	Element design lengths Lengths are tied to the tram length, specifically distance between bogies Geometric length based on 12m distance between bogies (worst case scenario) Review required when vehicle data known. To be refined to suit tram
03		Horizontal Curves					
	.01	Note					Minimum requirements for horizontal curves including distances between similar and opposite flexure. Similar requirements also for horizontal curvature up to turnouts and through tramstops
	.02	Horizontal radius - Minimum - Running lines - Slab track	m	50	30	25	Slab track offers greater stability
	.03	Horizontal radius - Minimum - Depot lines	m	50	40	25	Vehicle negotiability, track stability and wear important Exceptional criteria raised to 25m (from 20m) at tie's request Considered minimums dependent upon tram data To be refined to suit tram

.04	Horizontal radius curves - Distance between curves of opposite flexure	m	15	10	6	Radii dependent - no transition curves The sharpness of the curves of opposite flexure (and hence the offset to the tangent line) has direct impact on the length of tangent (straight) track between the curves. Geometric length based on 12m distance between bogies although 10m seen as being appropriate being the approximate length between 'inside' axles of the adjacent bogies. Considered minimums dependent upon tram data To be refined to suit tram
.05	Horizontal radius curves - Distance between curves of opposite flexure	m	10	6	0	With transitions on adjacent opposite flexure curves (with some verification on sharp curves) Exceptional to be considered individually (also refer wheelbase) Rates of change of cant and cant deficiency must match on opposite curves. Direct reverses with pure horizontal curves should be avoided, but large radii may be acceptable as an exception.
.06	Horizontal radius curves - Distance between curves of opposite flexure. Turnouts - theoretical tangent points at switch toe to next tangent pt (of opposite flexure)	m	10	8	6	It is established that it is a good practice to provide a section of tangent track between curves of opposite flexure. The amount of such track is very much dependent upon the wheelbase and behaviour of the vehicles using the track. The wheelbase does, therefore, contribute to the definition of this criterion. The ideal situation would be to enable the whole length of the longest component of the vehicle to be placed on tangent track between reversing curves. Equally, it is obviously good practice to place the vehicle on tangent track geometry prior to entry to the switch area of the turnout - the vehicles attitude is, as a consequence, correctly aligned and stable. Excessive lateral jerk is avoided (passenger comfort) and derailment risk (considering bogie centres) is reduced. Considered minima partially dependent upon tram data
.07	Horizontal radius curves - Distance between curves of similar flexure formed by a curve and a turnout - theoretical tangent point at switch toe to tangent point of a curve of similar flexure	m	5	3	2	Wheelbase does, to some extent, define this criterion. However, it is good practice to place the vehicle on tangent track prior to entry to the switch area of the turnout. It is not so obvious that this could be a requirement and as such cause a problem especially considering that the curves are of similar flexure (as opposed to opposite flexure). However, placing a curve tangent point close to the switch toe can lead to derailment depending upon the manufacturing geometry of the turnout. The intention here is to ensure that the bogie (over the two axles) is placed on tangent track immediately prior to entry to the switches of the turnout. If the switches are manufactured with a theoretical tangent point outside the lead of the turnout, and if a similar flexure curve encroaches on to this point, derailment could occur. Considered minimums dependent upon tram data (bogie axle ctrs)

	.08	Horizontal radius curves – At Tramstops	m	Infinity	2000	1000	The absolute minimum in accordance with tie's requirements (Schedule 16 System-wide Non-Functional Requirements – cl.6.2.5.1 – C8), is infinity, ie straight track, for all conditions. The desirable criterion herein conforms to the above tie requirement, however, where prevailing conditions, alignment requirements and other restraints dictate that some degree of curvature (horizontal and vertical) will be essential. The criteria defined are considered appropriate for such situations and will be avoided if at all possible. Taking the mid ground (1500m radius) the versine on a typical vehicle of 10 meters in length would equate to 8 mm which should be within design, installation and maintenance tolerances for stepping distances. A case by case study will be undertaken should this criterion be deemed necessary. Reference to door positions on the Tram will also be considered. Not likely to be re-considered despite un-confirmed tram data although review will be undertaken when vehicle known.
04		Cant - maximum cant values					
	.01	Cant – Platforms	mm	0	0	0	Cant can be applied to curves at tramstop platforms but, considering that all trams would normally stop (i.e. no through running) it would be preferable that none is installed from a point of view of passenger access and comfort
	.02	Cant - Tangent track	mm	0	15	15	In order to facilitate drainage and overcome geometric problems adjacent to tangent track
	.03	Cant - Fixed Obtuse crossings	mm	0	0	15	In order to overcome geometric problems adjacent to the obtuse crossings. Obtuse crossings should be laid without cross-fall considering the difficulties of checking the obtuse crossing.
	.04	Cant – Curves	mm	75	75	100	Cant application As part of the assessment of determining cant values, due regard has to be paid to type of vehicle and the passengers using the system. Trams operate at relatively slow speeds with sharp radius curves. The calculation to establish the track's geometric speed capabilities relates directly to the applied cant and consequential cant deficiency. Given that the curve radii can be small, minor variations in the tram's speed could significantly alter the effectiveness (positively or otherwise) of an applied cant with equally disturbing effects on cant deficiency. Bearing in mind the above, cant is kept to a lower threshold (with obvious implications on the speed) which also recognises the comfort and safety of a high percentage of standing passengers. Trams operating in a street environment would be subject to slowing and speed changes as a result of other traffic sharing the route, prohibiting the application of high cant values on grounds of comfort factors associated with slow running. High cant values would also be unacceptable from a point view of highway construction and usage. However, notwithstanding the above, there could be occasions where speeds could be predicted to have some consistency, for example on long segregated sections which may also be on former railway alignments. High cants would then be permissible in these situations, provided that they are acceptable to the vehicle. Exceeding the exceptional criteria value (100mm) in conjunction with the above would be subject to special review and would be directly related to the capabilities of the vehicle for which data is still not confirmed.

	.05	Cant - Plain line track – depot	mm	0	0	15	Exceptional value of cant to be applied only to provide a nominal application on long suitable sections of track. Cant would be installed on cant gradients placed centrally about the tangent point of the curve.
05		Negative cant					
	.01	Note					Maximum allowable values which are particularly important with regard to turnouts and obtuse crossings
	.02	Negative cant - Plain line	mm	0	15	15	Criteria which may be un-avoidable Normally considered as to be avoided. The main use of negative cant would be to provide some cross-fall for drainage purposes.
	.03	Negative cant – Turnouts	mm	0	0	15	Only on the turnout route Criteria which may be un-avoidable Where turnouts are installed in situations where they are on a grade (specifically a down grade when viewed from the switch toe) negative cant is generated on the turnout route when the grade follows the straight route of the turnout. Steeper grades and sharper turnout curves will produce higher values of negative cant.
	.04	Negative cant – Turnouts	mm	0	0	15	Elsewhere within the turnouts and diamonds Criteria which may be un-avoidable Normally considered as to be avoided. The main use of negative cant would be to provide some cross-fall for drainage purposes
	.05	Negative cant – Turnouts	mm	0	0	0	Obtuse crossings Despite any geometric problems adjacent to the obtuse crossings, negative cant is not permitted. Due to the difficulties of checking the obtuse crossing, and consequential derailment risk, there cannot be any relaxation on this criterion.
06		Cant excess					
	.01	Note					Normally applied where slow speed running may be encountered, but does have some bearing in this concept
	.02	Cant excess	mm	0	25	50	Areas where high cant values have been installed, slow speed running (or even un-scheduled stopping) will require assessment. Values prevent un-necessary passenger discomfort and will, to some extent, have an impact on mitigating excessive low rail head wear. Normally associated with heavy rail systems. The criteria also controls the application of high cant values where compound curves exist and cant application remains the same for both curves thus easing construction by avoiding cant transitions (ramping up or down).

07		Cant deficiency					
	.01	Note					Acceptable criteria As part of the assessment of determining cant deficiency values, due regard has to be paid to type of vehicle and the passengers using the system. Trams operate at relatively slow speeds with sharp radius curves. The calculation to establish the track's geometric speed capabilities relates directly to the applied cant and consequential cant deficiency. Given that the curve radii can be small, minor variations in the tram's speed could significantly alter the actual values of cant deficiency with potentially serious effects on passenger comfort and safety. Bearing in mind the above, cant deficiency is kept to a sensible threshold (with obvious implications on the speed) recognising the comfort and safety of the passengers and also noting a high percentage of standing passengers. Allied to the above and with reference to minor speed variations (increases), keeping cant deficiency values lower affords headroom between acceptable running (cant deficiency value) and one which would have a negative impact on tram operation and passenger comfort. Capabilities of the vehicle still to be confirmed.
	.02	Cant deficiency - Plain line	mm	40	60	75	Considered appropriate. Value reflects consideration to the greater percentage of standing passengers compared with the number normally seated in heavy rail situations which operate with higher cant deficiency recommendations. Notwithstanding the above, consideration must be given to over-speed situations as defined in 07.01 above recognising also the passenger's perceive expectations for ride quality in this type of transportation system. Review required to assess any impact on tram
	.03	Cant deficiency - Plain line – Depot	mm	40	75	100	Considered appropriate. Review required to assess any impact on tram
	.04	Cant deficiency - Through route of turnout	mm	0	40	60	Considered appropriate. Should it be necessary to design turnouts with a curved through route, cant deficiency values should be reduced because of the greater occurrence of rail discontinuities. Review required to assess any impact on tram
	.05	Cant deficiency - Turnout route	mm	40	60	75	Considered appropriate. Being no applied cant, cant deficiency through the turnout curved route will require consideration in order to set the operating speed Review required to assess any impact on tram

	.06	Cant deficiency - Based on theoretical radius at switch toe	mm	40	40	50	Cant deficiency measured at switch toe The theoretical cant deficiency at this point is calculated by using an effective radius which is formed by placing a chord (actually the smallest wheelbase of the tram) symmetrically about the switch toe. The switch tongue rail design, and its associated geometry, will define the versine (and therefore, effective radius) produced by such a chord, the length of which is also dependent upon the tram's wheelbase dimensions. This criterion therefore makes due allowance for non-tangental switch tips. As an example, with a switch tongue design that also has a coincidental tangent point at the toe, the effective radius (on which cant deficiency is calculated) doubles from that of the switch radius. Review required once detailed turnout (particularly switch) designs are established. Review required to assess any impact on tram Shortest wheelbase data requires confirmation.
	.07	Cant deficiency - jerk - Plain line	m/s3	0.25	0.35	0.45	Jerk rate Relates to comfort and safety effects of the length of time taken to acquire acceleration forces as a result of the geometry change and the shortest wheel-base. Exceptional values slightly in excess of tie's requirements – (Schedule 16 System-wide Non-Functional Requirements – cl.6.2.5.2 – C6) – but rates of change of cant deficiency [11.01; 11.02] will rule, these accelerations relating, approximately and somewhat conservatively, to a vehicle with a wheelbase of 7.5 metres. Depending upon the wheelbase (or axle configurations) exceptional criterion should never be reached. Review required to assess any impact on tram Must consider impact of shortest wheelbase (which requires confirmation)
	.08	Cant deficiency - jerk - At switch toes	m/s3	0.3	0.4	0.5	Maximum permitted jerk rate at switch toes. As 07.07 above but slightly increased to reflect values at switch toe. Consider shortest wheelbase. Comfort and safety effects of the length of time taken to acquire acceleration forces evident at switch toe. Review required to assess any impact on tram Must consider impact of shortest wheelbase (which requires confirmation)
08		Transition curves					
	.01	Note					Dimensional requirements with some relationship to the tram dimensions.
	.02	Transition curves - Virtual Transition	m	No use	10	10	Length basis. Where no transition curve is provided, speed calculation and vehicle negotiability is base on the principle of virtual transition. The vehicle will form it own transition curve over the geometry change with a length equal to the distance between bogies (or wheelbase) - the virtual transition. 10m used (worst case scenario) for tram wheelbase assuming conventional bogied stock. The use of the virtual transition should normally be avoided. Virtual transition is directly related to the vehicle – confirmation required

	.03	Transition curves - Clothoid - Minimum length	m	15	10	6	Transition curve minimum lengths. Clothoid spirals preferred for the sharper radii curves associated with tram systems. Judgement required assessing effectiveness of transition curve length when related to curve radii and hence actual lateral shift. Application of cant control by transition length and consequential cant gradient.
09		Cant gradient					
	.01	Note					Permitted maximums. The way in which cant is applied to the track. These parameters effectively define twist. (dealt with later). Consultation with tram supplier essential
	.02	Cant gradient - Cant gradient - Maximum permitted		RoCC	600	300	Exceptional parameter to be avoided if at all possible. The maximum gradient is controlled by the vehicle characteristics and its capability to negotiate the twist created by cant gradient. Sometimes referred to as bogie equalisation, this is the change in wheel loading that occurs when one wheel moves above or below the plane of the other three wheels on a two-axle bogie. If a wheel unloads significantly, it may climb the rail and lead to derailment. Therefore, the expected track vertical surface alignment has to be wholly compatible with the tram's bogie capabilities. Rate of change of cant (RoCC) may overwrite these criteria. Essential review required with tram supplier.
	.03	Cant gradient - Cant gradient - Minimum permitted		1500	2000	3000	Minimum gradients Cant gradients can be difficult to construct, especially on ballasted track, when grades are very flat.
	.04	Cant gradient – At switch toes		0	0	0	None permitted Severe risk of derailment should gradients occur over the switches. Operation of the switches would be impaired.
	.05	Cant gradient – Through turnouts, crossings and diamonds		0	0	0	None permitted Severe risk of derailment should gradients occur in this region. Construction would also be virtually impossible.
10		Rates of change of cant (RoCC)					
	.01	Note					Rates of change in lateral acceleration Criterion defined using norms that are well proven and established by other organisations – for example, reference Network Rail and, Modern Railway Track by C Esdvelt. The exceptional criterion is less than that found on heavy rail systems reflecting the comfort and safety of the passengers, noting a high percentage of standing passengers and acknowledging that, with sharp curves and slow speeds, minor variations in speed could have significant impact. Review required to assess any impact on tram
	.02	Rates of change - cant	mm/s	35	55	68	Considered acceptable

11		Rates of change of cant deficiency (RoCCD)					
	.01	Note					Rates of change in lateral acceleration Criterion defined using norms that are well proven and established by other organisations - for example, reference Network Rail and, Modern Railway Track by C Esdvelt. The exceptional criterion is less than that found on heavy rail systems reflecting the comfort and safety of the passengers, noting a high percentage of standing passengers and acknowledging that, with sharp curves and slow speeds, minor variations in speed could have significant impact. Review required to assess any impact on tram
	.02	Rate of change of cant deficiency - plain line	mm/s	35	55	68	Considered acceptable
	.03	Rate of change of cant deficiency - S&C	mm/s	35	55	80	Considered acceptable Higher value considered reasonable given the stability of the turnout and the perceived acceptability of the ride through these areas.
12		Cant - applied/gradient/deficiency Decision process					
	.01	Note					Preferred, acceptable, limiting and exceptional criteria and the designer's decision process
							1st choice - Preferred
	.10	Note					The obvious preferred choice
	.11	Decision process - Cant	mm	75			
	.12	Decision process - Cant deficiency	mm	40			
	.13	Decision process - Cant gradient	1 in	RoCC			
	.14	Decision process - Rates of change - cant	mm/s	35			
	.15	Decision process - Rates of change - cant deficiency	mm/s	35			
	.20	Note					2nd choice - Acceptable Acceptable but ordinarily limiting. Passenger comfort still acceptable
	.21	Decision process - Cant	mm		75		
	.22	Decision process Cant deficiency	mm		60		
	.23	Decision process Cant gradient			600		
	.24	Decision process Rates of change - cant	mm/s		55		
	.25	Decision process Rates of change - cant deficiency	mm/s		55		
	.30	Note					3rd choice - Tolerable Acceptable but passenger comfort and vehicle attitude affected
	.31	Decision process Cant	mm		75		
	.32.	Decision process Cant deficiency	mm		60		
	.33	Decision process Cant gradient	1 in			300	1:300 cant gradients are normally to be avoided so as not to encroach on vehicle twist characteristics and passenger comfort. Passenger comfort affected Vehicle capabilities have to be understood
	.34	Decision process Rates of change - cant	mm/s		55		

	.35	Decision process Rates of change - cant deficiency	mm/s	55		
	.40	Note				4th choice - To be used in exceptional circumstances Maximum cant application has to be considered in conjunction with location, trackform and the application of cant deficiency. The speed (civil limiting speed) calculation has to give headroom for over-speed risks etc.
	.41	Decision process Cant	mm		100	Maximum cant has to be considered in conjunction with cant deficiency.
	.42	Decision process Cant deficiency	mm	60		
	.43	Decision process Cant gradient			300	Passenger comfort affected Vehicle capabilities have to be understood
	.44	Decision process Rates of change - cant	mm/s	55		
	.45	Decision process Rates of change - cant deficiency	mm/s	55		
	.50	Note				5th choice - To be used in exceptional circumstances – following review Passenger comfort definitely affected in certain combinations of criteria. Non-ballasted tracks only Maximum cant application has to be considered in conjunction with location, trackform and the application of cant deficiency. The speed (civil limiting speed) calculation has to give headroom for over-speed risks etc.
	.51	Decision process Cant	mm		100	Maximum cant has to be considered in conjunction with cant deficiency.
	.52	Decision process Cant deficiency	mm		75	Cant deficiency raised to maximum as a last resort.
	.53	Decision process Cant gradient			300	Passenger comfort affected Vehicle capabilities have to be understood
	.54	Decision process Rates of change - cant	mm/s	55	68	High rates of change must be considered carefully
	.55	Decision process Rates of change - cant deficiency	mm/s	55	68	High rates of change must be considered carefully
13		Vertical alignment				
	.01	Note				Accepted criteria for vertical alignment These values are in excess of tie's requirements – (Schedule 16 System-wide Non-Functional Requirements – cl.6.2.5.3 – V1,V1.1,V1.2) However, it has been established that the various vehicle manufacturers have trams that would be physically capable of negotiating the vertical curves defined below. More over, should the tie requirements for crest and dip curves be incorporated the vertical alignment on the system will be impossible. The real issue is, therefore, to ensure vertical accelerations are not unacceptable from a passenger comfort point of view. 13.02 and 13.03 define the physical criterion 13.04 defines acceleration limits Some elements require consideration from the tram supplier (when known)

.02	Vertical alignment – Sag	m	1000	625	500	Vertical curve radius – minimum It has been established that the various vehicle manufacturers have trams that would be physically capable of negotiating the vertical curves defined here. Subject to Tram
.03	Vertical alignment - Hog	m	1000	625	500	Vertical curve radius – minimum It has been established that the various vehicle manufacturers have trams that would be physically capable of negotiating the vertical curves defined here. Subject to Tram
.04	Vertical alignment - Vertical acceleration	% of g	2	2	4	Considered acceptable 2% of g calculates virtually the same radius as the square of the speed (kph) – another method of arriving at the vertical curve. 4% of g has, on Network Rail, been increased to 4.25 and 6.0%
.05	Vertical alignment - Turnouts and diamonds	m	None	None	None	Vertical curve radius Considered acceptable Severe risk of derailment should gradients occur over the switches. Operation of the switches would be impaired. Construction would also be virtually impossible.
.06	Vertical alignment - Advance sws - xng & sws	m	None	None	None	Vertical curve radius Considered acceptable Severe risk of derailment should gradients occur over the switches. Operation of the switches would be impaired. Construction would also be virtually impossible.
.07	Vertical alignment - Turnouts and diamonds	m	15	10	6	Proximity of vertical curve tangent point to switch toe and crossing In order to provide a stable approach for the tram vehicle as it enters the special trackwork.
.08	Vertical alignment - Minimum curve element length	m	20	15	10	Constructability and ride quality
.09	Vertical alignment - Instantaneous change in grade	%	none	0.1	0.2	Limiting difference in grade. Grade changes without vertical curve There are occasions where grades join at such a flat intersection angle as to make the provision of a vertical curve un-necessary. The criterion has been derived from the following: - 10m wheelbase vehicle placed over 10,000m radius curve would produce an angular change in vertical grade of 0.057 degrees which equates to 1:1000 or 0.1% - The vertical offset at the centre of this vertical curve would be approximately 1.25mm
.10	Vertical alignment – Grade distance between curves of opposite flexure	m	15	10	6	Combined average radius of 3125 or less Provided for passenger comfort, vehicle capability and constructability of the track. The exceptional value is important here. Taking a 500m radius vertical curve, a 10m wheelbase and 6m of tangent track, the tram would be negotiating 4m of curve with a vertical offset of 16mm. The offset reduces in proportion to the radius increasing. Therefore, we can reduce the amount of tangent track between reversing curves by increasing the vertical radii of the opposing curves. At 3125m radius a 10m wheelbase placed wholly on the curve will produce the same 16mm offset in vertical shift thereby permitting a zero amount of tangent track separating similar reversing curves. However, despite being able to reduce the amount of tangent track between the curves of varying magnitude by equally varying amounts, for expediency, it is decided that the 6m minimum must still apply. Review required to assess any impact on tram

	.11	Vertical alignment - Distance between opposite flexure Grade distance between vertical curves (opposite flexure)	m	15	10	0	Combined average radius greater than 3125 Provided for passenger comfort, vehicle capability and constructability of the track. As explained in 13.10 above, the offset and vertical deflection becomes insignificant at this radius and therefore, zero tangent track between reversing vertical curves of radii greater than 3125m can be permitted. Review required to assess any impact on tram
	.12	Vertical alignment - Grade distance between vertical curves (Similar flexure)	m	None	None	None	Grade section between curves of similar flexure. None required. Indeed, it is preferable that there is no such provision especially if it is very short in length.. This becomes an issue of providing sufficient grade section between the curves so as to provide a stable running section from a passenger comfort point of view.
14		Vertical geometry					
	.01	Vertical geometry – Tramstops Radius through tramstop (without exceeding gradient criteria)	m	Infinity	2000	1000	Tramstop requirements Generally has to be considered with reference to door positions on the Tram Review required to assess impact on tram
15		Gradients					
	.01	Note					Maximum gradients in various location scenarios
	.02	Gradients	%	5.0	6.7	8.0	Maximum Avoids excluding the use of a 2/3rds motored tram configuration.
	.03	Gradients Tramstops	%	1.0	2.0	2.5	Reference: "Inclusive Mobility" (published DfT) by PR Oxley in recognition of DDA Regulations
	.04	Gradients Stabling Maximum	%	0.0	0.1	0.2	Derivation is, in part, from clause 145, Guidance on Tramways – Railway Safety Publication 2 (ORR)
	.05	Gradients Turnouts and junctions	%	0.2	3.0	6.5	Dependent upon twist and negative cant Subject to satisfying other related parameters

16		Twist (as part of the design)					
	.01	Note					Twist is introduced into the track whenever cant is applied. Twist is also introduced when track is designed with zero cross-level and has a combination of horizontal and vertical curvature or vertical curvature and gradient. The twist has to be negotiated by the tram vehicle which must be capable of handling such geometry. Certain manufacturers may define these criteria in their own way, an interpretation of which is indicated below. Twist in the long wave is measured over the wheelbase (bogie centres); short wave being measured over the axle centres of the bogie. Short wave twist also leads to wheel un-loading, not, as such, defined here, although observance of the criterion should avoid the situation. Discussions with tram supplier are essential
	.02	Twist (as part of the design) Long wave over length of vehicle	‰	1.5	2.0	3.3	Project Tram geometric capability: 10m [wheelbase] @ 3mm ‰ + 10mm ->>- i.e 30+10 = 40 (or 4 ‰) Taking the formula above, the 'Project Tram' should be capable of handling 4 ‰ twists, i.e 1:250. The track alignment criteria for twist would, theoretically, produce at worst, 3.3‰ twist, i.e. 1:300. The difference between the two sets of figures, apart from providing a margin, would allow for some scope for installation and maintenance tolerances Data conjecture at the moment - 10m wheelbase Discussions with tram supplier are essential
	.03	Twist (as part of the design) Short wave (over bogies)	‰	1.2	1.8	2.5	Twist can obviously occur across the bogie. As short wave twist can lead to wheel un-loading, the desirable twist criterion is strengthened slightly – in other words short local twists must be less than overall long wave twists. Typically, a 1.8m bogie with 2. 5‰ twist may result in 4.5mm wheel un-loading. Wheel un-loading will, of course, depend on the vehicle's bogie characteristics. Data conjecture at the moment – 1.8m bogie axle centres Discussions with tram supplier are essential
17		Vertical / horizontal alignment combinations					
	.01	Note					Certain combinations of vertical and horizontal alignment can cause undesirable geometric situations, namely, twist. The tables below define, using a simple empirically derived product rule, vertical/horizontal geometry combination limitations. The table does not take into account additional twist as a result of the resultant gradient [see note 16.01]. The tram's ability to negotiate the geometry has to be considered. Additionally, based on experience, combinations in horizontal and vertical geometry also lead to difficulties and limitations in pre-curving and restraint of the rails and the construction of the track. Review/approval is required with tram supplier (when known).
	.02	Vert / Horiz alignment - Horizontal radius – 25	m	1600	1200	1000	Vertical curve radius - minimum Product rule: [Horiz.R x Vert.R] = 40k,30k, or 25k Review required to assess impact on tram

	.03	Vert / Horiz alignment - Horizontal radius – 30	m	1333	1000	833	Vertical curve radius - minimum Product rule: [Horiz.R x Vert.R] = 40k,30k, or 25k Review required to assess impact on tram
	.04	Vert / Horiz alignment - Horizontal radius – 40	m	1000	750	625	Vertical curve radius - minimum Product rule: [Horiz.R x Vert.R] = 40k,30k, or 25k Review required to assess impact on tram
	.05	Vert / Horiz alignment - Horizontal radius – 50	m	800	600	500	Vertical curve radius - minimum Product rule: [Horiz.R x Vert.R] = 40k,30k, or 25k Review required to assess impact on tram
	.06	Vert / Horiz alignment - Horizontal radius – 60	m	667	500	n/a	Vertical curve radius - minimum Product rule: [Horiz.R x Vert.R] = 40k,30k, or 25k Review required to assess impact on tram
	.07	Vert / Horiz alignment - Horizontal radius – 80	m	500	n/a	n/a	Vertical curve radius - minimum Product rule: [Horiz.R x Vert.R] = 40k,30k, or 25k Review required to assess impact on tram
18		Vertical / horizontal alignment combinations Preferences					
	.01	Note					Combinations preferences Out with the twist implications of vertical/horizontal alignment combination, from a point of view of constructability, certain combinations are preferable. These are listed accordingly.
	.02	Vert / Horiz alignment Combination preferences	m	1st			No vertical geometry within horizontal PURE curves and TRANSITION curves
	.03	Vert / Horiz alignment Combination preferences	m		2nd		No vertical geometry within horizontal TRANSITION curve
	.04	Vert / Horiz alignment Combination preferences	m			3rd	No vertical geometry CHANGES within horizontal TRANSITION curve
19		Track spacing					
	.01	Note					Requires definition following review/approval with tram supplier (when known)
	.02	Track spacing - Double track - track centres - side poles	mm	3100			Separations appropriate for tangent track and curves of radii greater than 450m Plus allowance for DKE Envelope requires review once tram data known
	.03	Track spacing - Double track - track centres - centre poles	mm	3600			Separations appropriate for tangent track and curves of radii greater than 450m Plus allowance for DKE Envelope requires review once tram data known
	.04	Track spacing - Depot tracks and sidings - track centres	mm	TBA			Plus allowance for DKE Envelope requires review once tram data known
	.05	Track spacing - Depot tracks and sidings - track centres - working space	mm	TBA			Plus allowance for DKE Envelope requires review once tram data known

20		Clearances					
	.01	Note					Requires definition following review/approval with tram supplier (when known)
	.02	Passing Clearances - Between adjacent tracks (DKE's)	mm	100			Clearance to DKE's Envelope requires review once tram data known
21		Gauge					
	.01	Note					Standard data Requires review/approval with tram supplier (when known)
	.02	Gauge Track gauge widening		0	0	0	Subject to tram requirements and Rail/Wheel Interface
	.03	Gauge Track gauge- flange-running	mm	TBA			Subject to tram requirements and Rail/Wheel Interface
	.04	Gauge Check flangeway	mm	TBA			Subject to tram requirements and Rail/Wheel Interface
22		Rail inclination					
	.01	Note					Standard data Rail sections to be defined
	.02	Rail inclination - Inclination – None–Vertical, street grooved rail		TBA			Vertical Subject Rail/Wheel Interface conclusions
	.03	Rail inclination - Inclination - Non grooved rail		TBA			Subject Rail/Wheel Interface conclusions

NOTES:
1. ALL DIMENSIONS ARE IN MILLIMETRES UNLESS OTHERWISE STATED.
2. REFER TO DRAWING ULE-90130-SW-SW-TRK-DRG-00023 LINE 1 ROUTE PLAN PROPOSED TRAMWAY CATEGORY FOR SECTION LOCATIONS.
3. THIS DRAWING IS NOT FOR CONSTRUCTION.
4. DWG HUMMINGBIRD REF: 243201
PDF REF: 24350

NOTES:
1. ONE DIMENSIONS ARE BASED ON 2.65m WIDE ASSUMED DESIGN TRAM VEHICLE AND RELATE TO STRAIGHT TRACK. THESE DIMENSIONS WILL INCREASE FOR CURVED ALIGNMENTS. REFER TO TABLES INCLUDED IN ASSUMED DESIGN TRAM VEHICLE REPORT)
2. THE TRACK SEPARATION DIMENSION IS BASED ON 2.65m WIDE ASSUMED DESIGN TRAM VEHICLE AND IS APPLICABLE TO HORIZONTAL RADII OF 150m AND ABOVE INCLUDING STRAIGHT TRACK. THIS DIMENSION WILL INCREASE FOR CURVED ALIGNMENTS REFER TO TABLES INCLUDED IN ASSUMED DESIGN TRAM VEHICLE REPORTS WITH CONSEQUENTIAL INCREASE IN THE OVERALL TRAMWAY WIDTH.
3. CLEARANCES AND DIMENSIONS INDICATED ARE MINIMUMS UNLESS OTHERWISE STATED. ALIGNMENT AND ROAD INTEGRATION CONSIDERATIONS MAY NECESSITATE THE ADOPTION OF LARGER DIMENSIONS AT SPECIFIC LOCATIONS.
4. REDUCING THE LANE WIDTH TO 3250mm (THE MINIMUM SUGGESTED BY RSPGB) WILL REDUCE THE OVERALL INTEGRATED TRAMWAY / CARRIAGEWAY WIDTH TO 7750mm AND INCREASE THE WIDTH BETWEEN THE CENTRAL LANE MARKINGS TO 850mm.
5. THE ARRANGEMENT ILLUSTRATED DOES NOT SPECIFICALLY MAKE PROVISION FOR THE TRAM TO PASS CYCLISTS. REFER TO RSPGB, PART 3, SECTION 8, CLAUSE 74.
6. THIS ARRANGEMENT IS MOST SUITABLE IN CONJUNCTION WITH CENTRAL PARTITIONING.

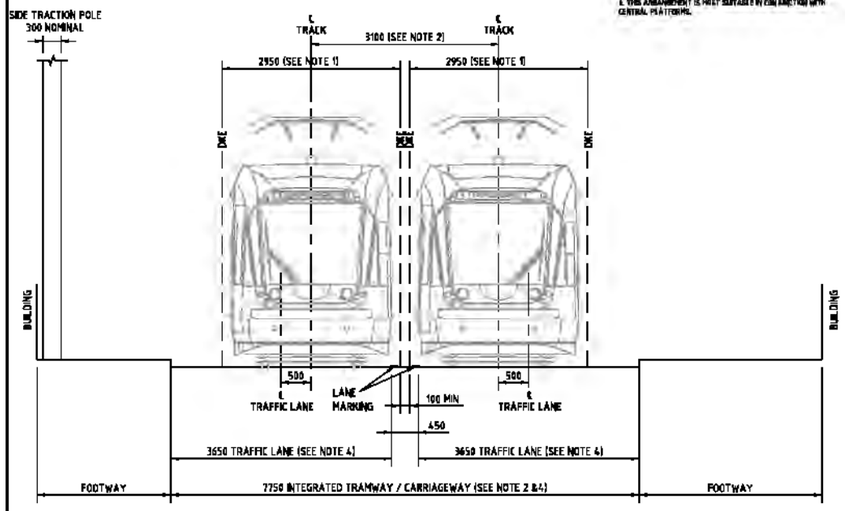

CROSS SECTION 1

INTERGRATED ON-STREET TRAMWAY
TWO LANE SHARED RUNNING TRAM CENTRE LINES OFFSET TO INSIDE OF TRAFFIC LANE CENTRE LINES.

NOTES:
1. ONE DIMENSIONS ARE BASED ON 2.65m WIDE ASSUMED DESIGN TRAM VEHICLE AND RELATE TO STRAIGHT TRACK. THESE DIMENSIONS WILL INCREASE FOR CURVED ALIGNMENTS. REFER TO TABLES INCLUDED IN ASSUMED DESIGN TRAM VEHICLE REPORT)
2. THE TRACK SEPARATION DIMENSION IS BASED ON 2.65m WIDE ASSUMED DESIGN TRAM VEHICLE AND IS APPLICABLE TO HORIZONTAL RADII OF 150m AND ABOVE INCLUDING STRAIGHT TRACK. THIS DIMENSION WILL INCREASE FOR CURVED ALIGNMENTS REFER TO TABLES INCLUDED IN ASSUMED DESIGN TRAM VEHICLE REPORTS WITH CONSEQUENTIAL INCREASE IN THE OVERALL TRAMWAY WIDTH.
3. CLEARANCES AND DIMENSIONS INDICATED ARE MINIMUMS UNLESS OTHERWISE STATED. ALIGNMENT AND ROAD INTEGRATION CONSIDERATIONS MAY NECESSITATE THE ADOPTION OF LARGER DIMENSIONS AT SPECIFIC LOCATIONS.
4. REDUCING THE LANE WIDTH TO 3250mm (THE MINIMUM SUGGESTED BY RSPGB) WILL REDUCE THE OVERALL INTEGRATED TRAMWAY / CARRIAGEWAY WIDTH TO 15050mm AND INCREASE THE WIDTH BETWEEN THE CENTRAL MARKINGS TO 850mm.

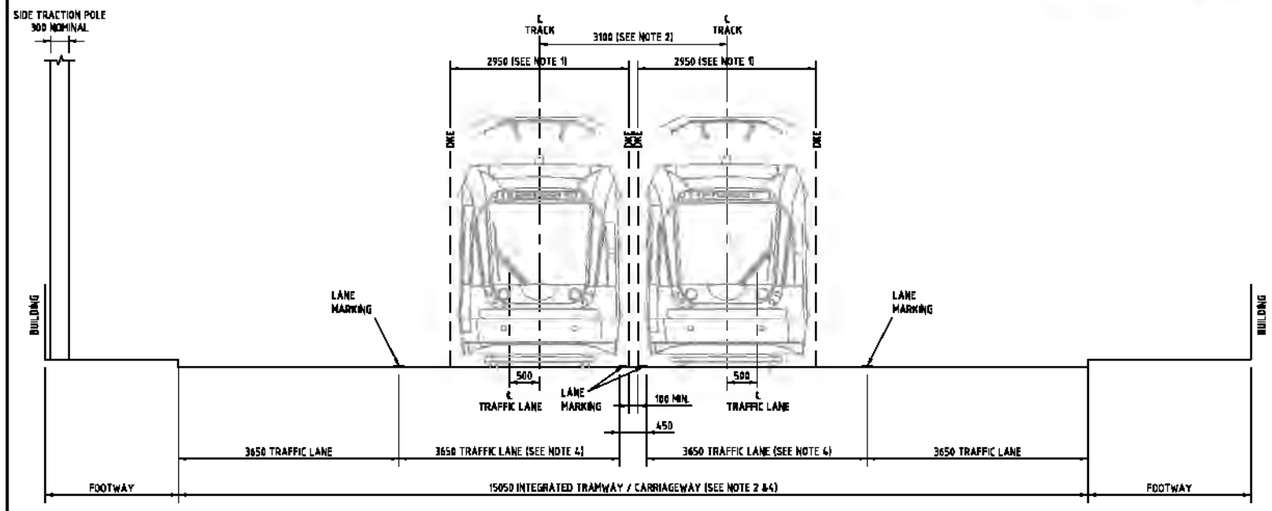

CROSS SECTION 3

INTERGRATED ON-STREET TRAMWAY
FOUR LANE SHARED RUNNING WITH TRAM IN CENTRE LANES.
TRAM CENTRE LINES OFFSET TO INSIDE OF TRAFFIC LANE CENTRE LINES.

NOTES:
1. ONE DIMENSIONS ARE BASED ON 2.65m WIDE ASSUMED DESIGN TRAM VEHICLE AND RELATE TO STRAIGHT TRACK. THESE DIMENSIONS WILL INCREASE FOR CURVED ALIGNMENTS. REFER TO TABLES INCLUDED IN ASSUMED DESIGN TRAM VEHICLE REPORT) WITH CONSEQUENTIAL INCREASE IN THE OVERALL TRAMWAY WIDTH.
2. CLEARANCES AND DIMENSIONS INDICATED ARE MINIMUMS UNLESS OTHERWISE STATED. ALIGNMENT AND ROAD INTEGRATION CONSIDERATIONS MAY NECESSITATE THE ADOPTION OF LARGER DIMENSIONS AT SPECIFIC LOCATIONS.
3. REDUCING THE LANE WIDTHS TO 3250mm (THE MINIMUM SUGGESTED BY RSPGB) WILL REDUCE THE OVERALL INTEGRATED TRAMWAY / CARRIAGEWAY WIDTH TO 14 300mm AND REDUCE THE DISTANCE BETWEEN TRACK CENTRELINES TO A MINIMUM OF 4250mm. THE WIDTH BETWEEN THE SHARED LANES AND OUTER LANES WOULD INCREASE TO 50 0mm.
4. GENERALLY THE ARRANGEMENT SHOWN ON CROSS SECTION 1 IS PREFERABLE TO THE ARRANGEMENT SHOWN IN THIS CROSS SECTION

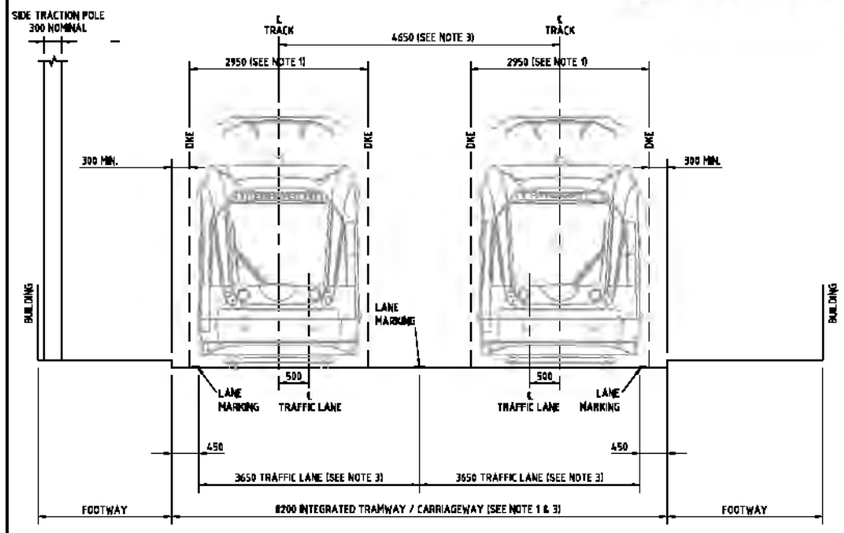

CROSS SECTION 2

INTERGRATED ON-STREET TRAMWAY
TWO LANE SHARED RUNNING. TRAM CENTRE LINES OFFSET TO OUTSIDE OF TRAFFIC LANE CENTRE LINES.

NOTES:
1. ONE DIMENSIONS ARE BASED ON 2.65m WIDE ASSUMED DESIGN TRAM VEHICLE AND RELATE TO STRAIGHT TRACK. THESE DIMENSIONS WILL INCREASE FOR CURVED ALIGNMENTS. REFER TO TABLES INCLUDED IN ASSUMED DESIGN TRAM VEHICLE REPORT) WITH CONSEQUENTIAL INCREASE IN THE OVERALL TRAMWAY WIDTH.
2. CLEARANCES AND DIMENSIONS INDICATED ARE MINIMUMS UNLESS OTHERWISE STATED. ALIGNMENT AND ROAD INTEGRATION CONSIDERATIONS MAY NECESSITATE THE ADOPTION OF LARGER DIMENSIONS AT SPECIFIC LOCATIONS.
3. REDUCING THE LANE WIDTHS TO 3250mm (THE MINIMUM SUGGESTED BY RSPGB) WILL REDUCE THE OVERALL INTEGRATED TRAMWAY / CARRIAGEWAY WIDTH TO 14 300mm AND REDUCE THE DISTANCE BETWEEN TRACK CENTRELINES TO A MINIMUM OF 4250mm. THE WIDTH BETWEEN THE SHARED LANES AND OUTER LANES WOULD INCREASE TO 50 0mm.
4. GENERALLY THE ARRANGEMENT SHOWN ON CROSS SECTION 1 IS PREFERABLE TO THE ARRANGEMENT SHOWN IN THIS CROSS SECTION

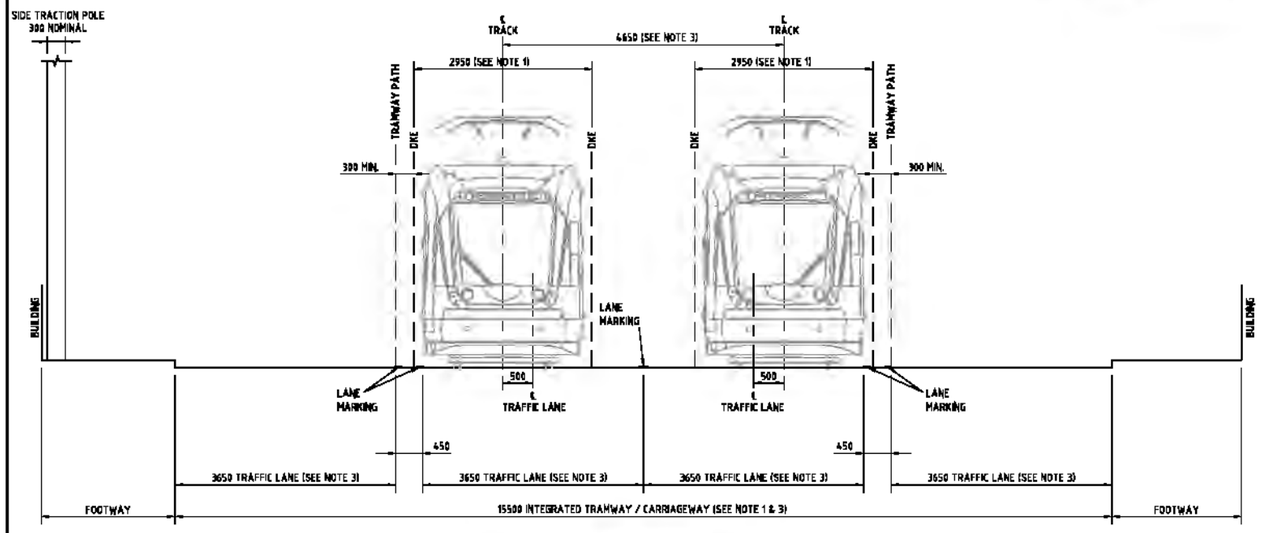

CROSS SECTION 4

INTERGRATED ON-STREET TRAMWAY
FOUR LANE SHARED RUNNING WITH TRAM IN CENTRE LANES.
TRAM CENTRE LINES OFFSET TO OUTSIDE OF TRAFFIC LANE CENTRE LINES
NB. THIS CONFIGURATION IS NOT CURRENTLY IDENTIFIED WITH ANY SPECIFIC LOCATIONS BUT MAY HAVE LIMITED APPLICATIONS AS THE DESIGN DEVELOPS.

REV.	DESCRIPTION OF REVISION	DRN.	CHKD.	APP	DATE
6	ULE POLE RELOCATED TO REAR OF PODYWAY, ISSUED FOR TENDER PURPOSES ONLY.	RAH	AJ	CM	25/09/06
5	SHEET NOW 1 OF 8	DB	NG	AJ	24/05/06
4	SHEET NOW 1 OF 5	CC	MG	AJ	03/05/06
3	INTEGRATION COMMENTS INCORPORATED	CC	MG	AJ	07/04/06
2	REVISIONS TO PRELIMINARY ISSUE	CC	MG	AJ	24/03/06
1	PRELIMINARY ISSUE FOR COMMENTS	CC	MG	AJ	23/03/06

DRAWING STATUS
For Tender Purposes Only

tie

EDINBURGH TRAM NETWORK

PB PARSONS BRINCKERHOFF

SITE
CITY POINT
65 HAYMARKET TERRACE
EDINBURGH EH12 5HD

SYSTEM WIDE
TYPICAL TRAMWAY CROSS SECTIONS
SHEET 1 OF 8

DRAWN BY COXC	CHECKED BY JORYA
APPROVED BY MASONC	ORIGINAL DRAWING SIZE A1
DATE 23/03/2006	SCALE(S) 1:50
DRAWING NUMBER ULE90130-SW-DRG-00031	REV. 6

PB INTERNAL VERSION NUMBER "F"

USB00000086_0382

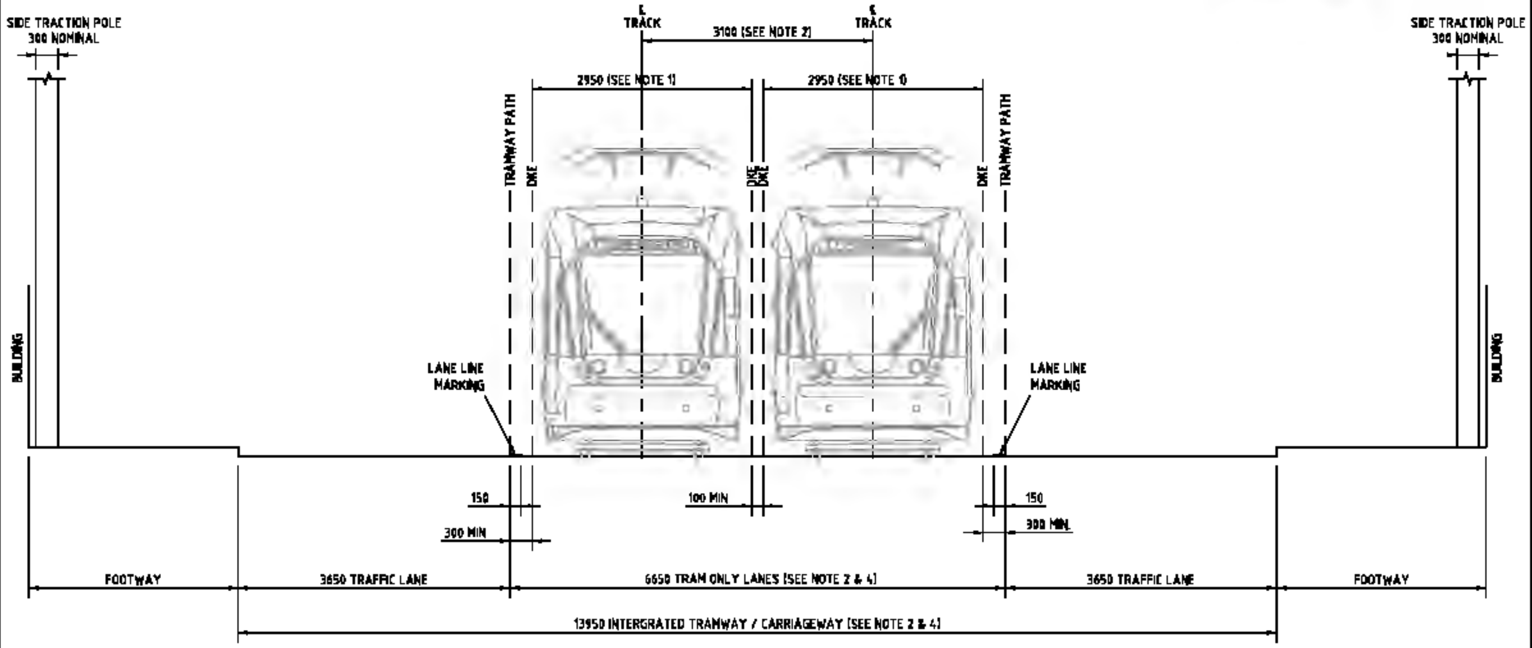

CROSS SECTION 5

INTERGRATED ON-STREET TRAMWAY
FOUR LANE CARRIAGEWAY / TRAMWAY
CENTRE LANES RESTRICTED TO TRAM ONLY

NOTES:
1. DKE DIMENSIONS ARE BASED ON 2.65m WIDE ASSUMED DESIGN TRAM VEHICLE AND RELATE TO STRAIGHT TRACK. THESE DIMENSIONS WILL INCREASE FOR CURVED ALIGNMENTS. (REFER TO TABLES INCLUDED IN ASSUMED DESIGN TRAM VEHICLE REPORT)
2. THE TRACK SEPARATION DIMENSION IS BASED ON 2.65m WIDE ASSUMED DESIGN TRAM VEHICLE AND IS APPLICABLE TO HORIZONTAL RADII OF 350m AND ABOVE INCLUDING STRAIGHT TRACK. THIS DIMENSION WILL INCREASE FOR CURVED ALIGNMENTS (REFER TO TABLES INCLUDED IN ASSUMED DESIGN TRAM VEHICLE REPORT) WITH CONSEQUENTIAL INCREASE IN THE OVERALL TRAMWAY WIDTH.
3. CLEARANCES AND DIMENSIONS INDICATED ARE MINIMUMS UNLESS OTHERWISE STATED. ALIGNMENT AND ROAD INTEGRATION CONSIDERATIONS MAY NECESSITATE THE ADOPTION OF LARGER DIMENSIONS AT SPECIFIC LOCATIONS.
4. REDUCING THE LANE WIDTHS TO [illegible] (THE MINIMUM SUGGESTED BY RSPG) WILL REDUCE THE OVERALL INTERGRATED TRAMWAY / CARRIAGEWAY WIDTH TO [illegible].

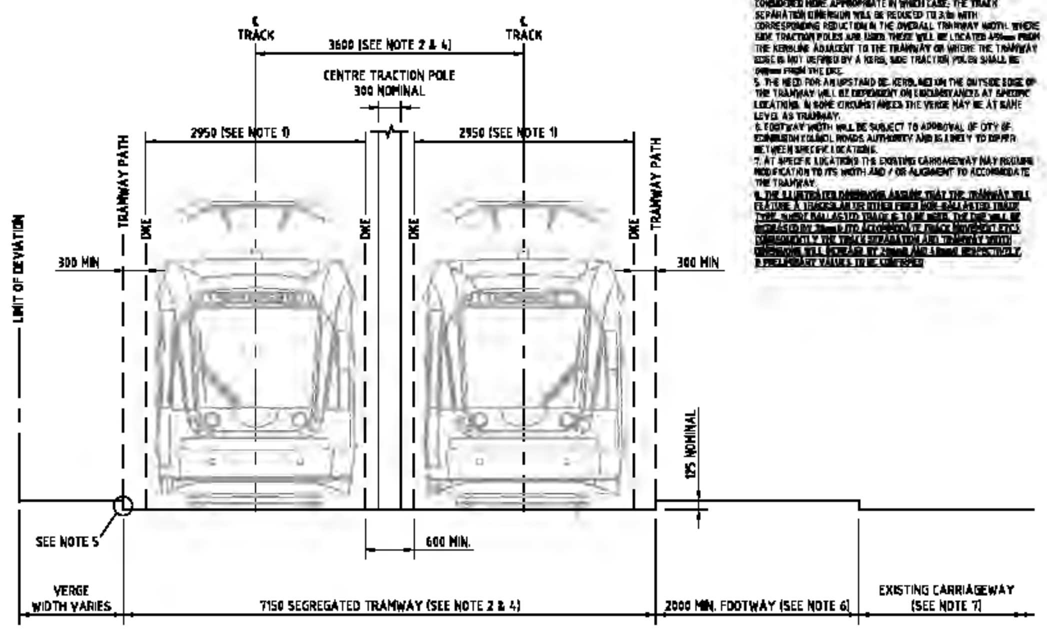

CROSS SECTION 7

SEGREGATED ON-STREET TRAMWAY IN SIDE RESERVATION
FOOTWAY BETWEEN TRAMWAY AND CARRIAGEWAY

NOTES:
1. DKE DIMENSIONS ARE BASED ON 2.65m WIDE ASSUMED DESIGN TRAM VEHICLE AND RELATE TO STRAIGHT TRACK. THESE DIMENSIONS WILL INCREASE FOR CURVED ALIGNMENTS. (REFER TO TO TABLES INCLUDED IN ASSUMED DESIGN TRAM VEHICLE REPORT)
2. THE TRACK SEPARATION DIMENSION IS BASED ON 2.65m WIDE ASSUMED DESIGN TRAM VEHICLE AND IS APPLICABLE TO HORIZONTAL RADII OF 350m AND ABOVE INCLUDING STRAIGHT TRACK. THIS DIMENSION WILL INCREASE FOR CURVED ALIGNMENTS (REFER TO TABLES INCLUDED IN ASSUMED DESIGN TRAM VEHICLE REPORT) WITH CONSEQUENTIAL INCREASE IN THE OVERALL TRAMWAY WIDTH.
3. CLEARANCES AND DIMENSIONS INDICATED ARE MINIMUMS UNLESS OTHERWISE STATED. ALIGNMENT AND ROAD INTEGRATION CONSIDERATIONS MAY NECESSITATE THE ADOPTION OF LARGER DIMENSIONS AT SPECIFIC LOCATIONS.
4. THE ARRANGEMENT ILLUSTRATED INCORPORATES CENTRE TRACTION POLES. AT SPECIFIC LOCATIONS SIDE TRACTION POLES MAY BE CONSIDERED MORE APPROPRIATE IN WHICH CASE; THE TRACK SEPARATION DIMENSION WILL BE REDUCED TO 3.1m WITH CORRESPONDING REDUCTION IN THE OVERALL TRAMWAY WIDTH. WHERE SIDE TRACTION POLES ARE USED THESE WILL BE LOCATED 450mm FROM THE KERBLINE ADJACENT TO THE TRAMWAY OR WHERE THE TRAMWAY EDGE IS NOT DEFINED BY A KERB, SIDE TRACTION POLES SHALL BE 600mm FROM THE DKE.
5. THE NEED FOR AN UPSTAND (IE. KERBLINE) ON THE OUTSIDE EDGE OF THE TRAMWAY WILL BE DEPENDENT ON CIRCUMSTANCES AT SPECIFIC LOCATIONS. IN SOME CIRCUMSTANCES THE VERGE MAY BE AT SAME LEVEL AS TRAMWAY.
6. FOOTWAY WIDTH WILL BE SUBJECT TO APPROVAL OF CITY OF EDINBURGH COUNCIL ROADS AUTHORITY AND IS LIKELY TO DIFFER BETWEEN SPECIFIC LOCATIONS.
7. AT SPECIFIC LOCATIONS THE EXISTING CARRIAGEWAY MAY REQUIRE MODIFICATION TO ITS WIDTH AND / OR ALIGNMENT TO ACCOMMODATE THE TRAMWAY.
8. THE ILLUSTRATED DIMENSIONS ASSUME THAT THE TRAMWAY WILL FEATURE A TRACKSLAB OR OTHER FIXED NON-BALLASTED TRACK TYPE. WHERE BALLASTED TRACK IS TO BE USED, THE DKE WILL BE INCREASED BY 20mm (TO ACCOMMODATE TRACK MOVEMENT ETC.). CONSEQUENTLY THE TRACK SEPARATION AND TRAMWAY WIDTH DIMENSIONS WILL INCREASE BY 20mm AND 40mm RESPECTIVELY. (PRELIMINARY VALUES TO BE CONFIRMED)

NOTES
1. ALL DIMENSIONS ARE IN MILLIMETRES UNLESS OTHERWISE STATED.
2. REFER TO DRAWING ULE-90130-SW-SW-TRK-DRG-00023 LINE 1 ROUTE PLAN PROPOSED TRAMWAY CATEGORY FOR SECTION LOCATIONS.
3. THIS DRAWING IS NOT FOR CONSTRUCTION.
4. DWG HUMMINGBIRD REF: 24330
PDF REF: 24351

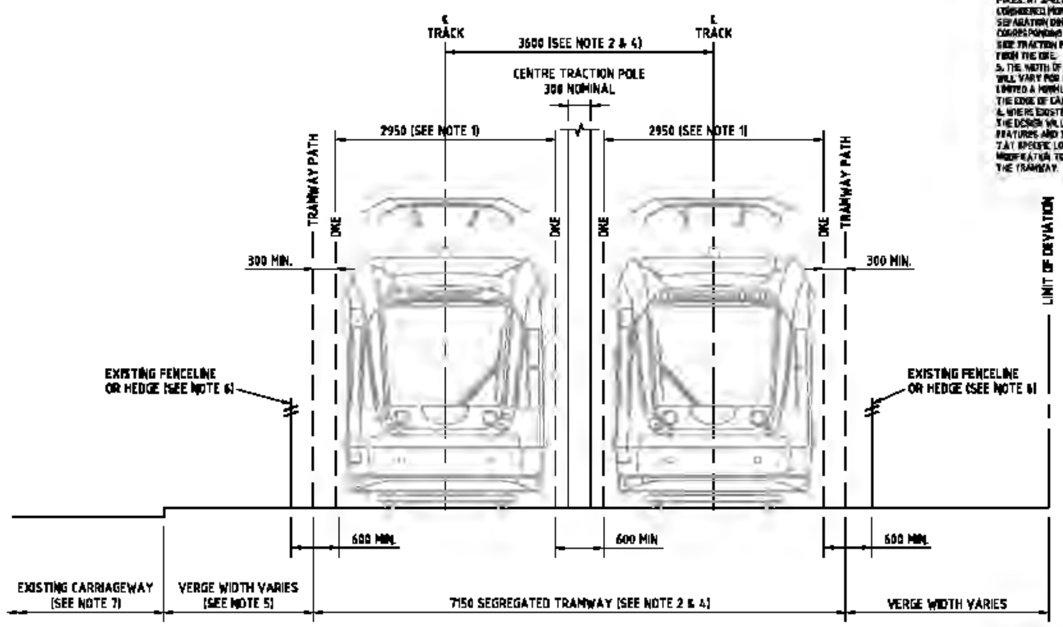

CROSS SECTION 6

SEGREGATED ON-STREET TRAMWAY IN SIDE RESERVATION
TRAMWAY IN VERGE

NOTES:
1. DKE DIMENSIONS ARE BASED ON 2.65m WIDE ASSUMED DESIGN TRAM VEHICLE AND RELATE TO STRAIGHT TRACK. THESE DIMENSIONS WILL INCREASE FOR CURVED ALIGNMENTS. (REFER TO TO TABLES INCLUDED IN ASSUMED DESIGN TRAM VEHICLE REPORT)
2. THE TRACK SEPARATION DIMENSION IS BASED ON 2.65m WIDE ASSUMED DESIGN TRAM VEHICLE AND IS APPLICABLE TO HORIZONTAL RADII OF 350m AND ABOVE INCLUDING STRAIGHT TRACK. THIS DIMENSION WILL INCREASE FOR CURVED ALIGNMENTS (REFER TO TABLES INCLUDED IN ASSUMED DESIGN TRAM VEHICLE REPORT) WITH CONSEQUENTIAL INCREASE IN THE OVERALL TRAMWAY WIDTH.
3. CLEARANCES AND DIMENSIONS INDICATED ARE MINIMUMS UNLESS OTHERWISE STATED. ALIGNMENT AND ROAD INTEGRATION CONSIDERATIONS MAY NECESSITATE THE ADOPTION OF LARGER DIMENSIONS AT SPECIFIC LOCATIONS.
4. THE ARRANGEMENT ILLUSTRATED INCORPORATES CENTRE TRACTION POLES. AT SPECIFIC LOCATIONS SIDE TRACTION POLES MAY BE CONSIDERED MORE APPROPRIATE IN WHICH CASE; THE TRACK SEPARATION DIMENSION WILL BE REDUCED TO 3.1m WITH CORRESPONDING REDUCTION IN THE OVERALL TRAMWAY WIDTH. WHERE SIDE TRACTION POLES ARE USED THESE SHALL BE LOCATED 600mm FROM THE DKE.
5. THE WIDTH OF VERGE BETWEEN THE TRAMWAY AND CARRIAGEWAY WILL VARY FOR DIFFERENT LOCATIONS. WHERE AVAILABLE SPACE IS LIMITED A MINIMUM OF 300mm WILL ALWAYS BE PROVIDED BETWEEN THE EDGE OF CARRIAGEWAY AND THE DKE.
6. WHERE EXISTING FENCELINES OR HEDGES ARE TO BE ACCOMMODATED THE DESIGN WILL PROVIDE A MINIMUM OF 600mm BETWEEN THESE FEATURES AND THE DKE.
7. AT SPECIFIC LOCATIONS THE EXISTING CARRIAGEWAY MAY REQUIRE MODIFICATION TO ITS WIDTH AND / OR ALIGNMENT TO ACCOMMODATE THE TRAMWAY.

NOTES CONT:
8. THE ILLUSTRATED DIMENSIONS ASSUME THAT THE TRAMWAY WILL FEATURE A TRACKSLAB OR OTHER FIXED NON-BALLASTED TRACK TYPE. WHERE BALLASTED TRACK IS TO BE USED, THE DKE WILL BE INCREASED BY 20mm (TO ACCOMMODATE TRACK MOVEMENT ETC.). CONSEQUENTLY THE TRACK SEPARATION AND TRAMWAY WIDTH DIMENSIONS WILL INCREASE BY 20mm AND 40mm RESPECTIVELY. (PRELIMINARY VALUES TO BE CONFIRMED)

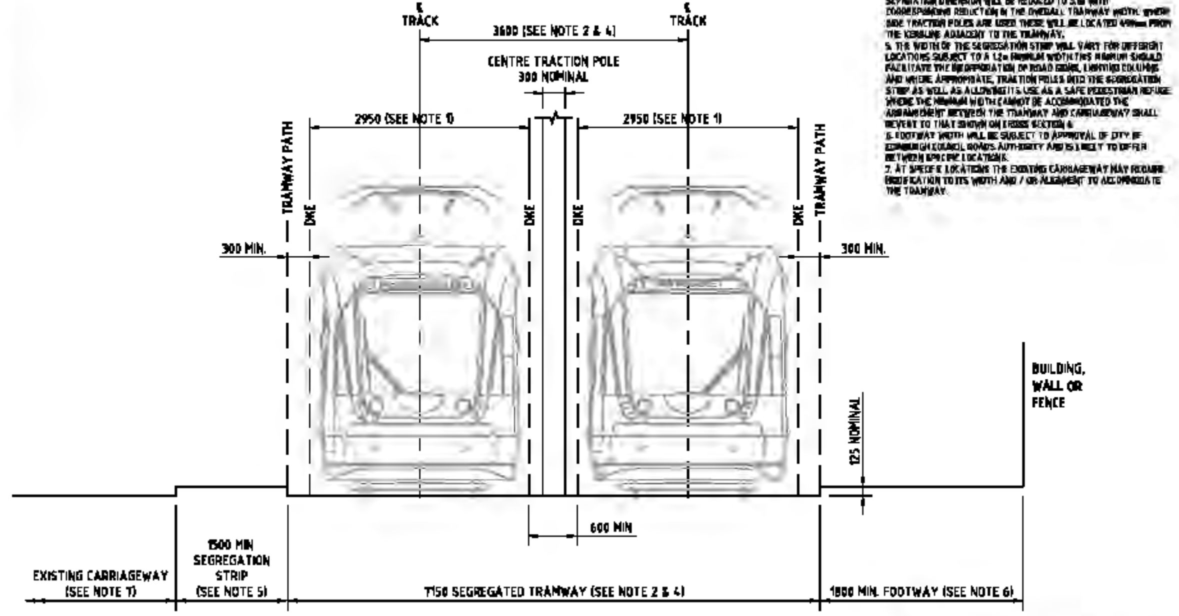

CROSS SECTION 8

SEGREGATED ON-STREET TRAMWAY IN SIDE RESERVATION
SEGREGATION STRIP BETWEEN TRAMWAY AND CARRIAGEWAY.
FOOTWAY TO OUTSIDE OF TRAMWAY

NOTES:
1. DKE DIMENSIONS ARE BASED ON 2.65m WIDE ASSUMED DESIGN TRAM VEHICLE AND RELATE TO STRAIGHT TRACK. THESE DIMENSIONS WILL INCREASE FOR CURVED ALIGNMENTS. (REFER TO TO TABLES INCLUDED IN ASSUMED DESIGN TRAM VEHICLE REPORT)
2. THE TRACK SEPARATION DIMENSION IS BASED ON 2.65m WIDE ASSUMED DESIGN TRAM VEHICLE AND IS APPLICABLE TO HORIZONTAL RADII OF 350m AND ABOVE INCLUDING STRAIGHT TRACK. THIS DIMENSION WILL INCREASE FOR CURVED ALIGNMENTS (REFER TO TABLES INCLUDED IN ASSUMED DESIGN TRAM VEHICLE REPORT) WITH CONSEQUENTIAL INCREASE IN THE OVERALL TRAMWAY WIDTH.
3. CLEARANCES AND DIMENSIONS INDICATED ARE MINIMUMS UNLESS OTHERWISE STATED. ALIGNMENT AND ROAD INTEGRATION CONSIDERATIONS MAY NECESSITATE THE ADOPTION OF LARGER DIMENSIONS AT SPECIFIC LOCATIONS.
4. THE ARRANGEMENT ILLUSTRATED INCORPORATES CENTRE TRACTION POLES. AT SPECIFIC LOCATIONS SIDE TRACTION POLES MAY BE CONSIDERED MORE APPROPRIATE IN WHICH CASE; THE TRACK SEPARATION DIMENSION WILL BE REDUCED TO 3.1m WITH CORRESPONDING REDUCTION IN THE OVERALL TRAMWAY WIDTH. WHERE SIDE TRACTION POLES ARE USED THESE WILL BE LOCATED 450mm FROM THE KERBLINE ADJACENT TO THE TRAMWAY.
5. THE WIDTH OF THE SEGREGATION STRIP WILL VARY FOR DIFFERENT LOCATIONS SUBJECT TO A 1.2m MINIMUM WIDTH. THIS MINIMUM SHOULD FACILITATE THE INCORPORATION OF ROAD SIGNS, LIGHTING COLUMNS AND WHERE APPROPRIATE, TRACTION POLES INTO THE SEGREGATION STRIP AS WELL AS ALLOWING ITS USE AS A SAFE PEDESTRIAN REFUGE. WHERE THE MINIMUM WIDTH CANNOT BE ACCOMMODATED THE ARRANGEMENT BETWEEN THE TRAMWAY AND CARRIAGEWAY SHALL REVERT TO THAT SHOWN ON CROSS SECTION 6.
6. FOOTWAY WIDTH WILL BE SUBJECT TO APPROVAL OF CITY OF EDINBURGH COUNCIL ROADS AUTHORITY AND IS LIKELY TO DIFFER BETWEEN SPECIFIC LOCATIONS.
7. AT SPECIFIC LOCATIONS THE EXISTING CARRIAGEWAY MAY REQUIRE MODIFICATION TO ITS WIDTH AND / OR ALIGNMENT TO ACCOMMODATE THE TRAMWAY.

NOTES CONT:
8. THE ILLUSTRATED DIMENSIONS ASSUME THAT THE TRAMWAY WILL FEATURE A TRACKSLAB OR OTHER FIXED NON-BALLASTED TRACK TYPE. WHERE BALLASTED TRACK IS TO BE USED, THE DKE WILL BE INCREASED BY 20mm (TO ACCOMMODATE TRACK MOVEMENT ETC.). CONSEQUENTLY THE TRACK SEPARATION AND TRAMWAY WIDTH DIMENSIONS WILL INCREASE BY 20mm AND 40mm RESPECTIVELY. (PRELIMINARY VALUES TO BE CONFIRMED)

REV.	DESCRIPTION OF REVISION	DRN.	CHKD.	APP	DATE
6	SIDE OLE POLE RELOCATED TO REAR OF FOOTWAY. ISSUED FOR TENDER PURPOSES ONLY	RAH	AJ	CH	25/09/06
5	SHEET NOW 2 OF 8	DS	MG	AJ	24/05/06
4	SHEET NOW 2 OF 5	CC	MG	AJ	03/05/06
3	INTEGRATION COMMENTS INCORPORATED	CC	MG	AJ	07/04/06
2	REVISIONS TO PRELIMINARY ISSUE	CC	MG	AJ	24/03/06
1	PRELIMINARY ISSUE FOR COMMENTS	CC	MG	AJ	23/03/06

DRAWING STATUS
For Tender Purposes Only

EDINBURGH TRAM NETWORK

PARSONS BRINCKERHOFF
SDS
CITY POINT
65 HAYMARKET TERRACE
EDINBURGH EH12 5HD

SYSTEM WIDE
TYPICAL TRAMWAY CROSS SECTIONS
SHEET 2 OF 8

DRAWN BY	CHECKED BY
COXC	JORYA
APPROVED BY	ORIGINAL DRAWING SIZE
MASONC	A1
DATE	SCALE(S)
23/03/2006	1:50

DRAWING NUMBER: ULE90130-SW-DRG-00032 REV. 6
PB INTERNAL VERSION NUMBER "1"

USB00000086_0383

Edinburgh Tram Network

Assumed Design Tram Vehicle

Doc. Ref: ULE90130-SW-REP-00010 V3

PARSONS BRINCKERHOFF

Parsons Brinckerhoff Ltd
Edinburgh Tram Network
SDS Provider
16 Abercromby Place
Edinburgh, EH3 6LB

Telephone: 44(0) 131 272 3318
Facsimile: 44(0) 131 272 3302
Email: edinburghtram@pbworld.com

15th March 2006

AUTHORISATION PAGE

Title: Assumed Design Tram Vehicle				
Approvals	**Name**	**Position**	**Signed**	**Date**
PB Author	M. Gillespy	Track Design Engineer	M. Gillespy	15 Mar 06
PB Reviewer	A. Jory	Track Design Team Leader		16/03/06
Project Manager	P McCauley	Project Manager		16 MAR 06

Description

Ver No	Date	Description	Prepared By
1	17 Feb 06	1st Draft for Internal Comment	M Gillespy
2	2 March 06	2nd Draft for Review Inc comments from Meeting 01/03/06	M Gillespy
3	15 March 06	Formal Issue to **tie**	M Gillespy

Distribution

Ver No	Date	Name	Role	Company
1	1 March 06	Attendees at Internal Meeting	Discussion of Draft Document	SDS
2	2 March 06	T Jory	PB Reviewer	SDS
3	15 Mar. 06	Willie Fraser	Contract Representative	**tie**

EXECUTIVE SUMMARY

The objective of this Report is to establish an Assumed Design Tram Vehicle to be used in the development of the design for both track alignment design and associated infrastructure changes during the Design Stage of the development of Edinburgh Tram Network by the SDS.

Currently the preferred tram vehicle to be used for the Edinburgh Tram Network has yet to be established and is to be the subject of a competitive tender process and as such is unlikely to be firmly established for several months (or longer). In the meantime programme requirements necessitate that the track alignment and infrastructure design are advanced from the Pre SDS designs that formed the basis of STAG and Parliamentary Bill Submission. Thus it is necessary for the SDS Track designers to establish a Design Tram Vehicle that is representative of the type that will eventually be selected for the Network in relation to the size of its Developed Kinematic Envelope and the 'Tramway Path' derived from this.

Previous (Pre SDS) design work has used an assumed design tram vehicle based on a Seimens "Duewag" tram similar to that in use in Sheffield, this being perceived as a representative vehicle by the pre SDS Designers at the time of the commencement of the initial design work.

In establishing the Assumed Design Tram Vehicle it is important that the vehicle is representative of a type that may ultimately be chosen for the system, but not too conservatively large or small that the track design is at risk when the vehicle is eventually chosen. It is important to recognise that it is the overall spatial requirement of the Developed Kinematic Envelope and thus the 'Tramway Path' that result from the Design Tram Vehicle that are the critical factors, rather than the precise physical make up and configuration of the vehicle itself.

In order to ensure that the Developed Kinematic Envelope produced by the Assumed Design Tram vehicle is representative of that which would result from any of the currently available tram vehicles, a comparison of the static envelope widths and off-sets for different tram vehicles has been undertaken. The conclusion from this work is that it is necessary to consider an alternative to the Duewag for the future design work.

The comparison confirms that the Flexity-Swift would serve as an Assumed Design Vehicle for the development of the Design of the Track Alignment prior the selection of a preferred tram vehicle.

The overall envelope width produced by this vehicle is larger than others considered but not excessively so. Consequently its use as an Assumed Design Tram Vehicle can be justified. The resulting alignment design should be sufficient to accommodate the trams currently under consideration for the Edinburgh Tram Network.

The static envelope to define the Developed Kinematic Envelope for the Assumed Design Tram Vehicle will be 150mm to each edge of the static envelope (ie 300mm increase in the overall envelope width).

The Assumed Design Developed Kinematic Envelope dimensions based on the Assumed Design Tram Vehicle and applicable to slab track or other fixed, non-ballasted track types based are presented in the Report. **In cases where ballasted track type is proposed, a further allowance will need to be added into the Developed Kinematic Envelope** to account for the fact that ballasted track is not fixed and thus will tend to shift position (within set maintenance limits) during service.

It should be appreciated that while the overall spatial provision for the tramway that is established by the Assumed Design Tram should be sufficient, further alignment design modifications are almost inevitable when an actual tram vehicle is selected. This is necessary because the balance between the width of centre-throw and end throw varies between different tram types

It is important to also appreciate that the Assumed Design Tram Vehicle will not necessarily prejudice or prescribe the eventual choice of vehicle, though it will assist in informing this process as the Developed Kinematic Envelope and other alignment characteristics of vehicles under consideration can be compared with that of the Assumed Design Tram Vehicle and the extent of design change associated with a particular vehicle and potential impact on identified alignment constraints along the route of the tramway can be established.

The vehicle procurement process will require manufacturers to supply static and dynamic profile data and dimensions of the static envelope and Developed Kinematic Envelope associated with their vehicles.

CONTENTS

	EXECUTIVE SUMMARY		3
1		**INTRODUCTION**	**6**
	1.1	Document Purpose	6
	1.2	Document Scope	6
2		**APPROACH TO ALIGNMENT AND INFRASTRUCTURE DESIGN**	**7**
	2.1	Developed Kinematic Envelope (DKE)	7
	2.2	Tramway Path	7
	2.3	Design Tram Vehicle	7
3		**ESTABLISHMENT OF ASSUMED DESIGN TRAM VEHICLE**	**9**
	3.1	Strategy	9
	3.2	Comparison of Static Envelopes	9
	3.3	Proposed Assumed Design Tram Vehicle	11
4		**DETERMINATION OF TRAMWAY PATH FROM DESIGN TRAM VEHICLE**	**12**
	4.1	Establishing Developed Kinematic Envelope	12
	4.2	Determination of Tramway Path	12
	4.3	Assessment of Implications for design Developed Kinematic Envelope in Event that 100% low floor vehicle is chosen.	13
	4.4	Input to Tram Vehicle Procurement Process	13
5		**APPLICABLE STANDARDS**	**15**
	5.1	General	15
6		**APPENDIX A: TABLES**	**16**
7		**APPENDIX B: DETAILS OF DESIGN TRAM VEHICLE**	**22**

1 INTRODUCTION

1.1 Document Purpose

1.1.1 The objective of this Report is to establish an Assumed Design Tram Vehicle to be used in the development of the design for both track alignment design and associated infrastructure changes during the Design Stage of the development of Edinburgh Tram Network by the SDS.

1.2 Document Scope

1.2.1 This document and the Assumed Design Tram Vehicle that it describes are applicable to the Alignment and Infrastructure design including the associated spatial requirements for the entire Edinburgh Tram Network.

2 APPROACH TO ALIGNMENT AND INFRASTRUCTURE DESIGN

2.1 Developed Kinematic Envelope (DKE)

2.1.1 In order to develop and verify the alignment design for The Edinburgh Tram Network it is necessary to establish the Developed Kinematic Envelope associated with the proposed track alignment and proposed tram vehicle. The Developed Kinematic Envelope is based upon the static and dynamic envelope for a tram vehicle and takes into account permitted tolerances in track gauge, alignment, level and cross level and dynamic and static effects of track wear (ie the kinematic envelope). The Developed Kinematic Envelope also takes account of the effects of curvature, including superelevation of the track and end throw and centre throw of the tram. It is also speed dependent, but is unique to the particular location at a given speed.

2.1.2 The track and infrastructure design should allow adequate lateral clearances to be provided, to allow trams to pass one another on adjacent tracks, or between trams and other road vehicles on adjacent carriageways. Additional clearances between trams and fixed structures should be provided to allow for the presence of people.

2.2 Tramway Path

2.2.1 The necessary clearances between the Developed Kinematic Envelope and features, described in 2.1.2 above, are given by HM Railway Inspectorate in Railway Safety Principles and Guidance Part 2 Section G Guidance on Tramways.

2.2.2 The Tramway Path is the name given to the area enclosed by the Developed Kinematic Envelope with the addition of these clearances.

2.3 Design Tram Vehicle

2.3.1 Currently the preferred tram vehicle to be used for the Edinburgh Tram Network has yet to be established and is to be the subject of a competitive tender process. Consequently the preferred tram vehicle is unlikely to be firmly established for several months (or longer). In the meantime programme requirements necessitate that the track alignment and infrastructure design are advanced from the Pre SDS designs that formed the basis of STAG and Parliamentary Bill Submission. Thus it is necessary for the SDS Track designers to establish a Design Tram Vehicle that is representative of the type that will eventually be selected for the Network in relation to the size of its Developed Kinematic Envelope and the 'Tramway Path' derived from this.

2.3.2 In establishing this Assumed Design Tram Vehicle it is important that the vehicle is representative of a type that may ultimately be chosen for the system, but not too conservatively large or small that the track design is at risk when the vehicle is eventually chosen. It is important to recognise that it is the overall spatial requirement of the Developed Kinematic Envelope and thus the 'Tramway Path' that result from the Design Tram Vehicle that are the critical factors, rather than the precise physical make up and configuration of the vehicle itself.

2.3.3 Thus while it is relevant that the Assumed Design Tram Vehicle is based on a real tram that is currently available it is important that the chosen vehicle generates a Developed Kinematic Envelope that is representative of that generated by a range of current vehicles. In this way the SDS designer will meet the objective that the Tramway Path for the track design is representative but not too conservatively large or small that it is at risk when the vehicle is eventually chosen.

2.3.4 It is important to also appreciate that the Assumed Design Tram Vehicle will not necessarily prejudice or prescribe the eventual choice of vehicle, though it will assist in informing this process as the Developed Kinematic Envelope and other alignment characteristics of vehicles under consideration can be compared with that of the Assumed Design Tram Vehicle and the extent of design change associated with a particular vehicle and potential impact on identified alignment constraints along the route of the tramway can be established.

3 ESTABLISHMENT OF ASSUMED DESIGN TRAM VEHICLE

3.1 Strategy

3.1.1 In order to ensure that the Developed Kinematic Envelope produced by the Assumed Design Tram vehicle is representative of that which would result from any of the currently available tram vehicles, a comparison of the static envelope widths and off-sets for different tram vehicles has been undertaken and the results of this are indicated in Table 1 in Appendix A.

3.1.2 In choosing the vehicles for this comparison consideration has been given to any known requirements that **tie** and **Transdev** have declared in respect of the tram vehicle for the Edinburgh Tram Network, and which are included in the Tram Requirements Specification. Clause 3.31 of the Tram Requirements Specification states that "The tram body shall be a nominal width of 2.65m externally."

3.1.3 Note has also been made of Clause 3.6.1 Door Description, the requirements of which, precludes those tram types that feature large single sliding doors rather than bi-parting pairs of doors.

3.1.4 Consideration has also been given to the fact that currently the use of 40m long vehicles is considered as a possibility.

3.1.5 The fact that at this stage there is the possibility of either a 100% low floor or 70% low floor tram vehicle being chosen for the Edinburgh Tram Network has also been taken into account. The majority of currently available 100% low floor trams have body widths that are less than 2.65m. Current experience also shows that though a 100% low floor tram will tend to produce a narrower static envelope than a 70% low floor vehicle, the margin between the static envelope and the Developed Kinematic Envelope is greater for a 100% low floor than for a 70% low floor, particularly at small to mid range curves and consequently the Developed Kinematic Envelope for a 100% low floor has the potential to be as large as that for a 70% low floor. This is despite the fact that overall body width of the 100% low floor may be narrower.

3.1.6 There is the potential that the Developed Kinematic Envelope for a 2.65m wide 100% low floor tram could be excessively wide. The vehicle selection process will need to ensure that vehicle manufacturers provide sufficient details of the static and dynamic profiles as well as dimensions of the Developed Kinematic Envelope for their proposed vehicles, particularly where 100% low floor trams are being proposed. In order that a realistic comparison can be made between the Developed Kinematic Envelope for proposed vehicles with that for the Assumed Design Tram.

3.2 Comparison of Static Envelopes

3.2.1 The static envelopes for several tram vehicles have been considered and compared for a range of horizontal curve values and this is shown in Table 1 of Appendix A. Details of the vehicles considered are given in Table 2.

3.2.2 The envelopes were produced using the AutoTRAM software running the tram models around the indicated horizontal curves. The Sheffield, Dublin, Montpellier,Houston and Lyon (Citadis 302) tram models were taken from the suite of vehicles supplied with the AutoTRAM Programme and the model for the Merseytram was that 'built' by Parsons Brinkerhoff as part of their work on the Merseytram Project. This was based on the Bombardier Flexity-Swift.

3.2.3 The Sheffield "Duewag" tram has been included in the comparison because this vehicle was chosen by **tie's** previous Designers during the development of the pre-SDS design work. The other vehicles are all representative of modern currently available tram vehicles and as such represent types that may ultimately be selected for the Edinburgh Tram Network.

3.2.4 The Merseytram "Flexity-Swift" tram is a 30m long vehicle. It is understood that **tie** and Transdev wish to consider the possible use of 40m long vehicles. The modular architecture of modern tram vehicles is such that longer vehicles will usually feature additional units utilising the same generic vehicle makeup. There are examples of this in relation to Bombardier's Flexity-Swift model, the Rotterdam version of which is extended to over 40m by the inclusion of an additional 3rd body unit between the two end units. Consequently the static envelope produced by the 30m long version considered here can be reasonably confidently predicted to be representative of the envelope which would be produced by a longer version.

3.2.5 The Dublin tram model represents a 2.4m wide 40m long "Citadis 401" vehicle. It is understood that manufacturers Alstom have indicated in their expressions of interest that for Edinburgh they would develop a 2.65m wide version of this vehicle.

3.2.6 The Montpellier tram model represents a 2.65m wide 30m long "Citadis 301" vehicle. By observation and comparison with the results from the longer and narrower "Citadis 401" (Dublin) vehicle, and considering the potential addition of a further 125mm to the offsets for the narrower vehicle to reflect a 2.65m body, it would appear that the envelope produced by the "Citadis 301" is likely to be representative of an envelope that would be generated by a 2.65m wide version of the longer "Citadis 401".

3.2.7 The Houston tram model represents a 2.65m wide 30m long "S70" type vehicle manufactured by Siemens and identified by them as a potential vehicle for use on the Edinburgh Tram Network. Though regarded a physically large vehicle the static envelope dimensions produced are less than those produced by the Merseytram and Montpellier vehicles, as discussed below.

3.2.8 The "Citadis 302" tram model is representative of the five car 100% low floor vehicle manufactured by Alstom and in use in several locations including Lyon, Bordeaux and Melbourne. As would be expected with a multi-articulated vehicle of this type, the static envelope for this is smaller than that for the 70% low floor vehicles (including the Duewag) but as discussed in 3.1.5 above the margin between the static envelope and the Developed Kinematic Envelope has the potential to be larger for a 100% low floor tram because of the way these vehicles are configured and behave dynamically. The implications of this in relation to the choice of an Assumed Design Tram Vehicle are considered further in Section 4 of this Report.

3.2.9 Highlighted on Table 1 are the critical (ie largest) values for offset from centre line to the edge of the static envelope both outside and inside the curves and also for the width of the envelope overall.

3.2.10 Table 1 illustrates that the majority of the more modern trams are producing larger envelopes than the Duewag tram, that was the design vehicle for the earlier work on Edinburgh and so clearly there is a need to consider an alternative design vehicle for the development of the SDS track design during the Preliminary Design and subsequent Design Stages.

3.2.11 The table also illustrates that the 2.65m wide "Citadis 301" (Montpellier) tram is the most critical in terms of size of off-set on the outside of the curve, ie defined by the vehicle 'end-throw'. By observation these offsets are 147mm larger than the Flexity-Swift for 25m radius, reducing to 102mm difference at 40m radius, 41mm at 100m and 9mm at 500m.

3.2.12 The Flexity-Swift (Merseytram) tram is generally the most critical in terms of size of offset on the inside of the curve, ie defined by the vehicle 'centre-throw'. By observation these offsets are 226mm larger than the Citadis 301 for 25m radius, reducing to 140mm difference at 40m radius, 55mm at 100m and 11mm at 500m.

3.2.13 Finally the table also illustrates that the overall swept envelope widths are most critical for the Flexity-Swift and in comparison with the previous design vehicle (the Duewag) the envelope is 188mm wider at 25m radius, 29mm at 40m, 25mm at 100m and 4mm at 500m.

3.2.14 In comparison with the Citadis 301 the variations to the Flexity-Swift envelope are generally less; 79mm at 25m radius, 38mm at 40m, 14mm at 100m and 2mm at 500m.

3.3 Proposed Assumed Design Tram Vehicle

3.3.1 The conclusion from the above work is that it is necessary to consider an alternative to the Duewag for the future design work.

3.3.2 The figures in Table 1 confirm that the Flexity-Swift would serve as an Assumed Design Vehicle for the development of the Design of the Track Alignment prior to the selection of a preferred tram vehicle.

3.3.3 As discussed above the Flexity-Swift is the most critical in terms of the size of offset to static envelope on the inside of the curves whilst the Citadis 301 is the most critical in terms of offset on the outside of the curve. One approach considered for the definition of the design envelope would be the combination of the worst case offsets for inside and outside offsets for the different trams to produce a "worst case envelope", however as Table 1 and paras 3.2.11 and 3.2.12 illustrate this approach would lead to an overly large envelope and consequently this would not be representative of that which would result from any of the currently available tram vehicles.

3.3.4 Consideration of the results in Table 1 suggest that a preferable approach to the definition of the Assumed Design Tram Vehicle is to consider the overall envelope widths produced by each of the tram vehicles and select the Assumed Design Tram Vehicle on that basis.

3.3.5 The overall envelope width produced by the Flexiy-Swift vehicle is larger than others considered but not excessively so. Consequently its use as an Assumed Design Tram Vehicle can be justified. The resulting alignment design should (subject to the provisos below) be sufficient to accommodate the trams currently under consideration for the Edinburgh Tram Network.

3.3.6 It should be appreciated that while the overall spatial provision for the tramway that is established by the Assumed Design Tram should be sufficient, further alignment design modifications are almost inevitable when an actual tram vehicle is selected. This is necessary because the balance between the width of centre-throw and end throw varies between different tram types as is illustrated in Table 1.

3.3.7 This said, particular care will also be needed to ensure that manufacturers supply static and dynamic profile data and dimensions of the static envelope and Developed Kinematic Envelope associated with their vehicles (particularly any 100% low floor trams). This data should be sufficient and accurate to ensure that the actual Developed Kinematic Envelope values associated with proposed vehicles are not excessive in comparison with those assumed for the Design Tram Vehicle, and also so that any excedences can be identified and the potential implications of these on the track and infrastructure design be understood

3.3.8 Details of the design Tram Vehicle proposed by this report are illustrated in Appendix B

4 DETERMINATION OF TRAMWAY PATH FROM DESIGN TRAM VEHICLE

4.1 Establishing Developed Kinematic Envelope

4.1.1 To define the Developed Kinematic Envelope it is necessary to add allowances to the static envelope to account for the dynamic behaviour of the tram vehicle in motion and then add further allowances to account for the static and dynamic implications of permitted tolerances in track gauge, alignment, level and cross level and dynamic and static effects of track wear.

4.1.2 The magnitude of these allowances will vary between vehicle types and is also dependent on the track construction and maintenance tolerances that are applied to the system. Experience suggests that an allowance of 125mm to either side of the static envelope is a reasonable assumption for a 75% low floor tram design. The allowance for the further effects of track construction and maintenance is dependent of the severity of the construction and maintenance specification to be established for the Edinburgh Tram Network and will also vary between trackwork that is mounted on slabs or other rigid or semi-rigid constructions and any ballasted track areas. Again based on experience an assumed further allowance of 25mm is suggested to take account of the effects of track construction and maintenance for slab track and other fixed, non-ballasted track types.

4.1.3 Thus the total suggested addition to the static envelope to define the Developed Kinematic Envelope for the Assumed Design Tram Vehicle, when operating over slab track or other fixed non-ballasted track types, will be 150mm to each edge of the static envelope (ie 300mm increase in the overall envelope width).

4.1.4 The Assumed Design Developed Kinematic Envelope dimensions based on the Assumed Design Tram Vehicle and applicable to slab track or other fixed, non-ballasted track types based are presented in Table 3 of Appendix A to this Report.

4.1.5 **In cases where ballasted track is proposed, a further allowance will need to be added into the Developed Kinematic Envelope** to account for the fact that ballasted track is not fixed and thus will tend to shift position (within set maintenance limits) during service.

4.2 Determination of Tramway Path

4.2.1 The minimum passing clearance between Developed Kinematic Envelopes of opposing trams is recommended by the HMRI (in RSPG Pt 2 Sec G chapter 3 para 110) as follows:-

- Without centre traction poles – 100mm
- With traction poles between DKEs – 600mm (but at least 100mm from the face of the nearest side of the pole to each DKE).

4.2.2 The HMRI (in RSPG Pt 2 Sec G chapter 3 para 111) recommends minimum clearances to be applied between the Developed Kinematic Envelope and various features and 'structures' in order to define the "Tramway Path" these are summarised as follows:-

- To the edge of a traffic lane – 200mm
- To an isolated obstruction in the centre of the carriageway or on a side reservation - 100mm
- To a kerb – 300mm
- To a continuous obstruction in the centre of the carriageway or on a side reservation - 600mm

4.2.3 In cases where the tramway is running integrated on-street (ie shared running with road traffic) then the relationship between the tramway and the traffic lanes will usually dictate that minimum passing clearance requirements given in 4.2.1 can not be simultaneously be combined with the minimum clearances given in 4.2.2.

4.2.4 The minimum dimensions to define the tramway path based on the Assumed Design Tram Vehicle are presented in Tables 4 and 5 in Appendix A of this Report.

4.2.5 In respect of the on-street running sections of the Edinburgh Tram Network and other locations where on site constraints mean that space is at a premium, the assumption at this stage of the scheme development is that slab track or other fixed trackforms will be used and so the dimensions in Tables 3,4 and 5 will be applicable. In cases where ballasted track is proposed, **a further allowance will need to be added** to account for the fact that ballasted track is not fixed and thus will tend to shift position (within set maintenance limits) during service. The use of ballasted track forms is a possibility for segregated running areas particularly for Line 2 of the Edinburgh Tram Network, this does not impact on the principle of the use of an Assumed Design Tram Vehicle as presented in this Report other than the need to add a further allowance as discussed above.

4.3 Assessment of Implications for design Developed Kinematic Envelope in Event that 100% low floor vehicle is chosen.

4.3.1 As has previously been explained the margin between the static envelope and the Developed Kinematic Envelope has the potential to be larger for a 100% low floor tram compared with a 70% low floor because of the way the 100% vehicles are configured and behave dynamically. The implications of this in relation to the Developed Kinematic Envelope produced by the Assumed Design Tram Vehicle are considered in Table 6 included in Appendix A of this Report.

4.3.2 Table 6 compares the static envelopes produced by both the "Flexity Swift" (The Assumed Design Tram Vehicle) and the "Citadis 302" an example of a current 100% low floor vehicle that is one of those in contention for Edinburgh. The widths for the "Citadis 302" have been increased to account for the fact that the AutoTRAM model used is only 2.4m wide compared with the 2.65m width required for Edinburgh.

4.3.3 The table illustrates that, as would be expected, (even with allowance for additional body width) the multi-articulated "Citadis 302" vehicle has a static envelope that is considerably smaller than that of the 70% low floor "Flexity Swift". However because of its likely dynamic behaviour the margin between the static envelope and Developed Kinematic Envelope for "Citadis 302" is likely to be more than the 150mm per side addition added to the static envelope of The Assumed Design Tram Vehicle.

4.3.4 Providing that the actual margins required for the Citadis 302 do not exceed the values indicated on the bottom lines of Table 6 then any design based on The Assumed Design Tram Vehicle would not be compromised by the adoption of a 100% low floor tram similar to the Citadis 302. As the Table demonstrates there is considerable scope for margin increase for lower radii though this reduces for larger curves.

4.4 Input to Tram Vehicle Procurement Process

4.4.1 This highlights the importance to ensure that the vehicle procurement process requires manufacturers supply dynamic profile data and dimensions of the Developed Kinematic Envelope associated with their vehicles (particularly any 100% low floor trams). This data should be sufficient and accurate to ensure that the actual Developed Kinematic Envelope values associated with proposed vehicles are not excessive in comparison with those assumed for the Design Tram Vehicle.

4.4.2 A copy of Table 3 should be included in the ITT document to be issued to the prospective tram vehicle suppliers. Tenderers will also be required to complete a blank version of the table, providing the same dimensions in relation to the vehicle they propose for the Edinburgh Tram Network and identifying values that are significantly larger than the Assumed Design Tram Vehicle. As part of the tender evaluation process for vehicle supply a comparison will be made of the Developed Kinematic Envelope dimensions for the proposed vehicles with the dimensions for the Assumed Design Vehicle.

4.4.3 This comparison will also include an assessment of the implications in respect of the completed Track and Infrastructure design and the extent of design change associated with a particular vehicle as well as the potential impact on identified alignment constraints along the route of the tramway.

5 APPLICABLE STANDARDS

5.1 General

5.1.1 The overriding requirements, standards and guidance applicable to this report are contained in:-

- Her Majesty's Railway Inspectorate's Railway Safety Principles and Guidance Part 2, Section G.
- Tram Requirements Specification Doc No ULE 90130–SW-SW-SPN-00059-V1.
- Geometric Requirements for Track: Edinburgh Tram.

6 APPENDIX A: TABLES

Table 1: Summary of Static Envelope Widths for Different Tram Types

Horizontal Radius (m)	25	30	40	50	70	90	100	200	300	500	1000	2000	Straight
Tram Type/ Dimension													
Siemens Sheffield "Duewag"													
CL to Static Envelope Outside of Curve	1.756	1.735	1.577	1.504	1.455	1.427	1.417	1.372	1.356	1.344	1.334	1.330	1.325
CL to Static Envelope Inside of Curve	1.746	1.677	1.587	1.534	1.474	1.441	1.429	1.377	1.360	1.346	1.335	1.330	1.325
OA Static Envelope Width	3.502	3.412	3.164	3.038	2.929	2.868	2.846	2.749	2.716	2.690	2.669	2.660	2.650
Bombardier "Flexity Swift"													
CL to Static Envelope Outside of Curve	1.835	1.688	1.539	1.499	1.452	1.425	1.415	1.371	1.356	1.343	1.334	1.330	1.325
CL to Static Envelope Inside of Curve	1.855	1.765	1.654	1.588	1.513	1.471	1.456	1.391	1.369	1.351	1.338	1.332	1.325
OA Static Envelope Width	[redacted]												2.650
Alstom Dublin "Citadis 401" 2.40m wide body													
CL to Static Envelope Outside of Curve	1.928	1.755	1.551	1.484	1.405	1.360	1.345	1.273	1.249	1.229	1.215	1.207	1.200
CL to Static Envelope Inside of Curve	1.507	1.452	1.390	1.351	1.308	1.283	1.275	1.237	1.225	1.215	1.208	1.204	1.200
OA Static Envelope Width	3.435	3.207	2.941	2.835	2.713	2.643	2.620	2.510	2.474	2.444	2.423	2.411	2.400
Alstom Montpellier "Citadis 301" 2.65m wide body													
CL to Static Envelope Outside of Curve	[redacted]												1.325
CL to Static Envelope Inside of Curve	1.629	1.579	1.514	1.475	1.433	1.409	1.401	1.362	1.350	1.340	1.333	1.329	1.325
OA Static Envelope Width	3.611	3.398	3.155	3.056	2.943	2.879	2.857	2.753	2.719	2.692	2.671	2.661	2.650
Siemens Houston "S70 LRV"													
CL to Static Envelope Outside of Curve	1.608	1.520	1.475	1.448	1.414	1.395	1.389	1.357	1.347	1.338	1.332	1.328	1.325
CL to Static Envelope Inside of Curve	1.785	1.709	1.610	1.554	1.487	1.452	1.438	1.382	1.361	1.347	1.336	1.331	1.325
OA Static Envelope Width	3.393	3.229	3.085	3.002	2.901	2.847	2.827	2.739	2.708	2.685	2.668	2.659	2.650
Alstom "Citadis 302" 100% low floor 2.40m wide body													
CL to Static Envelope Outside of Curve	1.349	1.326	1.295	1.277	1.255	1.243	1.239	1.220	1.213	1.208	1.204	1.202	1.200
CL to Static Envelope Inside of Curve	1.496	1.445	1.384	1.346	1.305	1.282	1.275	1.237	1.225	1.215	1.207	1.204	1.200
OA Static Envelope Width	2.845	2.771	2.679	2.623	2.560	2.525	2.514	2.457	2.438	2.423	2.411	2.406	2.400
Alstom "Citadis 302"100% low floor 2.65m wide body (these dimensions obtained by adding 125mm to the off-sets for the 2.40m wide tram)													
CL to Static Envelope Outside of Curve	1.474	1.451	1.420	1.402	1.380	1.368	1.364	1.345	1.338	1.333	1.329	1.327	1.325
CL to Static Envelope Inside of Curve	1.621	1.570	1.509	1.471	1.430	1.407	1.400	1.362	1.350	1.340	1.332	1.329	1.325
OA Static Envelope Width	3.095	3.021	2.929	2.873	2.810	2.775	2.764	2.707	2.688	2.673	2.661	2.656	2.650

Critical/Largest offset on Outside of the Curve Critical/Largest offset on Inside of the Curve [redacted]

Table 2: Tram Summary Details

Manufacturer	Model	Where Used/ Proposed	Body Width	Overall Length	Floor Configuration	Comments
Siemens	Duewag	Sheffield	2.65m	35.36m	70% Low	This was the design vehicle for Pre-SDS design. However this Tram is no longer available.
Bombardier	Flexity Swift	Merseytram	2.65m	29.65m	70% Low	It is anticipated (by PB) that a longer version of the Flexity Swift would be formed by adding a third body unit between the same front and rear units as used on the 29.65m long model. Thus static envelope figure would be similar with longer version.
Alstom	Citadis 401	Dublin	2.4m	40.81m	70% Low	Current Dublin Tram is 2.4m wide. Edinburgh version would need to be to be 2.65m. Thus the dimensions above might reasonably be expected to increase by 125mm, to each side, to reflect a 2.65m 40m tram. Alternatively the envelope produced by the Montpellier version of the Citadis that is 2.65m wide but 30m long could be considered as representative of the longer vehicle.
Alstom	Citadis 301	Montpellier	2.65m	29.826m	70% Low	40m versions of this vehicle are apparently now proposed for Montpelier though the AutoTRAM suite of vehicles features the 30m version.
Siemens	S70	Houston	2.65m	29.372m	70 % Low	70% low floor 3 car tram similar to that suggested by Siemens for Edinburgh.
Alstom	Citadis 302	Lyons/Bordeaux	2.40m	35.518m	100% Low	100% low floor version of Citadis, comprising 5 car vehicle. The AutoTRAM model represents 2.4m wide version. Edinburgh version would need to be to be 2.65m (see below).
Alstom	Citadis 302	?	2.65m	35.518m	100% Low	For **comparison purposes** only, the off-set dimensions for the 2.4m Citadis 302 have been increased by 125mm (to each side ie 250mm O/A) to illustrate the **potential** static envelope dimensions associated with a 2.65m wide version of this tram.

Table 3: Static Envelope and Developed Kinematic Envelope Dimensions (m) for Assumed Design Tram Vehicle on Slab Track or other fixed non-ballasted track types.

Horizontal Radius (m)	25	30	40	50	70	90	100	200	300	500	1000	2000	Straight
CL to Static Envelope Outside of Curve	1.835	1.688	1.539	1.499	1.452	1.425	1.415	1.371	1.356	1.343	1.334	1.330	1.325
CL to Static Envelope Inside of Curve	1.855	1.765	1.654	1.588	1.513	1.471	1.456	1.391	1.369	1.351	1.338	1.332	1.325
OA Static Envelope Width	3.690	3.453	3.193	3.087	2.965	2.896	2.871	2.762	2.725	2.694	2.672	2.662	2.650
CL to DKE Outside of Curve	1.985	1.838	1.689	1.649	1.602	1.575	1.565	1.521	1.506	1.493	1.484	1.480	1.475
CL to DKE Inside of Curve	2.005	1.915	1.804	1.738	1.663	1.621	1.606	1.541	1.519	1.501	1.488	1.482	1.475
OA DKE Envelope Width	3.990	3.753	3.493	3.387	3.265	3.196	3.171	3.062	3.025	2.994	2.972	2.962	2.950

Important

A copy of this table shall be included in the ITT document to be issued to the prospective tram vehicle suppliers. Tenderers will also be required to complete a blank version providing the same dimensions in relation to the vehicle they propose for the Edinburgh Tram Network and identifying values that are significantly larger than the Assumed Design Tram Vehicle. As part of the tender evaluation process for vehicle supply a comparison will be made of the Developed Kinematic Envelope dimensions for the proposed vehicles with the dimensions for the Assumed Design Vehicle.

This comparison will also include an assessment of the implications in respect of the Track and Infrastructure design and the extent of design change associated with a particular vehicle as well as the potential impact on identified alignment constraints along the route of the tramway.

Table 4: Minimum 2-way Tramway Path for Slab Track or other fixed non-ballasted track types with Centre Poles.
(Assuming 400mm max pole diameter and edge of tramway defined by kerbline)

Horizontal Radius (m)	25	30	40	50	70	90	100	200	300	500	1000	2000	Straight
CL of Track 1 to edge of tramway on Outside of Curve	2.285	2.138	1.989	1.949	1.902	1.875	1.865	1.821	1.806	1.793	1.784	1.780	1.775
CL of Track 1 to CL of Track 2	4.590	4.353	4.093	3.987	3.865	3.796	3.771	3.662	3.625	3.594	3.572	3.562	3.550
CL of Track 2 to edge of tramway on Inside of Curve	2.305	2.215	2.104	2.038	1.963	1.921	1.906	1.841	1.819	1.801	1.788	1.782	1.775
Overall Tramway Width	9.180	8.706	8.186	7.974	7.730	7.592	7.542	7.324	7.250	7.188	7.144	7.124	7.100

NB These dimensions are minimum based on Assumed Design Tram Vehicle and do not allow for any influence on passing clearances due to integration with traffic lanes. ie they are related primarily to a segregated tramway with Paved or Slab Track.
Table assumes edge of tramway is defined by kerbline. Where tramway edge is defined by other feature adjustment should be made to take account of appropriate clearance requirement from RSPG Pt2 Section G Ch 3 Para 110

Table 5: Minimum 2-way Tramway Path for Slab Track or other fixed non-ballasted track types with Side Poles or Span Wires.
(Assuming edge of tramway defined by kerbline)

Horizontal Radius (m)	25	30	40	50	70	90	100	200	300	500	1000	2000	Straight
CL of Track 1 to edge of tramway on Outside of Curve	2.285	2.138	1.989	1.949	1.902	1.875	1.865	1.821	1.806	1.793	1.784	1.780	1.775
CL of Track 1 to CL of Track 2	4.090	3.853	3.593	3.487	3.365	3.296	3.271	3.162	3.125	3.094	3.072	3.062	3.050
CL of Track 2 to edge of tramway on Inside of Curve	2.305	2.215	2.104	2.038	1.963	1.921	1.906	1.841	1.819	1.801	1.788	1.782	1.775
Overall Tramway Width	8.680	8.206	7.686	7.474	7.230	7.092	7.042	6.824	6.750	6.688	6.644	6.624	6.600

NB These dimensions are minimum based on Assumed Design Tram Vehicle and do not allow for any influence on passing clearances due to integration with traffic lanes. ie they are related primarily to a segregated tramway with Paved or Slab Track.
Table assumes edge of tramway is defined by kerbline. Where tramway edge is defined by other feature adjustment should be made to take account of appropriate clearance requirement from RSPG Pt2 Section G Ch 3 Para 110

Table 6: Assessment of Implications on Assumed Developed Kinematic Envelope in Event that 100% low floor vehicle is chosen for Edinburgh.

Horizontal Radius (m)	25	30	40	50	70	90	100	200	300	500	1000	2000	Straight
Assumed Design Tram Vehicle (Bombardier "Flexity Swift")													
CL to Static Envelope Outside of Curve	1.835	1.688	1.539	1.499	1.452	1.425	1.415	1.371	1.356	1.343	1.334	1.330	1.325
CL to Static Envelope Inside of Curve	1.855	1.765	1.654	1.588	1.513	1.471	1.456	1.391	1.369	1.351	1.338	1.332	1.325
100% low floor 2.65m wide tram (Alstom "Citadis 302" dimensions obtained by adding 125mm to the off-sets for the 2.40m wide tram)													
CL to Static Envelope Outside of Curve	1.474	1.451	1.420	1.402	1.380	1.368	1.364	1.345	1.338	1.333	1.329	1.327	1.325
CL to Static Envelope Inside of Curve	1.621	1.570	1.509	1.471	1.430	1.407	1.400	1.362	1.350	1.340	1.332	1.329	1.325
Difference between Static Envelope of Flexity Swift and 2.65m Citadis 302 with off sets widened by 125mm													
CL to Static Envelope Outside of Curve	0.361	0.237	0.119	0.097	0.072	0.057	0.051	0.026	0.018	0.010	0.005	0.003	0.000
CL to Static Envelope Inside of Curve	0.234	0.195	0.145	0.117	0.083	0.064	0.056	0.029	0.019	0.011	0.006	0.003	0.000
Largest potential margin between Static Envelope and Developed Kinematic Envelope for Citadis 302 if Developed Kinematic Envelope for Assumed Design Tram is not to be exceeded													
CL to Static Envelope Outside of Curve	0.511	0.387	0.269	0.247	0.222	0.207	0.201	0.176	0.168	0.160	0.155	0.153	0.150
CL to Static Envelope Inside of Curve	0.384	0.345	0.295	0.267	0.233	0.214	0.206	0.179	0.169	0.161	0.156	0.153	0.150

7 APPENDIX B: DETAILS OF DESIGN TRAM VEHICLE

AutoTrack Vehicle Details

Ref:

Vehicle Name: Type: Category: Classification: **MERSEYTRAM** Tram (Unspecified) (Unspecified)

Source:

Description:

Notes:

Unit 1 Name:	MERSEYTRAM Tractor
Unit 2 Name:	MERSEYTRAM Trailer 1
Unit 3 Name:	MERSEYTRAM Trailer 2

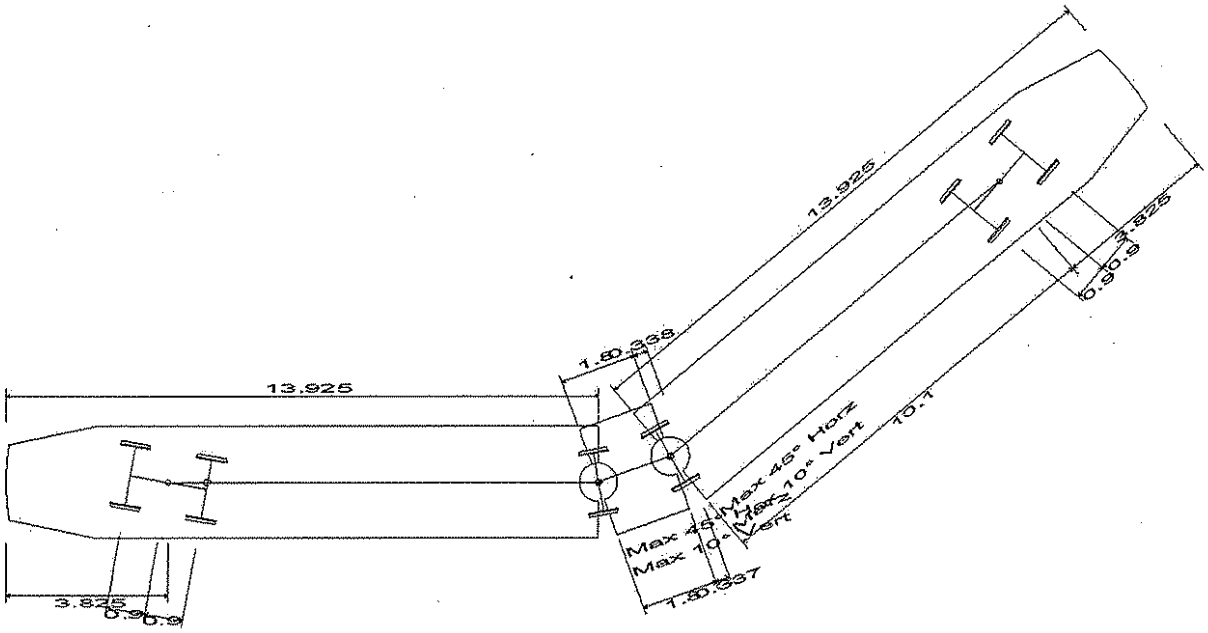

MERSEYTRAM

Overall Length	29.650m
Overall Width	2.650m
Overall Body Height	3.482m
Min Body Ground Clearance	0.157m
Track Width	1.435m

AutoTrack Vehicle Details Ref:

Unit Name:	**MERSEYTRAM Tractor**
Type:	Tram / guided unit (no steering)
Body style:	Light Rail Unit Front (Single Front Bogie)
Classification:	(Unspecified)
Source:	No data
Description:	No data
Notes:	No data
Datum:	Front Primary Axle
Front Axles:	2 Bogie (common axle pivot) (All axles identical)
Primary Front Axle Offset:	0.000m (Innermost Axle behind Front Primary Axle)
Effective Front Axle Offset:	-0.900m (Auto Calculated)
Maximum Wheel Angle:	Unlimited
Front Axle Spacing:	1.800m
Status:	Active Non Self-Steered
Rail Gauge:	1.435m
Total Wheels:	2 (positioned at the ends of the axle)
Wheel Thickness:	0.144m (Auto Calculated - proportion of Rail Gauge)
Wheel Diameter:	0.502m (Auto Calculated - proportion of Rail Gauge)
Rear Axles:	None
Front Coupling:	Generic
Coupling Offset:	0.000m (in front of Front Primary Axle)
Coupling Height:	0.718m (Auto Calculated - proportion of Tyre Diameter)
Capability:	Can tow or be towed
Max. Horizontal Articulation Angle:	90.000deg
Max. Vertical Articulation Angle:	0.000deg
Rear Coupling:	Generic
Coupling Offset:	9.200m (behind Front Primary Axle)
Coupling Height:	0.718m (Auto Calculated - proportion of Tyre Diameter)
Capability:	Can tow or be towed
Max. Horizontal Articulation Angle:	45.000deg
Max. Vertical Articulation Angle:	0.000deg
Body outline (plan):	
Outline Type:	Tram or rail car body
Offset (X,Y):	-4.725m, 0.000m
Length / Width:	13.925m / 2.650m
Front end Radius:	6.000m
Front taper Length / Width:	2.100m / 0.440m
Rear end Radius:	-0.450m
Rear taper Length / Width:	0.000m / 0.000m
Pantograph:	
Outline Type:	Rectangle
Offset (X,Y):	13.775m, 0.000m
Length / Width:	0.100m / 1.828m

AutoTrack Vehicle Details	**Ref:**
Unit Name:	**MERSEYTRAM Trailer 1**
Type:	Towbar
Body style:	Light Rail Unit Intermediate (Front and Rear Bogies)
Classification:	(Unspecified)
Source:	No data
Description:	No data
Notes:	No data
Datum:	Front Coupling
Maximum Articulation Angle:	45.000deg (to previous unit)
Front Axles:	1 Bogie (common axle pivot)
Primary Front Axle Offset:	0.000m (Innermost Axle behind Front Coupling)
Effective Front Axle Offset:	0.000m (Auto Calculated)
Maximum Wheel Angle:	Unlimited
Rear Axles:	1 Bogie (common axle pivot)
Primary Rear Axle Offset:	1.800m (Innermost Axle behind Front Coupling)
Effective Rear Axle Offset:	1.800m (Auto Calculated)
Maximum Wheel Angle:	Unlimited
Front Coupling:	Generic
Coupling Offset:	0.000m (in front of Front Coupling)
Coupling Height:	0.718m (Auto Calculated - proportion of Tyre Diameter)
Capability:	Can tow or be towed
Max. Horizontal Articulation Angle:	45.000deg
Max. Vertical Articulation Angle:	0.000deg
Rear Coupling:	Generic
Coupling Offset:	1.800m (behind Front Coupling)
Coupling Height:	0.718m (Auto Calculated - proportion of Tyre Diameter)
Capability:	Can tow or be towed
Max. Horizontal Articulation Angle:	45.000deg
Max. Vertical Articulation Angle:	0.000deg
Body outline (plan):	
Outline Type:	Tram or rail car body
Offset (X,Y):	0.000m, 0.000m
Length / Width:	1.800m / 2.650m
Front end Radius:	-0.450m
Front taper Length / Width:	0.000m / 0.000m
Rear end Radius:	-0.450m
Rear taper Length / Width:	0.000m / 0.000m

AutoTrack Vehicle Details	Ref:
Unit Name:	**MERSEYTRAM Trailer 2**
Type:	Tram / guided unit (no steering)
Body style:	Light Rail Unit Back (Single Rear Bogie)
Classification:	(Unspecified)
Source:	No data
Description:	No data
Notes:	No data
Datum:	Front Coupling
Maximum Articulation Angle:	45.000deg (to previous unit)
Front Axles:	None
Rear Axles:	2 Bogie (common axle pivot) (All axles identical)
Primary Rear Axle Offset:	9.200m (Innermost Axle behind Front Coupling)
Effective Rear Axle Offset:	10.100m (Auto Calculated)
Maximum Wheel Angle:	Unlimited
Rear Axle Spacing:	1.800m
Status:	Active Non Self-Steered
Rail Gauge:	1.435m
Total Wheels:	2 (positioned at the ends of the axle)
Wheel Thickness:	0.144m (Auto Calculated - proportion of Rail Gauge)
Wheel Diameter:	0.502m (Auto Calculated - proportion of Rail Gauge)
Front Coupling:	Generic
Coupling Offset:	0.000m (in front of Front Coupling)
Coupling Height:	0.718m (Auto Calculated - proportion of Tyre Diameter)
Capability:	Can tow or be towed
Max. Horizontal Articulation Angle:	45.000deg
Max. Vertical Articulation Angle:	0.000deg
Rear Coupling:	None
Body outline (plan):	
Outline Type:	Tram or rail car body
Offset (X,Y):	0.000m, 0.000m
Length / Width:	13.925m / 2.650m
Front end Radius:	-0.450m
Front taper Length / Width:	0.000m / 0.000m
Rear end Radius:	6.000m
Rear taper Length / Width:	2.100m / 0.440m

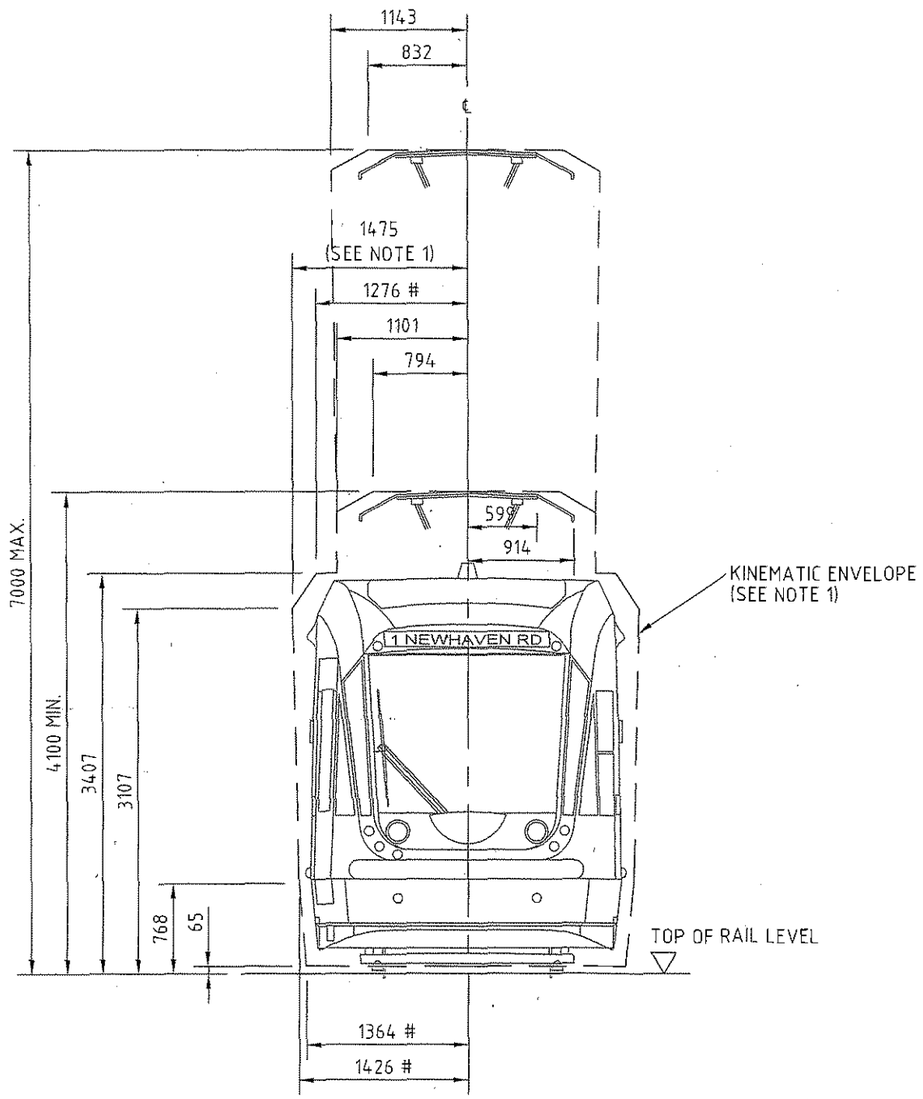

Developed Kinematic Envelope
Width In Curves

Horizontal Radius (m)	CL to DKE Outside of Curve (m)	CL to DKE Inside of Curve (m)	OA DKE Envelope Width (m)
25	1.985	2.005	3.990
30	1.838	1.915	3.753
40	1.689	1.804	3.493
50	1.649	1.738	3.387
70	1.602	1.663	3.265
90	1.575	1.621	3.196
100	1.565	1.606	3.171
200	1.521	1.541	3.062
300	1.506	1.519	3.025
500	1.493	1.501	2.994
1000	1.484	1.488	2.972
2000	1.480	1.482	2.962
Straight	1.475	1.475	2.950

6. THE ILLUSTRATED DIMENSIONS ASSUME THAT THE TRAMWAY WILL FEATURE A TRACKSLAB OR OTHER FIXED NON-BALLASTED TRACK TYPE. WHERE BALLASTED TRACK IS TO BE USED, THE DKE WILL BE INCREASED BY 20mm* (TO ACCOMMODATE TRACK MOVEMENT ETC.). CONSEQUENTLY THE TRACK SEPARATION AND TRAMWAY WIDTH DIMENSIONS WILL INCREASE BY 20mm* AND 40mm* RESPECTIVELY.
*PRELIMINARY VALUES TO BE CONFIRMED

NOTES

1. DRAWING ILLUSTRATES KINEMATIC ENVELOPE AND THUS STRAIGHT LINE DKE VALUES. THE CRITICAL STRAIGHT-LINE DIMENSION IS 1475mm. THE CORRSPONDING WIDTH IN CURVES ARE INDICATED ON THE TABLE. DIMENSIONS MARKED # WILL INCREASE BY SAME AMOUNT IN CURVES.

2. DRAWING ILLUSTRATES THE ANTICIPATED MAXIMUM AND MINIMUM PANTOGRAPH OPERATING HEIGHTS WITH CORRESPONDING KINEMATIC WIDTHS. THE KINEMATIC WIDTHS FOR PANTOGRAPH ARE NOT ANTICIPATED TO WIDEN IN CURVES OWING TO THE POSITION OF THE PANTOGRAPH ABOVE THE VEHICLE WHEELS.

3. ALL DIMENSIONS ARE IN MILLIMETRES UNLESS OTHERWISE STATED.

4. DWG HUMMINGBIERD REF: 24568

5. CLEARANCES FROM THE DKE ARE TO BE CALCULATED IN ACCORDANCE WITH HMRI'S RAILWAYS SAFETY PRINCIPLES AND GUIDANCE (RSPG) PART 2, SECTION G

6. DRG HUMMINGBIRD REF: 24568
PDF HUMMINBIRD REF: 30068

REV.	DESCRIPTION OF REVISION	DRN.	CHKD.	APP.	DATE
2	FOR TENDER PURPOSES ONLY	CC	MG	AJ	25/10/06
1	PRELIMINARY ISSUE FOR COMMENTS	CC	MG	AJ	05/04/06

DRAWING STATUS
For Tender Purposes Only

EDINBURGH TRAM

PARSONS BRINCKERHOFF
PARSONS BRINCKERHOFF
MANCHESTER TECHNOLOGY CENTRE
OXFORD ROAD
MANCHESTER M1 7ED

SYSTEM WIDE

ASSUMED DESIGN TRAM VEHICLE
DEVELOPED KINEMATIC ENVELOPE

DRAWN BY COXC	CHECKED BY GILLESPYM
APPROVED BY JORYA	ORIGINAL DRAWING SIZE A3
DATE 05/04/2006	SCALE(S)
DRAWING NUMBER ULE90130-SW-DRG-00038	REV. 2

USB00000086_0410

EDINBURGH TRAM NETWORK

Tender Query

No: 1005	**Date: 15-11- 07**
Query:	In the meeting with CAF in Edinburgh on 20.06.07 SDS requested the minimum length of straight track required in advance of the top of a tramstop platform ramp. The CAF response was given in their document *'Response to Minutes Edinburgh 200607'*, where a dimension of 5m was suggested, which corresponded to the distance from the tram leading point to the bogie centre, plus the length of the coupling. Please can CAF reconsider this, taking into account the following: 1. The coupler will normally be retracted 2. CAF's previous response is based on the assumption that the straight before the stop needs to be long enough to accommodate the end unit of the vehicle. Has consideration been given that the straight needs to be long enough to also accommodate the second unit of the vehicle? 3. The situation where a tram runs non-stop through a platform at a maximum speed of 35 km/h. 4. Normal tram operation, with the tram braking from the operational line speed to stop in the platform. 5. The standard boarding gap of 40mm will be required.
Response:	CAF has reviewed this value and, according to above point 2, the minimum length of strait track required in advance of the top of a tramstop platform ramp should be **6.75m** instead of 5m. This value is yield from the distance between pivot points of the second unit of the vehicle (6745mm) slightly increased. The rest of considerations (3, 4 and 5) are related to the Tender Query 1002, which will be answered shortly.

EDINBURGH TRAM NETWORK

Tender Query

No: 1007	Date: 10-1- 08
Query:	Resistance Curve In order to allow more accurate modelling of the system performance, please provide a train resistance curve for the tram, for each of the traction equipment supplier options.
Response:	If the infrastructural modelling can not give sufficient accurate results for the performance of the complete transportation system, the proposed propulsion equipment from Vossloh Kiepe is flexible to allows the fine tuning of the performances directly on the vehicle during the Commissioning phase of the Contract. For the calculations of the traction proprieties like air resistance the following curve was used:

$$\frac{R}{[N]} = 39.24 \times \frac{m}{[t]} + 0.463 \times \left(\frac{v}{[km/h]} \right)^2$$

R = Train Resistance
m = mass of the train
v = speed

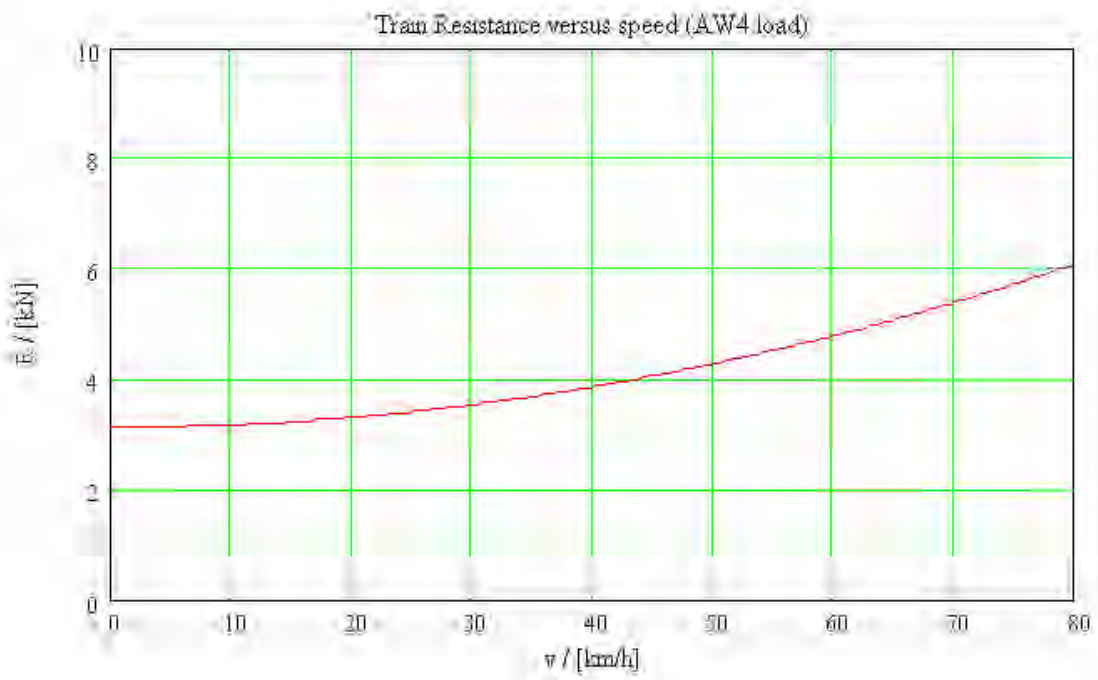

EDINBURGH TRAM NETWORK

Tender Query

No: 1008	Date: 10-1- 08
Query:	Kiepe Voltage characteristics In order to allow more accurate modelling of the system performance, please provide data of the Kiepe traction equipment showing the maximum and minimum voltages that the regenerative braking mode is active for. Please also confirm the minimum traction voltage that the Kiepe traction equipment will operate down to.
Response:	Vossloh Kiepe GmbH (VKD) will deliver the equipment compliant to the standard EN 50163 Part 7. The maximum and the minimum voltage of the Power Supply Line is settable, and are dependent on the requirement of the substations. Considering the standard EN 50163 the maximum may be 1000 V DC and the minimum 400 V DC. Considering the flexible proprieties of VKD – Equipment the minimum may be optionally also 350 V DC or lower (for example 60 V DC for wash facility) and the maximum 1095 V DC. The traction characteristics will change respectively. For your information, please find enclosed an extract from the standard EN 50163 Part 7, regarding the power supply

4.1 **Großbritannien**

Für bestehende Netze, die dieser Europäischen Norm entsprechen, müssen die Werte für die niedrigste nichtpermanente Spannung U_{min2} sein wie folgt (bei üblichen Betriebsbelastungen, bei denen aber die Stromversorgungseinrichtungen außerhalb der Produktnormen konstruiert sind):

- 400 V anstelle von 500 V im britischen DC 750 V-Netz mit dritter Schiene;
- 14 000 V im 25 000 V-Netz, kleinste Spannung, bei der ein Zug in der Lage sein muss, für bis zu 10 min weiterhin betrieben zu werden ohne Schaden zu nehmen;
- 12 500 V im 25 000 V-Netz, kleinste Spannung, bei der ein Zug in der Lage sein muss, für bis zu 2 min weiterhin betrieben zu werden ohne Schaden zu nehmen.

Bei bestehenden Netzen, bei denen es keine Einrichtung für feine Spannungsregelung gibt, darf U_{max1} überschritten werden.

Datenbankausdruck aus „VDE-Vorschriftenwerk auf CD-ROM". Verwendung nur gemäß Nutzungsvertrag. Alle Rechte vorbehalten.

4 Spannungen und Frequenzen von Bahnstromsystemen

4.1 Spannungen

Die Kennwerte der wichtigsten Spannungssysteme (mit Ausnahme der Überspannungen) sind in Tabelle 1 angegeben.

Tabelle 1 – Nennspannungen und ihre zulässigen Grenzen bezüglich Werten und Dauer

Stromversorgungssystem	Niedrigste nichtpermanente Spannung U_{min2} V	Niedrigste Dauerspannung U_{min1} V	Nennspannung U_n V	Höchste Dauerspannung U_{max1} V	Höchste nichtpermanente Spannung U_{max2} V
Gleichstrom (Mittelwerte)	400	400	600	720	800
	500[a]	500	750	900[a]	1 000[a]
	1 000	1 000	1 500	1 800	1 950
	2 000	2 000	3 000	3 600	3 900
Wechselstrom (Effektivwerte)	11 000	13 000	15 000	17 250	18 000
	17 500[b]	19 000[c]	25 000	27 500[c]	29 000
Besondere nationale Bedingungen auf Frankreich siehe Anhang B					

[a] Für künftige Gleichstrom-Bahnnetze für Straßenbahnen und Nahverkehrsbahnen sollten Nennspannungen von 750 V, 1 500 V oder 3 000 V verwendet werden.

[b] Besondere nationale Bedingungen auf Belgien siehe Anhang B.

[c] Besondere nationale Bedingungen auf das Vereinigte Königreich siehe Anhang B.

Die folgenden Anforderungen müssen erfüllt werden:

a) Die Dauer der Spannung zwischen U_{min1} und U_{max2} darf 2 min nicht übersteigen.

b) Die Dauer der Spannung zwischen U_{max1} und U_{max2} darf 5 min nicht übersteigen.

c) Die Spannung an der Sammelschiene des Unterwerks darf im Leerlauf U_{max1} nicht überschreiten. Bei Gleichstrom-Unterwerken darf diese Spannung im Leerlauf U_{max2} betragen, wobei vorausgesetzt wird, dass die Spannung am (an den) Stromabnehmer(n) eines Zuges der Tabelle 1 und ihren Anforderungen entspricht.

d) Unter bestimmungsgemäßen Betriebsbedingungen muss die Spannung im Bereich $U_{min1} \leq U \leq U_{max2}$ liegen.

e) Unter außergewöhnlichen Betriebsbedingungen dürfen Spannungen im Bereich $U_{max2} \leq U \leq U_{min1}$ in Tabelle 1 keine Beschädigungen oder Ausfälle verursachen.

ANMERKUNG 1 Der Einsatz von Einrichtungen zur Leistungsbegrenzung auf Triebfahrzeugen kann das Auftreten von Unterspannung an der Fahrleitung begrenzen (siehe EN 50388).

EDINBURGH TRAM NETWORK

Tender Query

No: 1009	**Date: 07-02-08**
Query:	When the tram is stabled with the pantograph raised is it possible to turn off the saloon and cab heating?
Response:	Yes, this is considered in these HV saloon and HVAC cab systems specification: The proposed HV Saloon system will present a selector switch in the Cab with: - Disconnection - Ventilation - Automatic (ventilation / heating) - Heating The proposed HVAC Cab system will also present a selector switch in the Cab with: - Disconnection - Ventilation In addition, this Cab equipment will incorporate a Cab temperature regulation selector (ranging from 18Celsius to 26Celsius)

Document Type: **Technical Specification**

Identif.: TS6/3135E	Issue: 1	Date: 14-03-2008

Title: CABIN EQUIPMENT FOR HVAC EDIMBURG TRAMWAY

COPYRIGHT BY MERAK Sistemas Integrados de Climatización MADRID (SPAIN).
Copying of this document and/or use of the contents are forbidden without permission from Merak Sistemas Integrados de Climatización all rights are reserved in the event of patent granting or registration.

Factory
Parque Empresarial La Carpetania
Miguel Faraday 1
28906 Getafe, Madrid - Spain
Tel.: 34 91 495 90 00
Fax: 34 91 691 09 97
merak@merak-hvac.com

CONTROL OF ISSUES AND MODIFICATIONS

ISSUE	DATE	MODIFICATIONS
0	14-01-2008	Basic Issue
1	14-03-2008	Revised according to CAF EEFAE

0	14-03-2008	P. Barandalla	B.Paradela
0	14-01-2008	P. Barandalla	B.Paradela
ISSUE	**DATE**	**MADE BY**	**APPROVED**

INDEX

1 Introduction 1

2 Requirements 2

2.1 Scope of Supply 2
2.2 Design Conditions 2
2.2.1 Thermal design data 3

3 Thermal Analysis and Calculations 4

3.1 Heating Capacity 4
3.2 Cooling Capacity 4

4 Heating and Cooling Capacity Calculations 5

4.1 Heating Estimate 5
4.2 Cooling Estimate 6

5 GENERAL DESCRIPTION OF EQUIPMENT 7

6 Specific Description Equipment 8

6.1 HVAC unit 8
6.2 Control panel 8
6.3 Components - Specification 9
6.3.1 Compressor 9
6.3.2 Condenser Coil 9
6.3.3 Condenser fan and motor unit 9
6.3.4 Evaporator coil 9
6.3.5 Thermostatic Expansion Valve 10
6.3.6 Filter / Drier 10
6.3.7 Drain Pan 10
6.3.8 Evaporator Fan and Motor 10
6.3.9 Air Filters 10
6.3.10 Air Heating 10
6.3.11 Frame 11
6.3.12 Command panel 11

7 Air distribution 12

7.1 Fresh air 12
7.2 Return air 12
7.3 Supply air 12

8 Electrical controls 13

9 Power requirements 14

9.1 Normal cooling mode 14
9.2 Heating mode 14
9.3 Ventilation mode. 15

10 Drawings 16

1 Introduction

MERAK has a long history of association with the railway industry and has supplied similar air conditioning systems world-wide. For information, we can provide a copy of our reference list, which gives the schedule of our experience.

MERAK is able to call on this wide experience to offer equipment capable of reliable operation under the arduous operating conditions that are synonymous with railway transportation systems.

The HVAC system we are offering has the following essential characteristics:

1. Secure and Reliable performance
2. Service proven components
3. Minimum weight commensurate with robust construction
4. High efficiency
5. Future proof, environmentally friendly refrigerant R407C
6. Microprocessor based controls
7. Efficient thermal and acoustic insulation

2 Requirements

2.1 Scope of Supply

For the HVAC Cabin system, our offer covers the following main scope of supply per cabin:

1 Cabin Compact unit for cabin.

1 kit of plug connectors for unit.

2.2 Design Conditions

The equipment design has been based on the requirements specified in EN-14813-1/2 The design parameters are summarized in the tables below, base on most loaded car .

Dry Bulb Temp. Exterior ºC	Dry Bulb Temp. Inside ºC	Passenger Load
-10	22	0

Table 1 Heating Design Data

Dry Bulb Temp. Exterior ºC	Relative Humidity % RH Exterior	Dry Bulb Temp. Inside ºC	Relative Humidity % RH Interior	Passenger Load
Condenser Inlet Temperature 40ºC				
28	80	24	40	1

Table 2 Cooling Design Data

The fresh air airflow will be 30 m^3/h per cabin.

2.2.1 Thermal design data

Average Transmission factor	3.5 W/m^2 Summer 3.7 W/m^2 Winter
Solar transmission factor frontal window	57 %
Solar transmission factor side window	57%
Solar Radiation	600 W/m^2
Lighting / electric load	500 W
Supply air fan motor load	0,3 kW
Surface temperature due to solar radiation: Roof Side Walls Where: Te = Ambient Temperature	 Te + 25ºC Te + 16ºC

3 Thermal Analysis and Calculations

3.1 Heating Capacity

The heating calculations show a maximum heating requirement of approximately 3 kW for the car.

Based in our experience Merak offers HVAC Cabin unit with an air heating capacity of 3.5 kW that fulfills with requirements, having 0.5 kw more than calculations to improve performances as preheating time.

3.2 Cooling Capacity

The cooling calculations show a maximum cooling requirement of approximately 3.7 kW.

Based in our experience Merak offers HVAC Cabin unit with an air cooling capacity of 4 kW that fulfills with requirements,

4 Heating and Cooling Capacity Calculations

4.1 Heating Estimate

DESIGN PARAMETERS

AMBIENT CONDITIONS WINTER

		T_{DB} [°C]
Outside		-10,0
Inside		22,0
Vestibule		-10,0

VENTILATION

Number of persons		1
Air flow / person	[m³/h]	30,00
Total air flow	[m³/h]	30

HEATING ESTIMATES

TRANSMISSION LOSS

	Area [m²]	k [W/m²/K]	ΔT [K]	Sensible heat [W]
Side wall comfort area	7,20	3,70	-32,0	-852
Side wall vestibule				
End wall 1	8,40	3,70	-32,0	-995
End wall 2	6,50	3,70	-4,0	-96
Roof comfort area	1,33	3,70	-32,0	-157
Roof vestibule				
Floor comfort area	5,30	3,70	-32,0	-628
Floor vestibule				
				-2728

INTERNAL GAIN

	Quantity	Efficiency [%]	S.H./unit [W]	Sensible heat [W]
Lights / internal heat sources		0	500,00	0
Evaporator fan motor(s)		0	300,00	0
Heat emission persons	1	0	83,15	0
				0

INFILTRATION LOSS

	Air flow [m³/h]	ΔT [K]	Sensible heat [W]
Infiltrations	0	-32,0	0
			0

VENTILATION LOSS

	Air flow [m³/h]	ΔT [K]	Sensible heat [W]
Fresh air	30	-32	-321
			-321

RESULTS

OVERVIEW LOSSES

	Total heat [W]
Transmission	2728
Internal	0
Infiltrations	0
Ventilation	321
Total	**3049**

4.2 Cooling Estimate

DESIGN PARAMETERS

AMBIENT CONDITIONS SUMMER

	T_{DB} [°C]	R.H. [%]	S.H. [g/kg]	Solar radiation [W/m²]
Outside	28,0	80	19,09	600
Inside	24,0	40	7,40	
Vestibule	24,0			

VENTILATION

Number of persons		1
Air flow / person	[m³/h]	30,00
Total air flow	[m³/h]	30

COIL DESIGN

Bypass factor	[%]	15

COOLING ESTIMATES

SOLAR HEAT GAIN

	Area [m²]	Factor [%]	k [W/m²/K]	ΔTsurface [K]	Intensity [W/m²]	Sensible heat [W]	Latent heat [W]
Side wall windows	1,00	57			600	342	
Side wall (no windows)	2,60		3,50	16,0		146	
End wall windows	3,72	57			600	1272	
End wall (no windows)	4,68		3,50	16,0		262	
Roof	1,33	80	3,50	25,0		93	
						2115	**0**

TRANSMISSION GAIN

	Area [m²]	k [W/m²/K]	ΔT [K]	Sensible heat [W]	Latent heat [W]
Side wall comfort area	7,20	3,50	4,0	101	
Side wall vestibule					
End wall 1	8,40	3,50	4,0	118	
End wall 2	6,50	3,50	4,0	91	
Roof comfort area	1,33	3,50	4,0	19	
Roof vestibule					
Floor comfort area	5,30	3,50	4,0	74	
Floor vestibule					
				402	**0**

INTERNAL GAIN

	Quantity	Efficiency [%]	S.H./unit [W]	L.H./unit [W]	Sensible heat [W]	Latent heat [W]
Lights / internal heat sources		100	500,00	0,00	500	0
Evaporator fan motor(s)		100	300,00	0,00	300	0
Heat emission persons	1	100	73,97	42,22	74	42
					874	**42**

INFILTRATION GAIN

	Air flow [m³/h]	ΔT [K]	ΔS.H. [g/kg]	BF [%]	Sensible heat [W]	Latent heat [W]
Infiltrations	0	4,0	11,69		0	0
Fresh air	30	4,0	11,69	15	6	43
					6	**43**

VENTILATION GAIN

	Air flow [m³/h]	ΔT [K]	ΔS.H. [g/kg]	1- BF [%]	Sensible heat [W]	Latent heat [W]
Fresh air	30	4,0	11,69	85	34	244
					34	**244**

RESULTS

OVERVIEW HEAT GAINS

	Sensible [W]	Latent [W]	Total [W]
Solar heat	2115	0	2115
Transmission	402	0	402
Internal	874	42	916
Ventilation+infiltration	40	287	328
Total	3431	330	**3761**

AIRFLOWS

Fresh air	[m³/h]	30
Return air	[m³/h]	773
Treated air	[m³/h]	**803**

TEMPERATURES

Mixed air	[°C]	24,1
ADP	[°C]	**9,3**

5 GENERAL DESCRIPTION OF EQUIPMENT

The offered HVAC Cabin unit it is based on a range of similar units that MERAK has supplied to the railway industry over a number of years.

The Cabin HVAC unit will be rated to provide 4 kW of cooling capacity when operating under the specified design conditions. The calculated cooling requirements are given in section 4.

This unit is to be mounted on the roof and located at both ends of the tramway.

The Cabin HVAC unit is provided with 3.5 kW of air heat to cater for winter operation. The calculated heating requirements are also enclosed in section 4.

The unit frame is fabricated from painted carbon steel.

The cabin internal thermal comfort is controlled by a microprocessor based control provided on a common control rack mounted inside the unit.

Apart of the thermostatic control functions (in conjunction with the temperature sensors, the microprocessor also provides control intelligence and timing functions.

6 Specific Description Equipment

6.1 HVAC unit

The principal components of the Cabin HVAC unit are as follows:

Compressor – 1
Condenser fan / motor unit – 1
Evaporator blower assembly – 1
Evaporator coil – 1
Heater assembly – 1
Condenser coil – 1
Refrigerant filter drier – 1
Expansion valve – 1
Liquid line solenoid valve – 1
Air Filter – 1

The unit internal arrangement is divided into 2 basic sections viz.:

Condenser section

Comprising the compressor, condenser coils with axial type condenser fan and motor unit, safety switches, filter/drier unit, etc.

Condenser air is drawn in from the side through the coil and discharged vertically downwards by the fans.

Evaporator Section

The evaporator section comprises, evaporator fan-motor, evaporator coil with expansion valve, refrigeration controls, air heater and condensate water drainage tray. The air is blown out at frontal of the unit.

6.2 Control panel

The Cabin HVAC unit will contain the control panel with the electromechanical AC contactors, relays etc. necessary for the switching of the unit.

The electronic temperature control by microprocessor will be installed inside the unit.

6.3 Components - Specification

6.3.1 Compressor

Type	Hermetic piston
Manufacturer	Maneurop
Inrush current	30 A
Voltage	400V 3ph 50Hz
Refrigerant	R-407C

6.3.2 Condenser Coil

Tube/Fin Material	Cu/Al
Framework	Stainless Steel
Fins pitch	3.5 mm
Fins thickness	0.18 mm
Tubes	3/8” diameter (1 inch equilateral pitch)
Refrigerant	R-407C

6.3.3 Condenser fan and motor unit

Fan characteristics:

Type	Axial – multi-blade

Motor characteristics:

Type	Totally enclosed air-stream rated
Voltage	400V 3ph 50Hz
RPM	1.500
Inrush current	10 Amp
Insulation	IP-56, Class F
Standard	EN 60349-2
Thermal protection	Internal auto-reset thermostats

6.3.4 Evaporator coil

Tube/Fin Material	Cu/Al
Framework	Stainless Steel
Fins pitch	2.54 mm
Fins thickness	0.18 mm
Tubes	3/8” diameter (1 inch equilateral pitch)
Refrigerant	R-407C

6.3.5 Thermostatic Expansion Valve

Type	Welded connection with External equalizer
Refrigerant	R-407C

6.3.6 Filter / Drier

Type	Welded connection.
Capacity	according to ARI norm ARI-710-64

6.3.7 Drain Pan

Condensate water at the evaporator coil is drained into Stainless Steel fabricated pan. The drain pan has two drainage points, which drain from the bottom of the unit to the car-builders connection.

Drain pans are suitably baffled to prevent spillage due to train motion and are insulated to prevent condensation.

6.3.8 Evaporator Fan and Motor

Fan characteristics:

Type	centrifugal single inlet

Motor characteristics:

Type	Totally enclosed air-stream rated
Voltage	400V 3ph 50Hz
RPM	1000
Inrush Current	7.5 amp
Insulation	IP 54, Class F
Standard	EN 60349-2
Thermal protection	Internal auto-reset thermostats.

6.3.9 Air Filters

Type	Comercial disposable
Clasification	G4 (EN779)

6.3.10 Air Heating

Type	Stainless Steel elements
Voltage	400V 3ph 50Hz
Capacity	3,5 kW

6.3.11 Frame

Painted zincor Steel

6.3.12 Command panel

The panel is fitted in the cabin providing and easy access to the driver.

With this panel the driver will be able to control manually the start and stop of the HVAC unit and the interior temperature in a range of ± 3ºC from set temperature.

7 Air distribution

This chapter will try to describe the air distribution principal proposed by MERAK. This duct system do not belong to Merak's scope of supply, but we will provide the car builder with all the necessary information to design this duct system.

7.1 Fresh air

The fresh air inlet grill is located in the sidewall of the unit.

7.2 Return air

The return air is taken from the cabin by the inlet under the unit.

7.3 Supply air

The supply air is distributed to the car through the cabin ceiling by the frontal of the unit.

8 Electrical controls

The control system has been designed as an integral part of the air conditioning system of the HVAC cabin unit and is based on a microprocessor, which is the heart of the system.

The microprocessor provides control of all the normal functions i.e. cooling, heating and ventilation.

Thermostatic functions are controlled by the microprocessor in association with temperature sensors mounted in the return air, supply air stream and fresh air intake of the unit.

System monitoring and fault diagnosis is provided by the microprocessor to an RS 232 outlet that can be accessed with the aid of a laptop computer (PTU) and the appropriate software (provided by MERAK under separate order).

Controls are selected for operation from battery supply to ensure stable operation.

The Cabin HVAC microprocessor control is mounted inside the cabin HVAC unit.

Electrical switchgear, (contactors, circuit breakers and relays) are mounted on the control panel inside the cabin unit. The contactors, circuit breakers and relays are manufactured per IEC norms.

9 Power requirements

The power requirements for the equipment are detailed below:

9.1 Normal cooling mode

Item	Per HVAC Cabin		
	Battery	400V 3ph 50Hz	
	kW	kW	kVA
Compressor motor	-	2	2.8
Condenser fan motors	-	0.3	0.4
Evaporator fan motors	-	0.25	0.36
Controls	0.15	-	-
Totals	0.15	2.55	3.56

9.2 Heating mode

Item	Per HVAC Cabin		
	Battery	400V 3ph 50Hz	
	kW	kW	kVA
Evaporator fan motor	-	0.25	0.36
Heaters	-	3.5	3.5
Controls	0.15	-	-
Totals	0.15	3.75	3.86

9.3 Ventilation mode.

Item	Per HVAC Cabin		
	Battery	400V 3ph 50Hz	
	kW	kW	kVA
Evaporator fan motor	-	0.25	0.36
Controls	0.15	-	-
Totals	0.15	0.25	0.36

10 Drawings

Item	Document Reference	Weight
Dimensional outline drawing of Cabin HVAC unit	L-0050303	165 Kg ± 5%

Document Type: **Technical Specification**

Identif.: TS6/3134E	Issue: 1	Date: 14-03-2008

Title: PASSENGER AREA HV EQUIPMENT FOR EDIMBURG TRAMWAY

COPYRIGHT BY MERAK Sistemas Integrados de Climatización MADRID (SPAIN).
Copying of this document and/or use of the contents are forbidden without permission from Merak Sistemas Integrados de Climatización all rights are reserved in the event of patent granting or registration.

Factory
Parque Empresarial La Carpetania
Miguel Faraday 1
28906 Getafe, Madrid - Spain
Tel.: 34 91 495 90 00
Fax: 34 91 691 09 97
merak@merak-hvac.com

CONTROL OF ISSUES AND MODIFICATIONS

ISSUE	DATE	MODIFICATIONS
0	14-01-2008	Basic Issue
1	14-03-2008	Revised according to CAF EEFAE

0	14-03-2008	P. Barandalla	B.Paradela
0	14-01-2008	P. Barandalla	B.Paradela
ISSUE	**DATE**	**MADE BY**	**APPROVED**

INDEX

1 Introduction 1
2 Requirements 2
2.1 Scope of Supply 2
2.2 Design Conditions 2
2.2.1 Thermal design data 3
3 Thermal Analysis and Calculations 4
3.1 Heating Capacity 4
3.2 Ventilation 4
4 Heating Calculations 5
4.1 Heating Estimate 5
4.2 Ventilation Estimate 6
5. GENERAL DESCRIPTION OF EQUIPMENT 7
5 Specific Equipment Description 8
5.1 HV unit 8
5.2 Control panel 8
5.3 Components - Specification 8
5.3.1 Fan Motors 8
5.3.2 Air Filters (fresh and return air) 8
5.3.3 Air Heating 9
5.3.4 Frames 9
5.3.5 Exhaust Motors 9
6 Air Distribution 10
6.1 Fresh air 10
6.2 Return air damper. 10
6.3 Return air 10
6.4 Supply air 10
7 HV system working modes 11
7.1 Temperature regulation: 11
7.1.1 Heating mode: 11
7.1.2 Ventilation mode. 11
7.2 Degraded mode: 11
8 Electronic control 12
8.1 Introduction 12
8.2 Microprocessor Description 13
8.2.1 General 13
8.2.2 Microprocessor Specification 14
9 Power requirements 15
9.1 Normal heating mode. 15
9.2 Ventilation mode 15
10 Drawings 16

1 Introduction

MERAK has a long history of association with the railway industry and has supplied similar air conditioning systems world-wide. For information, we can provide a copy of our reference list, which gives the schedule of our experience.

MERAK is able to call on this wide experience to offer equipment capable of reliable operation under the arduous operating conditions that are synonymous with railway transportation systems.

The HV system we are offering has the following essential characteristics:

1. Secure and Reliable performance
2. Service proven components
3. Minimum weight commensurate with robust construction
4. High efficiency
5. Future proof, environmentally friendly refrigerant R407C
6. Microprocessor based controls
7. Efficient thermal and acoustic insulation

2 Requirements

2.1 Scope of Supply

For the HV system, our offer covers the following main scope of supply per Tramway:

	Qty / Tram
Passenger area HV unit	3
Kit of plugs for pass. Area HV unit	3
Exhaust motors	4
Control Rack	1
Kit of plugs for Cntrol Rack	1

2.2 Design Conditions

The equipment design has been based on the requirements specified in EN-14750-1/2

The design parameters are summarized in the tables below, based on the tramway:

Dry Bulb Temp. Exterior ºC	Dry Bulb Temp. Inside ºC	Passenger Load
-10	18	0

Table 1 Heating Design Data

The fresh air airflow will be 8 m^3/h per passenger. Total 2000 m^3/h per Tramway.

Dry Bulb Temp. Exterior ºC	Relative Humidity % RH Exterior	Passenger Load
28	45	250

Table 2 Ventilation Design Data

The fresh air airflow will be 30 m^3/h per passenger. Total 7500 m^3/h per Tramway.

2.2.1 Thermal design data

Average Transmission factor	3.5 W/m^2 summer 3.7 W/m^2 summer
Solar transmission factor	57 %
Solar Radiation	600 W/m^2
Lighting / electric load	2 kW / Tram
Supply air fan motor load	3 kW / Tram
Surface temperature due to solar radiation:	
Roof	Te + 25ºC
Side Walls	Te + 16ºC
Where: Te = Ambient Temperature	

3 Thermal Analysis and Calculations

3.1 Heating Capacity

The heating calculations show a maximum heating requirement of approximately 59.6 kW for the Tramway.

Each HV unit will have an air heating capacity of 20 kW to cover the fresh air and transmissions.

The foreseen heating capacity of 60 kw , will cover the Tramway needs, ensuring the requested performance at design conditions.

3.2 Ventilation

The ventilation calculations show a maximum internal temperature of 34.9 ºC with full occupancy and full radiation at 28ºC of ambient temperature.

4 Heating Calculations

4.1 Heating Estimate

DESIGN PARAMETERS

AMBIENT CONDITIONS WINTER

		T_{DB} [°C]
Outside		-10,0
Inside		18,0
Vestibule		18,0

VENTILATION

Number of persons		250
Air flow / person	[m³/h]	8,00
Total air flow	[m³/h]	2000

HEATING ESTIMATES

TRANSMISSION LOSS

	Area [m²]	k [W/m²/K]	ΔT [K]	Sensible heat [W]
Side wall comfort area	191,50	3,70	-28,0	-19839
Side wall vestibule				
End wall 1	6,63	3,70	0,0	0
End wall 2	6,63	3,70	0,0	0
Roof comfort area	101,50	3,70	-28,0	-10515
Roof vestibule				
Floor comfort area	101,50	3,70	-28,0	-10515
Floor vestibule				
				-40869

INTERNAL GAIN

	Quantity	Efficiency [%]	S.H./unit [W]	Sensible heat [W]
Lights / internal heat sources		0	1500,00	0
Evaporator fan motor(s)		0	3000,00	0
Heat emission persons	250	0	101,50	0
				0

INFILTRATION LOSS

	Air flow [m³/h]	ΔT [K]	Sensible heat [W]
Infiltrations	0	-28,0	0
			0

VENTILATION LOSS

	Air flow [m³/h]	ΔT [K]	Sensible heat [W]
Fresh air	2000	-28	-18753
			-18753

RESULTS

OVERVIEW LOSSES

	Total heat [W]
Transmission	40869
Internal	0
Infiltrations	0
Ventilation	18753
Total	**59623**

4.2 Ventilation Estimate

DESIGN PARAMETERS

AMBIENT CONDITIONS SUMMER

	T_{DB} [ºC]	R.H. [%]	S.H. [g/kg]	Solar radiation [W/m²]
Outside	28,0	45	10,59	600
Inside	34,9	30	15,22	
Vestibule	37,0			

VENTILATION

Number of persons		250
Air flow / person	[m³/h]	30,00
Total air flow	[m³/h]	7500

COIL DESIGN

Bypass factor	[%]	15

COOLING ESTIMATES

SOLAR HEAT GAIN

	Area [m²]	Factor [%]	k [W/m²/K]	ΔTsurface [K]	Intensity [W/m²]	Sensible heat [W]	Latent heat [W]
Side wall windows	27,04	57			600	9248	
Side wall (no windows)	68,71		3,50	16,0		3848	
End wall windows							
End wall (no windows)	6,63		3,50	16,0		371	
Roof	101,50	80	3,50	25,0		7105	
						20571	**0**

TRANSMISSION GAIN

	Area [m²]	k [W/m²/K]	ΔT [K]	Sensible heat [W]	Latent heat [W]
Side wall comfort area	191,50	3,50	-6,9	-4639	
Side wall vestibule					
End wall 1	6,63	3,50	-8,9	-207	
End wall 2	6,63	3,50	-8,9	-207	
Roof comfort area	101,50	3,50	-6,9	-2458	
Roof vestibule					
Floor comfort area	101,50	3,50	-6,9	-2458	
Floor vestibule					
				-9969	**0**

INTERNAL GAIN

	Quantity	Efficiency [%]	S.H./unit [W]	L.H./unit [W]	Sensible heat [W]	Latent heat [W]
Lights / internal heat sources		100	200,00	0,00	200	0
Evaporator fan motor(s)		100	3000,00	0,00	3000	0
Heat emission persons	250	100	14,32	113,81	3580	28453
					6780	**28453**

INFILTRATION GAIN

	Air flow [m³/h]	ΔT [K]	ΔS.H. [g/kg]	BF [%]	Sensible heat [W]	Latent heat [W]
Infiltrations	0	-6,9	-4,63		0	0
Fresh air	7500	-6,9	-4,63	15	-2607	-4268
					-2607	**-4268**

VENTILATION GAIN

	Air flow [m³/h]	ΔT [K]	ΔS.H. [g/kg]	1- BF [%]	Sensible heat [W]	Latent heat [W]
Fresh air	7500	-6,9	-4,63	85	-14775	-24184
					-14775	**-24184**

RESULTS

OVERVIEW HEAT GAINS

	Sensible [W]	Latent [W]	Total [W]
Solar heat	20571	0	20571
Transmission	-9969	0	-9969
Internal	6780	28453	35233
Ventilation+infiltration	-17382	-28452	-45834
Total	0	0	**0**

AIRFLOWS

Fresh air	[m³/h]	7500
Return air	[m³/h]	---
Treated air	[m³/h]	---

TEMPERATURES

Mixed air	[ºC]	---
ADP	[ºC]	---

5. GENERAL DESCRIPTION OF EQUIPMENT

The offered HV system it is based on a range of similar systems that MERAK has supplied to the railway industry over a number of years.

The HV system that we recommend to be installed per Tramway is composed of the following main components:

- 3 HV unit
- 4 exhaust motors
- 1 Electronic Control Rack

This unit is to be mounted on the roof.

The HV system is provided with 60 kW of overhead heating capacity, which will cater for winter operation. The calculated heating requirements are also detailed in section 4 of this technical specification.

The unit frame is manufactured in non painted stainless steel.

The Tramway internal thermal comfort is controlled by a microprocessor based temperature controller installed on a common control rack mounted inside the tramway that controls the 3 HV units.

Apart of the thermostatic control functions (in conjunction with the temperature sensors), the microprocessor controller also provides control intelligence and timing functions.

5 Specific Equipment Description

5.1 HV unit

The principal components of the HV unit are as follows:

Evaporator blowers – 2
Heater assembly – 2
Return air damper – 1
Fresh air damper – 2
Fresh Air Filter – 2

5.2 Control panel

The control panel will contain the command elements like electromechanical AC contactors, relays etc. necessary for the HV system. The protection high voltage circuit breakers are to be installed by the Tramway builder and do not belong to our scope of supply.

This panel will be located within the HV unit.

5.3 Components - Specification

5.3.1 Fan Motors

Fan characteristics:

Type	centrifugal single inlet

Motor characteristics:

Type	Asynchronous
Voltage	400V 3ph 50Hz
Inrush current	9.8 Amp
Insulation	Class F
Protection	IP 54
Thermal protection	Internal auto-reset thermostats.

5.3.2 Air Filters (fresh and return air)

Type	Disposable
Classification	G4 (EN779)

5.3.3 Air Heating

Type	Stainless Steel elements
Voltage	750 Vdc
Heating power	13000 + 7000
Stages:	2

5.3.4 Frames

HV unit	Stainless Steel

5.3.5 Exhaust Motors

Fan characteristics:

Type	radial single inlet

Motor characteristics:

Type	External Rotor
Voltage	400V 3ph 50Hz
Inrush current	8.75 Amp
Insulation	Class F
Protection	IP 44
Thermal protection	Internal auto-reset thermostats.

6 Air Distribution

6.1 Fresh air

The fresh air inlet grills are located 2 side wall of the HV unit, which will allow the fresh air to penetrate directly into the HV unit .They are equipped with one electrical damper each one to ensure the different air flow configurations and the preheating times.

6.2 Return air damper.

The HV unit will include one electric return air damper located just behind the unit after the return air grill, and will be closed during summer time to ensure different fresh air flows according to EN 14750.

6.3 Return air

The HV units are installed above of the Tramway. The return air intake will be placed just below the unit taking the air directly from the platform or from other grills placed in other areas to be agreed with the Tramwaybuilder.

6.4 Supply air

The supply air is blown to tramway ducting through the supply opening placed in the bottom of the unit.

7 HV system working modes

7.1 Temperature regulation:

In regulation mode, the electronic control of the HV system will measure the ambient, supply and Tramway internal temperatures in order to decide over the corresponding functioning mode eg. ventilation or heating position and capacity to achieve the desired set-point temperature in the interior of the Tramway.

7.1.1 Heating mode:

The unit will works in heating mode when internal temperature was below set point. In this case the total fresh air will be 2000 m3/h to get a minimum renewal of internal air of 8m3/h per passenger per hour. This fresh air will be mixed with return air, heated and blown to the saloon.

7.1.2 Ventilation mode.

The unit will work in ventilation mode when internal temperature was equal or higher than set point one. In case of having a ambient temperature higher than 20ºC and a internal temperature higher than 24ºC the total fresh air flow will be increased to 7500 m3/h per unit to have a fresh air flow rate of 30 m3/h per passenger. In this case return air damper will be closed.

7.2 Degraded mode:

In case of electronic control failure one thermostat installed within the HV unit allows the unit to work in heating mode when internal temperature is below the set point of the thermostat. If the internal temperature is above the thermostat set point the unit will works in ventilation mode. The return air damper will be opened during this conditions.

8 Electronic control

8.1 Introduction

The control system has been designed as an integral part of the air conditioning system and is based on a microprocessor, which is the heart of the system.

The microprocessor provides control of all the normal functions i.e., heating and ventilation.

Thermostatic functions are controlled by the microprocessor in association with temperature sensors mounted in the return air, supply air stream and fresh air intake of the unit.

System monitoring and fault diagnosis is provided by the microprocessor to an RS 232 outlet that can be accessed with the aid of a laptop computer (PTU) and the appropriate software (provided by MERAK under separate order).

Controls are selected for operation from battery supply to ensure stable operation.

The HV microprocessor control is mounted inside an electrical rack inside the saloon.

8.2 Microprocessor Description

8.2.1 General

The microprocessor hardware can be divided into 4 operating blocks:

A *Microprocessor Block*

The microprocessor block consists of the Central Processor Unit CPU.

Microprocessor firmware is stored in a FLASH memory as this provides a very stable environment for the microprocessor and avoids any possibility of corruption by exterior noise.
Minor changes to the operating software are possible by use of the onboard FLASH-memory and can be made without change of firmware.

B *Communication Block*

The communication block comprises a RS232 interface that can be accessed with the aid of a laptop computer (PTU) and the appropriate software (provided by MERAK under separate order).

C *Input / Output Block*

The input / output block function is for communication with the exterior environment to drive outputs and to receive various inputs.
Inputs are both digital (from contacts, push buttons etc.) and analogue (from the temperature sensors, pressure transducers etc).

Outputs are digital to drive relays, lamps etc.

C *NOVRAM Data Storage Block*

The NOVRAM block is a combination of RAM and EEPROM. This block is used for storage of operating data and fault registration. The use of NOVRAM avoids the use of additional batteries and provides a convenient means of storing data.

8.2.2 Microprocessor Specification

Power Supply

Input Voltage	Battery
Voltage range	70% < Nominal value < 125%
Output voltage	5V, 11V, and 24V.
Maximum absorbed power	30 watts (digital inputs absorbed power not considered)
Input / Output isolation voltage	1500 V 1 minute
Over voltage Protection	IEC-571-1
Working temperature range	-30^{0}C to +70 ^{0}C

Digital Inputs

Maximum quantity	40 and 24 more if necessary (optional)
Digital level 1	70% < Nominal value < 125%
Digital level 0	0v (0 to 10V)
Input current	higher than 8 mA at nominal battery voltage

Digital Outputs

Maximum quantity	28 (voltage free relay contact) and 16 more if necessary (optional)
Maximum voltage	250 V AC - 5 Amp 100V DC – 0.5 Amp

Analog Inputs

Quantity	8+8 opto-coupled and 8 more if necessary (optional)
Voltage	0 - 5v DC with common reference.
Digital resolution	10 bit (1024).

Microprocessor

CPU	STR7
Manufacturer	ST Microelectronics
Clock frequency	16 MHz
CPU Internal RAM memory	64 KB
Firmware and software application	
FLASH internal memory of CPU:	256 KB
Data NOVRAM memory	128 KB
A/D Converter resolution	12 bits

Serial interfaces

RS485 exchange data link	2 ports for the TMS
RS232 Interface	1 port for the PTU

9 Power requirements

9.1 Normal heating mode.

Item	Per HV / Tramway		
	Battery		
	kW	kW	kVA
Fan motors (400 Vac, 50 Hz ·3ph)	0	3	4.3
Exhaust motors		2.5	3.2
Heaters (750 VDC)	0	60	60
Controls	0.2	-	-

9.2 Ventilation mode

Item	Per HV / Tramway		
	Battery		
	kW	kW	kVA
Fan motors (400 Vac, 50 Hz ·3ph)		3	4.3
Exhaust motors		2.5	3.2
Controls	0.2	-	-

10 Drawings

Item	Document Reference
Outline drawing of HV unit	L-0050302 rev.B

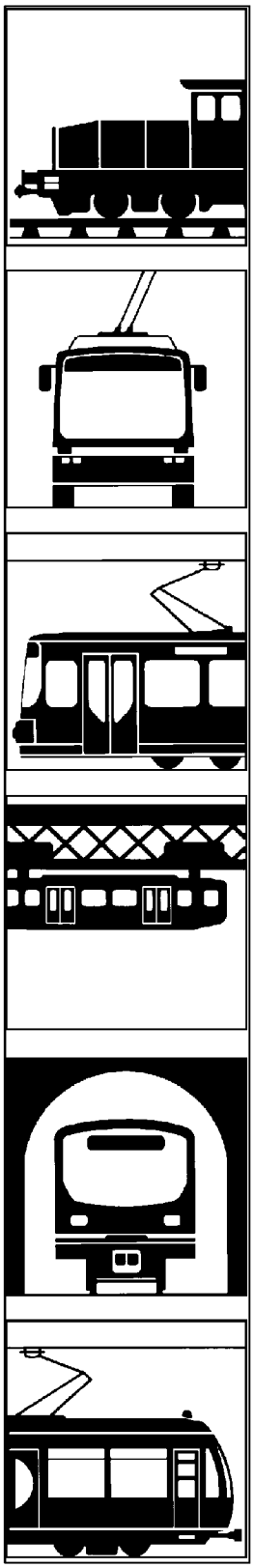

Technical Description

of the propulsion equipment

for

CAF – Edinburgh Tram Addendum 2

CAF - Edinburgh Tram

Contents

1 General ... 3

2 Layout of the equipment ... 4

3 Scope of supply ... 4

4 Propusion system ... 5

4.1 General description ... 5

4.1.1 Concept ... 5

4.1.2 Propulsion – Concept ... 7

4.1.3 Roof-container **- Concept** ... 7

4.1.4 Propulsion Inverter – Concept ... 8

4.1.5 Control - Concept ... 10

4.1.6 Pre-set value processing in the ASM ... 11

4.1.7 Nominal value processing in the USM ... 11

4.2 Function of the traction equipment ... 12

4.2.1 Driving ... 12

4.2.2 Braking ... 12

4.2.3 Overvoltage protection and fuses ... 13

4.2.4 System line filters ... 13

4.2.5 Braking resistors ... 13

4.3 Auxiliaries ... 14

4.4 Protective Equipment – HSCB ... 14

4.5 Traction motor ... 21

5 Brake equipment ... 24

6 Master-Controller with integrated Dead Man's switch ... 25

6.1 Start-up Lock and Operating Mode Selector ... 25

6.2 Dead Man's switch ... 26

7 Diagnostic system ... 26

7.1 Diagnostic aid ... 27

7.2 Display ... 27

7.3 Parameters ... 28

7.4 Data memory ... 29

7.5 Supplementary data ... 30

7.6 Trigger function ... 30

7.7 File management ... 31

8 Technical Documentation ... 31

9 Software ... 31

10 Spare Parts and Maintenance ... 31

11 Acceptance ... 31

12 EMC Concept ... 33

13 optional Equipment : Ultra- Caps for increased energy savings ... 33

13.1 Ultra Cap Modules ... 34

13.2 Step up inverter ... 35

13.3 Allocation on vehicle ... 35

14 Other Matters ... 37

15 Work on the project: ... 37

Abbreviations

DGG	Dachgerätegehäuse	roof container
DPU	Direktpulsumrichter	direct pulse inverter
USM	Umrichtersteuermodul	inverter control module
BNU	Bordnetzumrichter	static auxiliary converter
ASM	Antriebssteuermodul	traction control module
ZLG	Zentrales Leitgerät	train control unit
BSG	Bremssteuergerät	brake control unit
BSM	Bus Steuermodul	train control interface
HSCB	Schnellschalter	high-speed-circuit-breaker

1 GENERAL

This document is a functional description of Vossloh KIEPE's scope of delivery, i.e. the propulsion equipment consisting of master controller, high-speed-circuit-breaker, traction inverters, braking resistors and traction motors for the 100%-low-flow tram Edinburgh.

Figure 1: Tram Concept

Technical data Vehicle	
Max. Speed	70 km/h
Overhead line voltage (DIN EN 50163)	DC 750 V
Overhead line voltage, dynamic braking (adjustable)	DC 900 V
Length	40 m
Width	2.65 m
Height	3.385 m
Weight (AW0)	53,311 kg
Weight (AW 4)	81,591kg
Performance 0 -> 30 km/h	1.2m/s² up to AW4, instantaneous
Performance 0-> 70 km/h	0.8m/s² up to AW4, average
Service brake, electric-dynamic	1.2m/s²

2 LAYOUT OF THE EQUIPMENT

Each roof equipment container (DGG) houses two traction inverter. These containers are easily accessible and thus enable easy maintenance and repair work to be carried out simply and quickly.

The electronic equipment is specially designed for railway application. The E.S.R.A. (Electronic System for Railway Application) is proven technology. The experiences from previous projects (refer to reference list) have been used to develop an E.S.R.A. that particularly fits for railway service due to

- shock and vibration proven design
- high temperature range
- low weight
- high reliability
- low life cycle costs
- easy maintenance
- high diagnostic aid and fault analysis via standard PC
- 30 years service life

The E.S.R.A. is of shock and vibration proven design. In addition to that the roof containers are mounted with an elastic suspension (Megi Konus) in order to prevent against shock and vibration forces.

The equipment on the roof is housed in waterproof aluminium containers. All electric materials inside the car as well as in the containers are halogen-free and fire-retardant.

All parts of the Vossloh KIEPE equipment complies with the requirements given by the actual European standards and the state-of-the-art technology valid at the time of preparing this tender. Especially the equipment is designed to be resistant to fire in accordance with the relevant UK standard (BS6853, Cat. 2).

3 SCOPE OF SUPPLY

Components:

3 pcs	roof container DGG 25x, containing: 2 pc traction inverter DPU 1 pc line contactor 1 pc traction control module with a train control interface (RS485)
3 pcs	breaking resistor
12 pcs	traction motor (mechanically assembled to 6 pears, but electrically independent)
1 pc	high-speed-circuit-breaker
2 pcs	master controller

4 PROPUSION SYSTEM

4.1 General description

4.1.1 Concept

The traction equipment is based on a three-phase driving concept with asynchronous machines as the traction motors (M). Two independent traction inverters (DPU) will be installed in each of the three Vossloh KIEPE roof containers (DGG) supplied per vehicle. Each DGG includes a traction control module (ASM) which contacts the master controller (SGW).

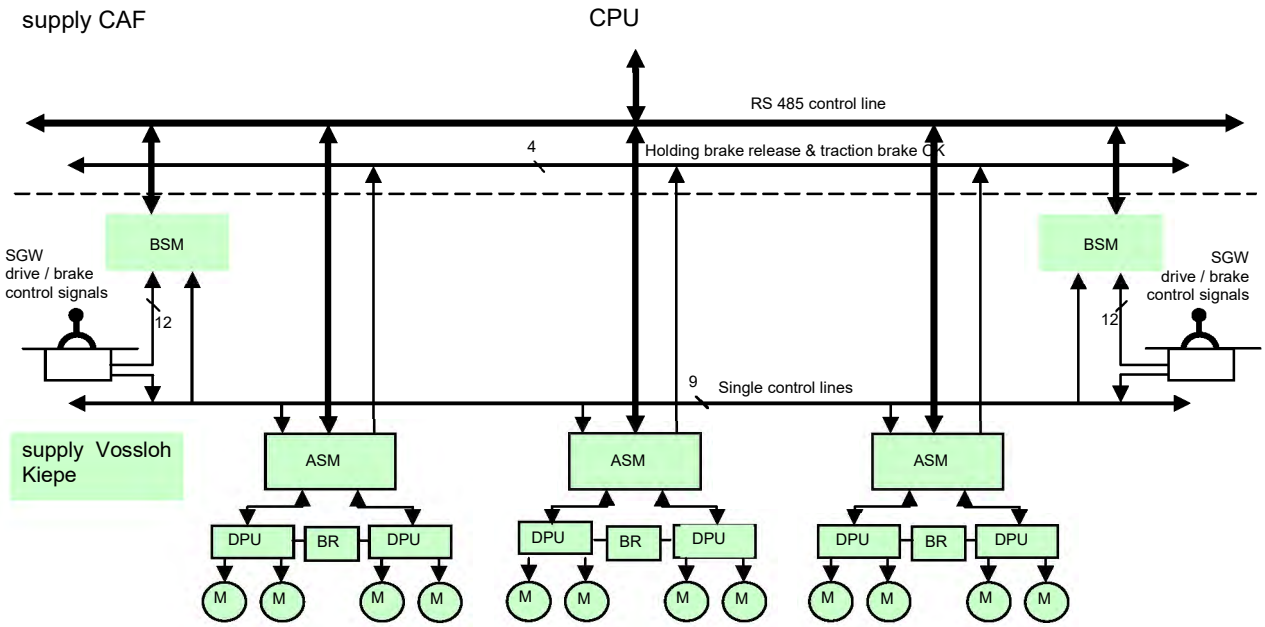

Figure 2: Control Concept

This design ensures easily accessible components, that are wired and completely tested in our factory. This gives following advantages:

- EMC
- low weight
- wiring in the vehicle reduced
- completely tested components to minimize time to put into service
- efficient cooling

Figure 3: Propulsion concept

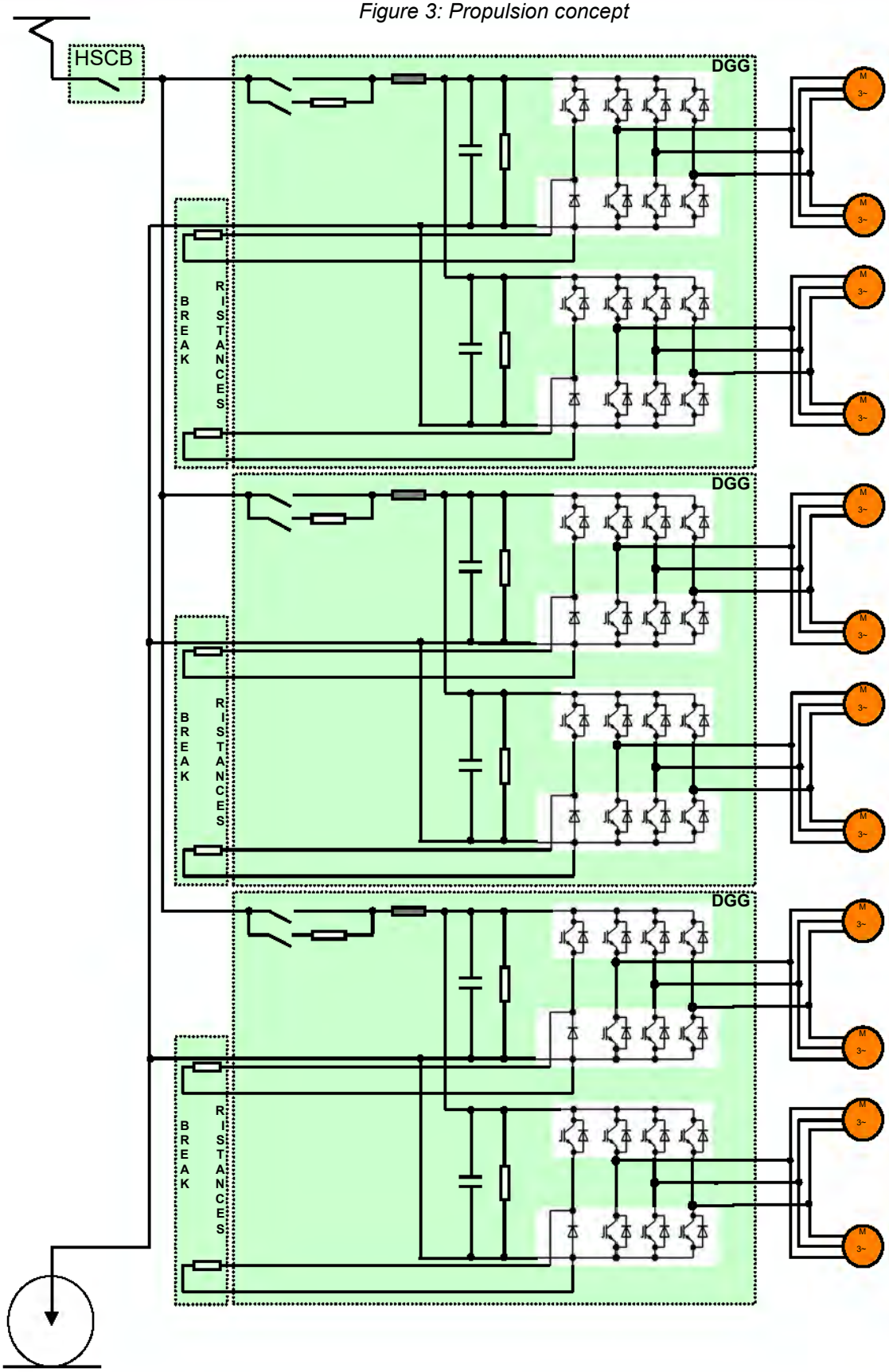

4.1.2 Propulsion – Concept

Each of the three propulsion packages are identical. Each package is made up of the following components:

- 1 Line contactor
- 1 Line filter
- 1 traction control interface (ASM).
- 2 Direct pulse inverter with integrated brake chopper (DPU) and inverter control module (USM)
- 2 Braking resistors
- 4 Three-phase asynchronous motors

4.1.3 Roof-container ***- Concept***

Each roof-container (DGG) comprises:

- two IGBT direct pulse inverter DPU
- Brake chopper
- Temperature and over-current supervision
- two inverter control modules USM
- switching devices, filters, blower, current and voltage measuring devices
- traction control and diagnosis interface module ASM

The DPU assembly features an effective forced air cooling system. The cooling fins are insulated from the semiconductors.

The power input of the DGG is connected directly to HSCB. According to our experience a line protection with melting fuses may be sufficient necessary to fulfil the safety requirements for the electronic power units. Thus a high speed circuit breaker is not stringently required!

The braking resistors are not part of the DGG. The three DGG are mounted on the roof, each for one motorised bogie, whereas each DPU in the DGG powers the 2 traction motors per side.

Technical data – DGG 25X - Roof container	
Dimensions (L x B x H)	1620 mm x 1160 mm x 453,5 mm
Weight	Appr. 425 kg
Cooling	Forced air cooled
Class of protection	IP 54 according to EN 60 529
Ambient temperature	-25°C until +45°C

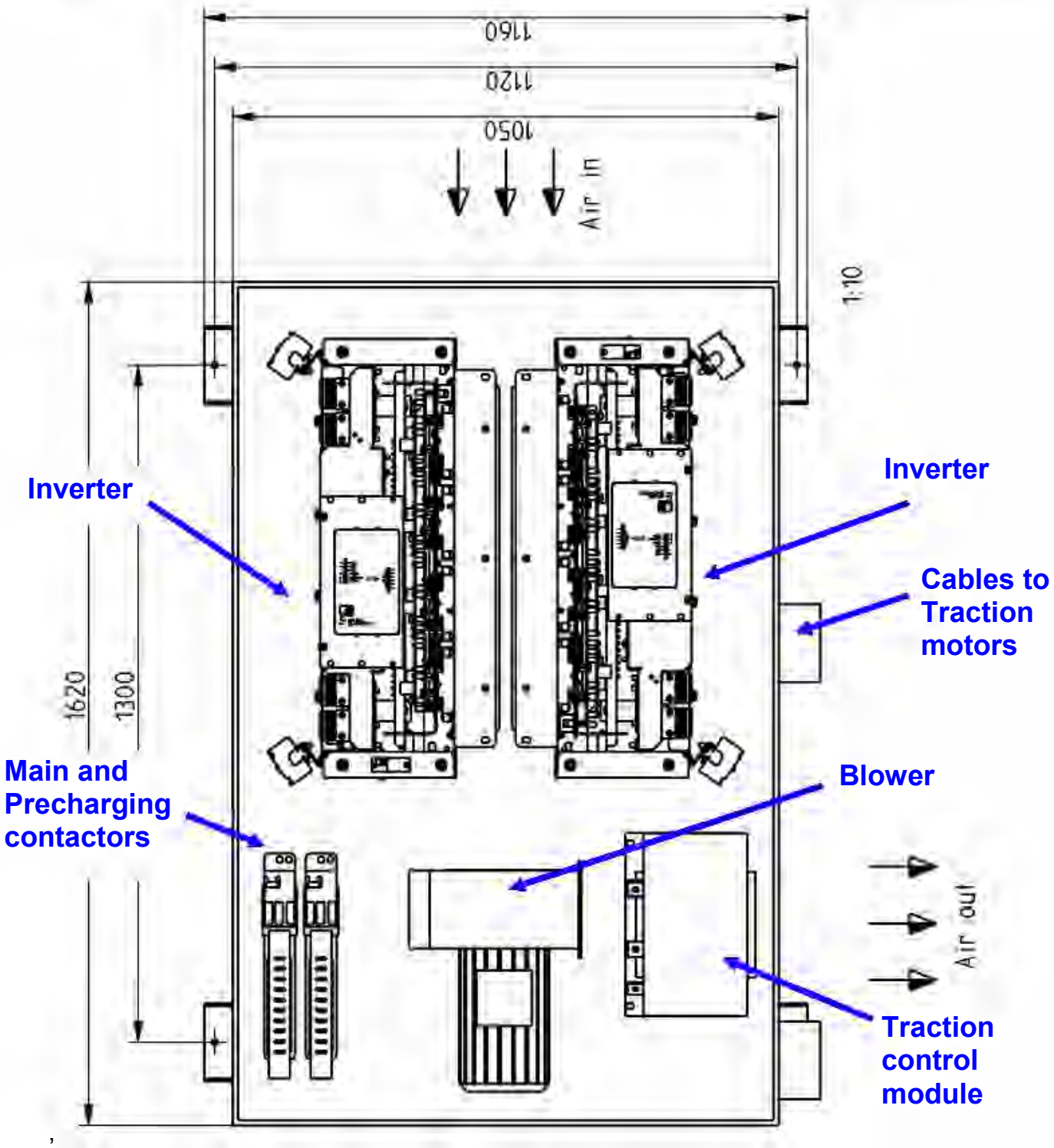

Figure 4: Roof container DGG 25x – Traction inverter

4.1.4 Propulsion Inverter – Concept

Each inverter-DPU consists of the following components:

- Line filter (line capacitor with charging and discharging device plus line inductor)
- IGBT direct pulse inverter

- Brake chopper
- Temperature and over-current supervision
- Power supply, diagnostic data, control modules for the fibre optics cables

Technical data – traction inverter	
Max. overvoltage	entsprechend VÖV 6.030.5 (together with a surge arrestor)
Rated output per inverter	160 kW
Max. output per inverter	400 kW für t < 60 s
Control voltage	DC 24 V +25 %, -30 %
Isolation voltages - first isolation (service isolation) - second isolation	 3,55 kV, f = 50 Hz, t = 1 min. 2,2 kV, f = 50 Hz, t = 1 min.
Dimensions (L x B x H)	App. 844 mm x 440 mm x 332 mm
Weight	App. 90 kg
Cooling	Forced air cooled
Class of protection	IP 00 nach EN 60 529
Ambient temperature	-25°C until +45°C

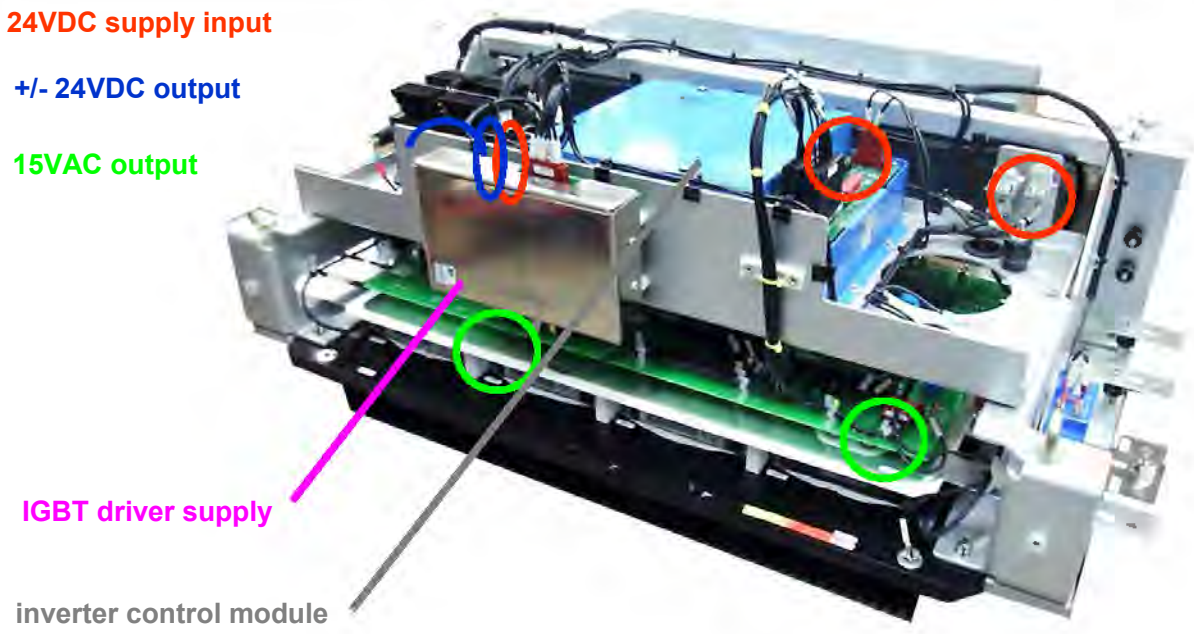

Figure 5 Direct pulse inverter – Traction inverter

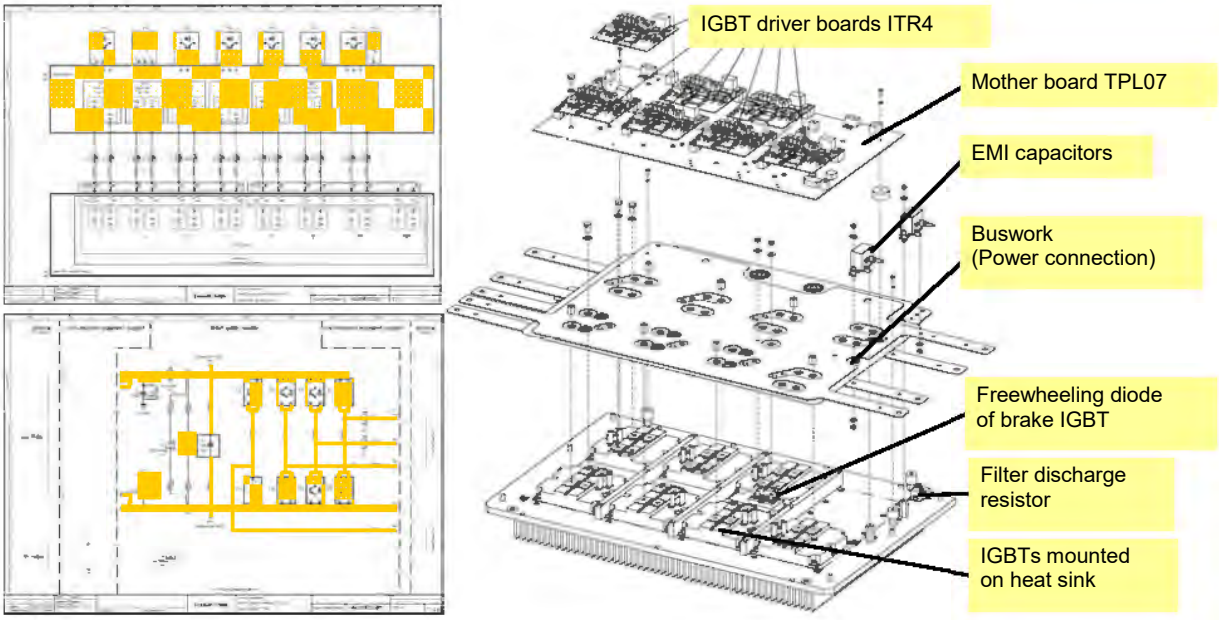

Figure 6: Direct pulse inverter – Traction inverter

4.1.5 Control - Concept

The control for driving and braking consists of devices carried out in microprocessor technique as follows:

- traction control module ASM with the functions
  - Wheel spin / slide protection device
  - Jerk limitation
  - Limitation of the maximum speed
  - Limitation of line current and voltage returns on braking
  - Weight computation
  - Wheel diameter consideration
  - Recording of diagnostic data (fault file and occurrence file)
  - Revolutions per minute (RPM) recording and evaluation
  - Interface to the RS 485 vehicle bus and to the assigned USM
  - RS232 interface for diagnosis
  - Control of different internal and auxiliary components.
- inverter control module USM with the functions
  - Control of the asynchronous motors with pulse-width modulation from the direct pulse inverter (DPU)
  - Computation of pulse pattern
  - Control of the brake chopper
  - Controlled charging and discharging of the line filter capacitor in the DPU
  - Monitoring of the overhead current

- CAN interface to the assigned ASM
- Control of different components such as:
  - Temperature of the traction motors, temperature, over-current and overload in the DPU, inverter power supply, current and voltage measuring devices

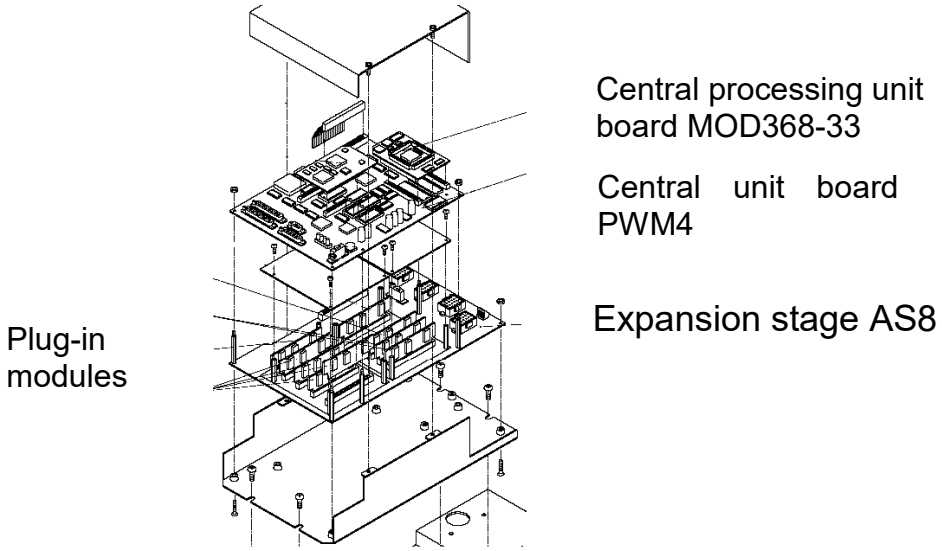

Figure 7: Control for Driving – Invertor control module USM

The electronic drive/brake control systems are supplied with information and commands by a train control unit (scope of CAF).

4.1.6 Pre-set value processing in the ASM

The pre-set value provided by the master controller is used to compute the torque nominal value in the ASM. The following parameters have an influence on the nominal torque value:

- Speed-/ torque characteristic
- Jerk limitation
- Passenger load
- Wheel diameter
- Wheel spin / slide protection

The passenger load of the vehicle and thus its weight is computed by the control units. Thus a mechanical weight measurement device is not required. Any load of up to 2/3 of the total load does not have in impact on acceleration and deceleration of the vehicle due to the load compensation characteristic of the drive control module (ASM). A load information will be supplied by CAF.

4.1.7 Nominal value processing in the USM

By the principle of field oriented vector control, the flux and the torque are controlled. The output of the field orientated vector control is transformed by a motion controller into an appropriate pulse pattern for the IGBTs.

4.2 Function of the traction equipment

Two asynchronous traction motors are powered by one traction inverter DPU directely fed by the DC line voltage. The inverter system converts the mains voltage U_N and current I_N into corresponding alternating quantities of variable frequency f_1 and an adjustable fundamental-wave amplitude U_1 for the traction motors. The inverter is of voltage-source type.

The torque of the asynchronous motor is controlled according to the principles of the field orientated control. All measurable physical variables such as currents, voltages, frequencies etc. are collected in each microprocessor controlled system. Further parameters such as torques, rotation speeds and temperatures can be calculated from the primary variables. This avoids the need for a large number of delicate sensors and measuring devices, further enhancing the dependability of KIEPE control systems. As a matter of fact, no additional sensors are required for diagnostic purposes. The amplitude and frequency of the voltage is adjusted by pulse width modulation (PWM).

The running direction is changed by altering the pulse sequence between the bridge arms of the inverter. As well, switching over from driving to braking is also performed only electronically, without any contactors.

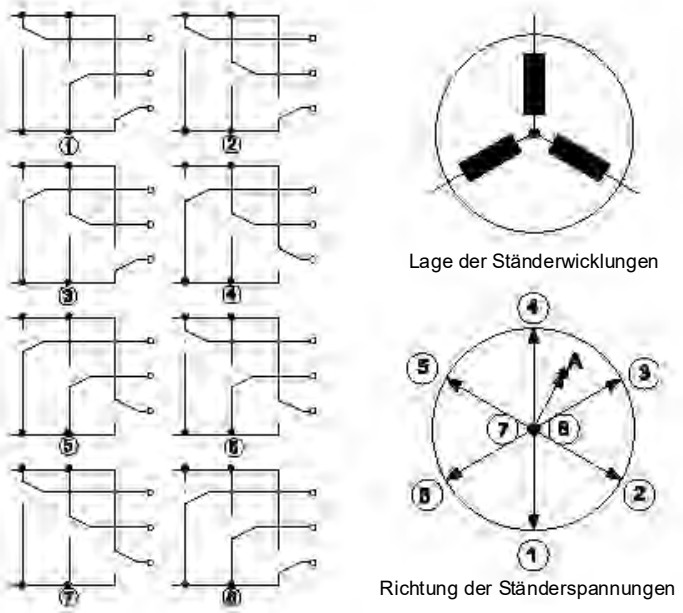

Figure 8: Running direction is changed by altering the pulse

4.2.1 Driving

In the driving mode, the energising direct voltage supplies the electric power which is converted in the pulse-controlled inverter and changed into mechanical power in the asynchronous machines.

The desired operating point, according to the operation, is adjusted by pulsing the alternating voltages in the three phases and the stator frequency. In the driving mode, the stator frequency f_1 is always greater than the mechanical rotational frequency f_n in order to operate the asynchronous machine as a motor.

4.2.2 Braking

The braking system comprises the generator brake, the electro-hydraulic spring-loaded brake and the magnetic track brake. The different brake systems (service, emergency, parking brake) are actuated by the control according to the commands of the driver or of the safety monitoring system.

In normal operation the service brake is generatoric; the friction brake is only used for stopping and securing the vehicle (speed lower than approx. 3 km/h).

In the braking mode, the asynchronous motors are used as generators. The converter adjusts the stator frequency f_1 so that it is lower than the mechanical rotational frequency f_n. The traction motor supplies the electromotive force to the converter, which works as a rectifier.

For electro-dynamic braking a combined regenerative and rheostatic brake is applied. If the overhead contact network can accept the regenerated power not completely, the braking energy is dissipated by resistors. The rheostatic braking is activated electronically using IGBT. This case is detected by monitoring the line capacitor voltage. If the voltage exceeds its maximum value of 900 V (according to the BOStrab reglementations), rheostatic braking is actuated automatically. During emergency braking the generator brake works only as a rheostatic brake for safety reasons. The limiting voltage is adjustable.

The braking controller thus can achieve any desired braking characteristic even with rheostatic braking. It is possible to use regeneration in braking down to standstill. The concept based on a generatoric brake performance of the propulsion equipment of 1.2m/s².

4.2.3 Overvoltage protection and fuses

Protection against line overvoltages has to be assured by a cathode fall arrestor that has to be delivered by CAF.

The power circuit of the propulsion inverters has a HSCB as protection.

4.2.4 System line filters

A separate input filter is assigned to each DGG unit. The input filter limits voltage and current harmonic distortions from the feeder network and those involved with the pulse control operation. It acts as a decoupling network.

The network filter consists of a line inductor and a network capacitor. The line inductor is of the air-core type and is sited in the cooling air duct. As the air-core inductor does not exhibit saturation phenomena, the resonance frequency and thus the filter property keeps fixed.

The network capacitor is designed as an electrolytic capacitor. Thus it combines the advantages of high-voltage and high-current capability and of high capacity at small volume. In order to avoid current overratings, the capacitor is charged and discharged via resistors.

4.2.5 Braking resistors

The braking resistor is used to absorb the re-energised electric power if the network is not capable of doing so. Low-inductance resistors are used and placed very close to the inverter. Every inverter is a resistor allocated.

The resistors are designed in accordance with IEC 77 and IEC 322 and allow braking by employing exclusively the brake resistors. They are constructed for self-cooling and mounted on the roof. Two brake resistors are in one housing.

Each resistor consists of resistor coils. On their bottom they are isolated by a steel plate to prevent overheating of the vehicle roof.

The resistor coils are made from high quality, particularly non-corrosive steel. All the electric connections are designed as welded or hard soldered connections inside the package.

Since the resistors have a double layer of insulation, they can be mounted directly onto the roof.

Figure 9: braking resistor

For Dimensions please find attached the dimension drawing “Braking Resistor.pdf”.

Techical data – brake resistor:

Resistor value	2 x 2.1 ohms
Tolerance	-+3%
Thermal current	121 A (per resistor)
Material	NiCr 3020
Class of protection	IP 00
Nominal voltage	DC 750 V
Dimensions	1610x800x430mm (LxBxH)
Weight	appr. 130 kg
Ambient temperature	-25°C - +45°C

4.3 Auxiliaries

The power supply for the control electronics of the DPU has several separate, insulated outputs and will be fed by the DC 24 V onboard power supply (CAF). If a disturbance in the power supply appears, then the cause can be determined by an error code that can be displayed using the diagnostic software tool.

The control signals for the power semiconductors are insulated using fibre optic cables. The control of the driver steps and the pulse pattern computation are carried out by the inverter control module (USM), one is assigned to each DPU.

The fan of the DGG will be fed by the AC 400 V 50 Hz onboard power supply (CAF).

4.4 Protective Equipment – HSCB

Characteristics

Basically the Vossloh Kiepe GmbH (VKD) electronic control system is designed in such way that a separate High Speed Circuit Breaker (HSCB) is not stringently necessary. The line protection and the cases of short circuit may be served by a fuse installed close to

pantograph. All other failures of the traction equipment, such as over voltage, overload and internal equipment faults are safely controlled via fuses in the VKD control units and the main contactor. The protection against line over voltage will be also assured by the cathode fall arrestor.

Description

Figure 10 : HSCB

The UR6-31 is a trip-free DC high-speed current limiting air cooled circuit-breaker, single pole unit, bi-directional, with electromagnetic blowout, direct instantaneous over-current release, natural air-cooling and electrical operating system. It has been designed to ensure a rapid opening of its main contact, on detection of a short circuit, and to quickly extinguish the arc by generating a constant over-voltage during the whole interruption process. The UR6-31 is mainly used to protect propulsion and auxiliary equipments mounted on rolling stock and can also be delivered enclosed in a special protective box for vehicle roof or underframe mounting. The circuit-breaker is made of independent mounted sub-assemblies, corresponding to the different functions.

Characteristics

- Two hard silver contact lugs
- Breaking capacity at 110 VDC: 1 A (ohmic)
- Minimum let-through current: 10 mA for 24 V (for clean and dry environment)
- Possible connections: screws M3.

Auxiliary contacts

Six double-contacts switches of the type S 826 are mounted in the auxiliary housing and are wired as ab (NONC) contacts.

Breaking current parameters

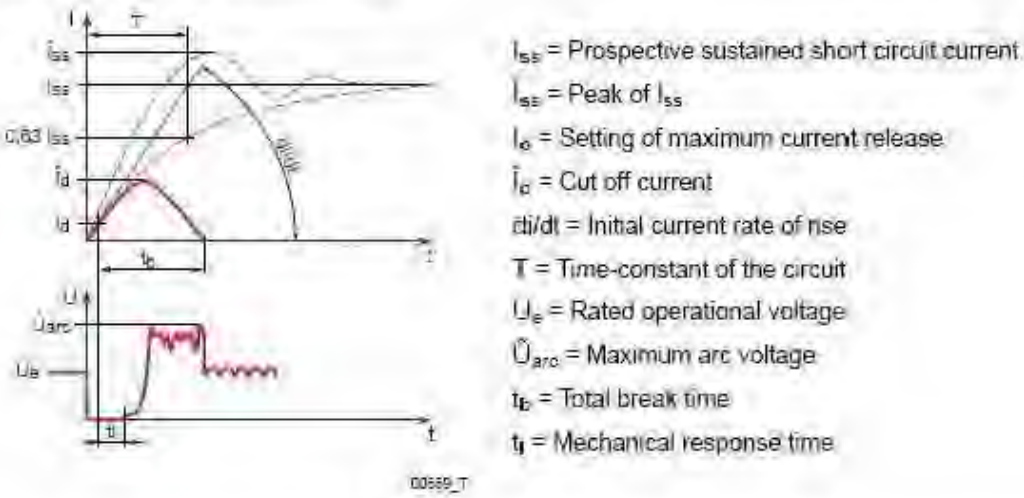

Opening time

Relationship between opening time t_m and the initial rate of rise of current di/dt for direct over-current instantaneous release.

Example for an initial rate of rise of current of $2 \cdot 10^6$ A/s: the opening time is about 2.8 ms.

Remark: for a shorter opening time the option "indirect release" can be used (refer to "option" paragraph).

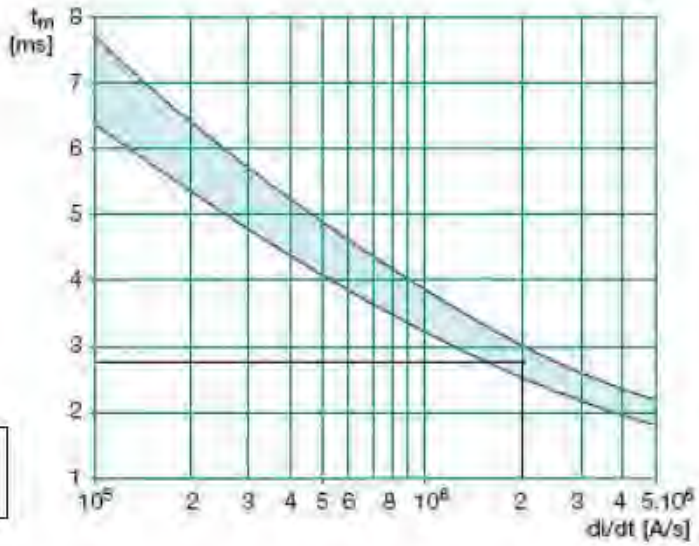

Figure 11 : Timing Diagram

Figure 12: Weight and dimensions

Protective enclosures

The TDP/TDS enclosures for UR6-31 or UR6-32 can be directly mounted on the vehicle's roof or under the vehicle's frame

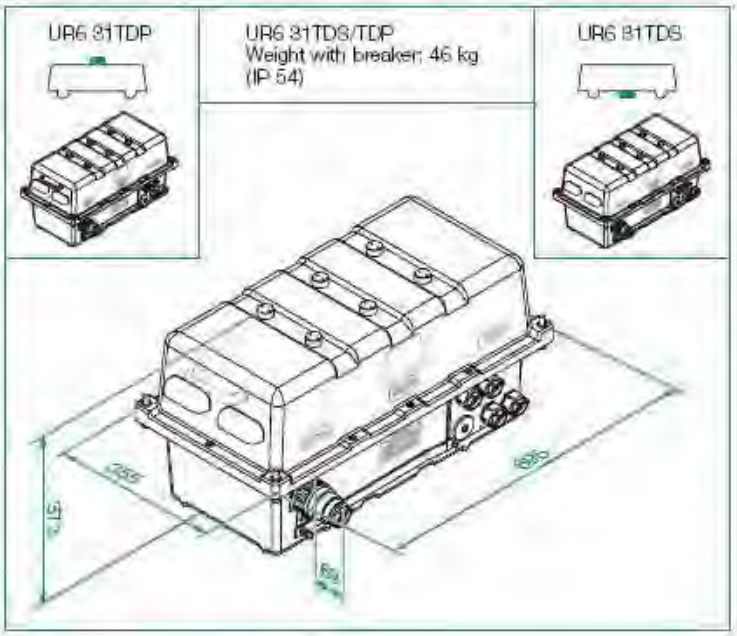

Example of TDP box's fixation on the vehicle's roof

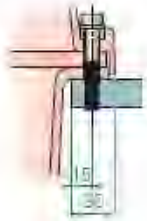

CAF - Edinburgh Tram

Weight	UR 6-31	UR 6-32
Circuit-breaker (standard, without options):	27 kg	37 kg

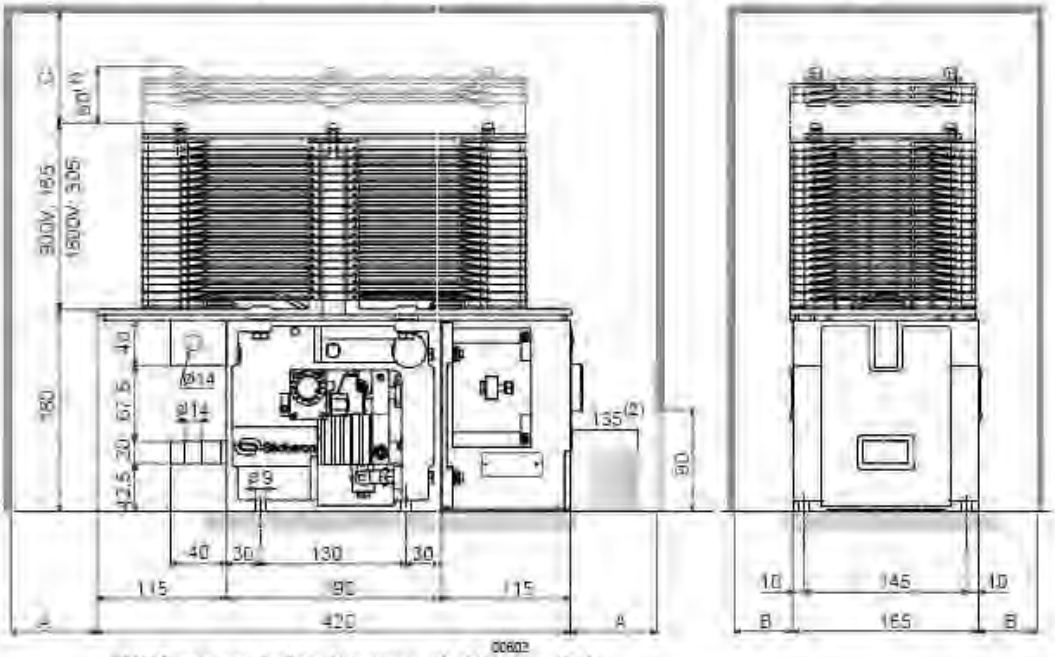

(1): Space needed for the removal of the arc chute.

(2): Space needed for the removal of the auxiliary box.

Clearances to be observed in operating position

Minimum distances to:	A	B	C
Insulating wall	90	55	0
Earth (metal wall)	350	200	150

Main circuit

	Unit	UR 6-31	UR 6-32
Rated operational voltage	U_e	900 V	1800 V
Rated insulation voltage	U_i	2000 V	
Rated operational current	I_e	1000 A	
Conventional free air thermal current (at T_{amb} = 40°C)	I_{th}	1000 A	
Rated short-circuit breaking and making capacity Rated time constant T1 Rated time constant T2 Rated time constant T3 Rated time constant T4	I_{ss}/T	NA 30 kA/15 ms 30 kA/50 ms 30 kA/150 ms	NA 30 kA/15 ms 30 kA/40 ms 30 kA/100 ms
Direct over-current release	Id	0.45 - 0.9 kA 0.6 - 1.2 kA 0.9 - 1.8 kA 1.2 - 2.4 kA 1.5 - 3.2 kA	
Maximum arc voltage	$\hat{U}_{arc}$	1.5 - 2.1 U_e	

Refer to the corresponding data sheet for complementary information.

CAF - Edinburgh Tram

Control circuit

Nominal voltage	U_n	24, 36, 48, 72, 87, 96, 110, 220 VDC
Supply voltage limits (-25°C < T_{amb} < +40°C)		$0.7U_n$ to $1.25U_n$

Operating conditions

Ambient outdoors temperature	T_{amb}	-25 °C to +70 °C
Humidity:		Class 5K2
Altitude	h	≤ 1400 m
Flammability: according to standards:		NF F 16-101 - NF F 16-102 – NF ISO 1928 / DIN 5510 / BS 6853 - BS 476 / ASTM E 162 – ASTM E 662 – BSS 7239 - SMP800-C

UR 6-31 breaking diagrams

U_d = 1000 V, I_d = 2000 A

I_{ss}: prospective current

Cut off current

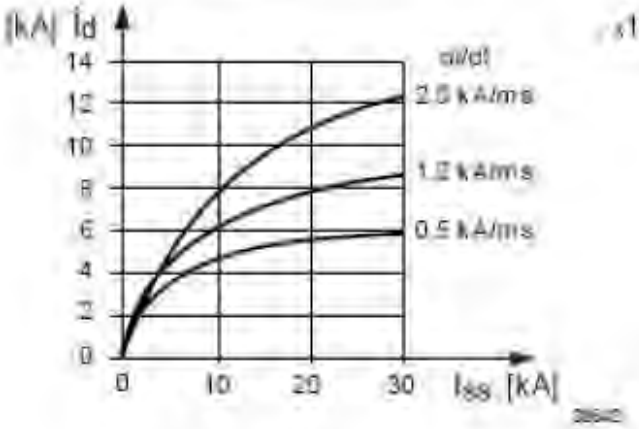

Integral I^2dt

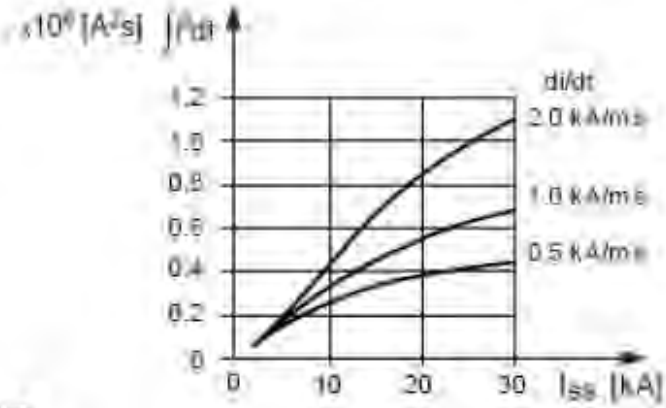

Total break time

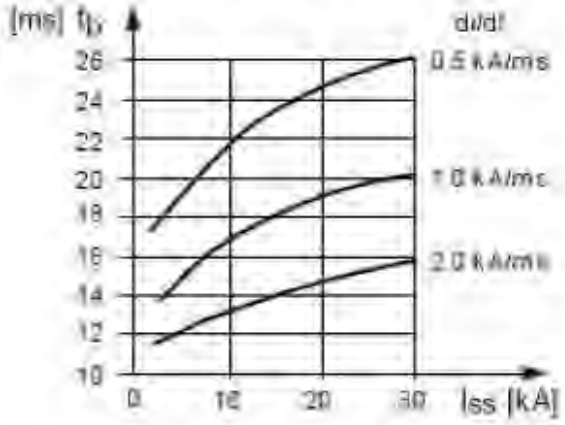

For other applications, please contact Sécheron.

Figure 13: HSCB Overview

1. Fixed insulating frame made of glass-fibre reinforced insulating material.
2. Main circuit, consisting of a lower connection terminal (21), a moving contact (22), an upper connection terminal (23), a fixed contact with horn (24) and another horn (25).
3. Over-current release.
4. Arc chute.
5. Closing device and fork.
6. Auxiliary contacts assembly.

Functions

Figure 14: HSCB Details

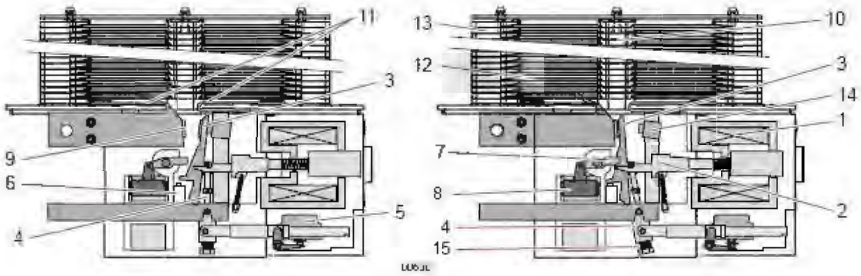

Closing

When a closing pulse is received, the closing device (1) moves the fork (2), which closes the ,moving contact (3) and applies the contact pressure to the main contacts (3 & 9). The guide (4), linked to the moving contact (3), actuates the auxiliary contacts (5). The closing shock is damped by the shock absorbers (6).

Holding

Once the main contact is closed, the contact pressure is maintained by the closing device (1), either with a reduced holding current (E type) or without current (M type).

Opening

The circuit-breaker opens either through an over-current tripping or through an appropriate opening order:

• An over-current, that exceeds the maximum current setting value, lifts the core (8) and causes the lever (7) to push the fork (2) downward, thus releasing the moving contact (3). See "Operation" for details.

• An opening remote order given to the circuit-breaker cuts off the holding current (E type) or applies a reverse pulse (M type), which moves the fork (2) toward the closing device (1). The spring (15) then opens the moving contact (3) and the guide (4) actuates the auxiliary contacts (5). The opening shock is damped by the shock absorber (14). The arc that is generated between the main contacts (3 & 9) moves upwards between the horns (11) into the arc chute (10) and is split by the baffles (12). The ionized gases are mostly neutralised by the de-ionizing plates (13).

Breaker control

The circuit-breaker can be maintained in the closed position using either a reduced holding current (E type) or without current (M type).

Note! Sécheron recommends the protection of the closing device coil using an automatic circuit breaker with thermic protection, which have the following characteristics: a closing pulse duration of 0.5-1 sec, the ability to trigger the circuit-breaker several times consecutively and a holding current that is limited to 5% of the closing current.

Over-current release operation

When excess current flows through the main circuit, it creates a magnetic field in the tripping device (11), inducing (12) an upwards movement of its moving magnet (13). This movement trigger the lever (14) and presses the fork (15) downwards (16), releasing (10) the moving contact (17).

Important!
When the circuit-breaker trips following an over-current, the fork (15) remains in closed position and need to be reset (18) to its open position by giving an "OFF" order to the closing coil.

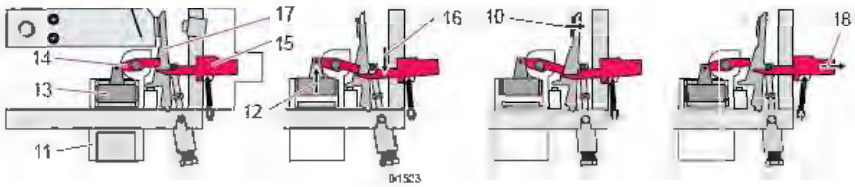

Technical data – HSCB:

Type	UR 6-31 TDS
Rated thermal current	1000 A
Rated voltage Housing	DC 900V Yes
Control voltage	DC 24 V
Control contacts	2 NO + 2 NC
Dimensions	695x360x380mm (LxBxH)
Weight	Appr. 46 kg
Ambient temperature	-25°C - +45°C

4.5 Traction motor

Four air-cooled three-phase asynchronous motors are provided for one motor bogie of the vehicle, by three motor bogies per vehicle. The four traction motors are fitted longitudinally to the direction of traffic on one motor bogie and fed by two inverter. The torque of the motor is transferred to the wheel via a gear box. The gear box and motor fastening is scope of supply of CAF.

1 Technical data *Traction motor*	**Asynchronous motor**
Weight (double motor)	m = 720 kg
Rated power	P_N = 2 x 70 kW
Rated speed	n_N = 1627 min-1
Rated voltage	U_N = 485 V
Rated current	I_N = 2 x 112 A
Rated frequency	f_N = 55 Hz
Power factor	0,81
Cooling system	IC411, Air flow (self ventilated)
Protection (motor / terminal box)	IP55 / IP65
Insulation class	200
Insulation system	VPI
Execution / mounting	special design

Code designations / abbreviations

DACS	Double Air Cooled System
NS / NDE	Nicht-Antriebsseite / non drive end
AS / DE	Antriebsseite / drive end
QTY	Unit of quantity

Traction motor construction

Three-phase cage induction motor

The traction motor (double motor) consists of two identical individual motors. In the following, this document describes the motor principle, the relevant motor sub-assemblies and related topics in detail.

Design principles:

Please find attached the dimension drawing “Double Motor.pdf” of the “Traction motor in double mechanically set for the project Edinburgh”.

In the completely enclosed machine there is in – opposite direction to the external air circuit – an inner air circuit arranged. A special fan, which is mounted on the rotor guarantees a continuous air circulation at all speed ranges inside the machine. In the stator as well as in the rotor there are axial holes for the inner air ventilation located.

For the two motors are screwed together and mounted as a double motor in one bogie. The shafts of the two motors are not connected together. The traction motor is especially reliable and sturdy. By walling off the aggressive environmental impacts, the reliability of the voltage tensioned parts of the machine can be guaranteed.

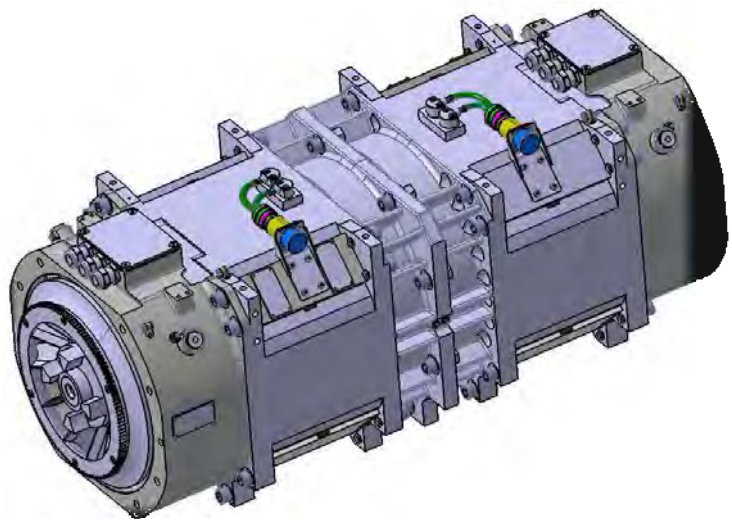

General:

In the stator built-in temperature sensors are arranged redundantly. These are connected to a separate terminal board. For safety protection a perforated sheet metal is mounted on the air suck side. To get rid of the condensation water a special system is included. The lifting threads are provided with thread protection.

Figure 15 Traction motor in double mechanically set for the project Edinburgh

Please find attached the dimension drawing “Double Motor.pdf”.

Stator

The stator is made of laminated dynamo sheet metal and forms, together with the two press plates, and the rails in between, the basic mechanical structure of the motor (“frameless“ type of construction).

Stamped stator steel sheets are welded together with press plates. This steel corset gives even without a stator housing the construction its stability.

The stator winding is carried out as profiled wire copper. It is connected with switching rings into a terminal box.

The stator winding consists of coils made of profiled, insulated copper wire, which are banded with additional coil insulation and inserted in the lined slot. The stator coils are connected (wired up) at the drive end (DE).

The stator winding is insulated according to VDI silicone insulation and complies with insulation class 200.

The temperature permissible stress of the winding corresponds to class 200.

The end shields on both ends are casted.

Rotor

The rotor sheet-metal package consists also of laminated dynamo sheet metal. The complete sheet-metal package is put on the shaft and held under pressure by two rotor press rings.

The rotor sheets are shrinked on the shaft. Press plates on both sides yield a permanent-press basic framework for the copper short-circuit cage. These stick ring combination is solded.

The fine balancing necessary for quiet running is carried out on the two fans of the rotor.

Motor connections

The motor is electrically connected by means of the terminal box arranged on top of the end shield. In order to lead in the connecting cable, each individual motor is provided with 3 bore holes with EMC screwed cable glands.

The electrical connection must be made according to the enclosed schematic diagram in the terminal box. The protective earth conductor must be connected to the frame. The terminal box cover is earthed with the stator frame by means of fastening screws.

PT100 temperature sensor

For monitoring the stator temperature, 2 pieces of PT100 temperature sensors are positioned in the iron package for each individual motor. The connecting lines are guided to a circular connector, which is mounted to the stator.

Speed sensor

An inductive speed sensor is used to determine the speed of the motor shaft. The tooth wheels are installed on each drive end. The speed sensors are mounted to the gearbox.

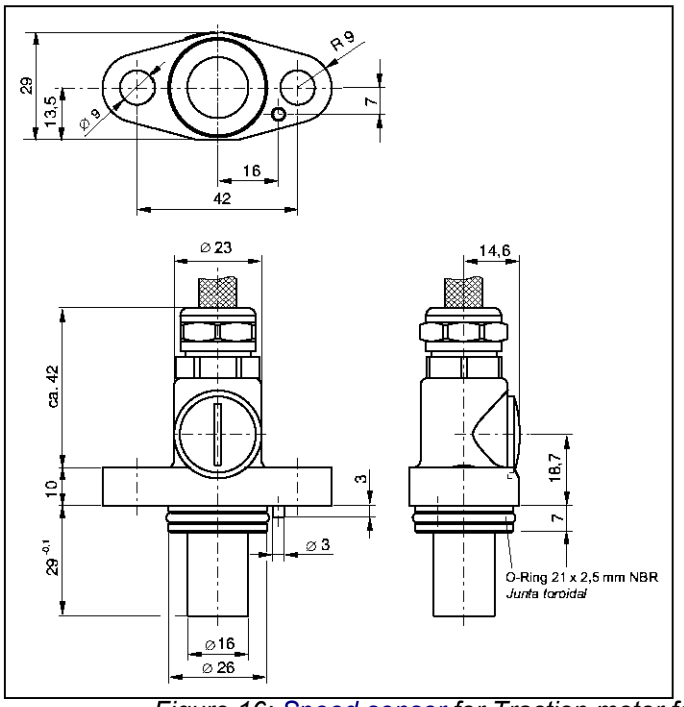

Figure 16: Speed sensor for Traction motor for the project Edinburgh

Motor bearing

The machine is designed with two isolated bearings with a regreasing device each.

The double motor consists of 2 motor units and has a total of 4 bearings. The motor shaft of one motor unit is mounted according to the fixed/movable bearing concept.

On the drive end a ball bearing and on the non drive end a cylindrical roller bearing is used.

The bearings have to be lubricated approximately every two years.

Cooling system

The cooling is designed according to the DACS principles (Double Air Cooled System).

The DACS principle cools the motor with two cooling circuits, which are connected in the stator via a heat exchanger according to the counter-flow principle. The first, inner cooling circuit circulates through the inner fan, passes the winding overhang, stator boring, winding overhang and rotor boring. This ventilation circuit is insulated towards the outside of the motor to prevent any dirtying of the motor inside. The second, external cooling circuit goes from the ambient air through the outer fan to the stator boring and then back into the ambient air again.

5 BRAKE EQUIPMENT

The vehicle is equipped with three different brake systems:

- dynamic brake
- spring loaded brake, operated electrohydraulically (not included in this proposal)
- electromagnetic rail brake (not included in this proposal)

The dynamic brake works together with the electrohydraulic brake system depending on the load and is controlled using a state-of-the-art wheel slip/slide protection.

Dynamic brake

During braking the asynchronous motors are used as generators. The stator frequency is set at a lower value by the inverter as the mechanical rotational frequency. The traction motor delivers the voltage to the inverter and it works as a rectifier. In case of service braking the energy is regenerated and fed back to the overhead line (network). If the overhead line can not take up the energy, e.g. if the line filter capacitor voltage has reached its maximum operational value the energy is automatically converted into heat in the braking resistors via the brake chopper.

In case of emergency braking the line contactor is opened for safety reasons.

Convection-cooled braking resistors are mounted on the roof of the vehicle. The braking resistors are appropriately dimensioned thus it is not required to monitor the temperature of the braking resistors.

Service Braking

In general, service braking is performed by the dynamic brake using the traction motors. Because of the decreasing brake effect of the dynamic brake at low speeds a jerk free blending to the mechanical brake is performed shortly before the vehicle comes to a standstill. A dynamic brake down to standstill can be supplied as an option.

In case of a partial failure of the dynamic brake the disc brake is used as the second service brake. If the dynamic brake of one bogie or a mechanical brake unit fails, the maximum speed of the vehicle is electronically limited to 30 km/h.

A powerful wheel slip/slide protection for optimal utilisation of the existing adhesion coefficients is integrated into the traction system. Mechanical load sensors are not required as the acceleration and deceleration is controlled. The innovative control includes a load compensation that also compensates the effects of the track gradient. Automatic load compensation is featured for loads up to 2/3 load (i.e. normal load).

6 MASTER-CONTROLLER WITH INTEGRATED DEAD MAN'S SWITCH

The pre-set value for the drive and brake functions are specified by the driver within a range of 0% to 100% by a hand-operated master-controller. The master-controller has lockable positions "0" and "emergency" brake settings. In addition the master-controller is equipped with a 'cruise control' setting, which allows the vehicle to maintain a constant speed (breaks are not automatically applied in this mode).

A dead man's switch is integrated into the master controller. It is operated in accordance with the requirements of BOStrab (the German Federal Regulations on the Construction and Operation of Light Rail Transit Systems) and DIN 5566 T3.

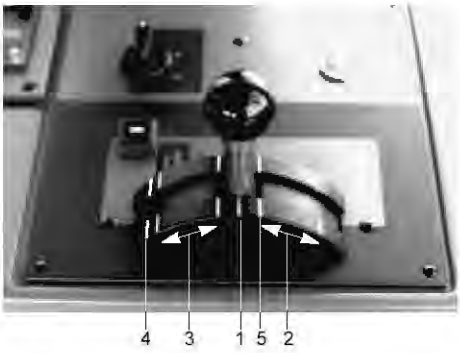

1: Neutral position
2: Driving
3: Braking
4: Emergency brake
5: Cruise control

Figure17: KIEPE Master-controller SGW 211

6.1 Start-up Lock and Operating Mode Selector

Protection against unauthorised use is provided by a key-operated activation lock. The mode selector has the following positions:

0: Vehicle switched off, master-controller mechanically blocked, preheating operation of the air cooling (option) and heating unit for the passenger compartment is possible,

* : All functions possible except driving,

V: Driving possible in the forward direction,

R: Driving possible in the reverse direction (max. 5 km/h).

The operating mode selector can only be set into the position 'R' if the button 'R' is pressed simultaneously. While reversing the speed is automatically limited to 5 km/h by reducing the thrust (brakes are not applied automatically).

Only the driver's cab can be started up by means of electronic interlocking mechanisms. In case of an attempt to start up a second driver's cab, an automatic train stop is activated.

Please find attached the dimension drawing SGW_1SK11578-12.tif and the detailed description of the mastercontroller series SGW 2XX GW_200_GB_DINA5_060322.pdf.

6.2 Dead Man's switch

The dead man's switch is actuated by pressing down the master-controller (*). If it is not actuated, e.g. if the driver feels unwell, an automatic train stop is actuated after an acoustical warning signal and a delay of 4 s.

(*) Alternative Methods may be optionally discussed.

7 DIAGNOSTIC SYSTEM

The KIEPE DIAGNOSTIC AID provides the transit authority operating the LRVs with a comprehensive management system for the electrical systems and electronic controls installed in the vehicles.

The DIAGNOSTIC AID consists of two complex functional units. The first block comprises recording of service data of the individual units which is integrated in these devices, for example in the KIEPE traction converter or in any KIEPE control unit. The second block consists of evaluation software which can be run on any Windows personal computer.

All measurable physical variables such as currents, voltages, frequencies etc. are collected in each micro-processor controlled system of KIEPE. Further parameters such as torques, rotation speeds and temperatures can be calculated from the primary variables. This avoids the need for a large number of delicate sensors and measuring devices, further enhancing the dependability of KIEPE control systems. As a matter of fact, no additional sensors are required for diagnostic purposes. Additional data is available from subsystems such as air conditioning units (HVAC), auxiliary power supply. The diversity of data which can be collected from the entire system is virtually unlimited and individually configurable.

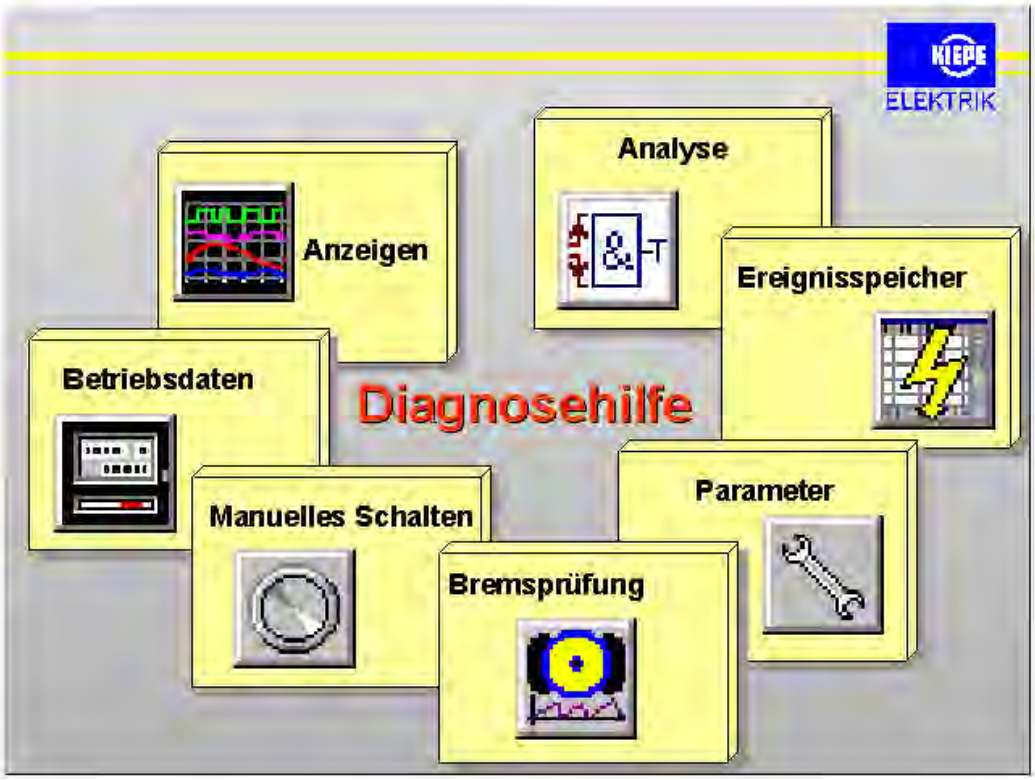

Figure 18: Main functions of the diagnostic system

The data collected and stored in the intermediate memory on board the vehicle can be transferred to a personal computer for evaluation. This can be carried out via a serial data interface cable connecting the equipment control units in the vehicle to a portable commercial Windows computer. Data transmission by data radio LAN is possible as an option. Assistance can be obtained via the public telephone network using a modem to contact the KIEPE service organization.

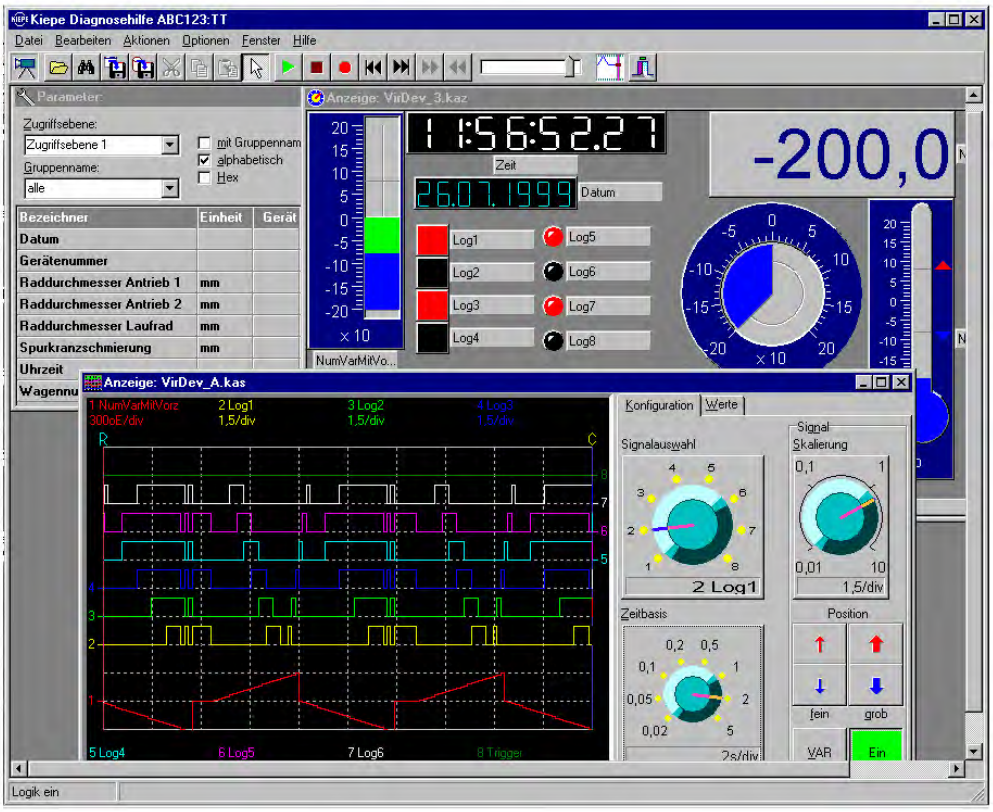

Figure 19: KIEPE diagnostic software

7.1 Diagnostic aid

The KIEPE diagnostic aid program presents itself to the operator with a user interface which is easy to operate. Functions are selected from menus with cursor movements or using a mouse. Detailed on-screen help texts for these functions can be called at any time.

7.2 Display

Status variables from the connected control unit can be displayed on the screen of a computer via its serial data interface without any need for setting up measuring equipment. The information can be displayed graphically (e.g. analog bar chart) or in the form of numerical values in a detailed table. A freely configurable combination of both display forms is possible too. The measurement sequences can be stored and displayed on the computer screen at a later time outside the vehicle. The status variables can be selected from a predefined table.

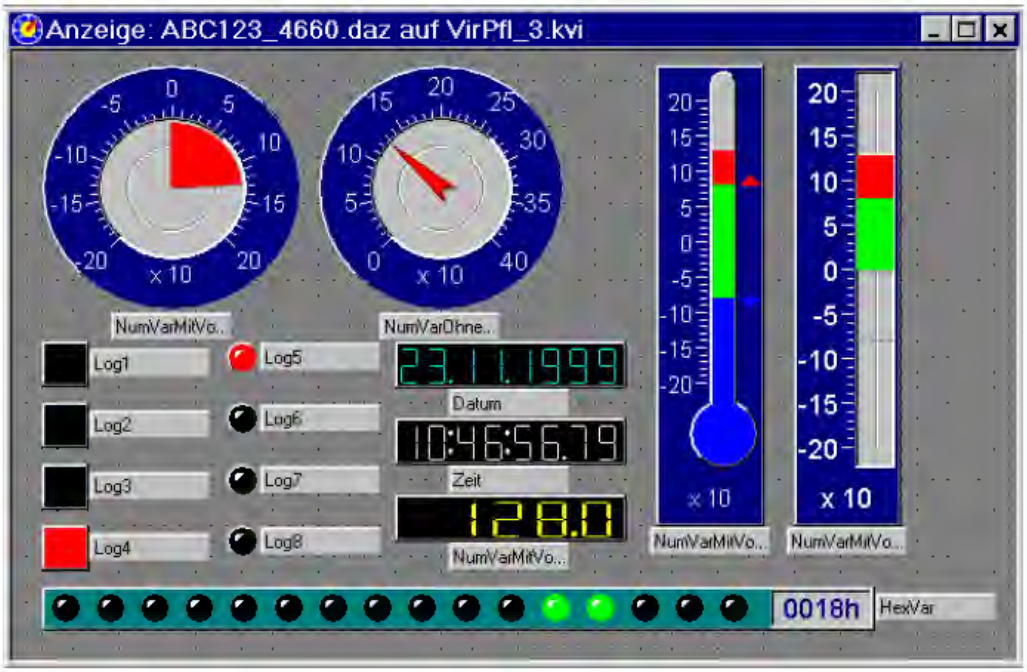

Figure20: measurement sequences

7.3 Parameters

All parameters required for the control unit can be displayed synoptically in a table or printed. These values are always shown together with their correct physical units. With the aid of this table, parameters such as the limit values for speeds, currents and voltages or torques can be changed and transferred back into the electronic memory of the control equipment. Certain parameters are protected against unauthorized alteration by passwords (PIN-code).

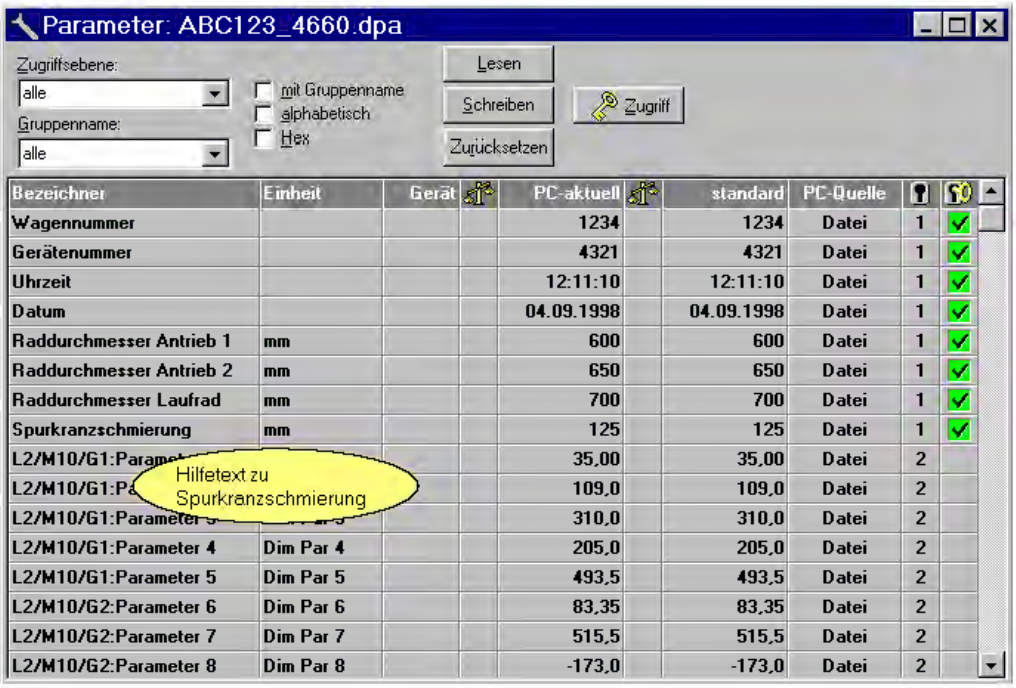

Bezeichner	Einheit	Gerät	PC-aktuell	standard	PC-Quelle		
Wagennummer			1234	1234	Datei	1	✓
Gerätenummer			4321	4321	Datei	1	✓
Uhrzeit			12:11:10	12:11:10	Datei	1	✓
Datum			04.09.1998	04.09.1998	Datei	1	✓
Raddurchmesser Antrieb 1	mm		600	600	Datei	1	✓
Raddurchmesser Antrieb 2	mm		650	650	Datei	1	✓
Raddurchmesser Laufrad	mm		700	700	Datei	1	✓
Spurkranzschmierung	mm		125	125	Datei	1	✓
L2/M10/G1:Parame			35,00	35,00	Datei	2	
L2/M10/G1:Pa			109,0	109,0	Datei	2	
L2/M10/G1:Parameter			310,0	310,0	Datei	2	
L2/M10/G1:Parameter 4	Dim Par 4		205,0	205,0	Datei	2	
L2/M10/G1:Parameter 5	Dim Par 5		493,5	493,5	Datei	2	
L2/M10/G2:Parameter 6	Dim Par 6		83,35	83,35	Datei	2	
L2/M10/G2:Parameter 7	Dim Par 7		515,5	515,5	Datei	2	
L2/M10/G2:Parameter 8	Dim Par 8		-173,0	-173,0	Datei	2	

Figure21: parameters

7.4 Data memory

Readout of the data memory is a useful instrument for maintenance of the total system. Events are counted, supplemented with date and time as well as other auxiliary data and then stored. Certain operating states can be reconstructed with the aid of these recordings for assessing the behavior of the control equipment.

Measured data can be displayed on the screen of a Windows computer online during operation in the field. Extensive measuring apparatus is no longer required because the measured data can be displayed simultaneously. The Windows computer can also be used to change parameter settings of the control units such as current limits, speed settings, acceleration limits and other parameters.

The diagnostic aid program incorporates a comfortable user interface and can be controlled with menus which appear on the screen when selected with the cursor or mouse.

Context-related help information is always available on the screen. The information provided by this help system makes it unnecessary for the user to carry the extensive operator manual.

Numerous values can be displayed on the screen and printed, for example statistical information for the transit authority such as

- Power consumption and recuperation (as an option)
- Operating hours, vehicle mileage
- Number of operation of electromagnetic contactors
- Fault incidents (e.g. overcurrent trips) with time records

Numerical and/or logical variables can be displayed in the course of trouble shooting, testing or commissioning. The variables can be freely configured on the screen and observed while the vehicle is moving. With this facility, the individual values required for assessing certain operational conditions are continually visible.

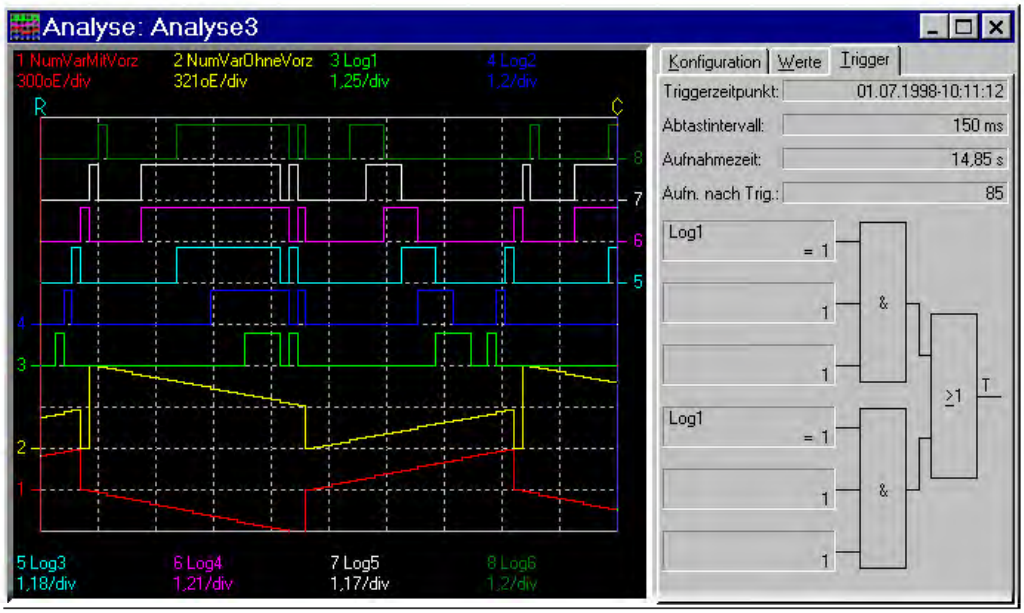

Figure22: analysis

Thereby the numerical and analogue values are displayed synoptically on the screen graphically together with the physical dimensions, for example torques in Nm, accelerations in m/s², speeds in km/h, currents in A, voltages in V, etc. This display mode avoids manual conversion calculations which are otherwise a common source of errors. The displays are provided in real time and can be recorded within certain limits.

Sporadic faults or operating conditions which are not easily reproducible can often be traced only with considerable effort when using *conventional* technology. In this case extensive test equipment and personnel are required, long downtimes are involved and usually a good measure of luck is needed. With the DIAGNOSTIC AID the user can freely define the event-trigger conditions. When one of the predefined conditions arises (for example a vehicle speed > 50 km/h together with a braking deceleration of - 0.5 m/s² and at the same time a feedback current < 183 A), all electrical data around the time of the trigger condition are stored and the trigger-event is displayed. This reduces the amount of data to the required minimum, but nevertheless, the data storage time before and after the event can be chosen within wide limits. This leads to a considerable reduction of the data volume. Subsequent evaluation of the recordings and possibly redefinition of the trigger conditions can be carried out on an office PC or in the field on board the vehicle with a laptop PC.

Useful test routines are incorporated in the diagnostic software to enable the user to check correct functioning of the control equipment. The software can be adapted in the case of system extensions. When faults are detected, the possible causes can be displayed together with instructions for suitable remedies.

A designation can be assigned to identify the connected unit, e.g. the vehicle number or a device number. All recordings then contain this number to facilitate subsequent association. This also facilitates further processing and evaluation of the collected data.

Limit value settings (e.g. maximum or minimum currents, voltages, speeds, set-points, etc.) can be changed via an access authorization system using a PIN.

7.5 Supplementary data

The data stored in the data memory unit can be displayed in tabulated form together with further supplementary information. This makes possible exact evaluation of the operating states. It is also possible to use this data in other external programs for statistical evaluation.

7.6 Trigger function

Freely selectable trigger functions make it possible to log operating states in detail. A composite condition consisting of status variables such as currents, speeds or switching states of certain contactors can be defined for starting continuous recording of the desired data and measurement readings when the condition appears. Faults can be detected and analyzed by subsequent evaluation of the recorded data.

7.7 File management

The file management is a very important function of the diagnostic aid software. It can be used for convenient sorting and administration of the numerous collected data without re-sorting to utility programs outside the diagnostic aid software.

8 TECHNICAL DOCUMENTATION

The following performances are included within the system planning. The language is English.

- Technical documentation (description of propulsion control, maintenance instructions, spare parts lists)
- Commissioning/testing documents (Testing and electrical measuring instructions).
- Preparation of circuit diagrams and bills of material
- Preparation of propulsion perfermance diagrams
- Preparation of detailed dimension drawings (components, spare parts)

9 SOFTWARE

The software supplied by Vossloh Kiepe is subject to copyright or trademark or patent. If you place an order with us we grant you a non-transferable and non-exclusive right to use for your own internal purposes in connection with above-mentioned equipment. Use for other purposes is prohibited. Please ensure that our software and the respective documentation are not made available to third parties.

10 SPARE PARTS AND MAINTENANCE

Provision of fit and function compatible spare parts is guaranteed for the nominal service life of 30 years. Experience has shown that provision of spare parts beyond this period is usually also ensured.

The equipment offered is so designed that it works with minimum maintenance. Maintenance can be performed with simple means; no special tools are required for this task. Moreover, our diagnostic aid makes it possible to rapidly localize the reason for a disabled state.

11 ACCEPTANCE

CAF is responsible for the approval of the vehicles, the type test and the acceptance by the safety regulatory authority. Vossloh Kiepe prepare the documents concerning the equipment supplied by Vossloh Kiepe available to CAF, based on the requirements of BOStrab.

The simulated perfomances are described by traction diagrams. Representative the maximum performance diagram as follows, for the other diagrams please consider the attached file “Edinburgh_Diagramme.pdf”.

CAF - Edinburgh Tram

Vossloh KIEPE GmbH 13.07.07
DÜSSELDORF 13070700
Abt. E2

Edinburgh Tram Network

Performance Diagram
AW2 load

Weight of vehicle..... 54.84t
Pay load..... 18.47t
Line voltage Mo/Br..... 750V/ 900V
Grade..... 0.00%
Distance between stops..... 670.0m
Dwell time..... 25.0s
Wheel diameter..... 590mm
Gear ratio..... 5.440/ 1
Max. acceleration..... 1.20m/s²
Mean acceleration 0 - 70 km/h.. .80m/s²
Max. deceleration..... 1.30m/s²
Mean deceleration..... 1.20m/s²
Adhesion coefficient Mo/Br..... .17 / .17
RMS line current tot/Mo..... 888A/ 718A
Journey speed..... 31.7km/h
RMS motor current..... 99A
Energy drawn from line..... 7235.3Wh
Dynamic brake energy..... 4124.1Wh
Total energy consumption..... 3111.2Wh

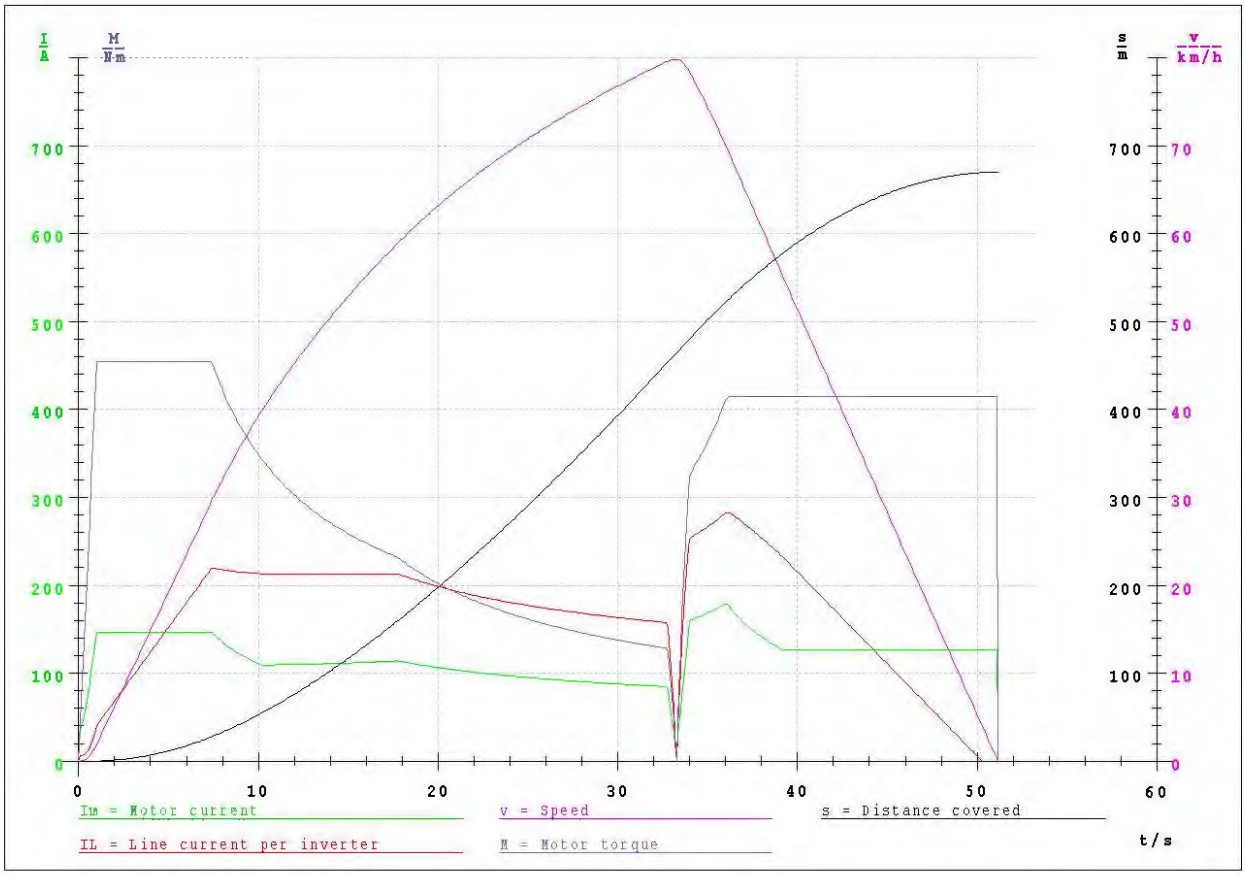

12 EMC CONCEPT

Our equipment has been tested in accordance with the valid EMC directives EN 50121. By way of screening the pulse-loaded lines and separate laying we try to keep the electro-magnetic emission through the power laying as low as possible. CAF is deemed responsible for the EMC concept of the entire vehicle.

13 OPTIONAL EQUIPMENT : ULTRA- CAPS FOR INCREASED ENERGY SAVINGS

The experience of various trams systems and its explotations shows that use of recuperated brake energy is important and in fact executed, but there is room for optimisation. In several applications it was measured that the overhead line is not always receptive and is not allowing recuperation. In these cases the energy is given to the brake resistor and transformed into heat.

The use of Ultra Cap shall avoid the dissipation of brake energy in the brake resistor as much as possible. The surplus of energy which is not accepted by the overhead line is stored into the Ultra Cap and used for the next acceleration movement of the tram.

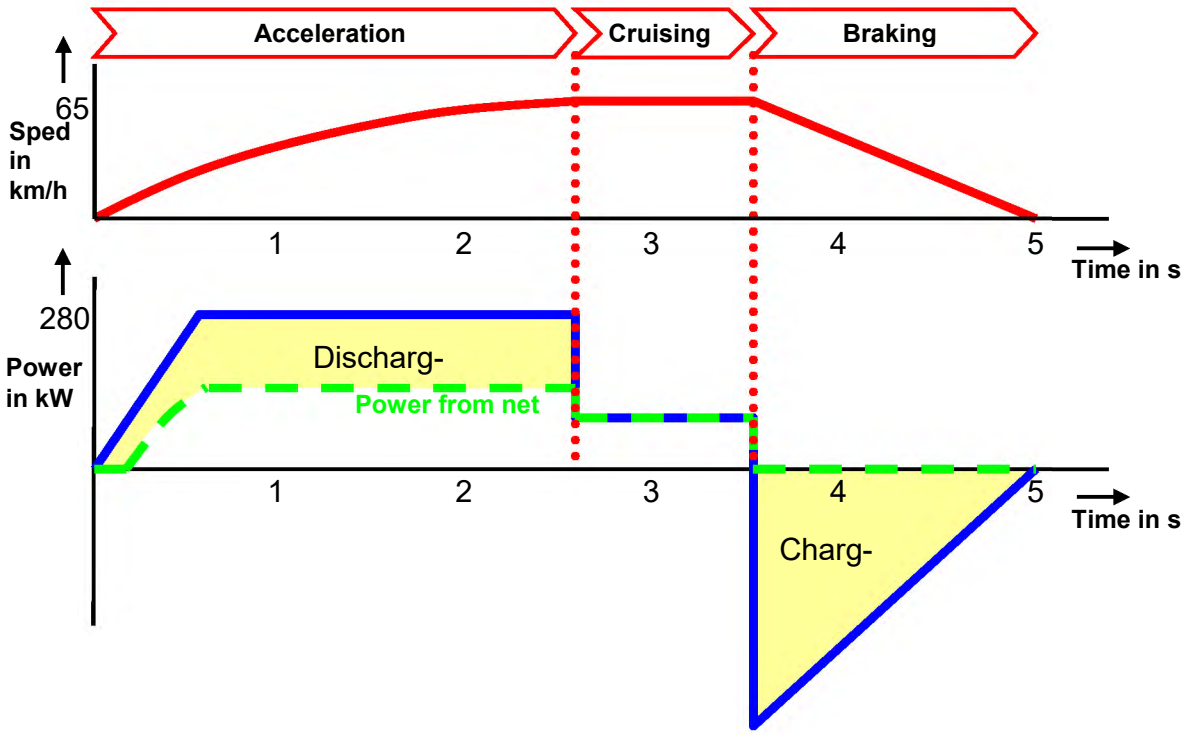

Depending of the capacity of the Ultra Cap and the structure of the overheadline (sections, bridged areas ,directions) a variable portion of energy can be saved.

The Ultra Cap was already installed in a trolley bus application and in addition to a recuperation ratio to the overhead network of 16,8% it was possible to store another 22,8% by use of the Ultra Caps.

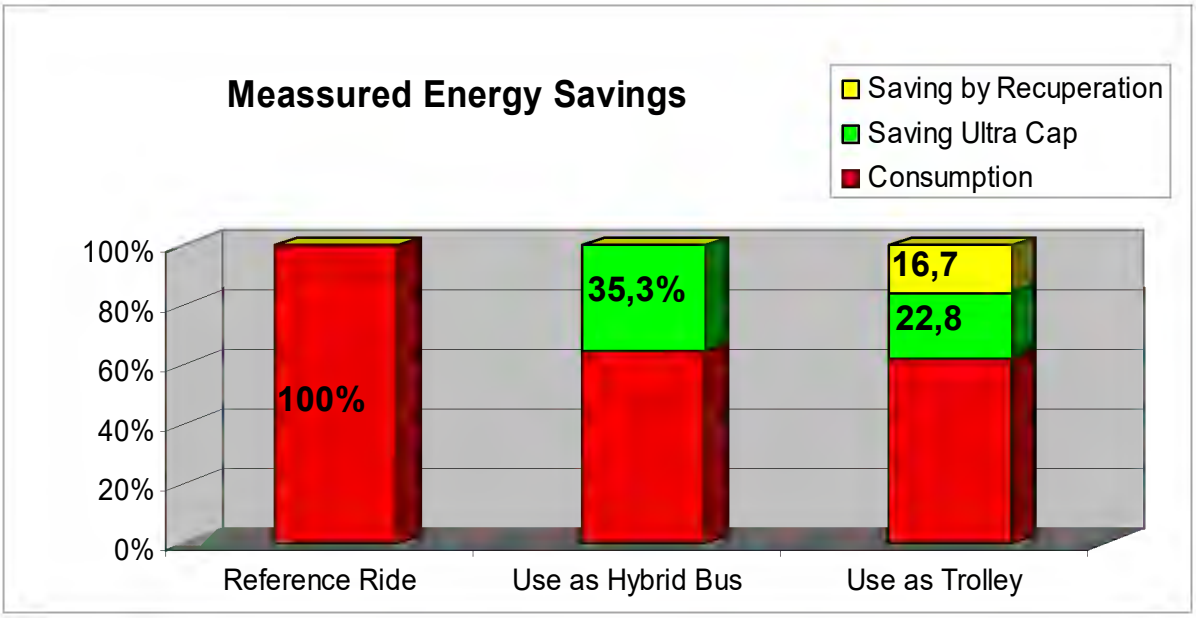

13.1 Ultra Cap Modules

The Ultra Caps are grouped in modules of which each has a capacity for storing 0,25kW/h of energy.

Picture: 2 Ultra Cap modules

Technical data –Ultra Cap module	
Stored energy	0,25kWh

Weight	150 kg
Dimensions	1100*600*250mm

13.2 Step up inverter

The energy management and controll of the Ultra Caps is done in the Step-Up-Inverter. This unit attaches the Ultra Cap voltage to the vehicle power line.

Technical data – Step Up Inverter	
Voltage	0-750V
Control voltage	DC 24 V +25%- 30 %
Weight	90Kg
Dimensions of the container	950*500*400mm

13.3 Allocation on vehicle

The position of the components allows certain flexibility to the vehicle manufacturer.

The cable length between step-up- inverter and each Ultra cap module is to be determined by the expected dynamic energy flow but to our expectation is should be in the range of up to 8-10 m

CAF - Edinburgh Tram

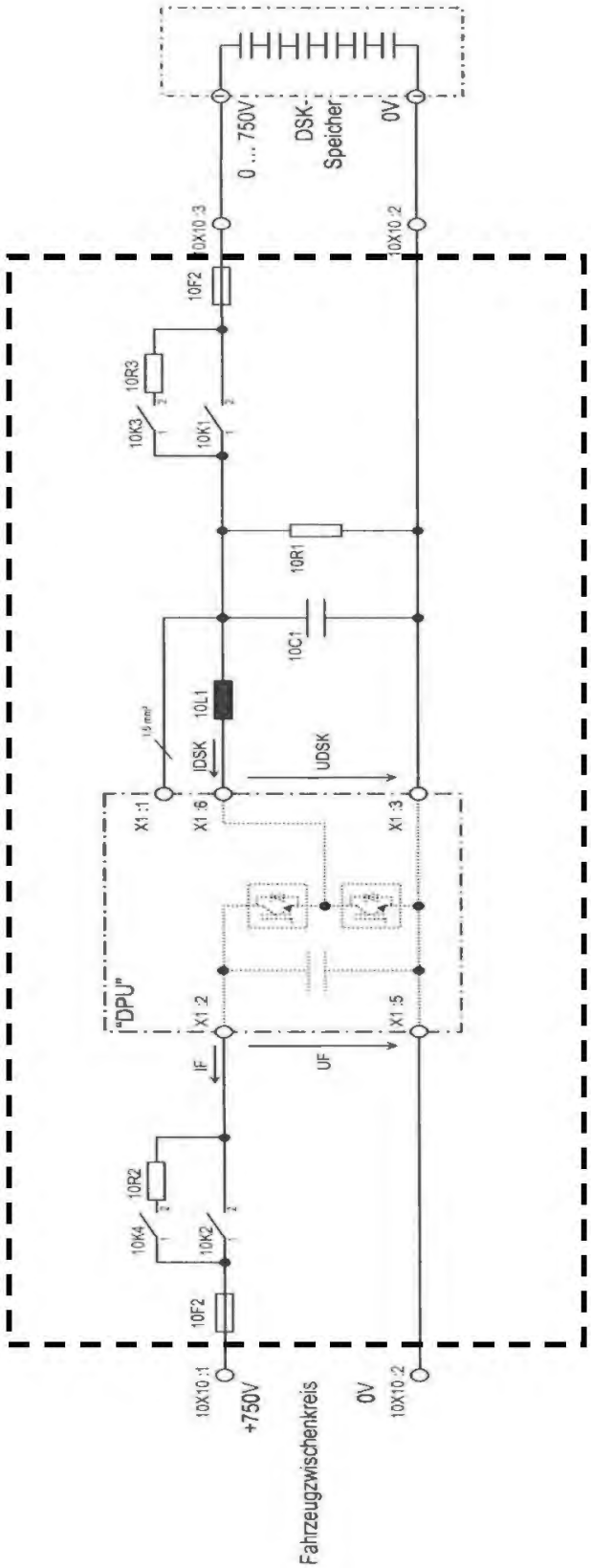

Picture: Electrical circuit of Step-up- Inverter

14 OTHER MATTERS

This offer is based on the presupposition that the quoted devices can be adapted to the installation spaces in the Edinburgh LRV without considerable changes in design.

Vossloh Kiepe's equipment does not require a compressed air supply. A compressor is not included in this tender.

15 WORK ON THE PROJECT:

- system development,
- calculations,
- documentation, spare-parts catalogues, maintenance instructions,
- circuit diagrams for Vossloh Kiepe equipment
- production of test reports.

Basis for our offer is our technical description (printed above).

According to our scope of supply, the equipment is tested in the Vossloh Kiepe factory but will be installed, wired and connected by CAF. Vossloh Kiepe will support CAF with the commissioning of our equipment for the first unit. Commissioning of the other vehicles by our experienced technicians is available as an option.

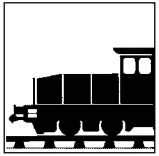

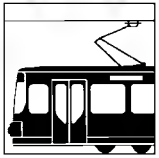
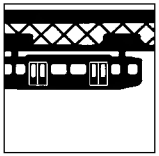

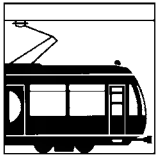

Operating Device for Driving and Braking Series SGW 200

KIEPE ELEKTRIK

Device ID No.: 91.050 101.001 – /.003, /.006 – /.009 und /.011, /.014, /.015
91.049 172.001; 91.053 223.001

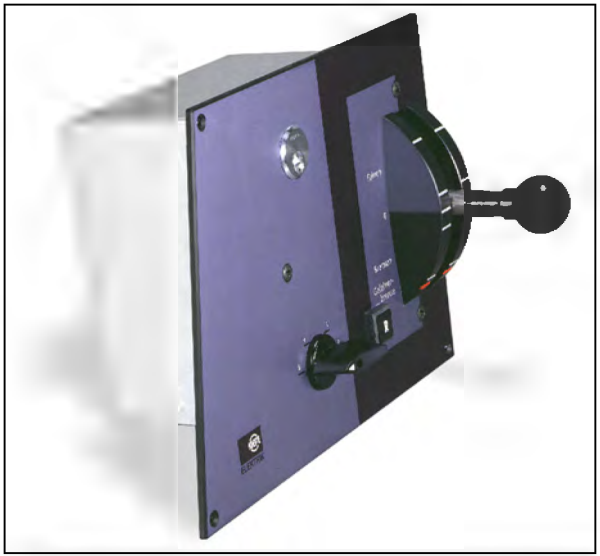

OPERATING INSTRUCTIONS

USB00000086_0491

Contents

1 For your own Safety 5
1.1 Intended Use 5
1.2 Symbols 5
2 Transport, Packing, Storage, and Disposal 6
2.1 Transport and Packing 6
2.2 Storage 6
2.3 Disposal 6
3 Structure and Function 7
3.1 Structure 7
3.2 Function 8
4 Technical Data 12
4.1 Overview of Models 12
4.2 General Technical Data 12
4.3 Dimensions 14
5 Mounting and Dismounting 18
5.1 Scope of Delivery 18
5.2 Mounting 18
5.3 Dismounting 20

6 Operation 21
6.1 Start 22
6.1.1 Drive 23
6.1.2 Brake 24
6.1.3 Hazard Brake 24
6.2 Interrupt Driving 24
6.3 Stop Driving 25
7 Maintenance 26
8 Repair 26

1 For your own Safety

1.1 Intended Use

The operating device models SGW for driving and braking are used to control the driving direction as well as the drive and brake power in electrical track vehicles. The operating device for driving and braking meets the high requirements of the appropriate rail transport regulations.

Applications other than specified and unauthorized modifications to the device or its components may lead to injury to persons and damage to the device for which the manufacturer is **not liable**.

"Intended Application" means that any work performed with the device or on the device must be carried out in accordance with these **operating instructions**. Only **qualified personnel** that are familiar with the **regulations for the prevention of accidents** as well as the standard safety rules, are allowed to work on the device.

This will ensure that you protect yourself and prevent damage to the device!

1.2 Symbols

Please pay particular attention to the text passages that are marked with the following symbols:

Danger!
Information that must be observed under all circumstances in order to prevent the operator from being injured.

Attention!
Information that must be observed in order to prevent damage to the device.

Helpful additional information.

2 Transport, Packing, Storage, and Disposal

2.1 Transport and Packing

Choose a suitable packing in order to prevent damage to the device during transport or when sending devices or components to Vossloh Kiepe GmbH for repair. Take great care that the device is protected against shocks and humidity. Thus, damage due to transport is prevented, for which the manufacturer is not liable.

2.2 Storage

Avoid significant variations in temperature that may cause the formation of condensation water, as this might damage the device.

The permissible storage temperature is between -25°C to +70°C.

Attention!
Keep the device clean and dry.

2.3 Disposal

If possible, reuse the **packing material** or dispose of it in an environmentally friendly way.

Send **defective devices and components** to Vossloh Kiepe GmbH for correct recycling or disposal *(see company address on back page)*.

3 Structure and Function

3.1 Structure

The operating device model SGW for driving and braking is a tough, electromechanical device for the mounting into electrical track vehicles. It is used to control the driving direction and the drive and brake power and thus the speed. Moreover the driver‘s ability to act is monitored by means of a dead man function. The operating device contains the following **operating elements**, which are described in *section 3.2 (s. fig. 3-1)*:

- a drive-brake lever (**1**) with integrated dead man function,
- a driving direction selection switch (**2**),
- a key-operated switch (**3**), and
- a button "R" (**4**).

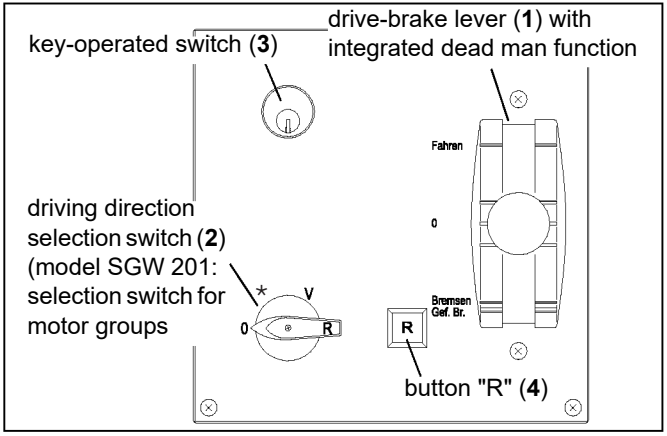

Fig. 3-1: Operating device model SGW – operating elements

By means of the operating device model **SGW 201** you are *not* enabled to change the driving direction but to select motor groups (1 + 2, 1 only, or 2 only) with the selection switch (**2**). Thus, it is possible to switch off a defective drive unit *(s. fig. 4-2)*.

The operating device model **SGW 208** is additionally equipped with the buttons "cleaning", "battery on", "battery off", and "light" *(s. fig. 4-5)*.

The **mechanical** and **electrical systems** are assembled on a mounting base plate, which is located below the cover plate (**5**) *(s. fig. 3-2)*. They are protected by a hood (**6**). The operating device is inserted into the control panel of the driver‘s cabin, so that only the cover plate (**5**) and the operating elements are visible.

The electrical connection is done by two 24-pole connection plugs (**8**) X1 and X2 *(s. fig. 3-2)*. The operating device model SGW 208 is provided with another 24-pole connection plug (**9**) X3 for connecting additional buttons *(see enclosed wiring diagram)*.

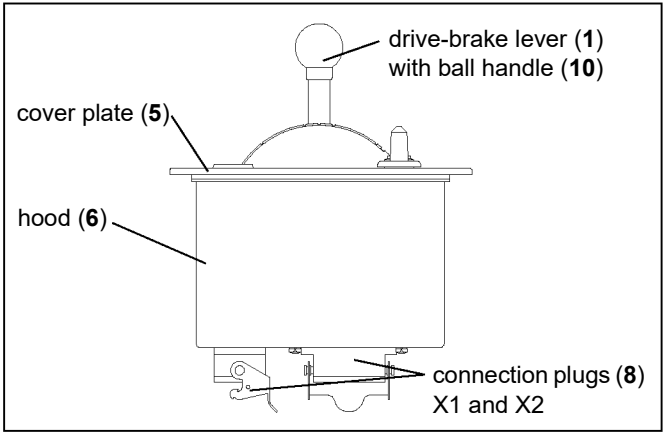

Fig. 3-2: Operating device model SGW

3.2 Function

By means of the **key-operated switch (3)** you lock and unlock the drive-brake lever (**1**) and the driving direction selection switch (**2**) *(see chapter 6 „Operation“)*. It is only possible to pull out the key if the drive-brake lever (**1**) is set to 0° (rest position) and the driving direction selection switch (**2**) to „0“, „✶“, or „1“ *(s. fig. 3-3 and 3-5)*.

The selection switch (**2**) for the motor groups of the operating device model **SGW 201** can only be turned if the key-operated switch (**3**) is set to position OFF *(s. fig. 3-3)*. The key can only be pulled out, if the drive-brake lever (**1**) is set to the rest position.

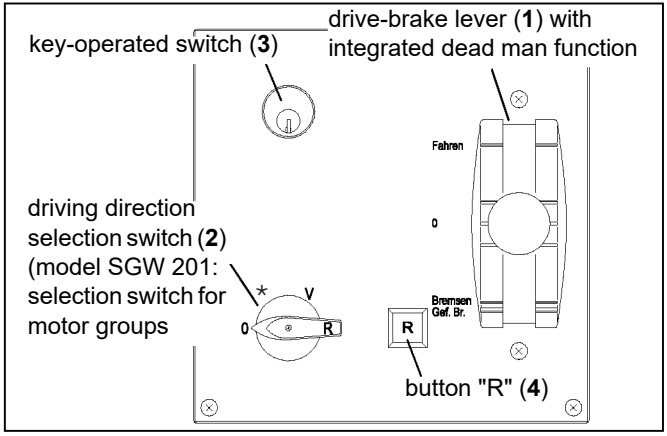

Fig. 3-3: Operating device model SGW – operating elements

The operating device is operated with the **drive-brake lever (1)** *(s. fig. 3-3)*. The drive-brake lever (**1**) has five operating ranges, which are marked on the scale (**11**) *(s. fig. 3-4)*:

Operating range	deflection
drive	+ 37.8° to + 9°
cruise control	+ 9°
rest position	0° to + 9° or 0° to – 9°
brake	– 9° to – 37.8°
hazard brake	– 37.8° to – 43.8°

The drive-brake lever (**1**) is moved from the *rest position* to the operating ranges *drive* or *brake*. The operating device for driving and braking SGW is designed so that the more you move the drive-brake lever (**1**) to the range *drive* or *brake*, the larger is the acceleration or the slowing down. If you want to drive at constant speed *(cruise control)*, pull the drive-brake lever (**1**) to the operating range cruise control (+ 9°) at the required speed after having accelerated. However, the drive control determines the performance of this function.

In case of a dangerous situation you can activate additional brake systems by setting the drive-brake lever (**1**) to the operating range *hazard brake*.

To avoid activating the *dead man function*, the ball handle (**10**) of the drive-brake lever (**1**) must be pressed during driving, otherwise a forced brake is released.

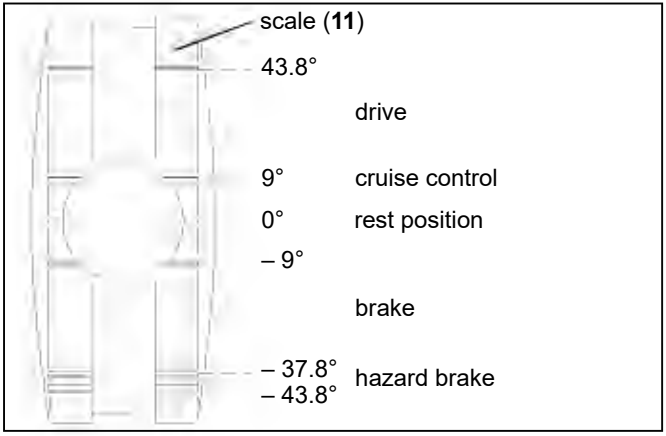

Fig. 3-4: Operating ranges of the drive-brake lever

The drive-brake lever (**1**) can only be moved if the **driving direction selection switch (2)** is set to position ✶ or R *(s. fig. 3-5)*. By means of the driving direction selection switch (**2**) the following operating modes can be set:

0 vehicle in rest position

✶ or 1 retrofitting the vehicle

V drive forwards

R drive backwards

Position 0:

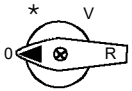

Vehicle in rest position

The drive-brake lever (**1**) must be set to position „0“ and is blocked in this position. By means of the key-operated switch (**3**) you can lock and remove the key.

driving direction selection switch (**2**)	key-operated switch (**3**)	deflection of the drive-brake lever (**1**)
0	unlocking the cylinder lock	hazard brake; in pos. 0 blocked
✶ or 1[1]	key can be pulled out	
V	cylinder lock locked	brake[2]; position 0; drive[2]
R	key cannot be taken out	

[1]The driving direction selection switch (**2**) can be set to position 0 when the key is taken out.

[2]In this range the driving direction selection switch (**2**) is blocked.

Fig. 3-5: Function diagram

Position ✶ or 1: Retrofitting the vehicle

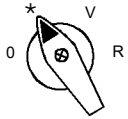

The drive-brake lever (**1**) must be set to position „0“ and is blocked in this position. The driving direction selection switch (**2**) must be unlocked with the key-operated switch (**3**).

If the driving direction selection switch (**2**) is in position "✶" or "1", the key-operated switch (**3**) can relock and the key can be taken out. The vehicle stays retrofitted, but cannot be moved. Nevertheless, the driving direction selection switch (**2**) can be reset to position 0.

Position V: Drive forwards

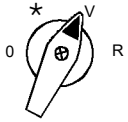

The drive-brake lever (**1**) is unlocked. Driving forwards is released. The key-operated switch (**3**) is locked and the key cannot be taken out. If the drive-brake lever (**1**) is moved to range *drive* or *brake*, the driving direction selection switch (**2**) is locked.

Position R: Drive backwards

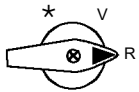

In order to turn the driving direction selection switch (**2**) into position R, button "R" (**4**) must simultaneously be pressed. The drive-brake lever (**1**) is unlocked. Driving backwards is released. The key-operated switch (**3**) is locked and the key cannot be taken out. If the drive-brake lever (**1**) is moved to range *drive* or *brake*, the driving direction selection switch (**2**) is locked.

With the operating device model **SGW 201** you cannot change the driving direction, but select the motor groups of the cars with the selection switch (**2**). The selection switch (**2**) can only be turned when the key-operated switch (**3**) is set to OFF. It is possible to select the motor groups 1 + 2 simultaneously or individually *(s. fig. 4-2)*.

4 Technical Data

4.1 Overview of Models

Device model	Device ID no.	Wiring diagram	Operating modes	Particularity
SGW 201	91.049 172.001	3 SP 2976 / 2	0 – 1+2 – 1 – 2	possible to switch off a drive unit
SGW 202	91.050 101.001	3 SP 3088 / 2	0 – 1 – V – R	
SGW 203	91.050 101.002	3 SP 3095 / 2	0 – ✶ – V – R	
SGW 204	91.050 101.003	3 SP 3088 / 2	0 – ✶ – V – R	
SGW 205	91.053 223.001	3 SP 3198 / 2	Off – Aux only – For	no backwards
SGW 206	91.050 101.006	3 SP 3222 / 2	0 – 1 – V – R	
SGW 207	91.050 101.007	3 SP 3326 / 2	0 – 1 – P – T	with Polish labelling
SGW 208	91.050 101.008	3 SP 3328 / 2 and /4	0 – ✶ – V – R	additional buttons for cleaning, battery on and off, and light off
SGW 209	91.050 101.009	3SP3398 / 2	0 – 1 – V – R	
SGW 211	91.050 101.011	3SP3426 / 2	0 – ✶ – V – R	
SGW 214	91.050 101.014	3 SP 3740 / 2	0 – 1 – V – R	
SGW 215	91.050 101.015	3 SP 3740 / 2	0 – 1 – V – R	shorter drive-brake lever (**1**)

4.2 General Technical Data

Rated operating voltage	24 V DC, permissible tolerance 16.8 V to 30 V
Permissible ambient temperature	- 25 °C to + 70 °C (VDE 0660, part 14)
Type of protection	IP 20 according to DIN VDE 0470, part 1 (EN 60529)

Mechanical fastening	four appropriate countersunk screws M 5
Mounting dimensions	*(s. section 4.3 Dimensions)*
Weight	approx. 8 kg

Angle encoder

Code and resolving	8 bit Petherick; 100 steps/rotation 2 bit-running *(s. wiring diagram)*
Rated operating voltage	10 V DC to 30 V
Current consumption	100 mA (24 V, without load)
Interface	10 bit-parallel outlet
Outlets	NPN (N-switching) towards internal PULL-Up 12 kΩ (max. 100 mA)
Switching frequency	50 kHz
Checkvoltage	U_p = 500 V AC, 50 Hz (t = 1 min) (VDE 0660 part 1; DIN 43321)

Snap switch (dead man device, key-operated switch and switch block)

Mechanical service life	at least 10 million switching operations
Rated continuous current I_{th}	6 A
brief peak load	10 A
Actuating force (dead man function)	approx. 6 N

Driving direction selection switch

Rated operating voltage	6 – 72 V DC
Rated continuous current I_{th}	6 A
Switching capacity	AC-21A: 24 V / 5 A; DC-1 (τ < 1 ms): 24 V / 2.2 A

4.3 Dimensions

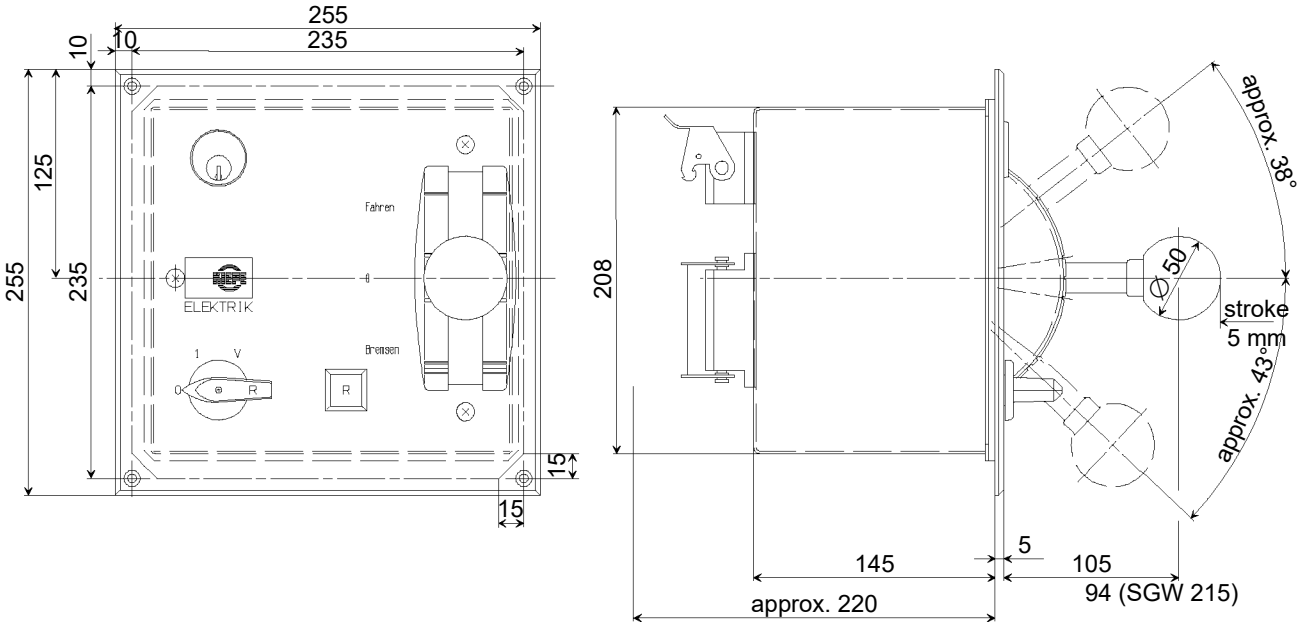

If not listed differently, the various models have the same mounting dimensions.
The mounting dimensions only differ in different cover plate models.

Fig. 4-1: Mounting dimensions of the operating devices SGW 203, 206, 207, 209, 214 and 215

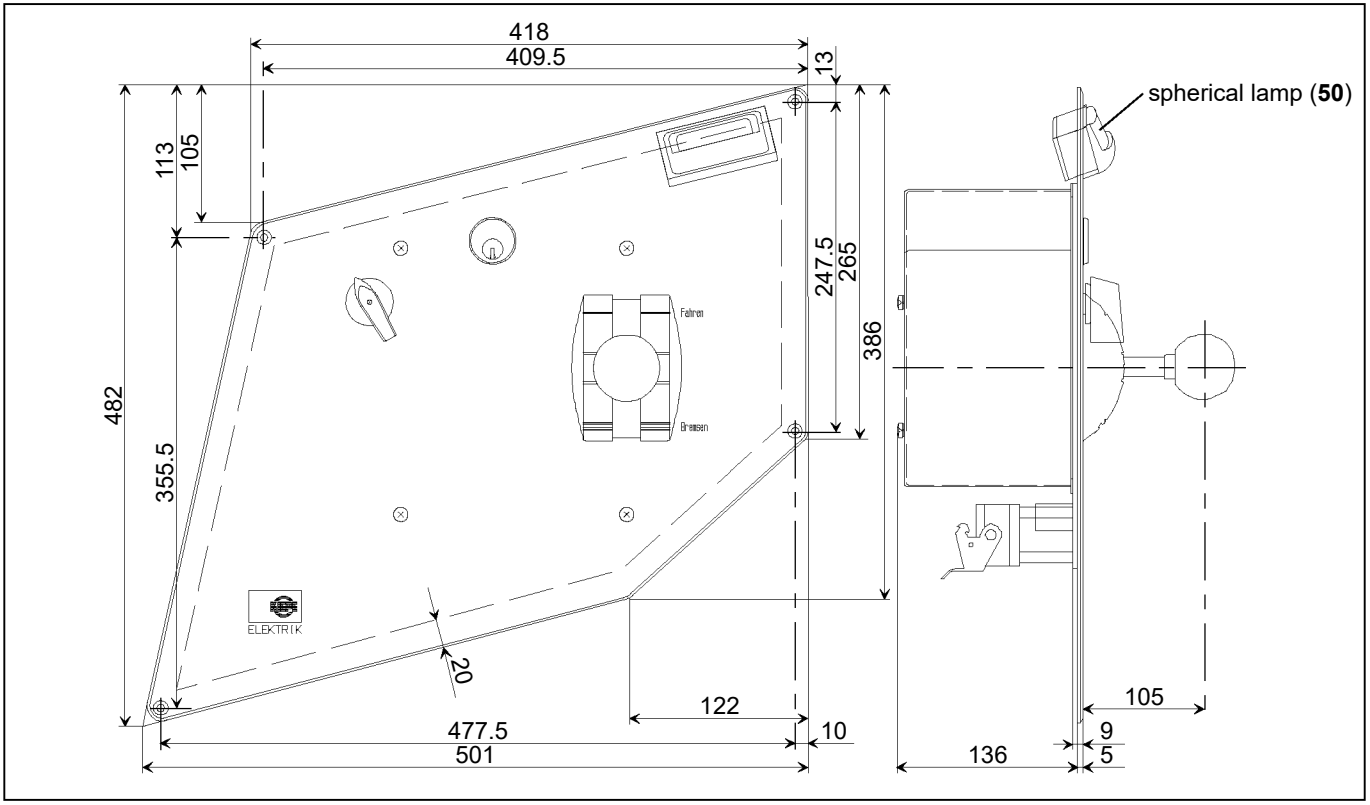

Fig. 4-2: Mounting dimensions of the operating device SGW 201

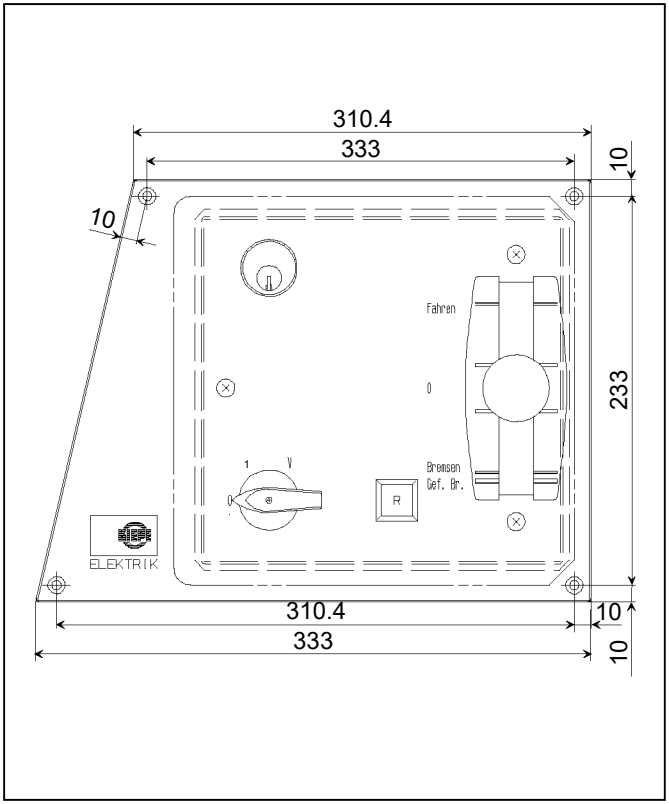

Fig. 4-3: Mounting dimensions of the operating device SGW 202 and SGW 211

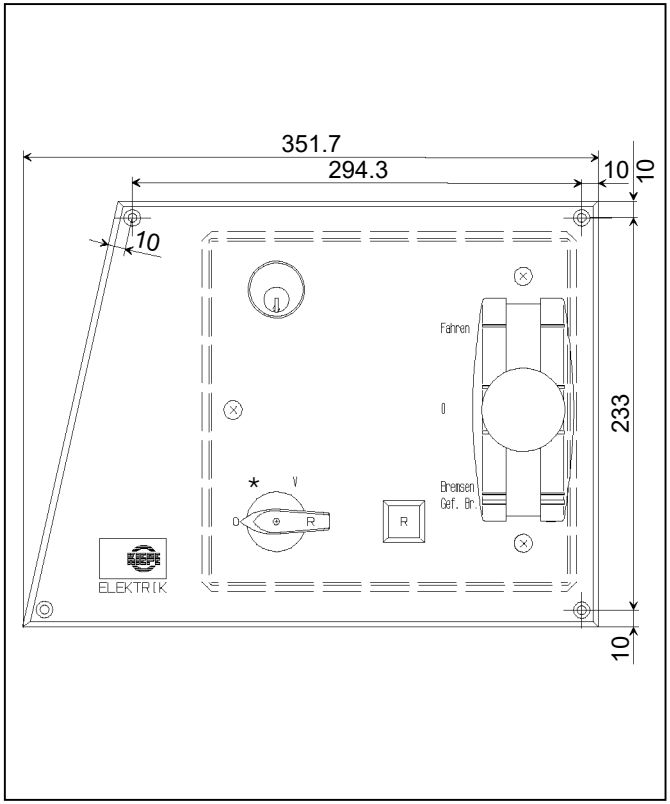

Fig. 4-4: Mounting dimensions of the operating device SGW 204

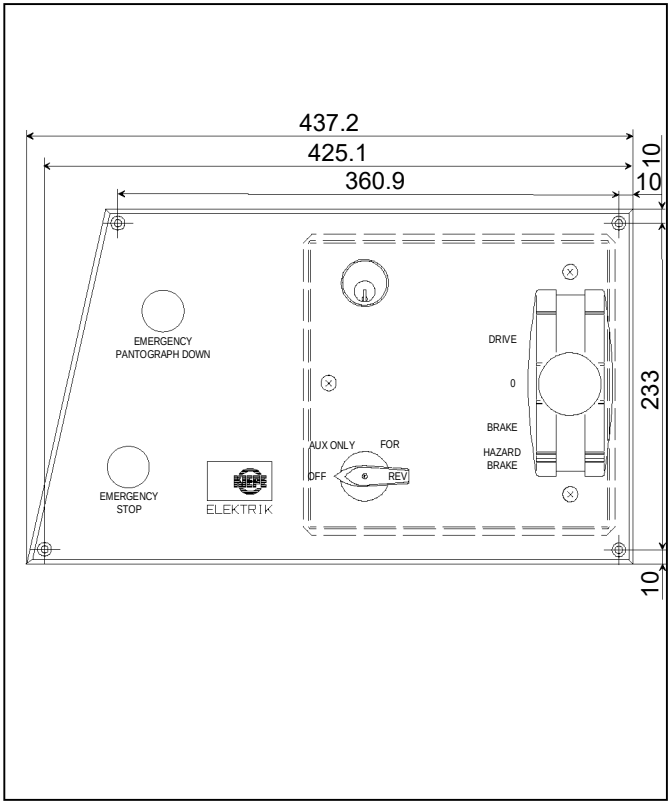

Fig. 4-5: Mounting dimensions of the operating device SGW 205

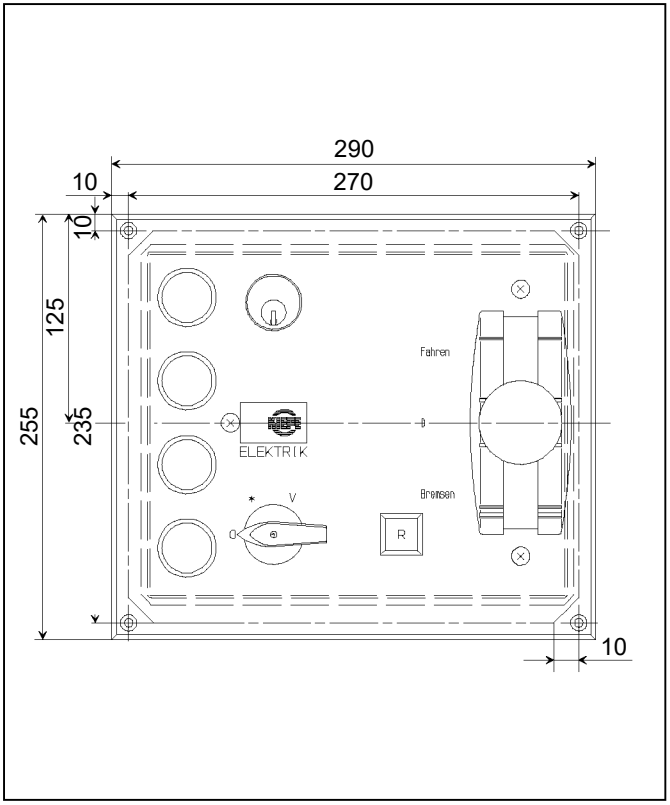

Fig. 4-6: Mounting dimensions of the operating device SGW 208

5 Mounting and Dismounting

5.1 Scope of Delivery

The operating device for driving and braking is supplied in a ready to mount state. The electrical connection is done by two or three 24-pole connection plugs (**8**). These operating instructions and a wiring diagram are also part of the scope of delivery *(s. section 4.1 Overview of Models)*. Screws for the mechanical fixing do not belong to the scope of delivery.

5.2 Mounting

Danger!
Secure the vehicle against rolling away.

Danger!
Before starting to mount, disconnect the machine from the power supply. Secure the machine against being switched on again.

Caution!
The operating device has a weight of approx. 8 kg. Always mount or dismount with two persons, in order to protect the operating device from being damaged.

Caution!
The installation site must be dry, free from aggressive gases and vapours, as well as almost free from dirt.

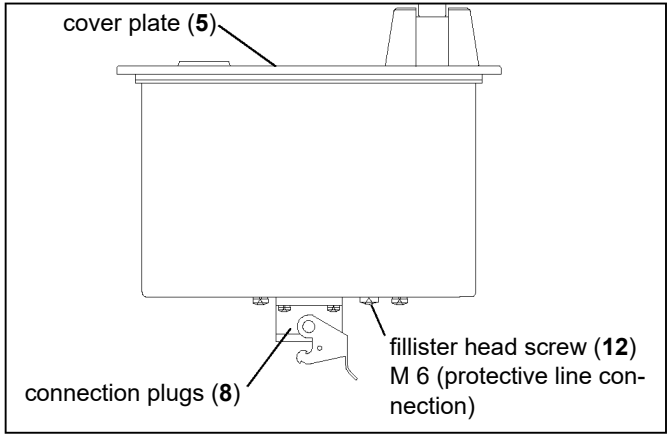

Fig. 5-1: Mounting the operating device – connection

1. Secure the vehicle against rolling away.
2. Before starting to mount, disconnect the machine from the power supply and secure the machine against being switched on again.
3. Prepare the installation site. Please take the dimensions of the required installation site from *section 4.3 Dimensions*.
4. Carefully insert the operating device into the corresponding recess of the control panel of the driver‘s cabin, so that you can connect the operating device.

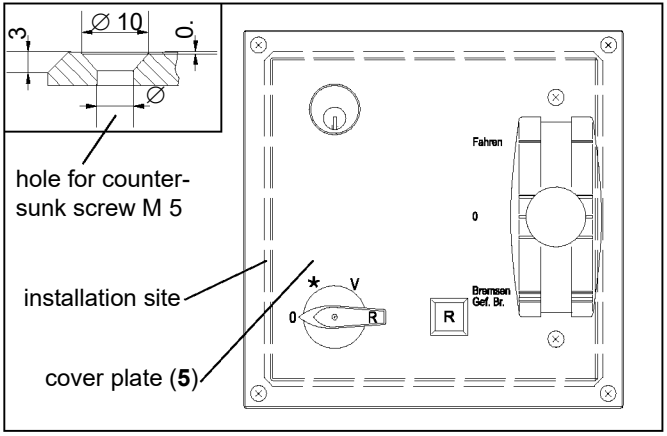

Fig. 5-2: Mounting the operating device – fastening

Danger!
Observe the enclosed wiring diagram *(see section 4.1 Overview of Models)*!

5. Connect the operating device with the connection plugs (**8**) X1 and X2 *(s. fig. 5-1)*.
   SGW 208: Additionally connect the buttons by means of the connection plug (**9**) X3.
6. Connect the protective line to the fillister head screw (**12**) M 6.
7. Completely insert the operating device into the control panel of the driver‘s cabin.
8. Fix the operating device with four appropriate countersunk screws M 5 to the outer corners of the cover plate (**5**). Secure the countersunk screws with a screw lock agent *(s. fig. 5-2)*.
9. Accurately check the function of the operating device after having finished the mounting *(s. chap. 3 and particularly fig. 3-5)*.

5.3 Dismounting

Danger!
Secure the vehicle against rolling away.

Danger!

Disconnect the machine from the power supply before starting to dismount. Secure the machine against being switched on again.

Caution!

The operating device has a weight of approx. 8 kg. Always mount or dismount with two persons, in order to protect the operating device from being damaged.

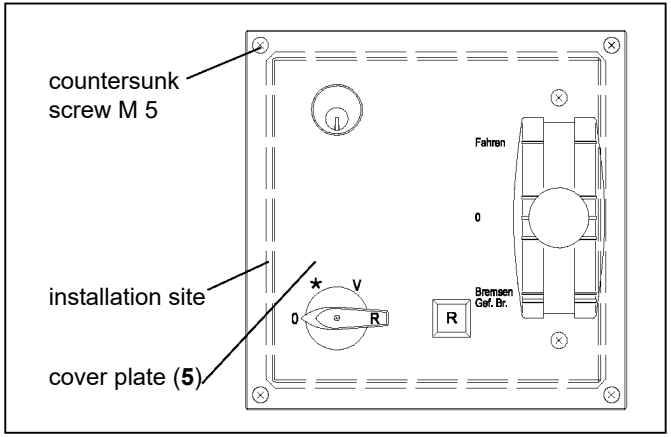

Fig. 5-3: Dismounting the operating device

1. Secure the vehicle against rolling away.
2. Before starting to mount, disconnect the machine from the power supply and secure the machine against being switched on again.
3. Loosen the four countersunk screws M 5 in each corner of the cover plate (**5**) *(s. fig. 5-3)*.
4. Carefully lift out the operating device, so that the connection plugs (**8**) X1 and X2 and the protective line can be loosened.

   Also loosen the connection plug (**9**) X3 of the SGW 208.
5. Now completely lift out the operating device of the installation site.

6 Operation

Danger!
Operating during driving mode must only be performed by personnel authorised by the tranport services.
Read the function description, before operating the operating device for the first time *(see section 3.2 Function)*.

By means of the drive-brake lever (**1**) you control the nominal value indicator *(s. fig. 6-1 and 6-2)*. The more you press the drive-brake lever (**1**) to range *drive*, the larger the acceleration. If you press the drive-brake lever (**1**) to range *brake*, the vehicle gets slower until it stops.

The range *hazard brake (Gef.-Br.)* is provided for **dangerous situations**. If you pull the drive-brake lever (**1**) to range *hazard brake (Gef.-Br.)*, all brake systems of

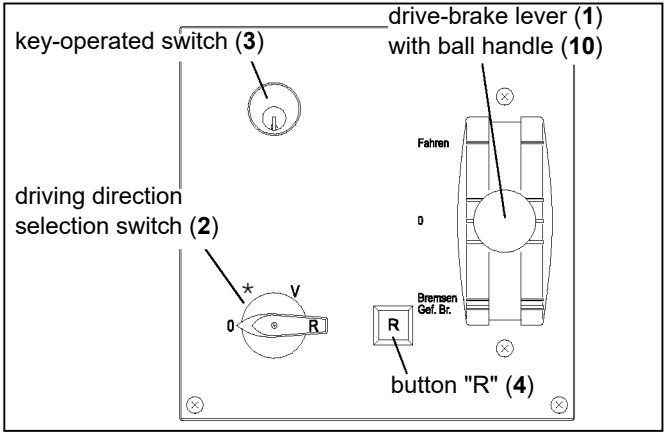

Fig. 6-1: Operating elements of the SGW

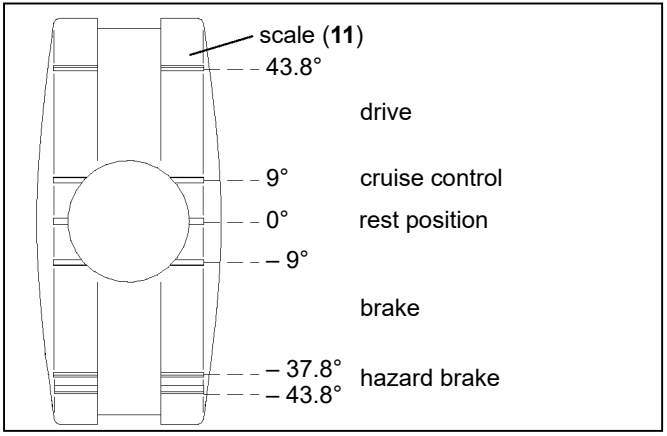

Fig. 6-2: Operating ranges of the drive-brake lever

the vehicle are released for stopping the vehicle as soon as possible.

As an additional safety device, a **dead man button** is integrated into the operating device, which monitors the driver‘s ability to act during the operation period. If you do not keep on pressing the drive-brake lever (**1**) for a certain period of time during driving, a forced brake is released.

Danger!
The drive control dermines the performance of this function. Before starting to drive, inform yourself about the drive control model of your vehicle.

6.1 Start

Model SGW 201

You can only turn the selection switch (**2**) for the motor groups, if the key-operated switch (**3**) is still in position OFF *(s. fig. 4-2)*.

1. Select one of the positions 1 + 2, 1, or 2.
2. Turn the key in the key-operated switch (**3**) by 90° in order to switch on the operating device.

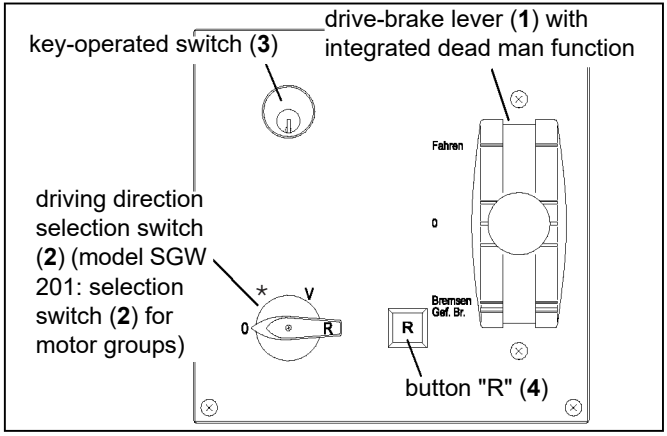

Fig. 6-3: Operating elements of the operating device model SGW

Models SGW 202 to 209 and 211, 214, 215

3. Put the key into the key-operated switch (**3**) and turn it clockwise by 90° for unlocking the drive-brake lever (**1**) and the driving direction selection switch (**2**) *(s. fig. 6-3)*.
4. Turn the driving direction selection switch (**2**) to position ✶ or 1 for retrofitting the vehicle.
5. Select the driving direction with the driving direction selection switch (**2**):

The operating device model SGW 205 is not provided for driving backwards.

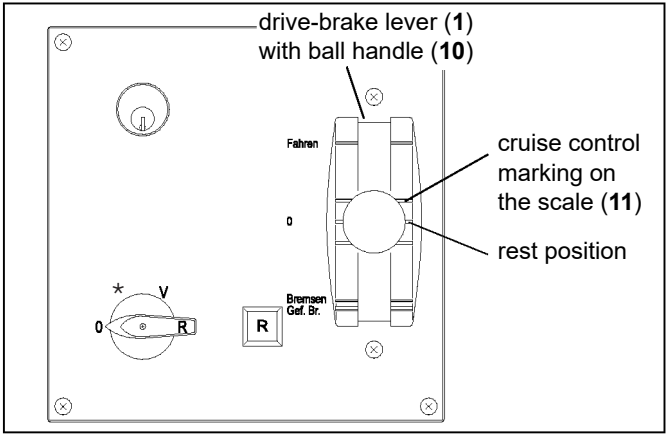

Fig. 6-4: Operating elements of the SGW – cruise control

– Forwards
  Turn the driving direction selection switch (**2**) to position „V“.
– Backwards
  Press button "R" (**4**) and simultaneously turn the driving direction selection switch (**2**) into position „R“.

6.1.1 Drive

1. Press the drive-brake lever (**1**) for activating the dead man function *(s. fig. 6-3)*.

Danger!
Keep the drive-brake lever (1) continuously pressed during driving, as otherwise a forced brake is released.

2. Move the drive-brake lever (**1**) to range *drive*.

The more you press the drive-brake lever (**1**) to range *drive*, the larger is the acceleration.

3. Accelerate the vehicle, unitil it has reached the required speed.
4. For keeping the vehicle at a constant speed *(cruise control)*, pull back the drive-brake lever (**1**) to the first marking of the scale (**11**) *(s. fig. 6-4)*.

6.1.2 Brake

1. Press down the drive-brake lever (**1**) for activating the dead man function *(s. fig. 6-5)*.

Danger!
Continuously keep the drive-brake lever (1) pressed during braking, as otherwise a forced brake is released.

2. Pull the drive-brake lever (**1**) to range *brake*.
   The more you pull the drive-brake lever (**1**) to range *brake*, the more the vehicle slows down.
3. Set the drive-brake lever (**1**) to *rest position 0* when the vehicle has stopped.

6.1.3 Hazard Brake

In dangerous situations (e. g. a person or object on the rails) the rapid standstill of the vehicle can save life!

In such a situation *immediately* pull the drive-brake lever (**1**) to range *hazard brake (Gef.-Br.)* for stopping the vehicle as soon as possible *(s. fig. 6-5)*!

6.2 Interrupt Driving

1. Stop the vehicle and set the drive-brake lever (**1**) to *position 0 (s. fig. 6-5)*.
2. Set the parking brake.

Model SGW 201

3. Turn the key in the key-operated switch (**3**) counter-clockwise by 90° to position OFF and take out the key.
4. Turn the selection switch (**2**) for motor groups to *position 0*.

Models SGW 202 to 209 and 211, 214, 215

5. Turn the driving direction selection switch (**2**) to position ✶ or 1.

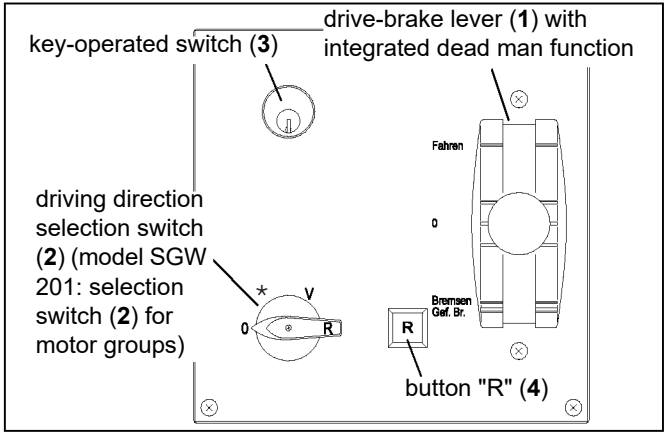

Fig. 6-5: Operating elements of the operating device model SGW

6. Turn the key in the key-operated switch (**3**) counter-clockwise by 90° for locking the driving direction selection switch (**2**) and take out the key.

6.3 Stop Driving

1. Stop the vehicle and set the drive-brake lever (**1**) to *position 0 (s. fig. 6-5)*.
2. Set the parking brake.

Model SGW 201

1. Turn the key in the key-operated switch (**3**) counter-clockwise by 90° to position OFF and take out the key.
2. Turn the selection switch (**2**) for motor groups to position 0.

Models SGW 202 to 211

1. Turn the driving direction selection switch (**2**) to position 0.
2. Turn the key in the key-operated switch (**3**) counter-clockwise by 90° for locking the driving direction selection switch (**2**) and take out the key.

7 Maintenance

Danger!

The operating device for driving and braking model SGW is a safety device. Thus, we recommend you to have the maintenance work done by Vossloh Kiepe GmbH.

If you carry out this work on your own, Vossloh Kiepe GmbH will not accept reliability for unintended performance and resulting damage and danger *(see section 1.1 Intended use)*.

The operating devices for driving and braking SGW must be maintained in a **main check** (every eight years or every 500,000 km). For maintenance purposes, send the operating device to the manufacturer Vossloh Kiepe GmbH *(see company address on back page)*.

8 Repair

Danger!

The operating device for driving and braking model SGW is a safety device. Thus, we recommend you to have the repair work done by Vossloh Kiepe GmbH.

If you carry out this work on your own, Vossloh Kiepe GmbH will not accept reliability for unintended performance and resulting damage and danger *(see sector 1.1 Intended use)*.

Send defective devices to the manufacturer Vossloh Kiepe GmbH for repair *(see company address on back page)*.

Doc. Ident. No.: 94.055 730.191 Edition: 22.03.2006 Mod.-Index: D

Vossloh Kiepe GmbH ● Kiepe-Platz 1 ● D-40599 Düsseldorf
Tel.: +49 (0) 211 74 97 – 0 ● Fax: +49 (0) 211 74 97 – 300
Internet: http://www.vossloh-kiepe.com ● E-Mail: info@vkd.vossloh.com

Copyright reserved – Subject to changes

USB00000086_0520

Este documento es propiedad de CAF, S.A.
La reproducción, transmisión o uso por terceras personas, en cualquier forma o medio, no está permitido sin expresa autorización escrita.

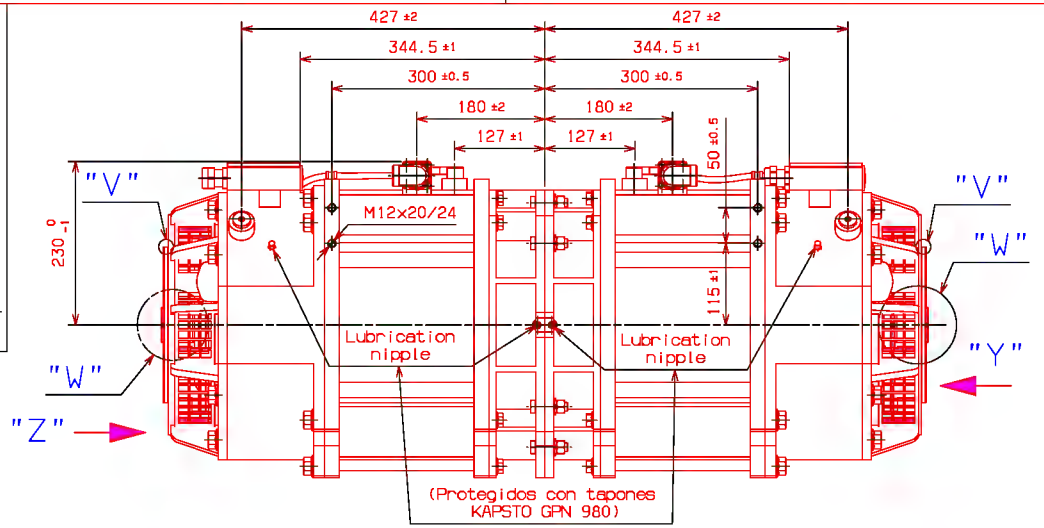

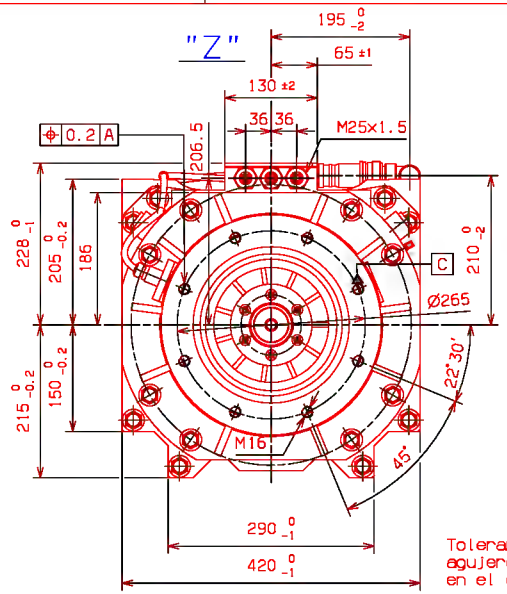

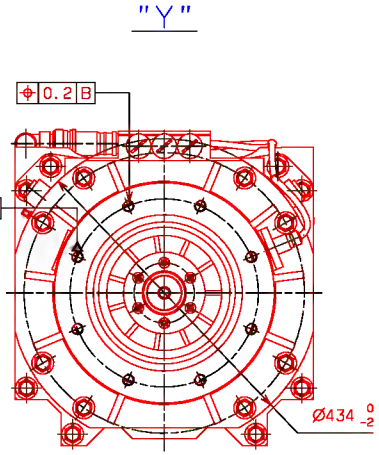

Tolerancia de desplazamiento torsional del agujero referencia C con respecto a su homologo en el extremo opuesto (referencia D) ≤ 1mm.

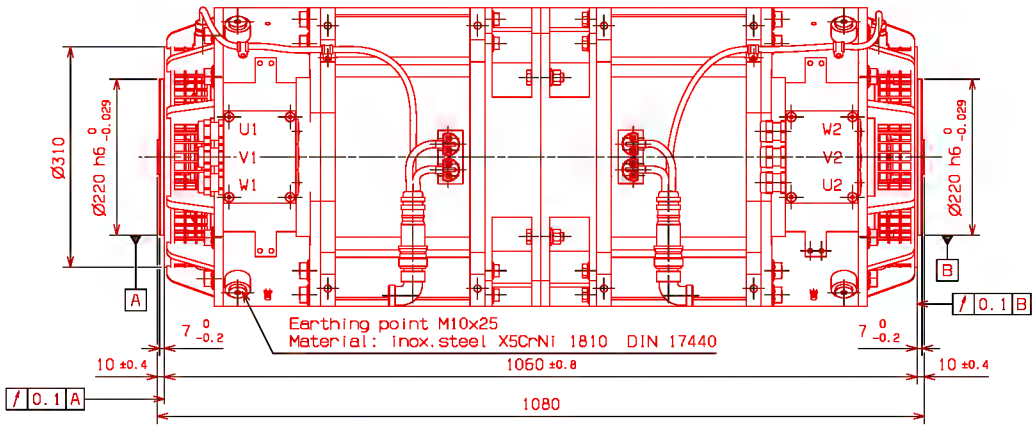

ISOMETRICA (1/10)

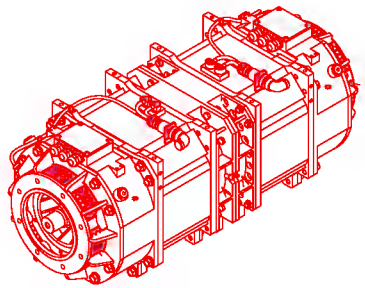

"W" (1/1)

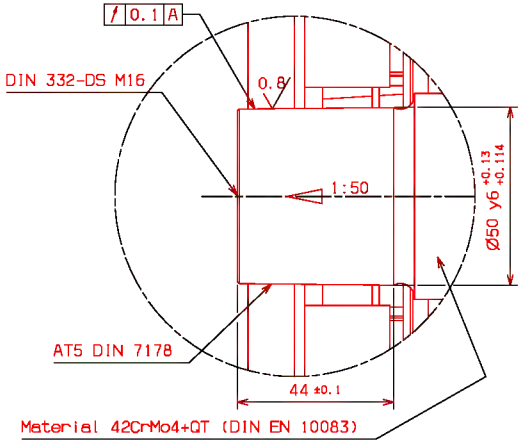

"V" (5/1)

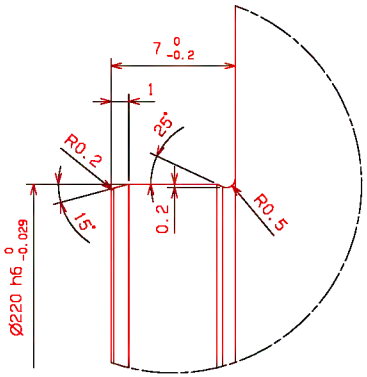

MARCA	DESCRIPCION	CANT.	CODIFICACION O NORMA / N° DIBUJO O CALIDAD MATERIAL:	MATERIAL	PESO UNITARIO / NOTAS Y OBSERVACIONES	MAX. DIMENS.
00	MOTOR DE TRACCION	1				

MODIFICACIONES

	FECHA	NOMBRES
COMPR.		
VERIFIC.		
HOMOL.		

PLANO N°:

SUSTITUYE A:

DESIGNACION:

MOTOR DE TRACCION

TOL. GEN.	ESCALA
NF F 00-037	1/5

EDICION

HOJA N° 1

N° HOJAS 1

	FECHA	NOMBRES
DIBUJ.	26-04-04	
VERIFIC.	26-04-04	-

ENTIDAD: CAF

REFERENCIA:

SUSTITUYE A:

EDICION

USB00000086_0521

Esta documento es propiedad de CAF, S.A.
La reproducción, transmisión o uso por terceras personas, de este documento o su contenido, no está permitido sin expresa autorización escrita.

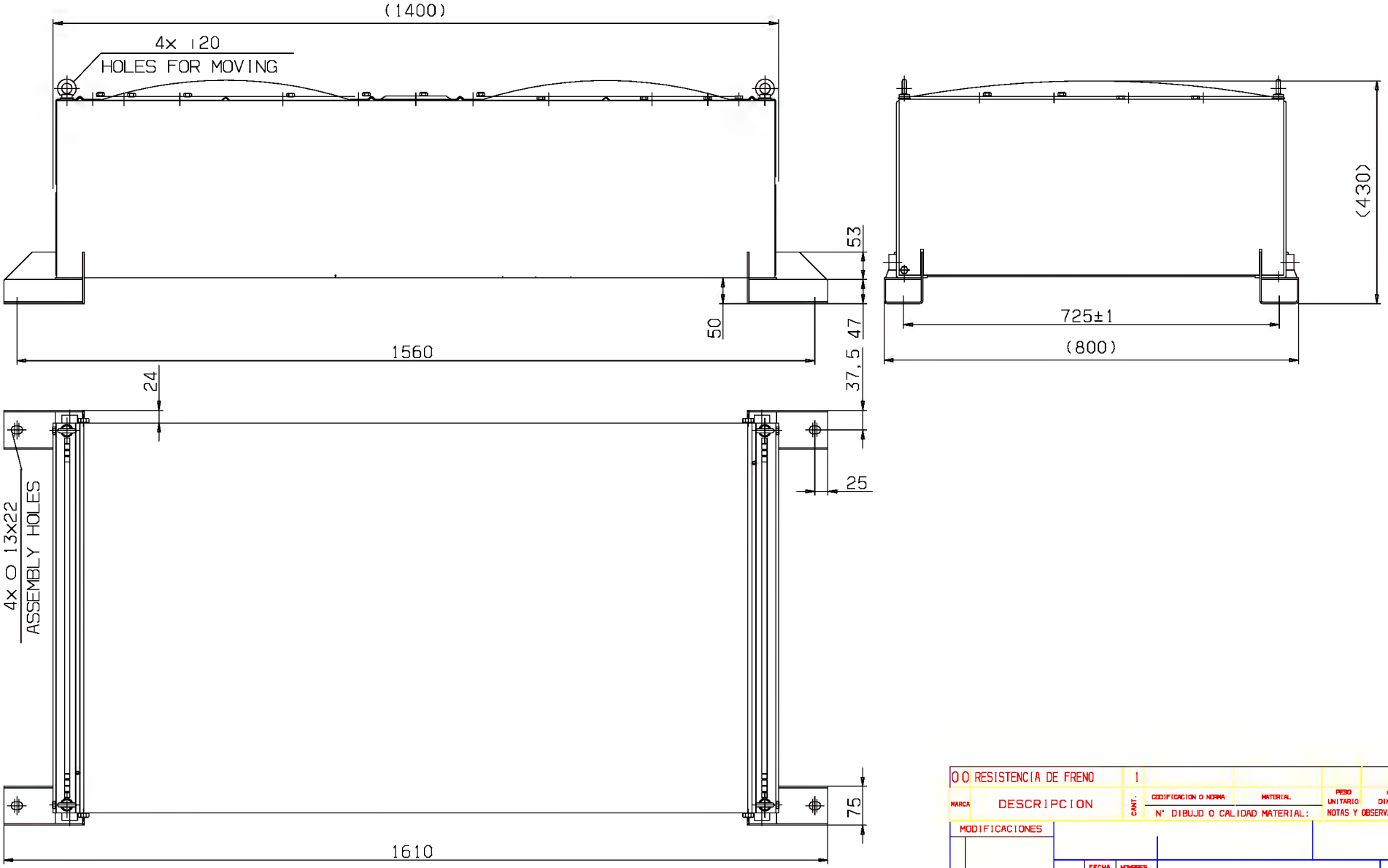

00	RESISTENCIA DE FRENO	1				
MARCA	DESCRIPCION	CANT.	CODIFICACION O NORMA	MATERIAL	PESO UNITARIO	MM. DIMENS.
			N° DIBUJO O CALIDAD MATERIAL:		NOTAS Y OBSERVACIONES	

MODIFICACIONES

	FECHA	NOMBRES
COMPR.		
VERIFIC.		
HOMOL.		

PLANO N°:

SUSTITUYE A:

DESIGNACION:

RESISTENCIA DE FRENO

TOL. GEN.	ESCALA
NF F 00-037	1/5

EDICION

HOJA N° -

N° HOJAS

	FECHA	NOMBRES
DIBUJ.	18-12-03	
VERIFIC.	18-12-03	

ENTIDAD: CAF

REFERENCIA:

SUSTITUYE A:

EDICION

USB00000086_0522

Tram Edinburgh

Technical Description “Propulsion System”

Edition: 00

	Created:	*Revised:*	*Checked:*	*Released:*
Date:	2006-09-13		2006-09-22	2006-09-22
Signature/ Name:	Dirnbacher Helmut		Kainz Reinhard	Dirnbacher Helmut

USB00000086_0523

Update service, revision control:

Section:	Issue:	Description:
	00	First Edition

Copyright:

This description is the intellectual property of ELIN EBG Traction GmbH.
The reproduction, transmission or use of this document or its contents is not permitted without express written authority. Offenders will be liable for damages.
All rights created by patent grant or registration of a utility model or design are reserved.

Contents: **Page**

1 Introduction 4

2 Description of Propulsion System 4

2.1 General 4

2.2 Electrical Traction System 5

2.3 Traction Control System 7

3 Description of System Components 9

3.1 Traction Inverter ETRIS T1000/DWRG 9

3.1.1 General 9
3.1.2 Functional description 9
3.1.3 Technical data 15
3.1.4 Electronic I/O Interfaces: 16
3.1.5 Dimensions 18

3.2 Brake resistor 19

3.2.1 General 19
3.2.2 Technical data 19
3.2.3 Dimensions 20

3.3 Traction Motor 21

3.3.1 General 21
3.3.2 Technical data 21
3.3.3 Dimensions 22
3.3.4 Motor Speed Sensors 23

3.4 High Speed Circuit Breaker 25

3.4.1 General 25
3.4.2 Technical data 25
3.4.3 Characteristics 26
3.4.4 Dimensions 27

3.5 Master Controller 28

3.5.1 General 28
3.5.2 Technical data 28
3.5.3 Drawings 29

1 Introduction

This Technical Description gives an overview to the configuration of the traction system and the components used within the system.

The ELIN EBG Traction propulsion system is a modern traction equipment with state of the art components.

The ELIN Traction Inverter System (ETRIS) and it's integrated ELIN Traction Control System (ELTAS ECON) are designed specifically to achieve the highest performance in rail vehicles, urban transport- and special vehicles.
Standardised concepts, using track proven components and allowing a number of variations, ensures high reliability and safety due to proven design simultaneously fitting optimised for individual requirements. The compact and modular design makes the unit ideal for use in modern urban transport vehicles.

2 Description of Propulsion System

2.1 General

Due to its clear advantages, modern electrical vehicles are exclusively equipped with three phase alternating current traction technology. The power supply system in urban transport is usually a DC voltage system. For variable speed drives, a three-phase alternating current, with variable frequency and variable voltage, is needed. For this reason, powerful inverter and control systems are used to convert the DC voltage into a three-phase alternating voltage supplying the traction motors.

The propulsion system consists of all necessary equipment to condition the power supply from the catenary system into a fully useable power supply to drive the traction motors under fully controlled conditions with respect to speed, acceleration and deceleration by regenerative or rheostatic braking.

Traction motors are fed by traction inverters based on IGBT-technology. Traction motors as well as traction inverters are air cooled.

2.2 Electrical Traction System

The propulsion system of ELIN EBG Traction consists of the following main components:

- High speed circuit breaker
- Traction Inverter (ETRIS T1000 DWRG 750/2x800-LD 750V)
- Brake resistor
- Traction motor including speed sensor
- Master controller

The description is based on the scheme given below.

The vehicle consists of three motor bogies and one trailer bogie. Each motor bogie is equipped with an independent, microprocessor controlled propulsion system.
The propulsion system of each motor bogie consists of one traction inverter which powers the two double traction motors and one brake resistor. The three traction inverters are directly linked via a CAN-Databus.

A voltage surge arrester close to the pantograph protects electrical equipment on the tram from overvoltages due to switching activities or lightning strokes.

Following to the pantograph a high speed circuit breaker is arranged. The high speed circuit breaker is a heavy duty, transit proven type. It disconnects the propulsion systems in case of a short circuit and prevents cables and traction inverters from damage caused by operation above the name plate ratings. The breaker is equipped with electromagnetic as well as thermal release.

After the high speed circuit breaker (HSCB) the main circuit is divided into parallel branches for each propulsion system. Neither the auxiliary inverter nor the air condition system is fed via the HSCB.

The traction inverter system is based on IGBT-technology and air cooled. It converts the DC voltage from the catenary line into a three-phase AC voltage. This three-phase AC voltage is used to feed the traction motors.

The traction inverter also contains the line choke, the charging unit and main contactor. The line choke decreases electromagnetic interference to an admissible limit. The charging unit reduces the inrush current during power-on of the traction inverter system and the main contactor is used to disconnect the inverter during urgency braking, emergency braking and to gear down the propulsion system.

The motors are three phase asynchronous motors with a short circuit rotor and air cooling. They are self ventilated and of an enclosed design. That means that there are two independent air circuits – an inner and an outer circuit. Both air circuits are maintained by its own axle mounted fan. This design avoids pollution of the windings, increases the reliability of the motors and reduces maintenance requirements. They are self ventilated by means of an axle-fastened fan that takes air through an air input grate and cools the surface of the motor. They are mounted lateral of the vehicle and power the wheels via the gears and couplings.

The brake resistors are designed to dissipate the complete electrical braking energy when recuperation is not possible. They are roof-mounted and cooled by natural convection supplemented by the airflow caused by vehicle speed.

Main Circuit of Propulsion System (Scheme)

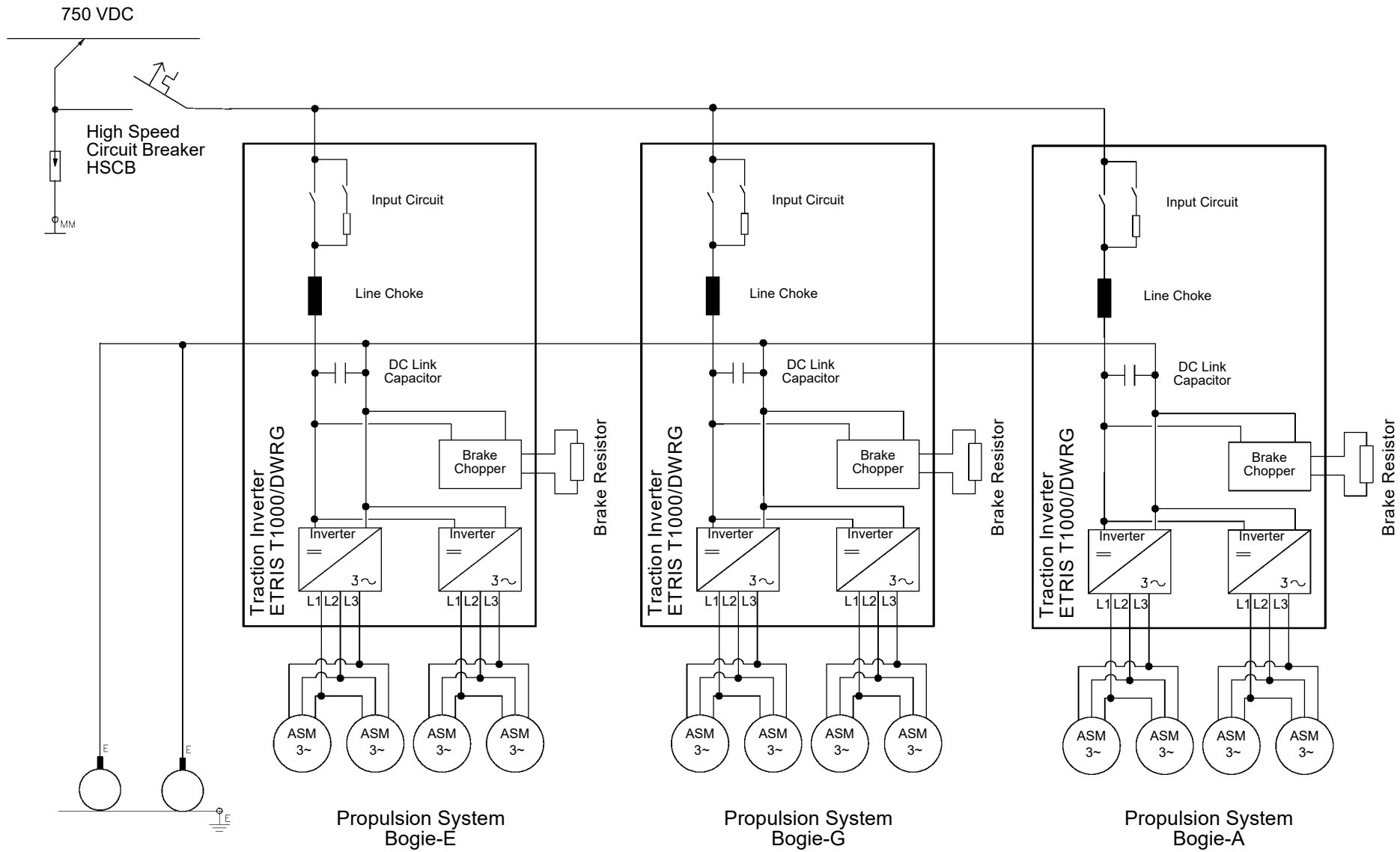

2.3 Traction Control System

In this project the Traction Control Unit (ECON) is integrated in the traction inverter which powers the four motors of one motor bogie. All three traction inverters utilised in the train are configured identically.

The communication between the three traction inverters (Bus-Slaves) with the higher ranking Vehicle Control Unit VCU and the Brake Control Units BCU (both are not scope of Elin) is performed via a RS485 - Databus (see scheme given below).

Additionally, for a degraded mode, in case of failure of the bus system, the traction inverters are supported with necessary information (e.g. driving direction, traction, brake, coast) from the trainlines via digital In- and Outputs.

Beside providing the databus interface and processing the Inputs / Outputs, the ECONs of the traction inverters also generate the optimised pulse pattern for the IGBT semiconductor and perform some basic control functions. The control of the IGBT semiconductor is done via potential free signals, which ensures a safe isolation between the inverter's interfaces (inputs, outputs, databus) and the internal power electronic.

Every motor is eqipped with one speed sensor and one PT100 temperature sensor. The signals are processed by the traction inverters to assure an optimal control and monitoring of the motors.

The traction and braking demand provided by the master controller is transferred to the three ECONs and to the BCU as a PWM signal.

Traction Control System (scheme)

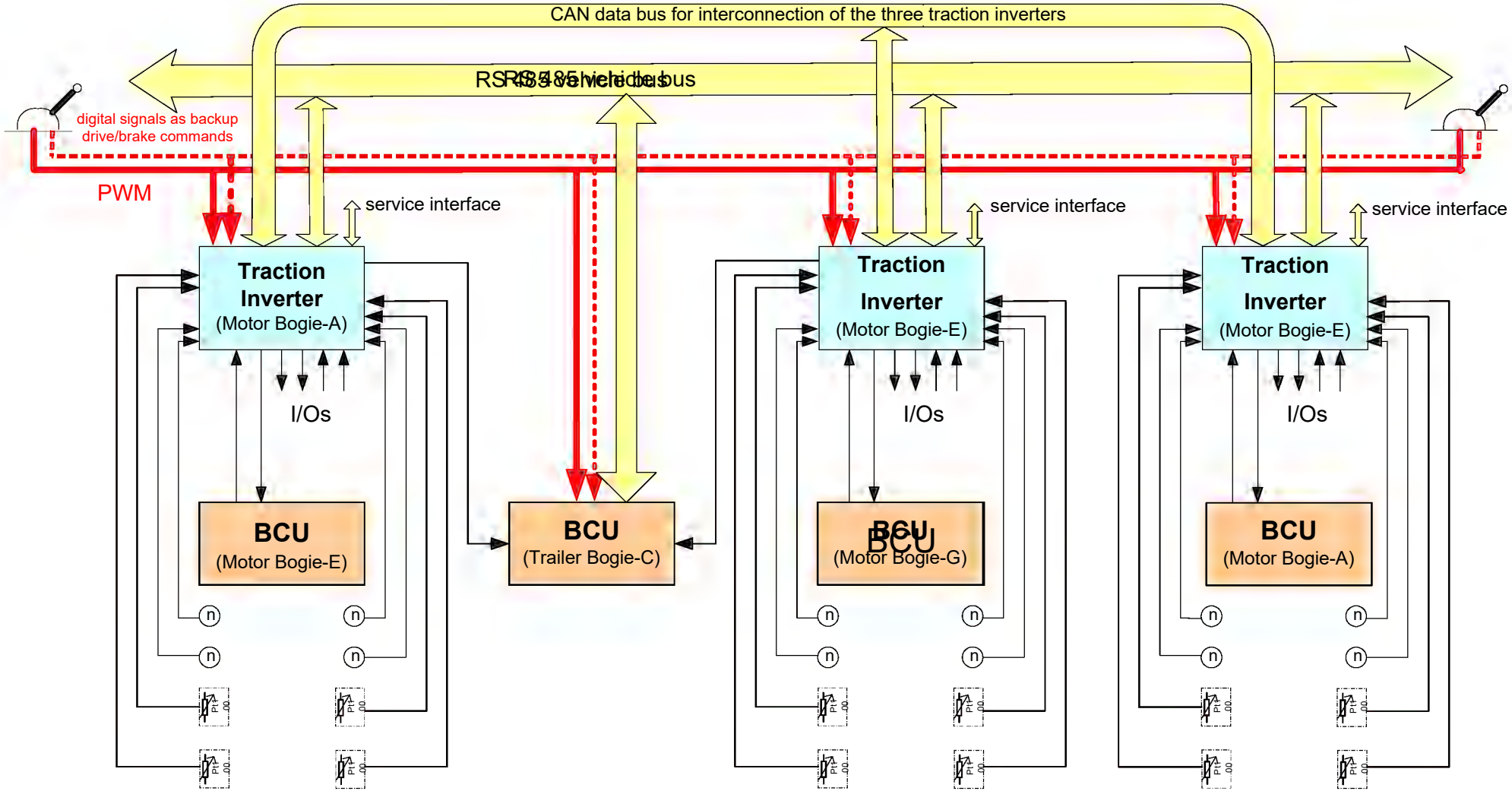

3 Description of System Components

3.1 Traction Inverter ETRIS T1000/DWRG

3.1.1 General

The ETRIS T1000 (ETRIS = **E**LIN **T**raction **I**nverter **S**ystem) represents a compact and modular system which is composed of the newest technology and therefore offers ideal conditions for the traction equipment and vehicle. The inverter and the brake chopper are carried out in IGBT technology. The two branches of the inverter output (each feeding two motors) are controlled independently by one common Traction Control Unit.
The cooling of the Traction Inverter is realised by means of forced ventilation.

3.1.2 Functional description

During operation, the ETRIS T1000 DWRG converts the supply DC voltage into pulse modulated three-phase alternating voltage to drive the asynchronous motors. During electrical braking energy is fed back into the supply network or is dissipated by utilising the brake resistors, if the network cannot absorb all or only a part of the braking energy.

The control of output voltage and output frequency works on the principle of the pulse width modulated voltage inverter. The high switching frequency of the IGBT-modules with an optimised modulation of the pulses minimises noise emissions and improves the overall efficiency of the propulsion system.

The ETRIS T1000 is provided with over-temperature protection, which initiates a reduced level of performance from the affected unit. Upon temperatures returning to normal, the performance automatically resets to normal level. The over-temperature is announced to the vehicle control system.

A temperature protection of the brake resistors is realised utilising existing sub-components. Measuring the brake resistor's current at actual voltage results in a resistance value. An evaluation of these values based on the temperature coefficient of the brake resistors gives the necessary temperature information for protection.

All internal components of the ETRIS T1000 are designed to minimise electromagnetic emission within the inverter. The combination of the choice of a suitable case as well as the correct cabling on the vehicle avoids the radiation of electromagnetic fields to its greatest possible extent. The electromagnetic compatibility of components delivered by ELIN EBG Traction complies with relevant standards.

Functional diagram ETRIS T1000 DWRG

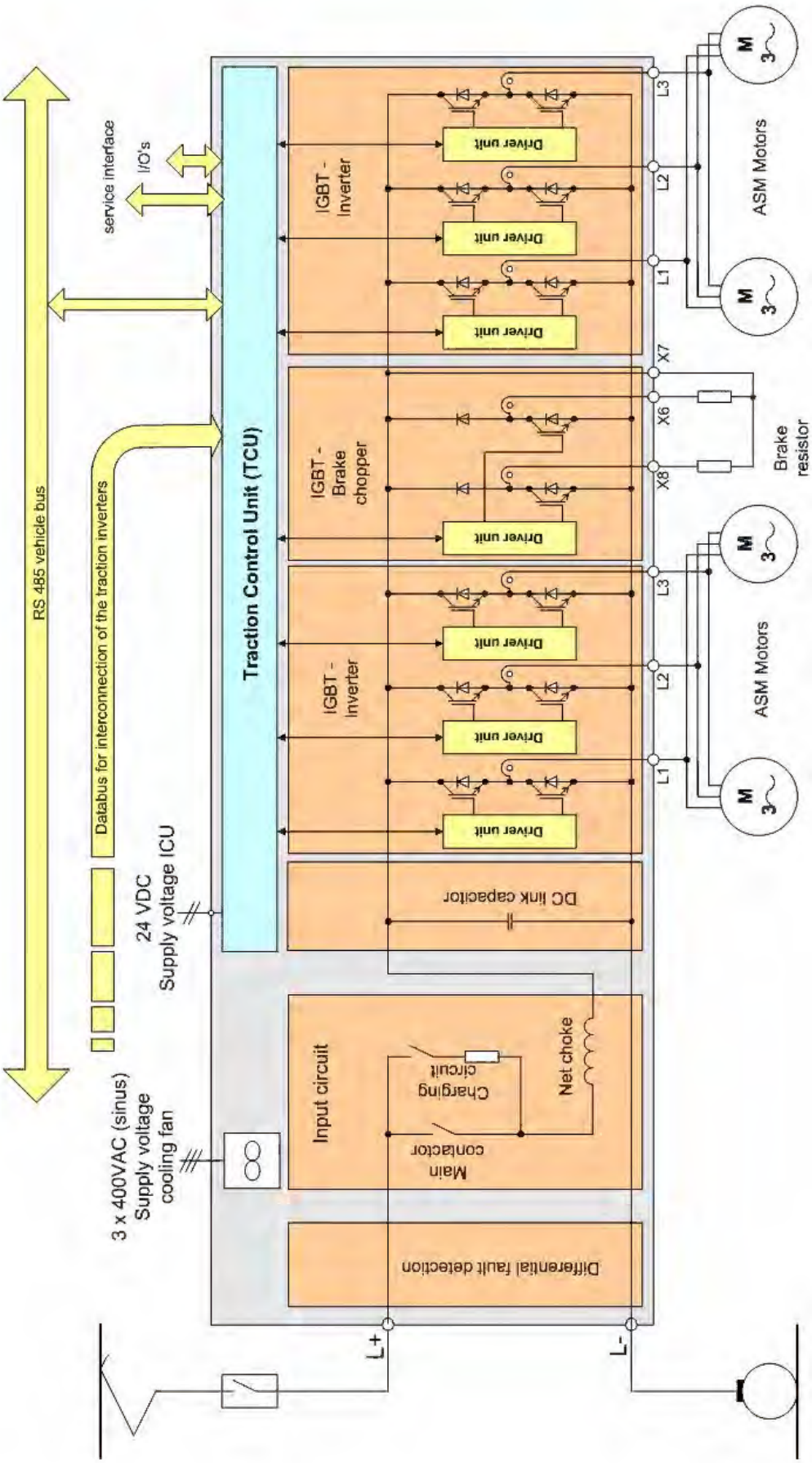

For a functional description the ETRIS T1000 DWRG can be configured into following main devices.

3.1.2.1 Input circuit

The input circuit consists of the main contactor and the loading circuit. When the vehicle is geared up, the loading circuit is switched on and the DC link capacitor is charged to line voltage by means of a charging resistor (limits inrush current). The main contactor performes a direct connection of the capacitor to the supply voltage and disconnects the converter from the line in case of emergency stop or when turned off. The main contactor is constantly monitored by the ECON.
For safe relevant shut-off the main contactor is linked hard wired to the emergency train-line and switched off directly if this signal becomes low.

3.1.2.2 DC link capacitor

The DC link capacitor stabilises the input voltage on the inverter. The capacitor and the line choke work as a LC input filter that keeps the harmonics of the supply current low and that limits the supply current when supply voltage disturbances occur.
For safety reasons, in parallel connection to the capacitor a fixed discharging device is arranged, which discharges the capacitor after separating from the supply voltage, also in case of failure of the brake choppers, which discharge the capacitor during normal shut-off via the brake resistors.

3.1.2.3 IGBT inverter

The inverter consists of IGBT-modules with anti-parallel free-wheeling diodes and associated Gate Drive Control units (GDC). It transforms the DC input circuit into three-phase AC current by means of pulse modulated triggering of the IGBTs. Therefore the traction unit is particularly efficient and has improved dynamics control behaviour. The efficiency in traction and braking is also optimised to a maximum.

3.1.2.4 IGBT brake chopper

The brake chopper consists of an IGBT-chopper module with an associated Gate Drive Control unit (GDC). The chopper module connects the DC-link capacitor with an external brake resistor.

Task of the brake chopper is to discharge energy to the brake resistors:

- if the network can absorb only a part or none of the generated braking energy, it is absorbed by the brake resistors
- active protection of the converter from over-voltage; when an upper limit is exceeded, the brake chopper is automatically activated
- active absorption of the LC input filter during network interference
- discharging of the input capacitor by means of the brake resistors when the converter is geared down.

3.1.2.5 Gate Drive Control units (GDC)

The GDC enables a separated triggering of the IGBT-modules. They receive the commands from the Traction Control Unit and return failure and switching signals. Furthermore current, temperature and voltage signals are levelled and transmitted via the GDC to the Traction Control Unit. The trigger

impulses are defined by the Traction Control Unit, which evaluates in real time the ideal pulse pattern from the nominal set values and measured values.

3.1.2.6 Current sensors

For control and protective measures the currents of power outputs i.e. motor and brake resistor are measured and transmitted to the Gate Drive Control units (GDC).

3.1.2.7 Differential fault current detection

The input of the propulsion inverter incorporates a differential fault current detection to protect from current levels which are excessive (> 30A), but below the triggering of over current protection devices.
The two supply lines (+ 750VDC and GND) of the inverter pass a current sensor which measures the current difference. The signal of the sensor is proportional to the difference of the supply current. The signal is processed by the Traction Control Unit ECON.
Upon detection of a ground fault, the high speed circuit breaker will be released. A failure message can be transfered via the Vehicle Databus to a Vehicle Control Unit and / or Monitoring System.

3.1.2.8 Cooling system

The traction inverter is cooled by a radial fan. Fresh air is drawn through the heat sink bars, on which the IGBT semiconductors are placed and blown out through the line filter (line choke) on the opposite side of the inverter. The air circulation is completely separated by seals from the inverter's electronic, only the heat sink bars are exposed to the air flow. The air temperature at the air outlet may have 80°C under most unfavourable circumstances.
The radial fan has to be supplied from 3x400 V AC (sinus) vehicle supply system and turns over a volume of max.1400m³/h of air.

3.1.2.9 Traction Control Unit (ECON)

The Traction Control Unit (ECON) performs at one hand the communication to other equipment via bus and train lines and on the other hand the control of the IGBT modules.
It processes drive related tasks like spin/slide control, torque determination and analysis of speed signals. This is achieved by analysing and comparison of the demanded driving signals received by the master controller, the speed signal from the traction motors and other signals with the current possible traction forces concerning overhead voltage, speed, wheel slip and thermal state of the traction components.
Furthermore the ECON performs the field oriented control of the asynchronous machine, generates the corresponding pulse pattern and passes the set values on to the Gate Drive Control unit (GDC) of the IGBT modules.

The Traction Control Unit handles the following tasks:

- control of the traction inverter
- communication via CAN-Bus to the second traction inverter
- communication to the VCU via RS 485
- receives the torque set values from the master controller (PWM input)
- provides digital inputs and outputs, e. g. control of brakes etc.
- provides analogue inputs for temperature signals of the traction motors
- provides digital inputs for the speed sensor signal
- control of IGBT pulse inverter and brake chopper
- gives the set values for the IGBT elements
- collects measurement and diagnose values
- rapid protective measures in case of malfunction (e.g. over- and under-voltage, over-current, over-temperature etc.)
- ensures safe separation of the auxiliary voltage and the 750 Vdc input
- controls the loading circuit line filter and main contactor
- wheel spin/slide control

3.1.2.10 Wheel Spin/Slide Control

The traction systems are equipped with a wheel spin/slide detection system to eliminate damage and unnecessary wear to wheel treads. This system maximises the utilisation of available wheel/rail adhesion under low adhesion conditions. Spin/slide is detected on a per wheel basis, and due to the system configuration independently controlled for each bogie side.

Wheel spin and wheel slide conditions are detected with highest efficiency mainly based on two different criteria:

- Evaluating the speed of each wheel: A spin/slide condition is detected if the change of a wheel speed exceeds values applicable to the current acceleration/deceleration during driving and braking. Tolerances in detecting are implemented for gradients depending on track alignment data which cannot be taken into consideration but influencing acceleration and deceleration values.
- Comparing speeds of different wheels and subsequent correcting these conditions the efficiency of the spin/slide control is increased to the possible maximum. The speed signal of the bogie wheels shall be submitted from the BCU via the RS485 vehicle bus with sufficient short refreshing rate.

In the event of detecting wheel spin/slide a reduction of traction respectively braking demand is initiated in order to adjust the effort according to the available adhesion. This reduction is calculated taking into consideration acceleration / deceleration respectively including differences to reference wheel speeds and takes place for a short period until wheel speed approaches respective train speed. Subsequently traction / braking effort is readjusted by increasing to values for optimised utilisation of available adhesion providing highest efficiency and avoiding repeating spin/slide conditions.

High dynamic detection and correction of spin/slide conditions provide lowest spin/slide resulting in the advantage of minimised wheel wear and highest utilisation of traction / electrical braking effort.

For the necessary speed evaluation each traction motor is equipped with a speed sensor, measuring the motor speed at a tooth-wheel. By means of a special evaluation method– the ratiometric counting – low speeds can also be optimally processed by the RPM logging and evaluation board installed in the Traction Control Units. Monitoring features are incorporated to the system to detect malfunction of speed sensors which are also logged in the fault memory.

3.1.2.11 Software

The application program is designed on a standard PC (or Laptop) with the help of a graphical function plan language based on a „Windows" surface. Pre-programmed functions can be picked as modules from a menu. Control functions as well as complex regulation tasks can thus be obtained by linking these pre-defined functional blocks. As soon as programming is finished, it is translated and it can be transferred to the Traction Control Unit.

A name can be given to every input- or output-signal of the functional plan. These signals can be scanned online during operation. To visualise them, a PC (or Laptop) is connected to the service interface. To represent the signals clearly, calculation factors are used which enable to monitor values of parameters in real units like e.g. km/h, Ampere, Volt.

3.1.2.12 Diagnostics

A Laptop can be connected via an Ethernet service interface to the Traction Control Unit, to allow a detailed monitoring and diagnosis of these parameters or to download the fault memory containing fault data, operating and ambient parameters for further detailed analysis. Special software provides multiple possibilities such as the filtering of errors, representation of particular operational situations, time limits etc. by utilising individual configured masks and therefore quick and easy diagnostic of a failure. Utilising the capabilities of the system provides detailed information and enables efficient diagnostics and identification of replaceable components and sub-components for maintenance-personnel.

The utilised Traction Control Unit (ECON) has many detection, memory and evaluation functions. Whenever a fault occurs in the propulsion system, it is registered in a non-volatile fault memory in real time and together with digital and analogue ambient data and operating parameters. Relevant data are monitored via the vehicle control and monitoring system to the driver.

3.1.2.13 Communication interfaces

Communication with the VCU is performed via a RS 485 interface. Parameters are not defined in detail yet.
Data that should be exchanged between ECON and VCU will be defined during the project.

For download of the fault history the ECON provides an extra interface. Since in the fault history a big amount of data is registered, the interface will be the Ethernet service interface. Ethernet interfaces are almost a standard feature of Laptops.

The traction inverters will be interconnected via an independent CAN bus system in order to optimize their function.

3.1.3 Technical data

Inverter data:	nominal input voltage	=	750 VDC
	min. service voltage	=	500 VDC
	max. service voltage	=	937 VDC
	2 x three-phase output voltage	=	3 x 0 ... 565 V (input voltage 750 V)
	nominal output current	=	2 x 200 Aeff
	max. output current	=	2 x 350 Aeff
	output frequency	=	0 .. 200 Hz
	switching frequency	=	1500 Hz
	nominal power	=	385 kVA (equal to 385 kW at cosφ = 1)
IGBT Modules:	max. collector-emitter voltage	=	1700 V
	max. DC-collector current (Tc=80°C)	=	800 A
	Manufacturer	=	EUPEC, Mitsubishi
Auxiliary voltage:	Traction Control Units, contactors	=	24 VDC (+25%; -30%)
	supply voltage for cooling fan	=	400 VAC (50Hz sinus) (to be supplied externally)
Dimensions:	width x length x height	=	1620 x 1160 x 453,5 mm
	weight	=	appr. 390 kg

Power Interfaces

24VDC inverter supply:	24 VDC (16,8…31,2 VDC) Supply voltage (5,5A@16,8V)	
Main contactor supply	24 VDC (16,8…31,2 VDC, 5 A at 31,2V continously)	
Fan supply:	supply voltage cooling fan, 3 x 400 VAC (appr. 1,5 A)	
Brake resistor:	2 x 1,55 Ohm, brake resistor (two resistor branches in one housing)	
Power output:	1U, 1V, 1W	3 x 0…565 VAC output voltage for traction motors
Power input:	L+, L-	750 V DC input voltage

Line Filter Characteristics

Inductance of line choke:	2,15 mH
Capacity of filter capacitor:	6 mF
Impedance at 50 Hz:	0,14 Ω

3.1.4 Electronic I/O Interfaces:

Each traction inverter is equipped with following Interfaces:

Input Signals:

- 32 x Digital Input

  The ECON logs digital switching status of 32 Inputs (E0…E31) with a nominal voltage of 24VDC. When switching the input, an inrush current of appr. 20mA occurs during a periode of 10ms which cleans the contacts from oxid layer of the extern switching element, thus ensures a low resistance of the contact.

Max. static input voltage:	31,2 V
Input level: High:	≥12 V
Low:	<7 V
Input Current:	2 mA (at 24 VDC)
Input Inrush Current:	20 mA for 10ms (at 24 VDC) in order to keep mechanical contacts of exernal relais clean

- 2 x Analogue Input

  The ECON provides 2 ground isolated analoge inputs, which can be selectively used as current or voltage input.

  Voltage input:
  Nominal input voltage: ±10 VDC

  Current input:
  Nominal input current: ±20 mA

- 4 x Analogue Input PT100

  The ECON is equipped with 4 ground isolated analogue inputs for PT100 sensors.

  PT100 analogue input data:
  Temperature range: -50….250°C

- 5 x Speed sensor Input

  A maximum of 5 speed sensor channels can receive selectively the A/B signals or the frequency/direction signals from the speed sensors. The speed detector inputs are separated from the electronic parts by means of an opto-coupler.

Input level: High:	> 10 V (nominal 15 V)
Low:	< 3,5 V
Input Current:	15 mA (at 30 VDC)

- 1 x signal: Traction Enable **TE** (opto coupler 24 VDC)

  The triggering of the IGBT-modules is blocked, if this input is "low". In this state the traction inverter do not power the motors. Neither tractive force, nor electrodynamic braking can be applied.

Max. static input voltage:	31,2 V
Input level: High:	≥12 V
Low:	<7 V
Input Current:	2 mA (at 24 VDC)
Input Inrush Current:	20 mA for 10ms (at 24 VDC) in order to keep mechanical contacts of exernal relais clean

- 1 x PWM Input

Input Frequency:	100 Hz….1000 Hz
Input level: High:	> 12 V (nominal 15 V)
Low:	< 7 V
Input Current:	<4 mA

- 1 x Main Contactor Supply **MCS** (max. input current 4,2 A at 30V)

  This input supplies the coils of main contactor and charging contactor. When this input is energized, main and charging contactors can be activated, depending on internal inverter logic. When connector is de-energized, neither main contactor nor charging contactor can be activated.

Output Signals:

- 16 x Digital Output DO

  The ECON contains 16 digital outputs (A0..A15) for switching actors, light indicator etc. with an operating voltage of 24 VDC.

Permanent output current:	1 mA … 1,2 A
Output High level:	>16,3 V

- 1 x Main Contactor Open **MCO**

  This is a potential free auxiliary contact (normally closed) of the main contactor, in order to avoid switching on the main circuit breaker when main contactor is energized.

3.1.5 Dimensions

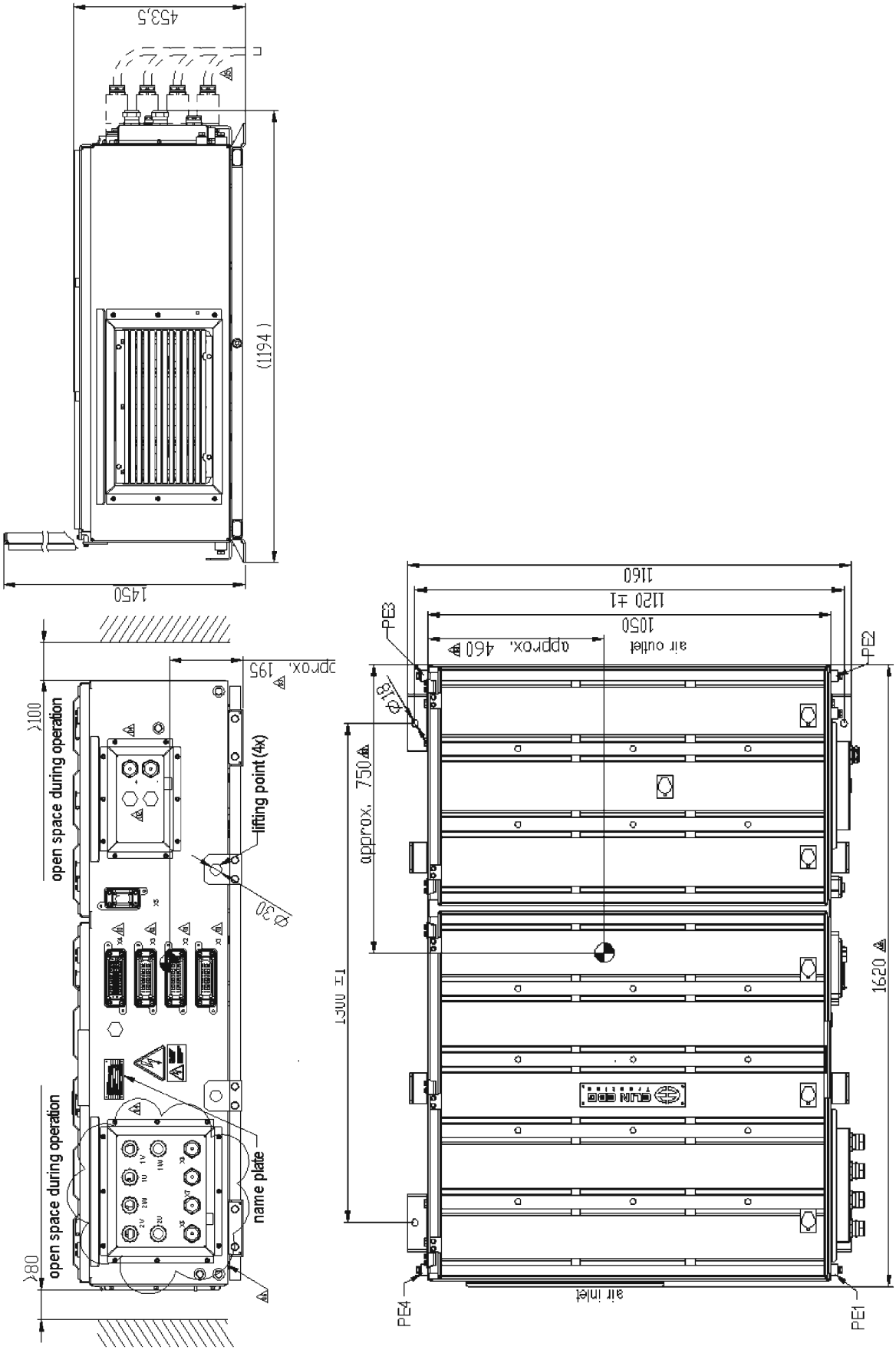

3.2 Brake resistor

3.2.1 General

The brake resistors are roof-mounted and cooled by natural convection supplemented by the airflow caused by vehicle speed. Three double brake resistors (each 2 x 1,55 Ohm) are installed per vehicle. They are designed to dissipate the complete electrical braking energy when recuperation is not possible.

The brake resistors are pulsed with 1500 Hz, the respective triggering is controlled by the Traction Control Unit.

ETRIS T1000 prevents exceeding of temperature limit by measurement of brake resistor current and calculation of ohmic resistance, which directly shows the temperature of the resistor grid. This is enabled by using a resistor material with a suitable temperature coefficient. The allocated material is NICROFER or equivalent.

Adequate shielding is provided to protect surrounding equipment from excessive heat dissipation; the resistor grid is suspended by a gliding fixation to handle the occurring dilatations as a result of the heat exposure.

3.2.2 Technical data

Preliminary data per double brake resistor:

ohmic resistance nominal:	2 x 1,55 Ohm, -7% / +5% (two resistors in one housing)
max. inductivity:	< 12 µH
max. power to dissipate:	2 x 240 kW
rated power to dissipate:	2 x 52 kW
Dimensions (l x w x h):	1610 x 800 x 430 mm
Weight:	130 kg, +/-10%

3.2.3 Dimensions

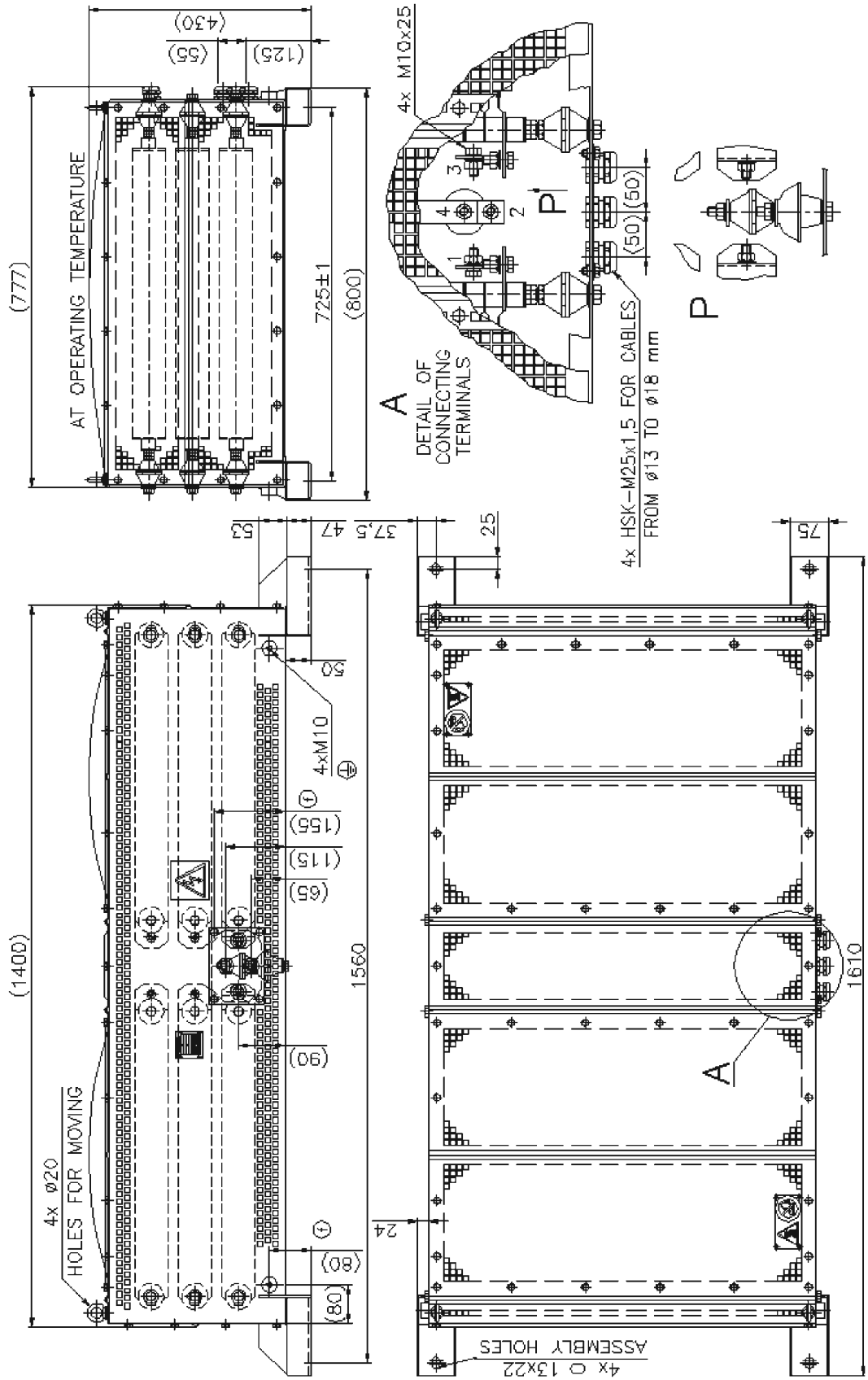

3.3 Traction Motor

3.3.1 General

The motors are 3-phase asynchronous machines in a self-ventilating, enclosed design. They are of a squirrel cage type. Two motors at a time are rigidly mounted to each other at the non-driven end. Two motors and two gear boxex together form a drive unit. Two drive units are mounted via the gear boxes resilient to a motor bogie.

Because of highest reliability self-ventilated, enclosed traction motors have been chosen. The cooling system for each motor consists of an inner and an outer air circuit. Each air circuit is maintained by it's own fan. The two air circuits are strictly divided. The inner circuit cools the winding overheads and the stator winding. The outer fan brings fresh air, sucked in through the air inlet, through holes in the stator iron core. The air inlet contains a grid.The maintenance of the traction motor is limited to greasing of bearings, removing waste grease at wide regular intervals and periodically cleaning of air ducts and filter systems.

Both static and dynamic balancing of the rotor with high accuracy minimizes the generating of vibrations. The traction motor is dust-protected and protected against ingress of splashing water. The utilized materials and protection paintings ensure resistance to environmental influences like salty and corrosive atmosphere.

For thermal protection the motors are equipped with PT100 temperature sensors. Subsequent to the evaluating of the PT100 signals in each motor the temperature information is read into the Traction Control Unit for further processing and temperature protection of the motors.
Transit proven speed sensors, measuring the motor speed at a tooth-wheel, integrated to the fan, are installed at each traction motor in an easy accessible position. By means of a special evaluation method – the ratiometric counting – low speeds can also be optimally processed by the Traction Control Units.

3.3.2 Technical data

Motor type	2 x TMR36-19-4
Nominal power	61 kW (132 kW per double motor)
Nominal voltage	425 V
Nominal current	109 A (per single motor)
Nominal speed	1538 rpm
Maximal speed	3968 rpm
Nominal frequency	52 Hz
Nominal torque	~ 378 Nm (per single motor)
Number of poles	4 (2 pairs)
Efficiency	93 %
Cos phi	0,82
Type of protection:	IP54
Weight:	625 kg per double motor
Lubrication:	grease lubrication
Isolation class	H (180K)
Winding type	round wire winding
Speed sensor	tooth wheel for sensor integrated
Bearing overhaul:	1 Mio km or maximum 8 years
Bearing lubrication interval:	150.000 km

3.3.3 Dimensions

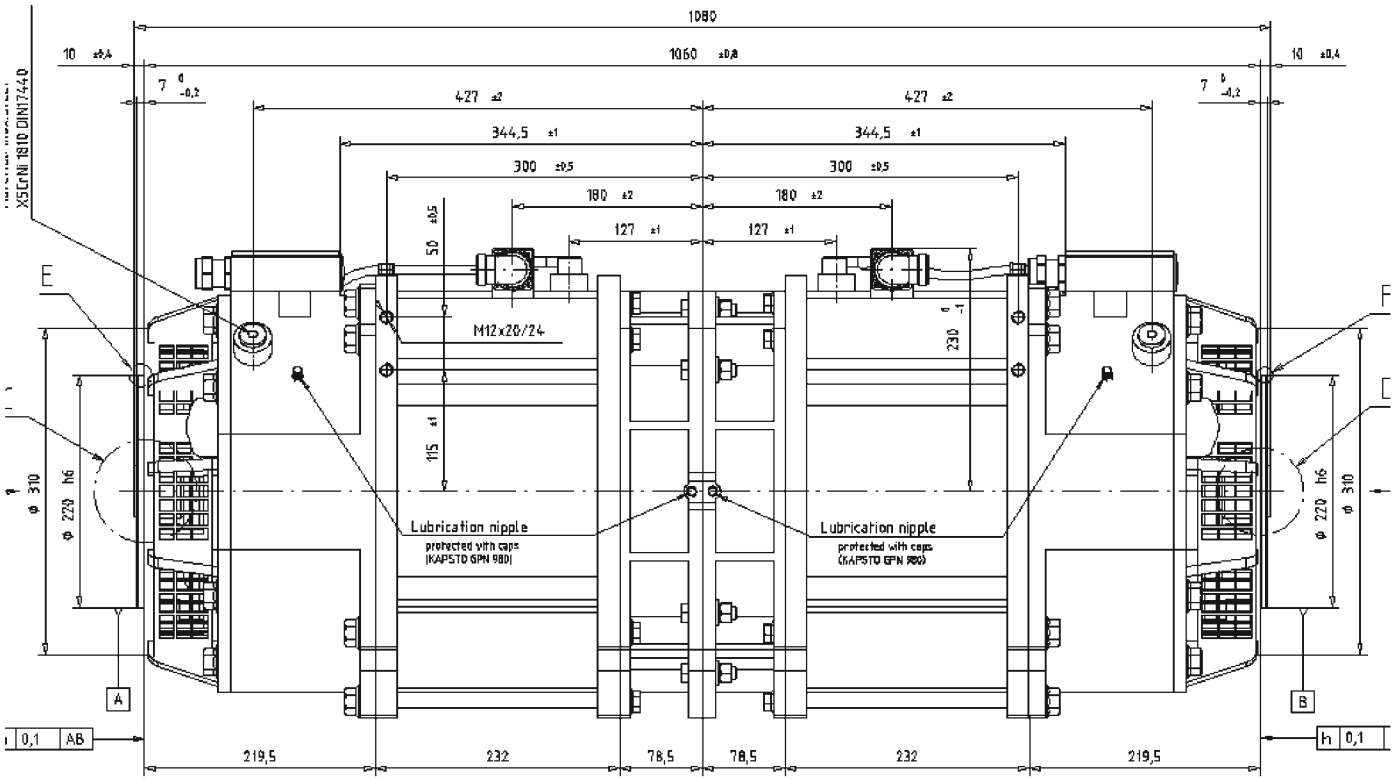

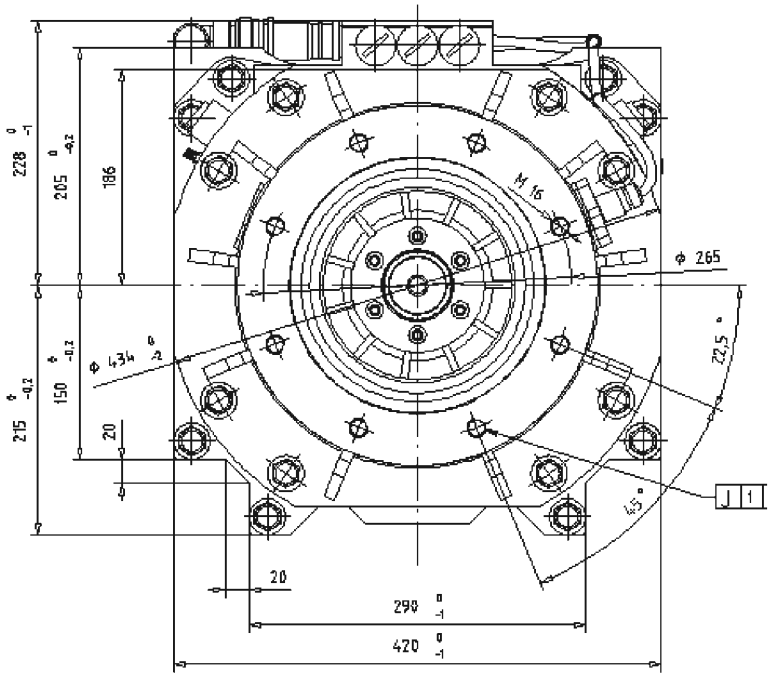

3.3.4 Motor Speed Sensors

3.3.4.1 General

Each traction motor is equipped with one inductive motor speed sensor. The sensor's metallic housing is of protection class IP 68. It has a standard flange for simple mounting without adjustment.

The power supply is provided by the Traction Control Unit (ECON). It is isolated from the 24VC board network. Outputs of the speed sensors are short-circuit proof.

3.3.4.2 Technical Data

Type of output signal:	digital
Nominal supply voltage:	24 VDC +/- 10%
Nominal supply current:	≤ 40 mA (per channel)
Output current:	≤ 20 mA, short-circuit proof
Output frequency:	0…25 kHz
High level:	VCC...(VCC – 3V)
Low level:	0…2 V
Temperature range:	-40°C … +120°C
Protection class:	IP 68

The speed sensors provide two digital signals with 90° phase shift. The sensors generate also the invers signal to each signal. This ensures high interference immunity and reliable function even under adverse operating conditions.

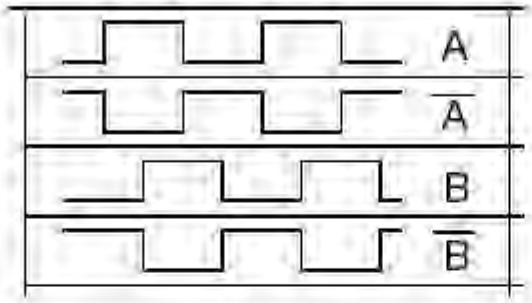

3.3.4.3 Dimensions

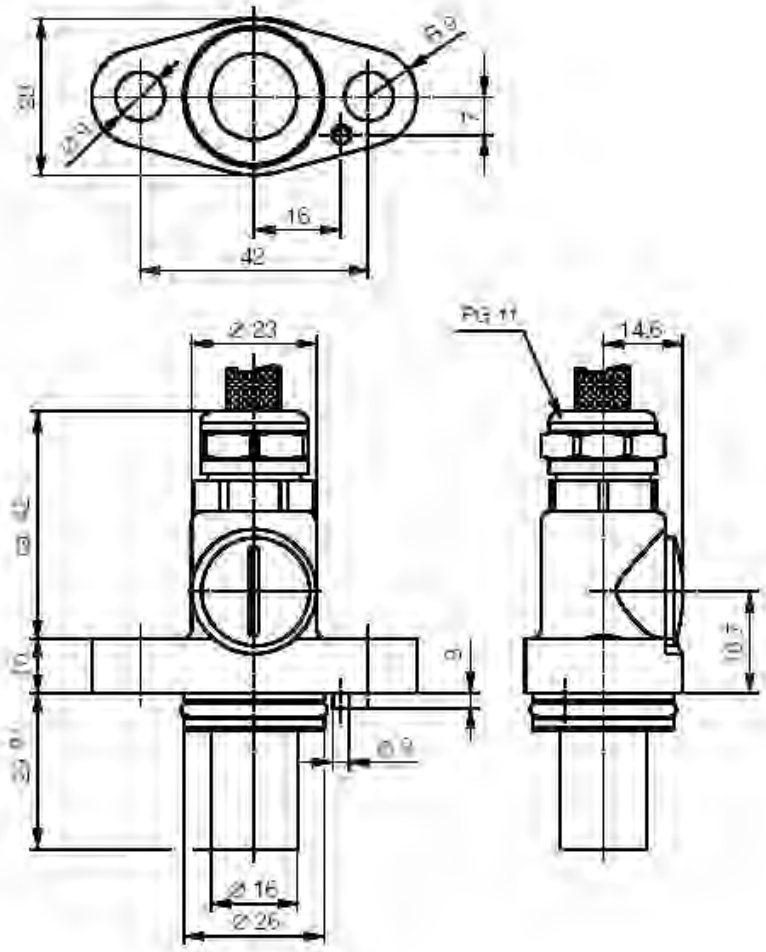

3.4 High Speed Circuit Breaker

3.4.1 General

In order to sense line currents exceeding operational limits that might damage cables or equipment, the power supply of the tram is protected by a heavy duty, transit-proven, high-speed circuit breaker capable of handling the short circuit capacity. The HSCB is type UR6-31 (Secheron).

3.4.2 Technical data

Nominal voltage	1000 V DC
Nominal current (In)	1000 A (T_{amb} = 40°C)
Intervention time	2 ms with di/dt >= 5.10 6 A/s
Breaking capacity	30 kA with τ = 15 ms
Direct over current release:	1900 A DC
Ambient temperature	-25 °C…+50 °C
Protection degree	IP 55 (standardised insulated housing)

<u>Coil data (electric holding):</u>

Nominal voltage	24 V DC
Rated power for closing	835 W
Rated power for holding	2,5 W

<u>Auxiliary contacts:</u>

Nominal current / voltage	1 A / 24 V DC
Type	6 normally open contacts and 6 normally closed contacts

3.4.3 Characteristics

Breaking current and other values are depending on the net characteristics. Therefore they can determined not before the net characteristics are defined. The following figure shows the principal characteristics.

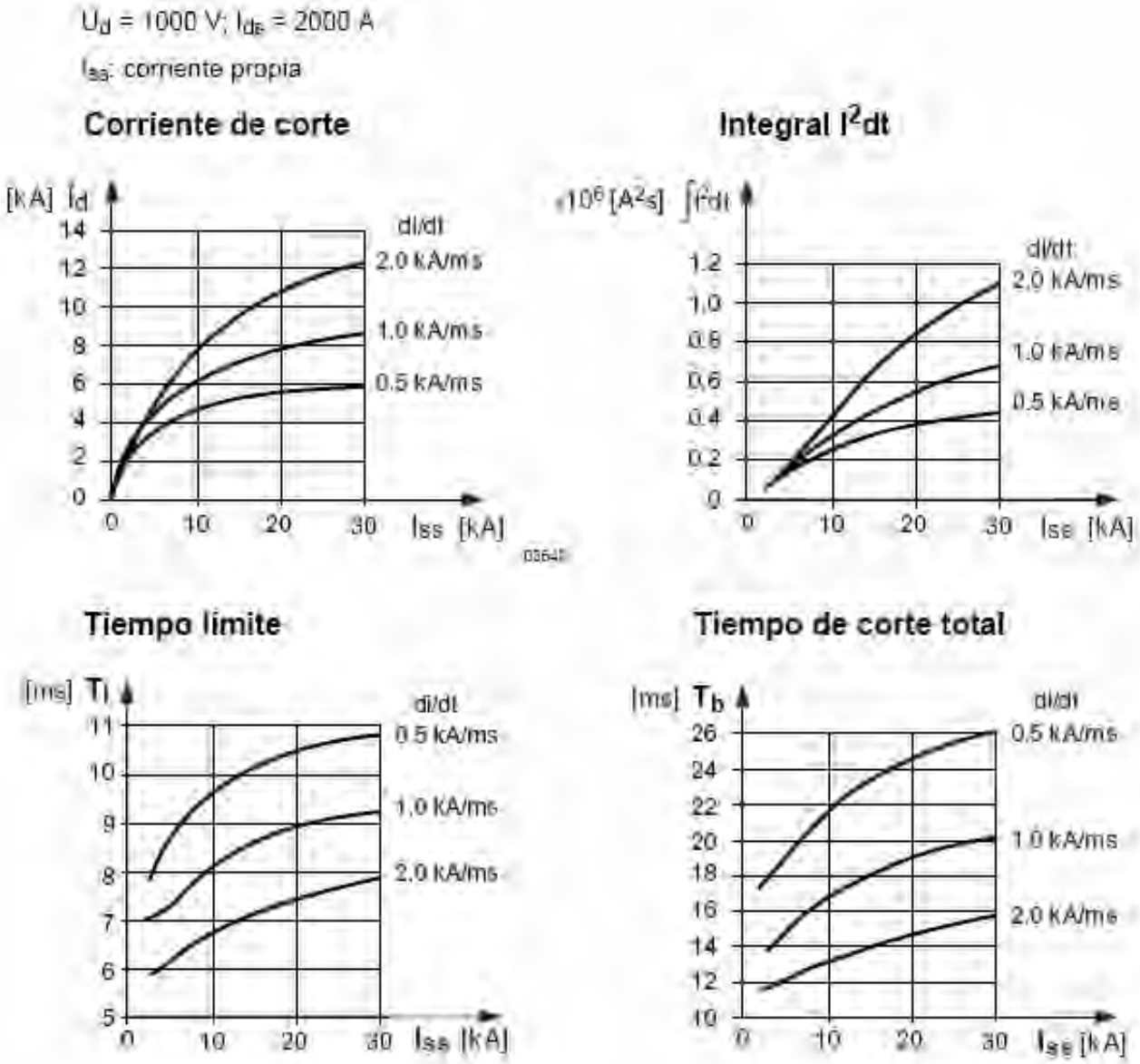

3.4.4 Dimensions

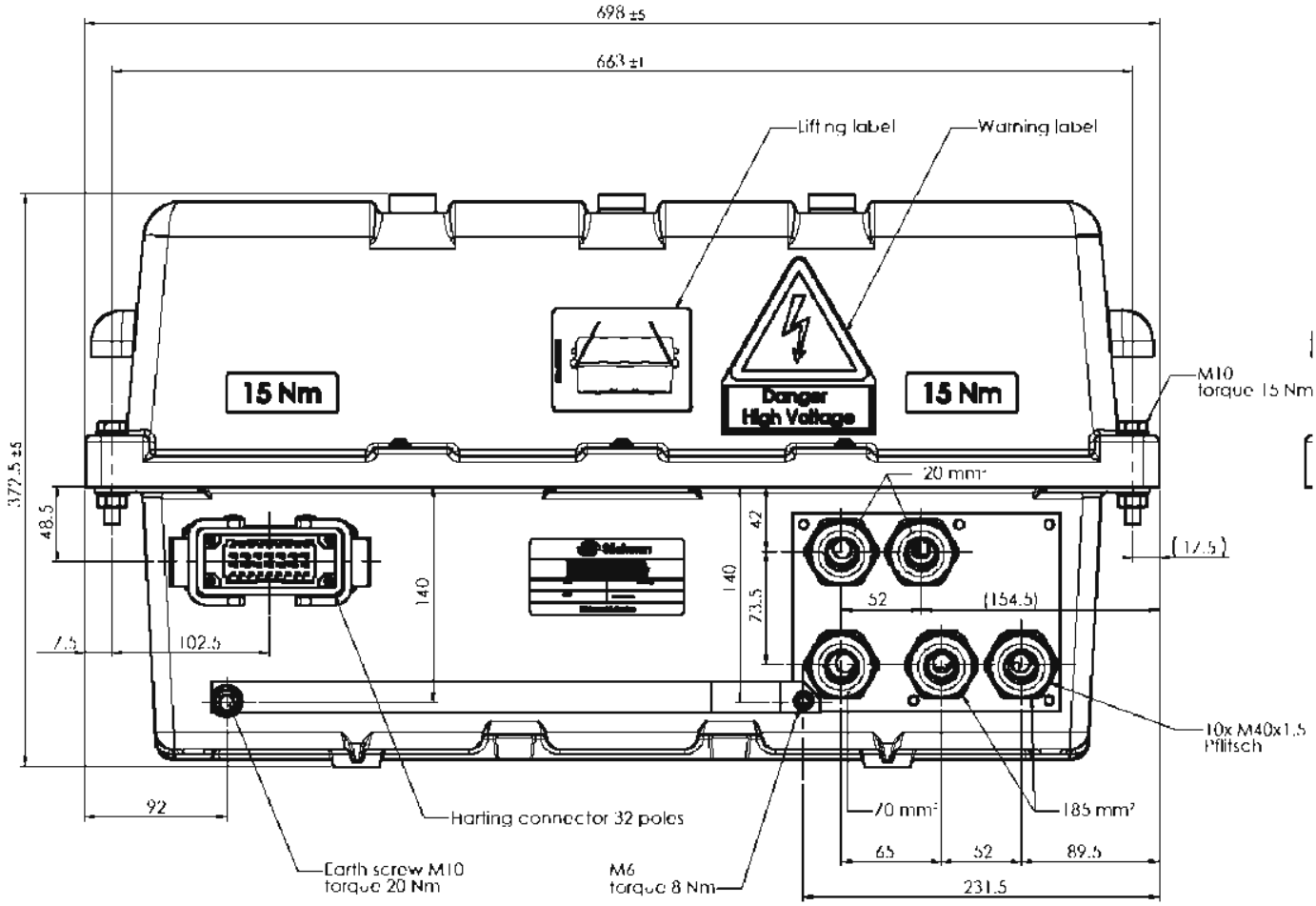

View A

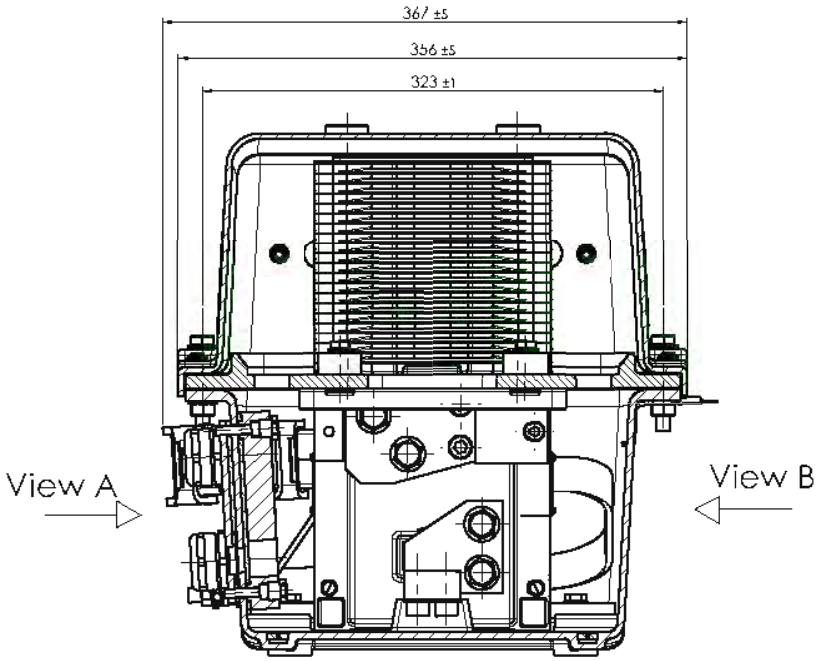

B-B

3.5 Master Controller

3.5.1 General

The set values for tractive/braking effort are derivated from the deflection of the master controller's T-handle.

The master controller is designed to be moved linearly with the left hand.

There are three detents, notifying the transition from:

- zero position to propulsion position
- zero position to brake position
- brake position to emergency brake position

The master controller has contacts that inform the train of the position of the controller as follows:

- Propulsion position: 2 NO (+ 1 NO for degraded mode)
- Braking position: 2 NC and 1 NO (+ 1 NO for degraded mode)
- Emergency braking position: 2 NC and 2 NO

The master controller is also equipped with a deadman switch in shape of a press button on the handle to be operated by the driver's thumb.

All components of the master controller, except the handle, are situated under the surface of the drivers desk.

3.5.2 Technical data

Nominal supply voltage:	30VDC (18…35 VDC)
Auxiliary contacts:	In total 10 switches. Each switch provides one potential free normally closed (NC) and one potential free normally open (NO) contact (max. 2A / 24VDC). Two switches of them have gold plated contacts (max. 40mA / 24VDC).
Dead man contacts:	One switch provides one NC and one NO for deadman function (deadman function has to be realized externally; the master controller provides only the contacts). The contacts of this switch are gold plated (max. 40mA / 24VDC).
Type of protection:	IP00
Encoder Type:	Opto electronic encoder with PWM output with frequency 1 kHz

3.5.3 Drawings

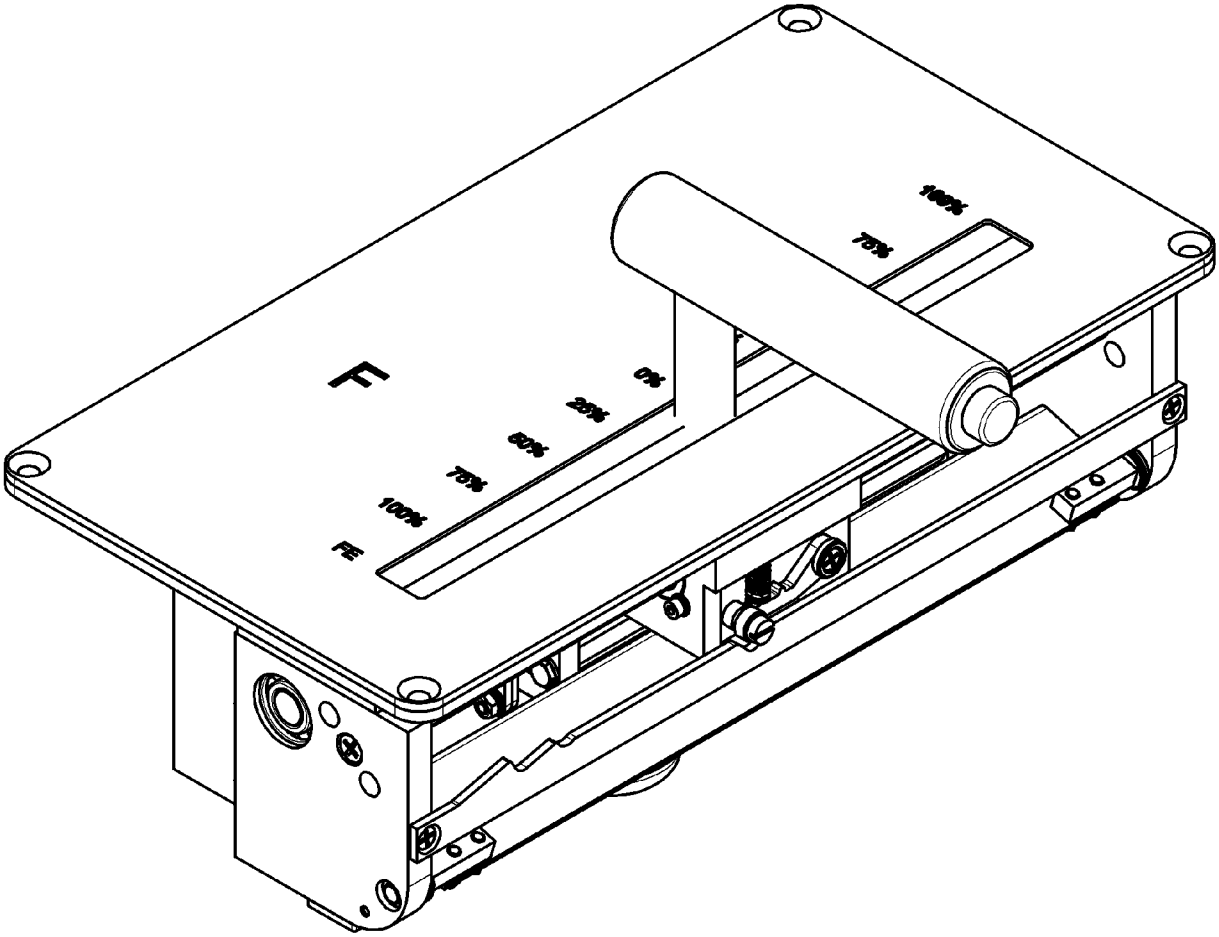

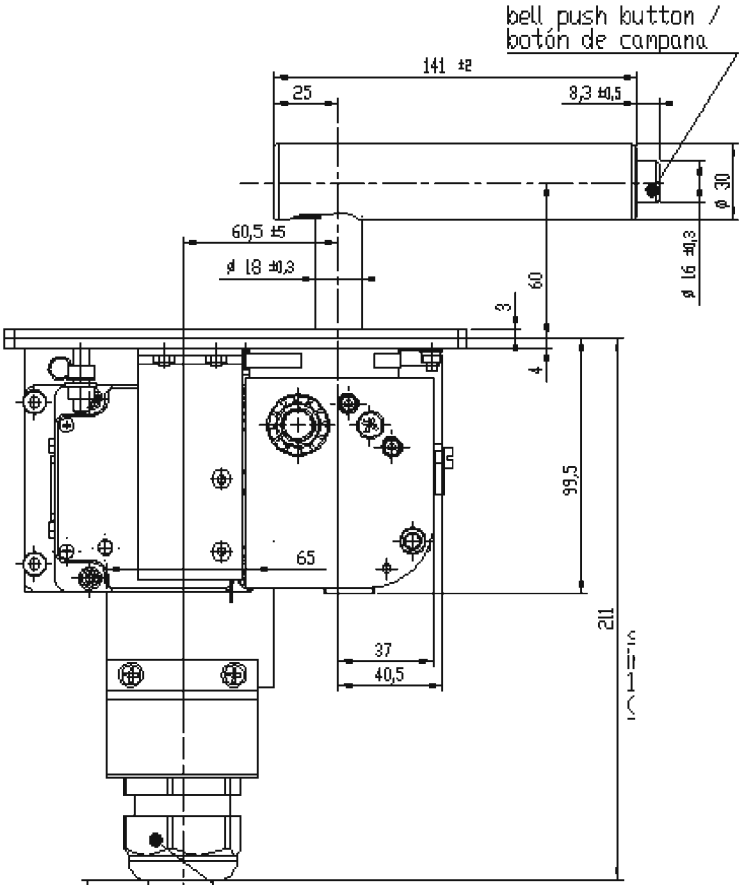
bell push button /
botón de campana
141 ±2
25
8,3 ±0,5
ø 30
60,5 ±5
ø 18 ±0,3
ø 16 ±0,3
60
3
4
99,5
65
211
37
40,5

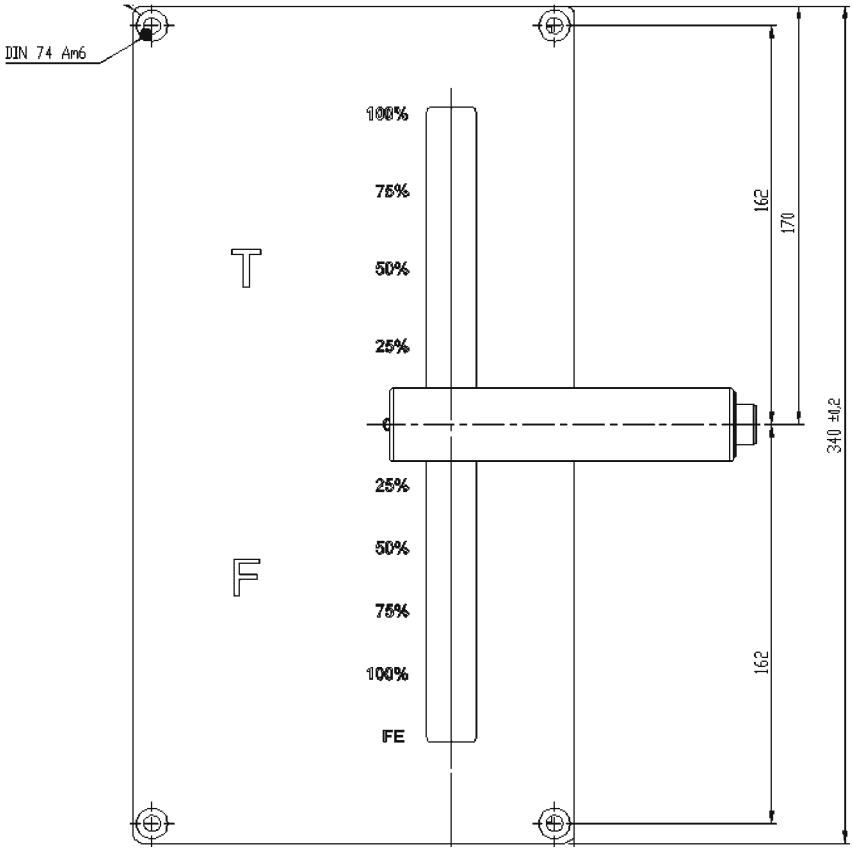
DIN 74 Am6
100%
75%
50%
25%
T
25%
50%
75%
100%
F
FE
162
170
340 ±0,2
162

Weight of vehicle	54.841	t
Pay Load	18.471	t
Wheel diameter	590	mm
Gear ratio	5.440	/ 1
Linevoltage motoring mode	750	V
Linevoltage braking mode	900	V
max. acceleration (90%)	1.08	m/s^2
Mean deceleration (75 %)	0.90	m/s^2
Efficiency of gear box	96	%
Number of inverters per car	6	
Number of motors per inverter	2	
Number of brake resistors	6	

Ocean Terminal - Edinburgh Airport

station		distance in m	dwell time in s	ride time in s	journey time in s	receipted energy in Wh	regenerated energy in Wh	RMS motor current in A	RMS line current in A	brake time in s	brake power in kW
Ocean Terminal 1	OCT	837	25	121	146	5477	2426	65	426	24	364
Ocean Drive 2	OCD	483	25	74	99	2705	807	58	292	14	208
Constitution Street 3	COS	548	25	84	109	5751	1782	72	465	16	401
Foot of the Walk 4	FOW	564	25	61	86	5795	1262	69	538	14	325
Balfour Street 5	BAS	638	25	66	91	6219	1141	66	524	14	293
McDonald Road 6	MDR	560	25	64	89	7725	1173	77	631	14	302
Picardy Place 7	PIP	696	25	91	116	8742	2291	78	619	26	317
St Anrew Square 8	SAS/NSA	718	25	88	113	2871	2106	60	325	20	379
Princes Street 9	PSW	673	25	68	93	5588	3030	76	598	20	545
Shandwick Place 10	SHP	594	25	74	99	2609	2049	65	416	15	492
Haymarket 11 ROJ included	HAY	1221	25	167	192	6222	3525	58	379	24	529
Murrayfield 12	MUR	1057	25	84	109	7011	3389	72	624	20	610
Balgreen Road 13	BAR	1642	25	150	175	11244	5142	64	528	35	529
Saughton Road North 14	SRN	1263	25	85	110	8569	4457	78	716	18	891
South Gyle Access 15	SGA	786	25	62	87	6469	2722	75	668	20	490
Edinburgh Park South 16	EPS	795	25	91	116	5106	2797	65	452	14	719
Edinburgh Park 17	EDP	828	25	64	89	5405	3045	74	644	20	548
Gyle 18 DEH included	GYL	1096	25	129	154	6899	2391	60	413	18	478
Gagarburn 19	GOG	1756	25	170	195	9176	5712	67	499	32	643
Ingliston Park and Ride 20	IPR	823	25	64	89	4755	3411	65	565	22	558
Edinburgh Airport	AIR										
Total		**17578**			**2357**	**124338**	**54658**	**68**	**516**		

Results of teh calculation:

Energy drawn from line	124.34 kWh	7.07 kWh/km
Dynamic brake energy	54.66 kWh	3.11 kWh/km
Total energy consumption	69.68 kWh	3.96 kWh/km

Journey time	39.28 min
Journey speed	26.85 km/h
RMS motor current	68 A
Average power of each brake resistor	14 kW

Vossloh KIEPE GmbH
DÜSSELDORF
Abt. E2

09.07.07
09070700

Edinburgh Tram Network

Tram-AIR-OCT
Edinburgh Airport-Ingliston Park and Ride

Weight of vehicle.....	54.84t
Pay load.....	18.47t
Line voltage Mo/Br.....	750V/ 900V
Distance between stops.....	823.0m
Dwell time.....	25.0s
Wheel diameter.....	590mm
Gear ratio.....	5.440/ 1
Max. acceleration.....	1.08m/s²
Max. deceleration.....	1.09m/s²
Mean deceleration.....	.90m/s²
Adhesion coefficient Mo/Br.....	.15 / .09
RMS line current tot/Mo.....	642A/ 578A
Journey speed.....	32.8km/h
RMS motor current.....	71A
Energy drawn from line.....	6644.4Wh
Dynamic brake energy.....	2517.9Wh
Total energy consumption.....	4126.5Wh

109m/ 0.0%/ 50km/h - 136m/ .9%/ 50km/h
44m/ .9%/ 70km/h - 50m/-2.4%/ 70km/h
120m/ 0.0%/ 70km/h - 60m/ 3.5%/ 70km/h
190m/ 0.0%/ 70km/h - 114m/ 3.6%/ 70km/h

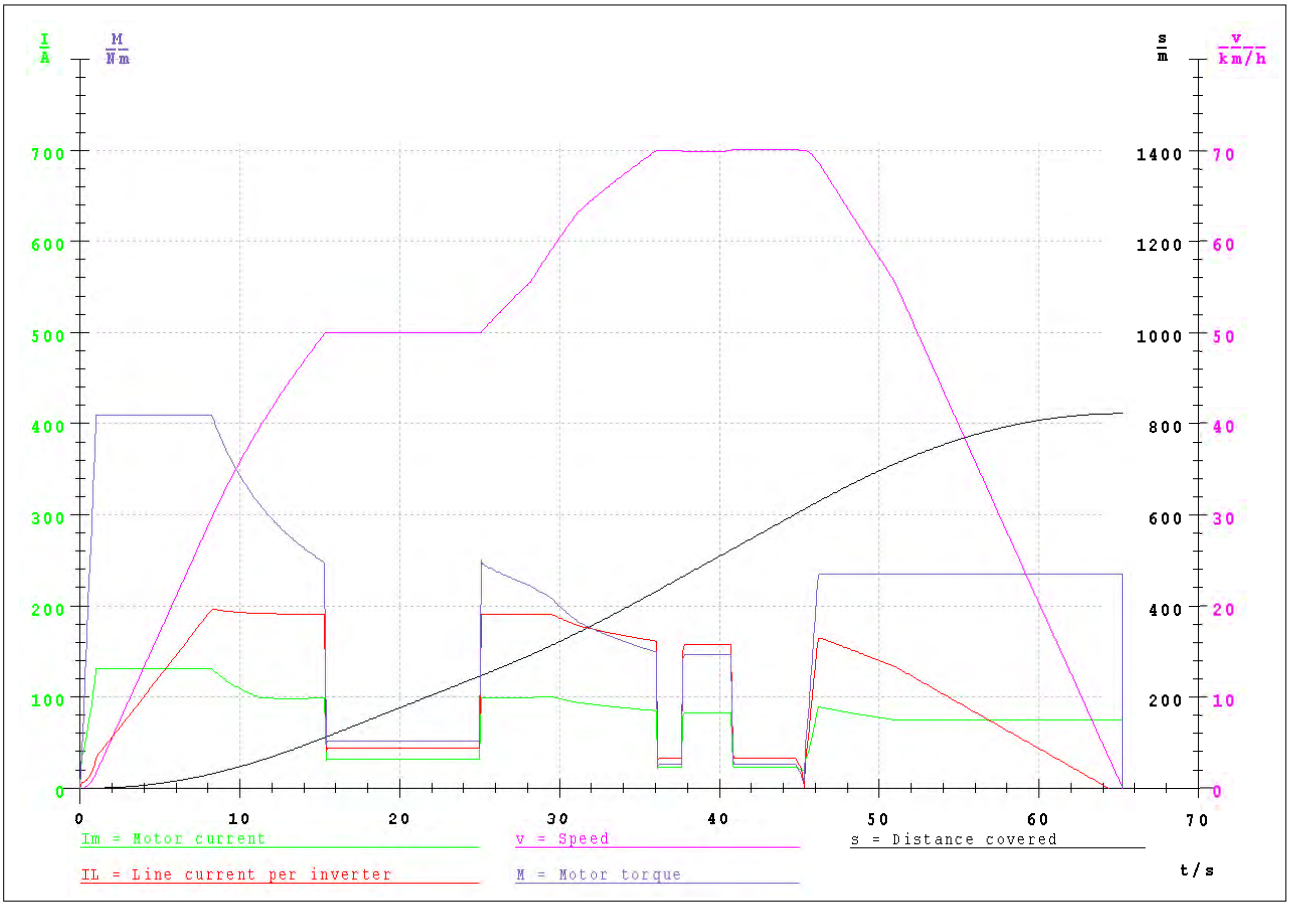

Vossloh KIEPE GmbH
DÜSSELDORF
Abt. E2

09.07.07
09070701

Edinburgh Tram Network

Tram-AIR-OCT AW2
Ingliston Park and Ride-Gogarburn

```
Weight of vehicle.............  54.84t
Pay load......................  18.47t
Line voltage Mo/Br............  750V/ 900V
Distance between stops......... 1756.0m
Dwell time....................  25.0s
Wheel diameter................  590mm
Gear ratio....................  5.440/ 1
Max. acceleration.............  1.20m/s²
Max. deceleration.............  1.15m/s²
Mean deceleration.............   .90m/s²
Adhesion coefficient Mo/Br.....  .15 / .16
RMS line current tot/Mo........  565A/ 565A
Journey speed.................  32.8km/h
RMS motor current.............   71A
Energy drawn from line......... 11855.4Wh
Dynamic brake energy...........  3592.6Wh
Total energy consumption.......  8262.8Wh
  72m/ 3.6%/ 70km/h -   44m/ 3.6%/ 20km/h
 106m/-1.7%/ 20km/h -  104m/-1.7%/ 70km/h
 100m/ 3.9%/ 70km/h -   70m/-1.6%/ 70km/h
  80m/ -.5%/ 70km/h -   80m/ 3.4%/ 70km/h
 210m/-1.0%/ 70km/h -   80m/ 2.8%/ 70km/h
  90m/ 0.0%/ 70km/h -  336m/  .7%/ 70km/h
 244m/  .7%/ 20km/h -   70m/ 3.6%/ 20km/h
```

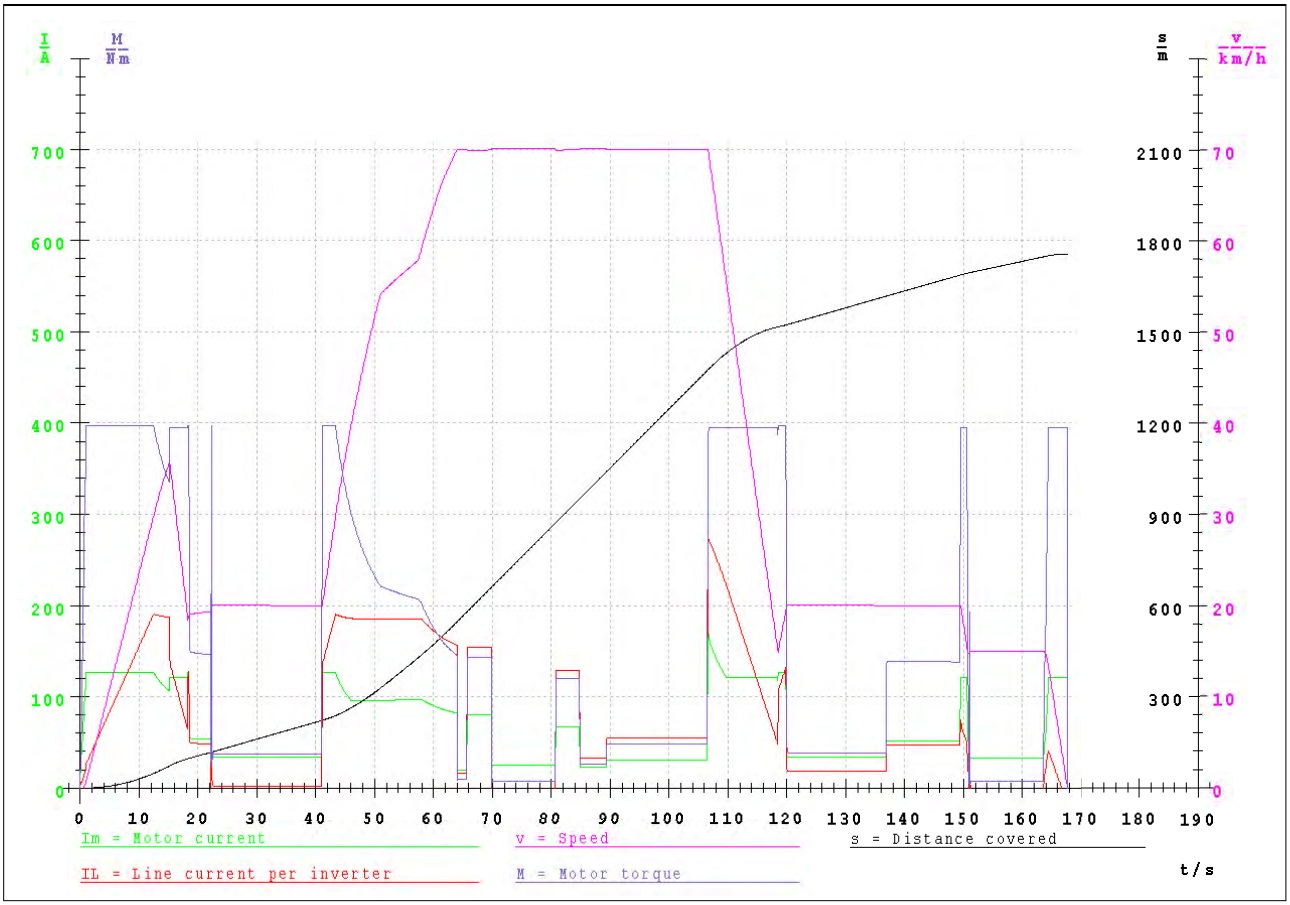

Vossloh KIEPE GmbH
DÜSSELDORF
Abt. E2

09.07.07
09070702

Edinburgh Tram Network

Tram-AIR-OCT AW2
Gogarburn-Gyle DEH included

Weight of vehicle..... 54.84t
Pay load..... 18.47t
Line voltage Mo/Br..... 750V/ 900V
Distance between stops..... 1096.0m
Dwell time..... 25.0s
Wheel diameter..... 590mm
Gear ratio..... 5.440/ 1
Max. acceleration..... 1.15m/s²
Max. deceleration..... 1.01m/s²
Mean deceleration..... .90m/s²
Adhesion coefficient Mo/Br..... .16 / .13
RMS line current tot/Mo..... 393A/ 386A
Journey speed..... 25.7km/h
RMS motor current..... 61A
Energy drawn from line..... 5708.8Wh
Dynamic brake energy..... 2143.0Wh
Total energy consumption..... 3565.8Wh
264m/ -.8%/ 40km/h - 80m/-4.4%/ 40km/h
72m/ -.9%/ 40km/h - 298m/ .9%/ 45km/h
190m/ 0.0%/ 18km/h - 80m/ 5.5%/ 30km/h
112m/ 0.0%/ 30km/h - 0m/ 3.4%/ 70km/h

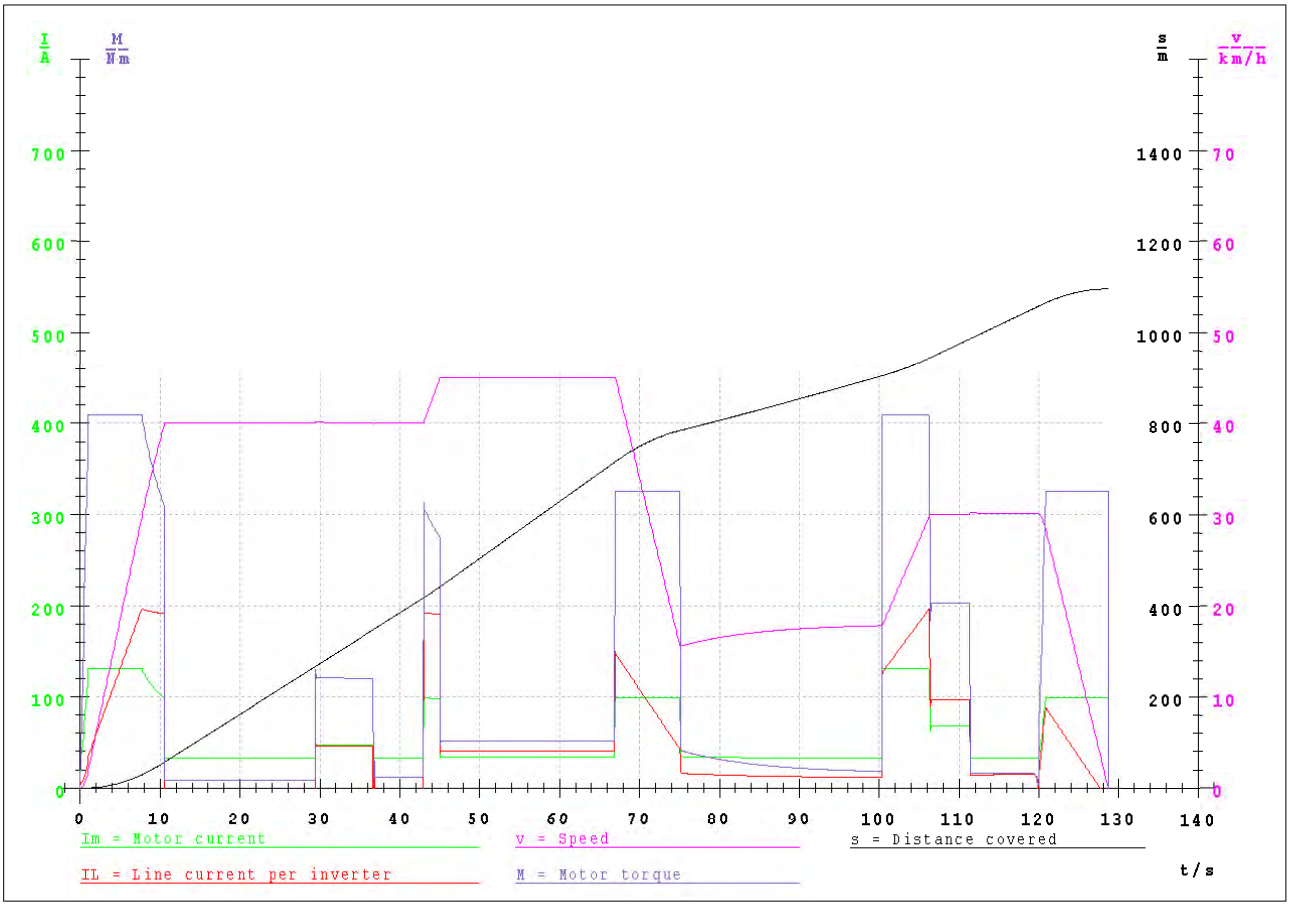

Vossloh KIEPE GmbH
DÜSSELDORF
Abt. E2

09.07.07
09070703

Edinburgh Tram Network

Tram-AIR-OCT AW2
Gyle-Edinburgh Park

Weight of vehicle.....	54.84t
Pay load.....	18.47t
Line voltage Mo/Br.....	750V/ 900V
Distance between stops.....	828.0m
Dwell time.....	25.0s
Wheel diameter.....	590mm
Gear ratio.....	5.440/ 1
Max. acceleration.....	1.08m/s²
Max. deceleration.....	.95m/s²
Mean deceleration.....	.90m/s²
Adhesion coefficient Mo/Br.....	.15 / .12
RMS line current tot/Mo.....	576A/ 481A
Journey speed.....	28.2km/h
RMS motor current.....	69A
Energy drawn from line.....	5289.1Wh
Dynamic brake energy.....	3160.6Wh
Total energy consumption.....	2128.5Wh

148m/ 0.0%/ 25km/h - 60m/-1.3%/ 25km/h
330m/ -.9%/ 70km/h - 290m/ 0.0%/ 70km/h

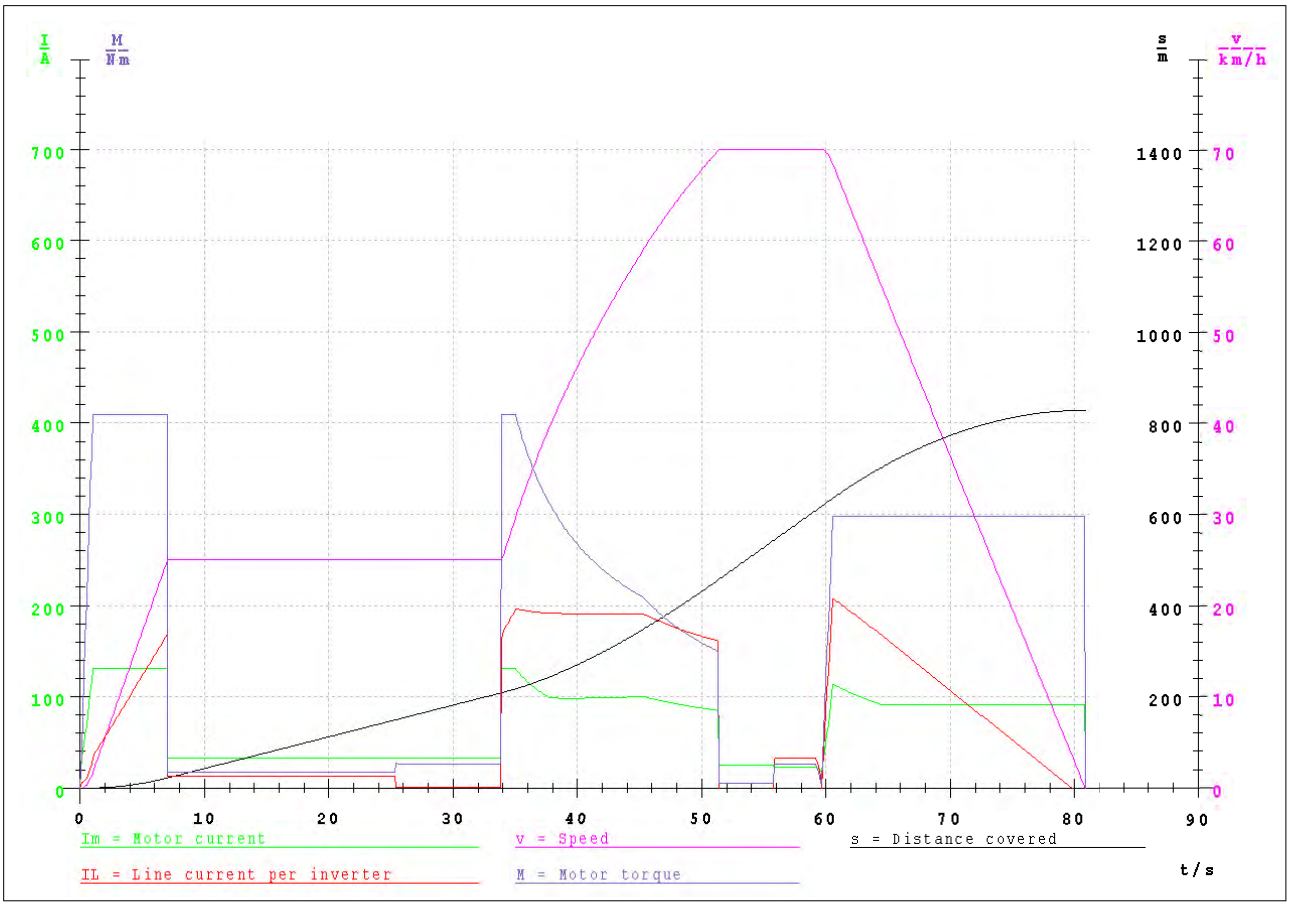

Vossloh KIEPE GmbH
DÜSSELDORF
Abt. E2

09.07.07
09070704

Edinburgh Tram Network

Tram-AIR-OCT AW2
Edinburgh Park-Edinburgh Park South

Weight of vehicle.....	54.84t
Pay load.....	18.47t
Line voltage Mo/Br.....	750V/ 900V
Distance between stops.....	795.0m
Dwell time.....	25.0s
Wheel diameter.....	590mm
Gear ratio.....	5.440/ 1
Max. acceleration.....	1.08m/s²
Max. deceleration.....	1.07m/s²
Mean deceleration.....	.90m/s²
Adhesion coefficient Mo/Br.....	.15 / .14
RMS line current tot/Mo.....	473A/ 427A
Journey speed.....	24.9km/h
RMS motor current.....	66A
Energy drawn from line.....	5700.9Wh
Dynamic brake energy.....	2507.4Wh
Total energy consumption.....	3193.5Wh

315m/ 0.0%/ 35km/h - 190m/ 5.7%/ 35km/h
40m/ 0.0%/ 35km/h - 97m/-5.4%/ 35km/h
53m/-5.4%/ 70km/h - 60m/ 0.0%/ 70km/h
40m/-1.4%/ 70km/h - 0m/ 0.0%/ 70km/h

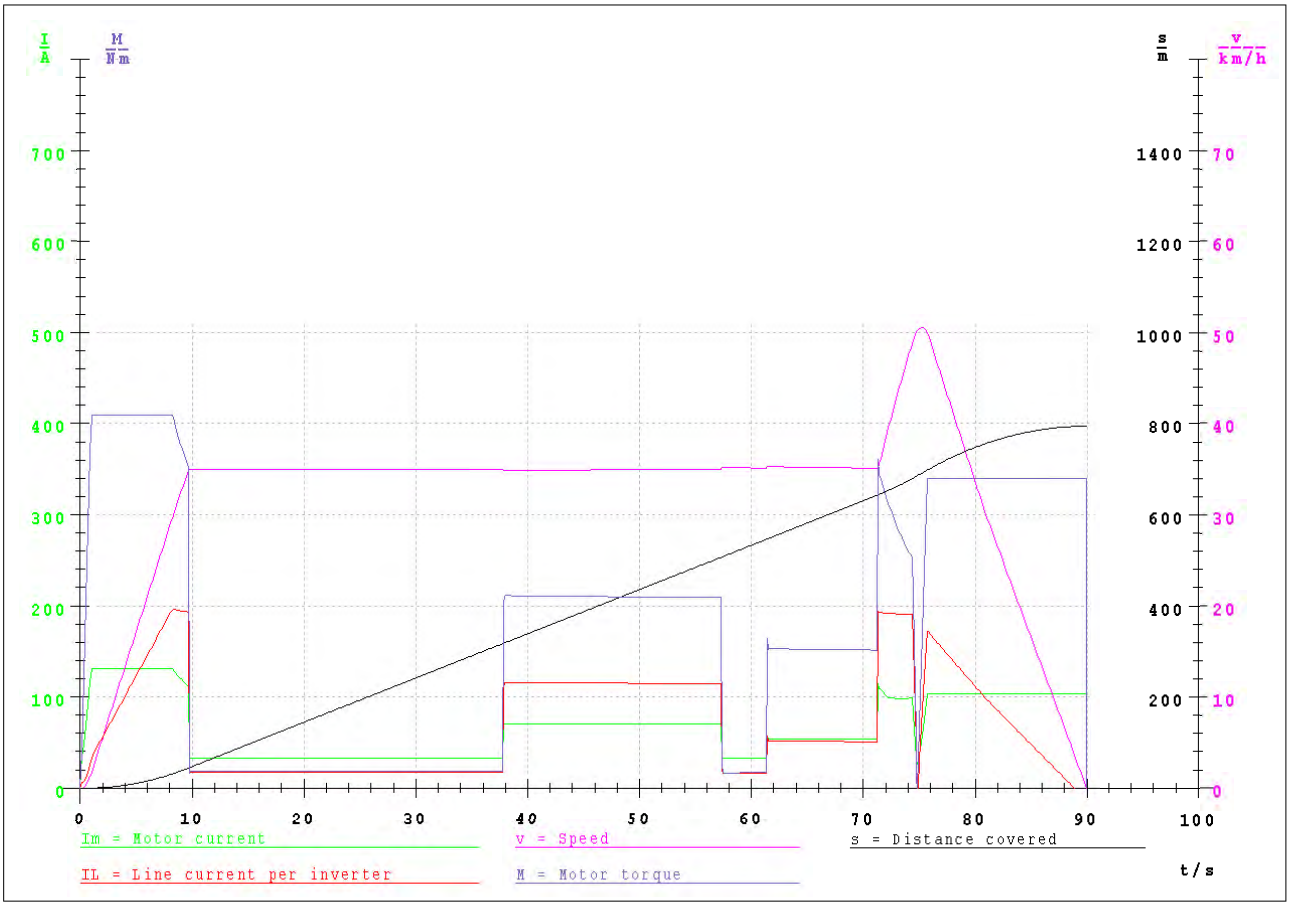

Vossloh KIEPE GmbH
DÜSSELDORF
Abt. E2

09.07.07
09070705

Edinburgh Tram Network

Tram-AIR-OCT AW2
Edinburgh Park South-South Gyle Access

Weight of vehicle.....	54.84t
Pay load.....	18.47t
Line voltage Mo/Br.....	750V/ 900V
Distance between stops.....	786.0m
Dwell time.....	25.0s
Wheel diameter.....	590mm
Gear ratio.....	5.440/ 1
Max. acceleration.....	1.20m/s²
Max. deceleration.....	.96m/s²
Mean deceleration.....	.90m/s²
Adhesion coefficient Mo/Br.....	.15 / .13
RMS line current tot/Mo.....	641A/ 526A
Journey speed.....	33.1km/h
RMS motor current.....	74A
Energy drawn from line.....	5090.1Wh
Dynamic brake energy.....	3282.4Wh
Total energy consumption.....	1807.7Wh

190m/-1.4%/ 70km/h - 596m/ -.3%/ 70km/h

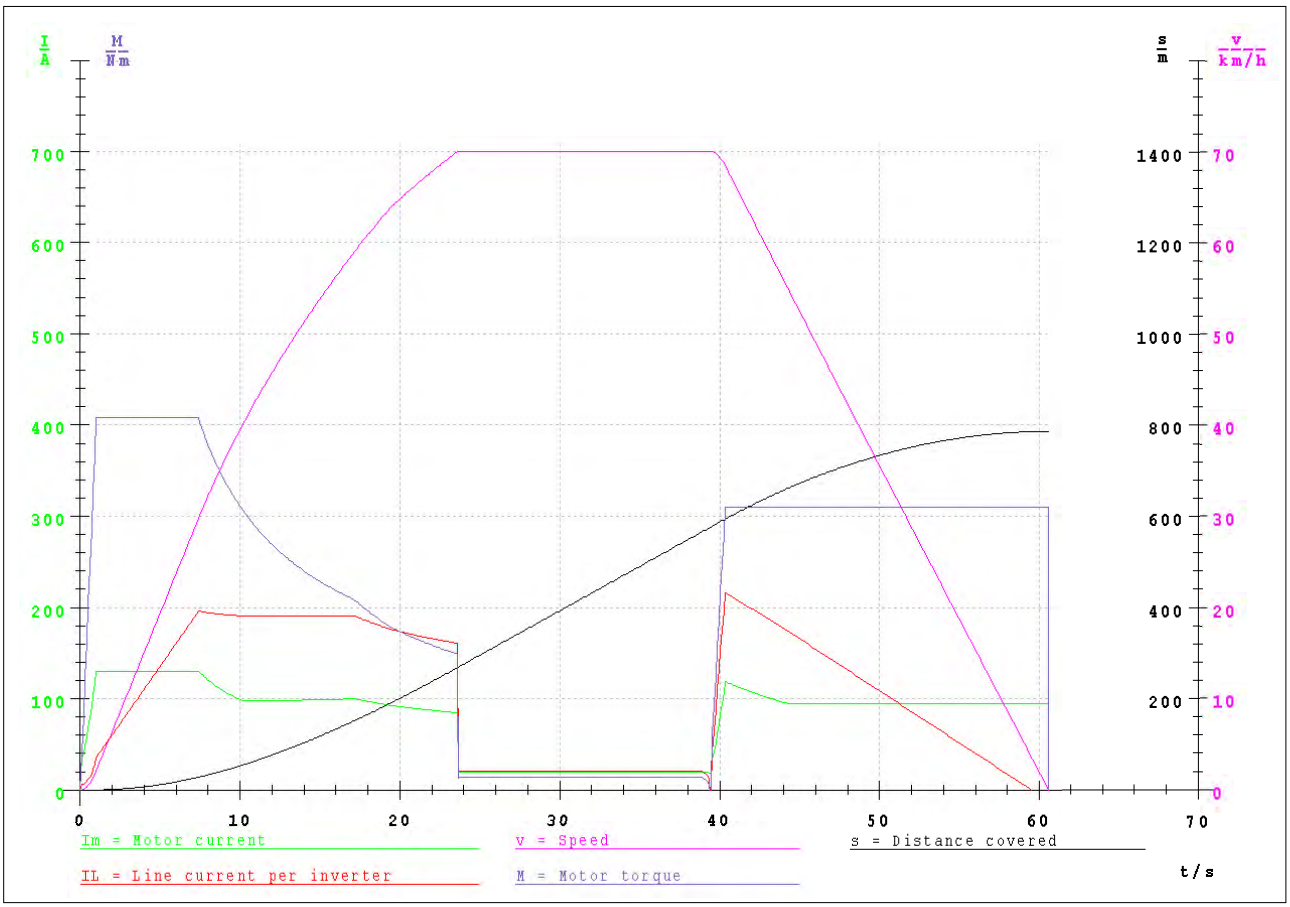

Vossloh KIEPE GmbH
DÜSSELDORF
Abt. E2

09.07.07
09070706

Edinburgh Tram Network

Tram-AIR-OCT AW2
South Gyle Access-Saughton Road North

Weight of vehicle..... 54.84t
Pay load..... 18.47t
Line voltage Mo/Br..... 750V/ 900V
Distance between stops..... 1263.0m
Dwell time..... 25.0s
Wheel diameter..... 590mm
Gear ratio..... 5.440/ 1
Max. acceleration..... 1.08m/s²
Max. deceleration..... .95m/s²
Mean deceleration..... .90m/s²
Adhesion coefficient Mo/Br..... .15 / .12
RMS line current tot/Mo..... 670A/ 595A
Journey speed..... 40.5km/h
RMS motor current..... 73A
Energy drawn from line..... 8384.3Wh
Dynamic brake energy..... 4118.6Wh
Total energy consumption..... 4265.7Wh
124m/ 0.0%/ 70km/h - 100m/ 4.3%/ 70km/h
120m/-5.0%/ 70km/h - 180m/ 0.0%/ 70km/h
70m/ 5.5%/ 70km/h - 30m/ 0.0%/ 70km/h
80m/-5.4%/ 70km/h - 190m/ 0.0%/ 70km/h
120m/ 2.4%/ 70km/h - 249m/ 0.0%/ 70km/h

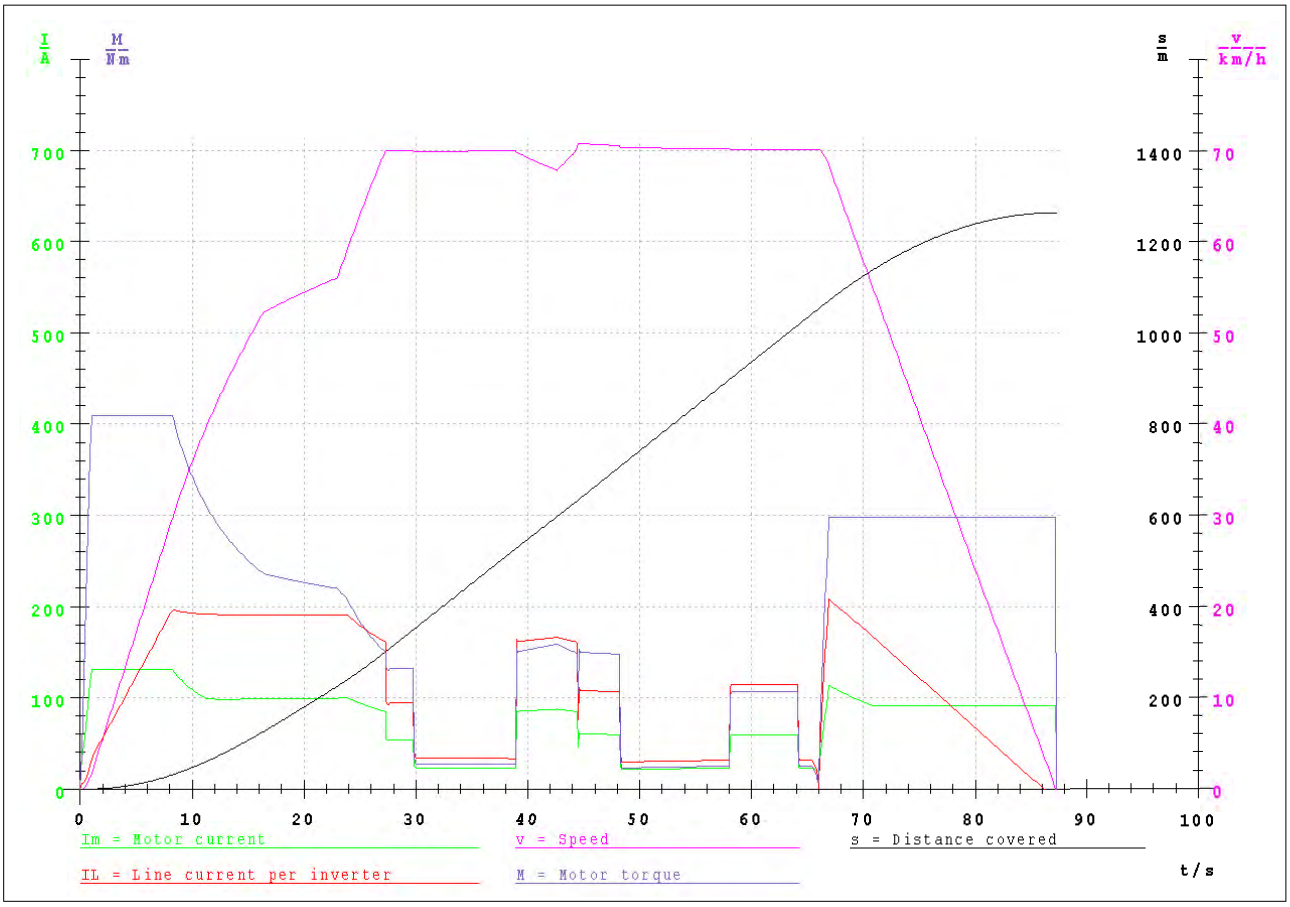

Vossloh KIEPE GmbH
DÜSSELDORF
Abt. E2

09.07.07
09070707

Edinburgh Tram Network

Tram-AIR-OCT AW2
Saughton Road North-Balgreen Road

```
Weight of vehicle.............  54.84t
Pay load......................  18.47t
Line voltage Mo/Br............  750V/ 900V
Distance between stops......... 1642.0m
Dwell time....................  25.0s
Wheel diameter................  590mm
Gear ratio....................  5.440/ 1
Max. acceleration.............  1.20m/s²
Max. deceleration.............   .95m/s²
Mean deceleration.............   .90m/s²
Adhesion coefficient Mo/Br.....  .10 / .13
RMS line current tot/Mo........  616A/ 542A
Journey speed.................  36.4km/h
RMS motor current.............   70A
Energy drawn from line......... 11548.3Wh
Dynamic brake energy...........  6850.8Wh
Total energy consumption.......  4697.5Wh
  51m/ 0.0%/ 70km/h -   60m/ 2.8%/ 70km/h
  70m/-4.1%/ 70km/h -  380m/ 0.0%/ 70km/h
  90m/ 5.8%/ 20km/h -   30m/ 0.0%/ 20km/h
 120m/-5.3%/ 20km/h -  841m/ -.2%/ 80km/h
```

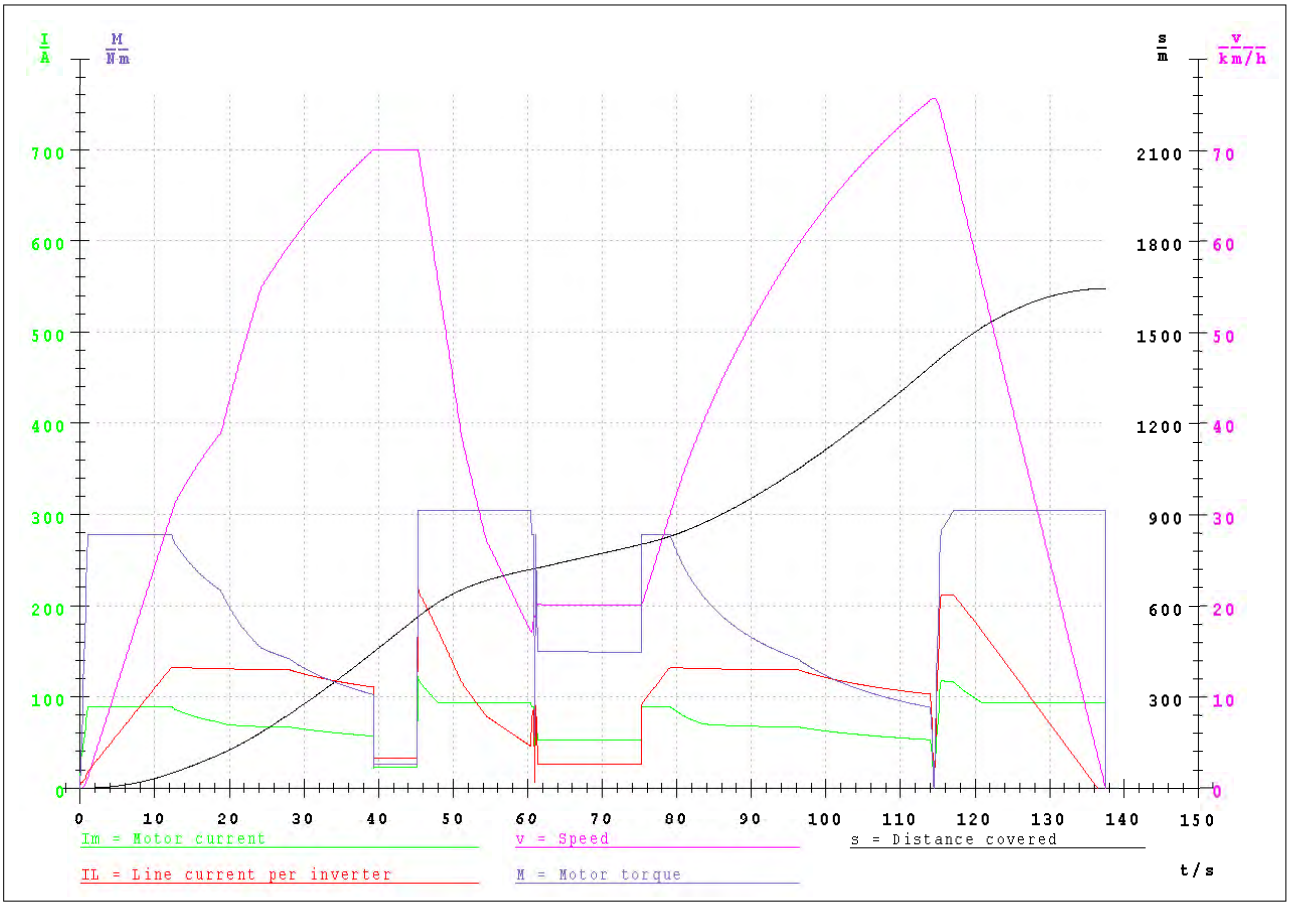

Vossloh KIEPE GmbH
DÜSSELDORF
Abt. E2

09.07.07
09070708

Edinburgh Tram Network

Tram-AIR-OCT AW2
Balgreen Road-Murrayfield

Weight of vehicle..... 54.84t
Pay load..... 18.47t
Line voltage Mo/Br..... 750V/ 900V
Distance between stops..... 1057.0m
Dwell time..... 25.0s
Wheel diameter..... 590mm
Gear ratio..... 5.440/ 1
Max. acceleration..... 1.08m/s²
Max. deceleration..... 1.27m/s²
Mean deceleration..... .90m/s²
Adhesion coefficient Mo/Br..... .15 / .17
RMS line current tot/Mo..... 780A/ 749A
Journey speed..... 37.6km/h
RMS motor current..... 88A
Energy drawn from line..... 8673.4Wh
Dynamic brake energy..... 4721.5Wh
Total energy consumption..... 3951.9Wh
706m/ 0.0%/ 80km/h - 179m/ 0.0%/ 45km/h
80m/ 2.9%/ 45km/h - 70m/-4.0%/ 45km/h
22m/ 0.0%/ 20km/h - 0m/ 0.0%/ 20km/h

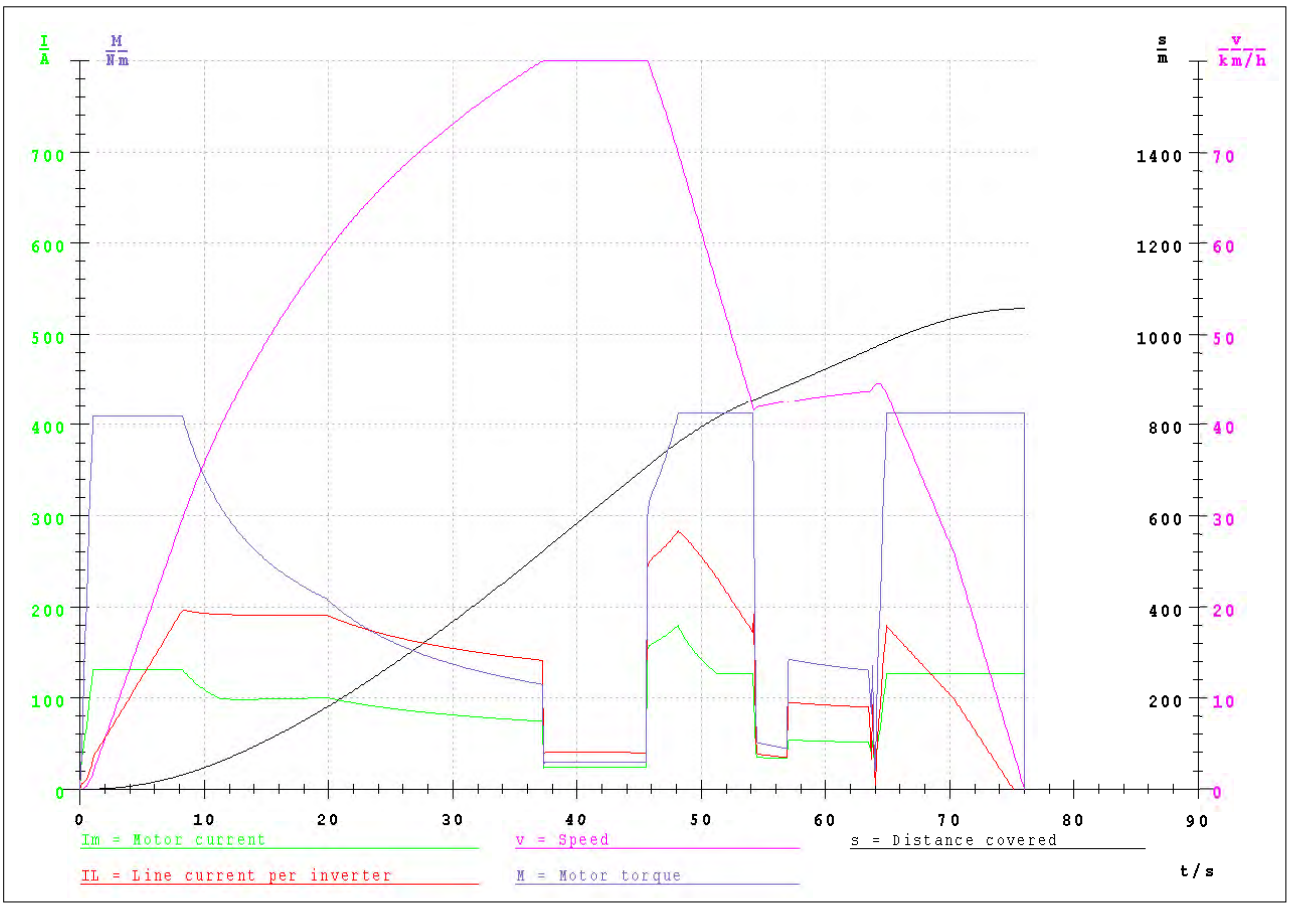

Vossloh KIEPE GmbH
DÜSSELDORF
Abt. E2

09.07.07
09070709

Edinburgh Tram Network

Tram-AIR-OCT AW2
Murrayfield-Haymarket ROJ included

Weight of vehicle..... 54.84t
Pay load..... 18.47t
Line voltage Mo/Br..... 750V/ 900V
Distance between stops..... 1221.0m
Dwell time..... 25.0s
Wheel diameter..... 590mm
Gear ratio..... 5.440/ 1
Max. acceleration..... 1.08m/s²
Max. deceleration..... 1.12m/s²
Mean deceleration..... .90m/s²
Adhesion coefficient Mo/Br..... .15 / .13
RMS line current tot/Mo..... 402A/ 402A
Journey speed..... 24.3km/h
RMS motor current..... 71A
Energy drawn from line..... 7174.9Wh
Dynamic brake energy..... 2091.9Wh
Total energy consumption..... 5083.0Wh
99m/ 0.0%/ 35km/h - 100m/ 0.0%/ 25km/h
249m/ 0.0%/ 37km/h - 40m/ 4.0%/ 25km/h
61m/ 0.0%/ 25km/h - 120m/ 0.0%/ 20km/h
100m/ -.6%/ 30km/h - 300m/ 0.0%/ 50km/h
100m/ 3.8%/ 15km/h - 52m/ .9%/ 15km/h

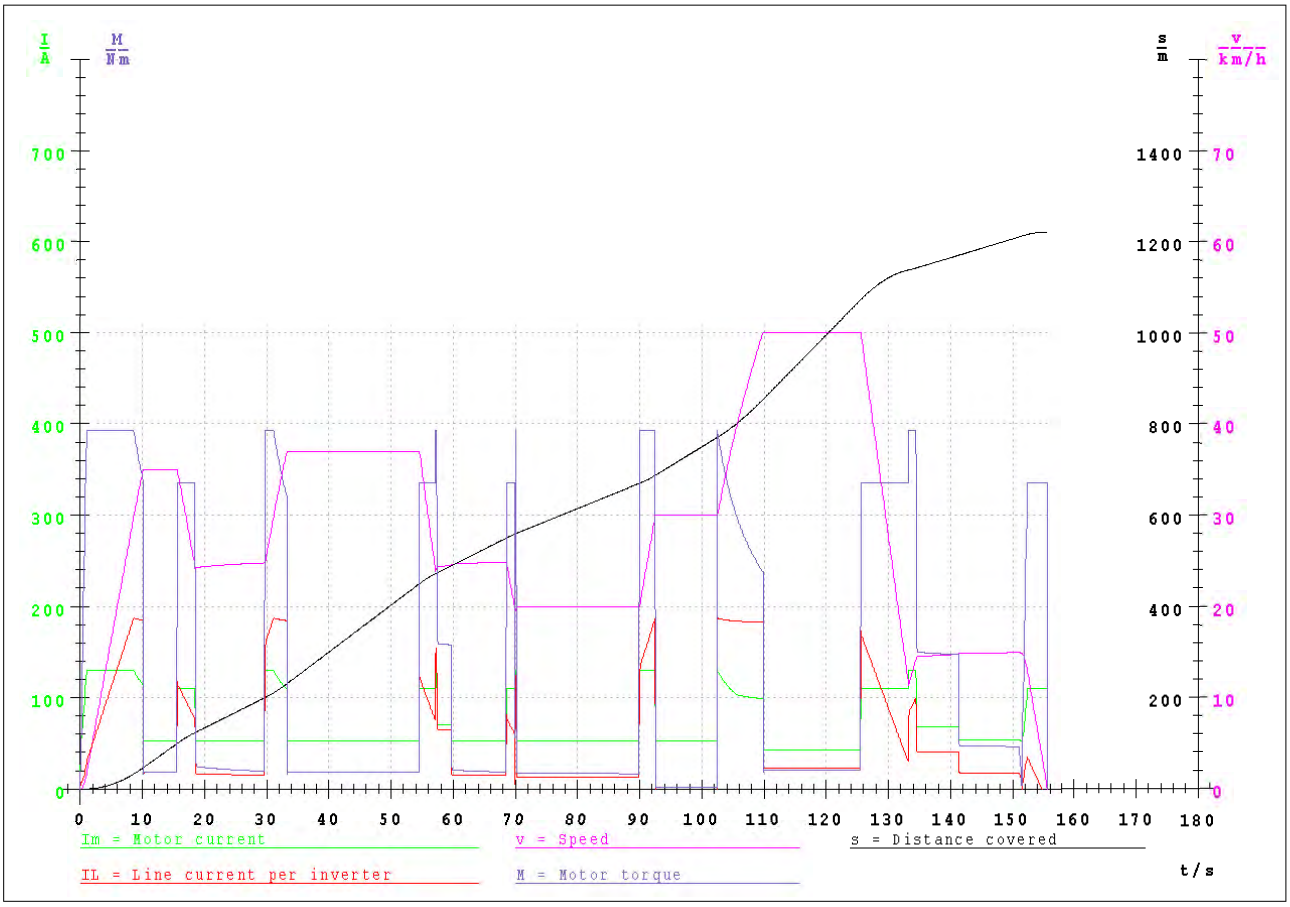

Vossloh KIEPE GmbH
DÜSSELDORF
Abt. E2

09.07.07
09070710

Edinburgh Tram Network

Tram-AIR-OCT AW2
Haymarket-Shandwick Place

Weight of vehicle.....	54.84t
Pay load.....	18.47t
Line voltage Mo/Br.....	750V/ 900V
Distance between stops.....	594.0m
Dwell time.....	25.0s
Wheel diameter.....	590mm
Gear ratio.....	5.440/ 1
Max. acceleration.....	.94m/s²
Max. deceleration.....	.96m/s²
Mean deceleration.....	.90m/s²
Adhesion coefficient Mo/Br.....	.15 / .11
RMS line current tot/Mo.....	392A/ 364A
Journey speed.....	15.2km/h
RMS motor current.....	62A
Energy drawn from line.....	5753.3Wh
Dynamic brake energy.....	1539.9Wh
Total energy consumption.....	4213.4Wh

78m/ 1.5%/ 10km/h -	50m/ 1.7%/ 20km/h
100m/ 1.7%/ 10km/h -	76m/ 1.7%/ 30km/h
80m/ 1.1%/ 50km/h -	144m/ 1.0%/ 50km/h
66m/ 1.0%/ 40km/h -	0m/ 0.0%/ 0km/h

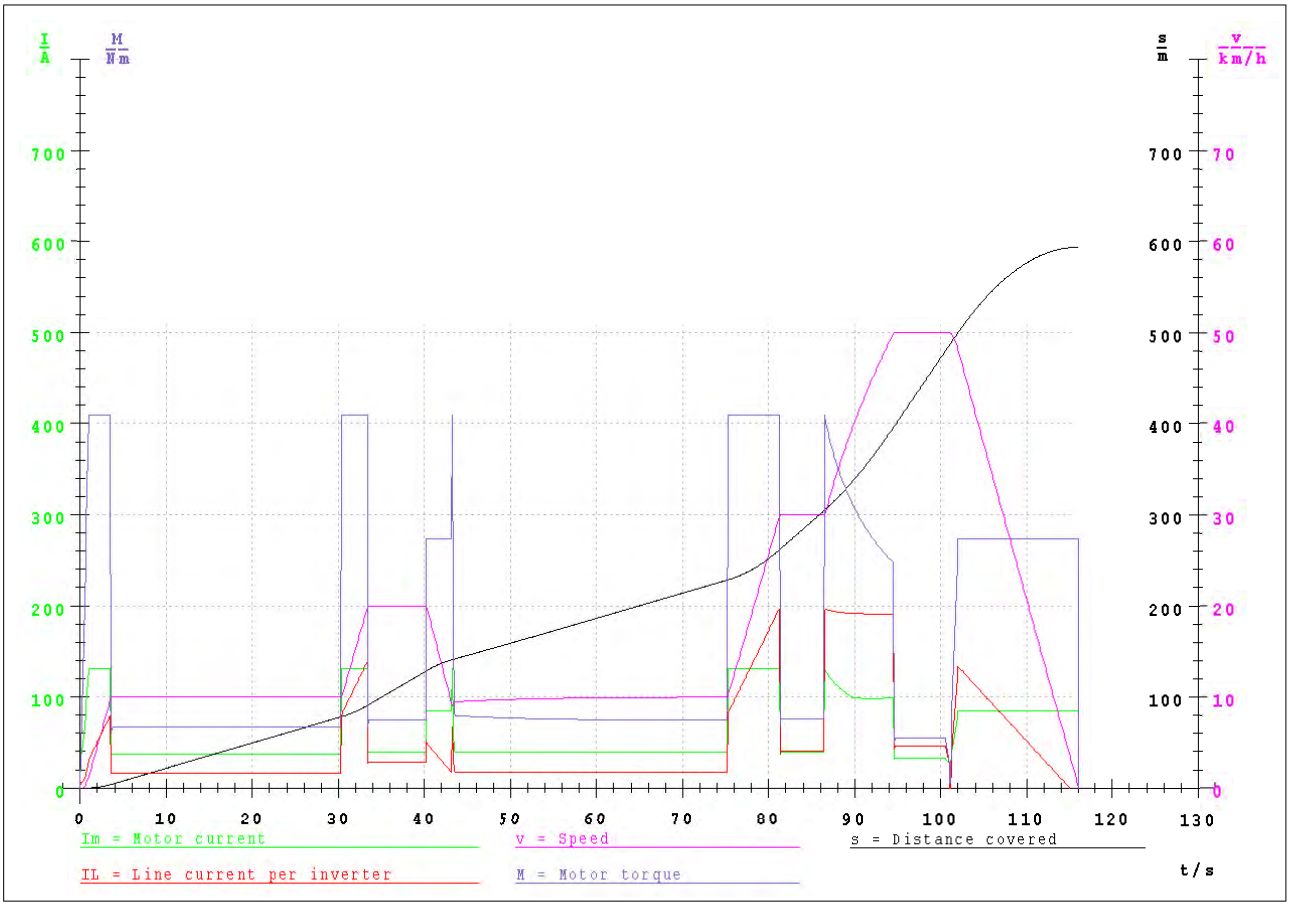

Vossloh KIEPE GmbH
DÜSSELDORF
Abt. E2

09.07.07
09070711

Edinburgh Tram Network

Tram-AIR-OCT AW2
Shandwick Place-Princes Street

Weight of vehicle.....	54.84t
Pay load.....	18.47t
Line voltage Mo/Br.....	750V/ 900V
Distance between stops.....	673.0m
Dwell time.....	25.0s
Wheel diameter.....	590mm
Gear ratio.....	5.440/ 1
Max. acceleration.....	1.08m/s²
Max. deceleration.....	.98m/s²
Mean deceleration.....	.90m/s²
Adhesion coefficient Mo/Br.....	.15 / .13
RMS line current tot/Mo.....	589A/ 553A
Journey speed.....	25.7km/h
RMS motor current.....	76A
Energy drawn from line.....	5200.3Wh
Dynamic brake energy.....	2716.3Wh
Total energy consumption.....	2484.1Wh

170m/ 0.0%/ 40km/h - 75m/ .9%/ 50km/h
75m/ .9%/ 20km/h - 260m/ -.7%/ 50km/h
93m/ 0.0%/ 50km/h - 0m/ 1.0%/ 50km/h

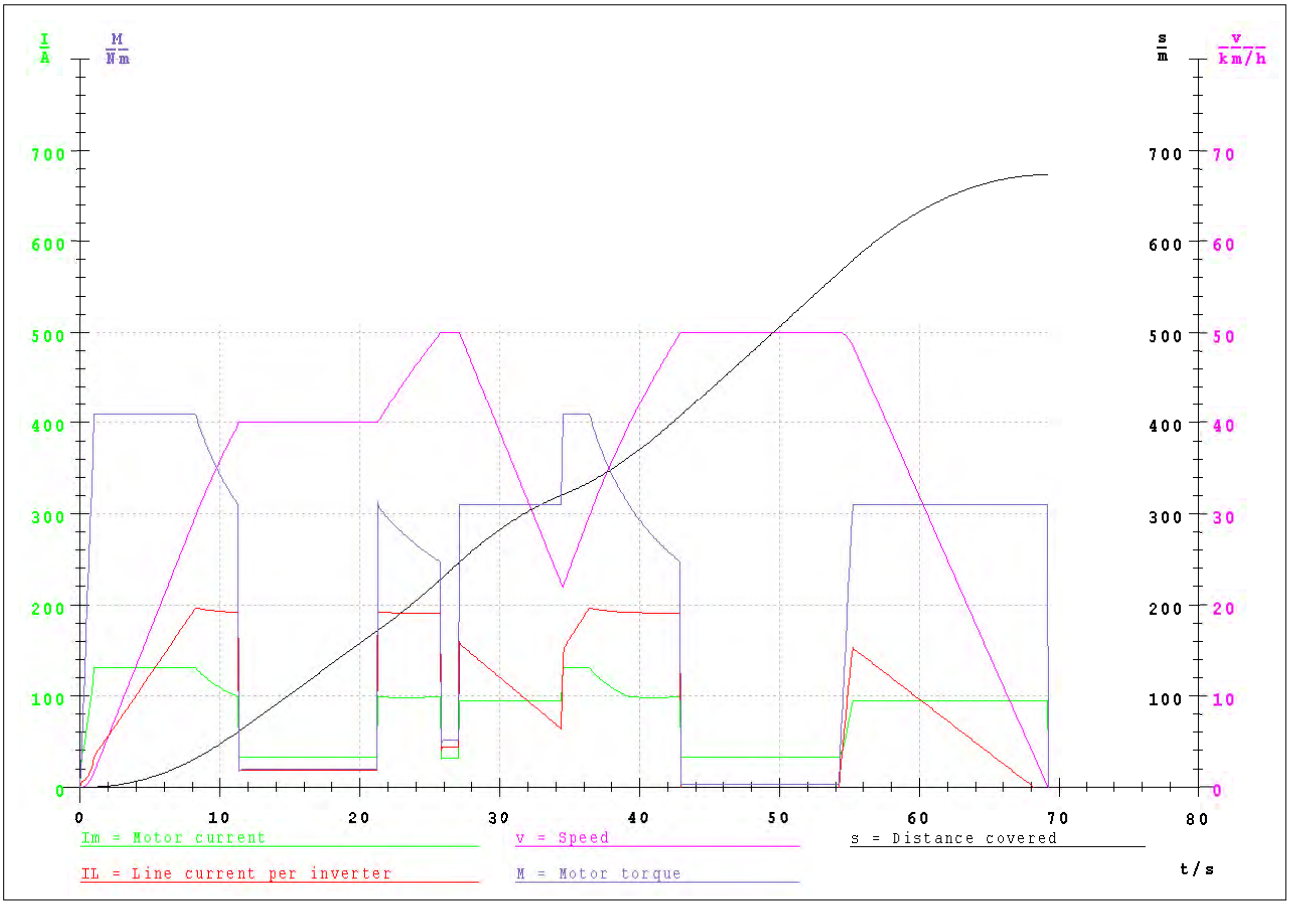

Vossloh KIEPE GmbH
DÜSSELDORF
Abt. E2

09.07.07
09070712

Edinburgh Tram Network

Tram-AIR-OCT AW2
Princes Street-St Andrew Square

Weight of vehicle.....	54.84t
Pay load.....	18.47t
Line voltage Mo/Br.....	750V/ 900V
Distance between stops.....	884.0m
Dwell time.....	25.0s
Wheel diameter.....	590mm
Gear ratio.....	5.440/ 1
Max. acceleration.....	1.08m/s²
Max. deceleration.....	1.13m/s²
Mean deceleration.....	.90m/s²
Adhesion coefficient Mo/Br.....	.15 / .13
RMS line current tot/Mo.....	600A/ 572A
Journey speed.....	27.9km/h
RMS motor current.....	79A
Energy drawn from line.....	7972.7Wh
Dynamic brake energy.....	2920.5Wh
Total energy consumption.....	5052.2Wh

224m/ 0.0%/ 50km/h - 305m/ 1.1%/ 50km/h
82m/ 1.9%/ 10km/h - 123m/ 1.9%/ 50km/h
50m/ 4.1%/ 50km/h - 40m/ 1.3%/ 50km/h
60m/-2.1%/ 50km/h - 0m/-2.1%/ 50km/h

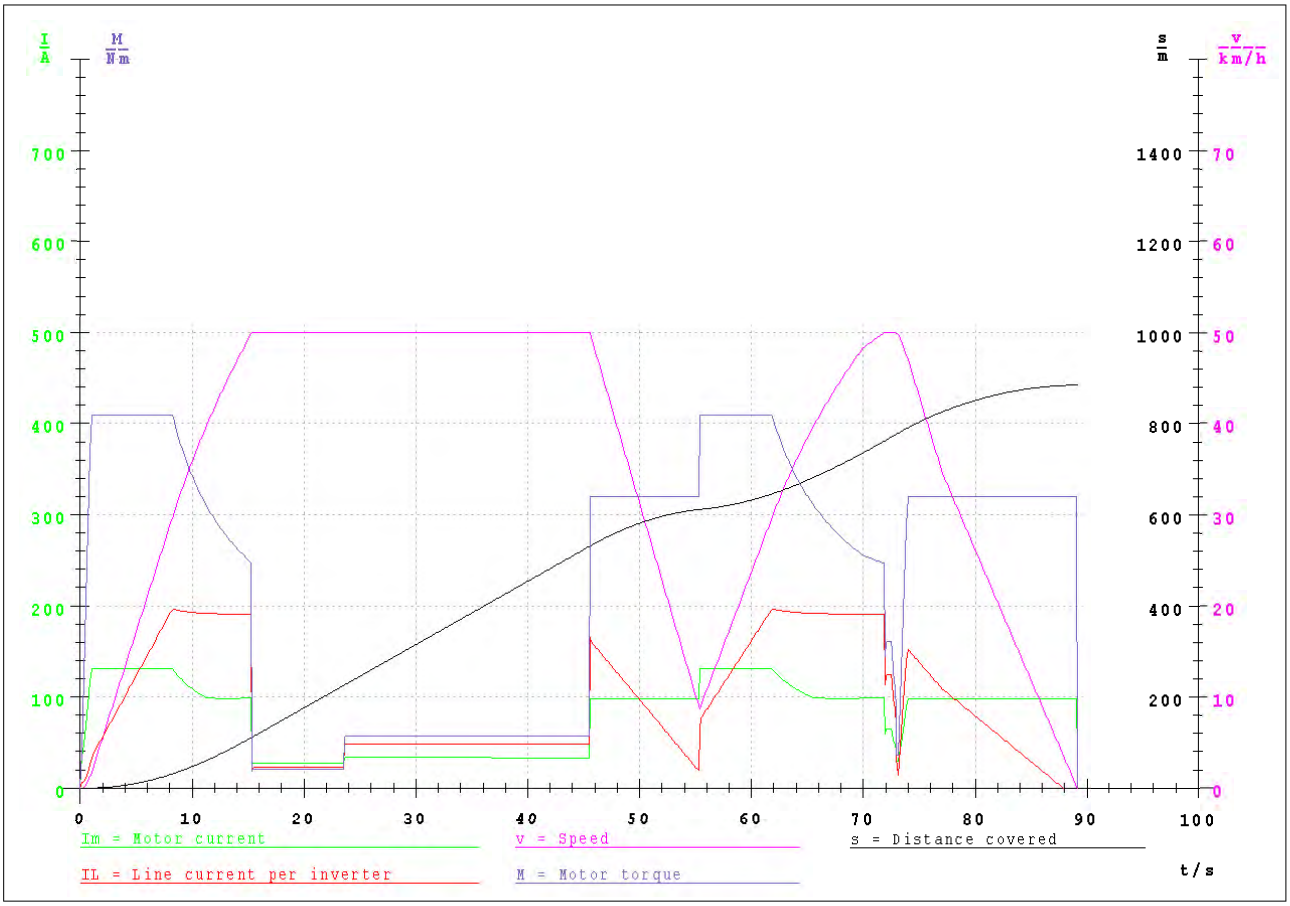

Vossloh KIEPE GmbH
DÜSSELDORF
Abt. E2

09.07.07
09070713

Edinburgh Tram Network

Tram-AIR-OCT AW2
St Andrew Square-Picardy Place

Weight of vehicle.....	54.84t
Pay load.....	18.47t
Line voltage Mo/Br.....	750V/ 900V
Distance between stops.....	530.0m
Dwell time.....	25.0s
Wheel diameter.....	590mm
Gear ratio.....	5.440/ 1
Max. acceleration.....	1.20m/s²
Max. deceleration.....	1.01m/s²
Mean deceleration.....	.90m/s²
Adhesion coefficient Mo/Br.....	.10 / .17
RMS line current tot/Mo.....	397A/ 293A
Journey speed.....	21.0km/h
RMS motor current.....	72A
Energy drawn from line.....	2058.0Wh
Dynamic brake energy.....	3513.1Wh
Total energy consumption.....	-1455.1Wh

30m/-2.1%/ 50km/h - 77m/-5.5%/ 15km/h
73m/-5.5%/ 50km/h - 100m/-2.0%/ 50km/h
210m/-2.8%/ 50km/h - 30m/-4.0%/ 50km/h
10m/-2.6%/ 40km/h - 0m/ 0.0%/ 50km/h

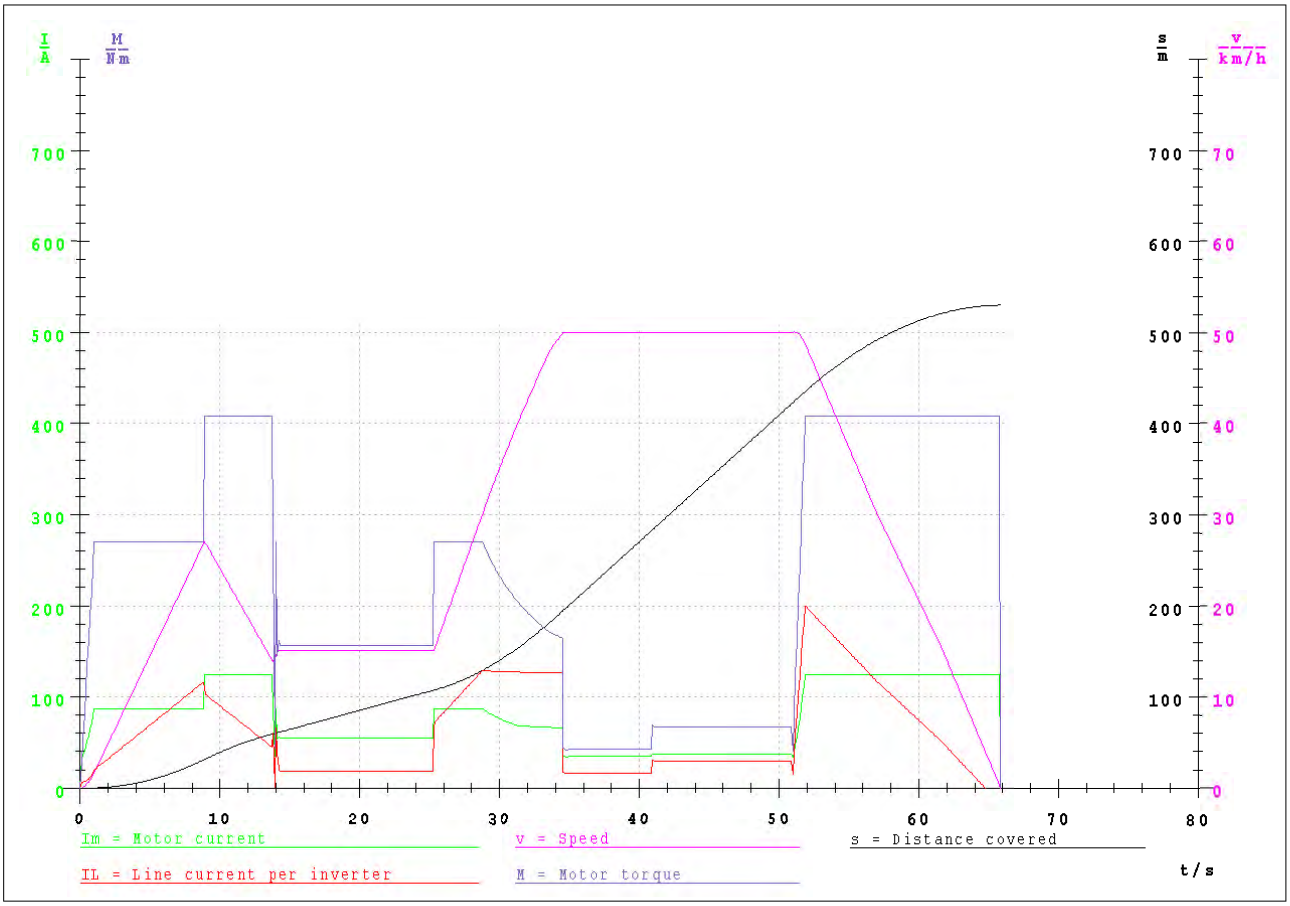

Vossloh KIEPE GmbH
DÜSSELDORF
Abt. E2

09.07.07
09070714

Edinburgh Tram Network

Tram-AIR-OCT AW2
Picardy Place-McDonald Road

Weight of vehicle.....	54.84t
Pay load.....	18.47t
Line voltage Mo/Br.....	750V/ 900V
Distance between stops.....	560.0m
Dwell time.....	25.0s
Wheel diameter.....	590mm
Gear ratio.....	5.440/ 1
Max. acceleration.....	1.20m/s²
Max. deceleration.....	.98m/s²
Mean deceleration.....	.90m/s²
Adhesion coefficient Mo/Br.....	.14 / .16
RMS line current tot/Mo.....	413A/ 322A
Journey speed.....	21.3km/h
RMS motor current.....	67A
Energy drawn from line.....	1886.1Wh
Dynamic brake energy.....	3860.4Wh
Total energy consumption.....	-1974.3Wh

50m/-2.6%/ 20km/h - 40m/-3.2%/ 20km/h
70m/-4.9%/ 20km/h - 160m/-4.3%/ 50km/h
120m/-3.8%/ 50km/h - 120m/-2.8%/ 50km/h

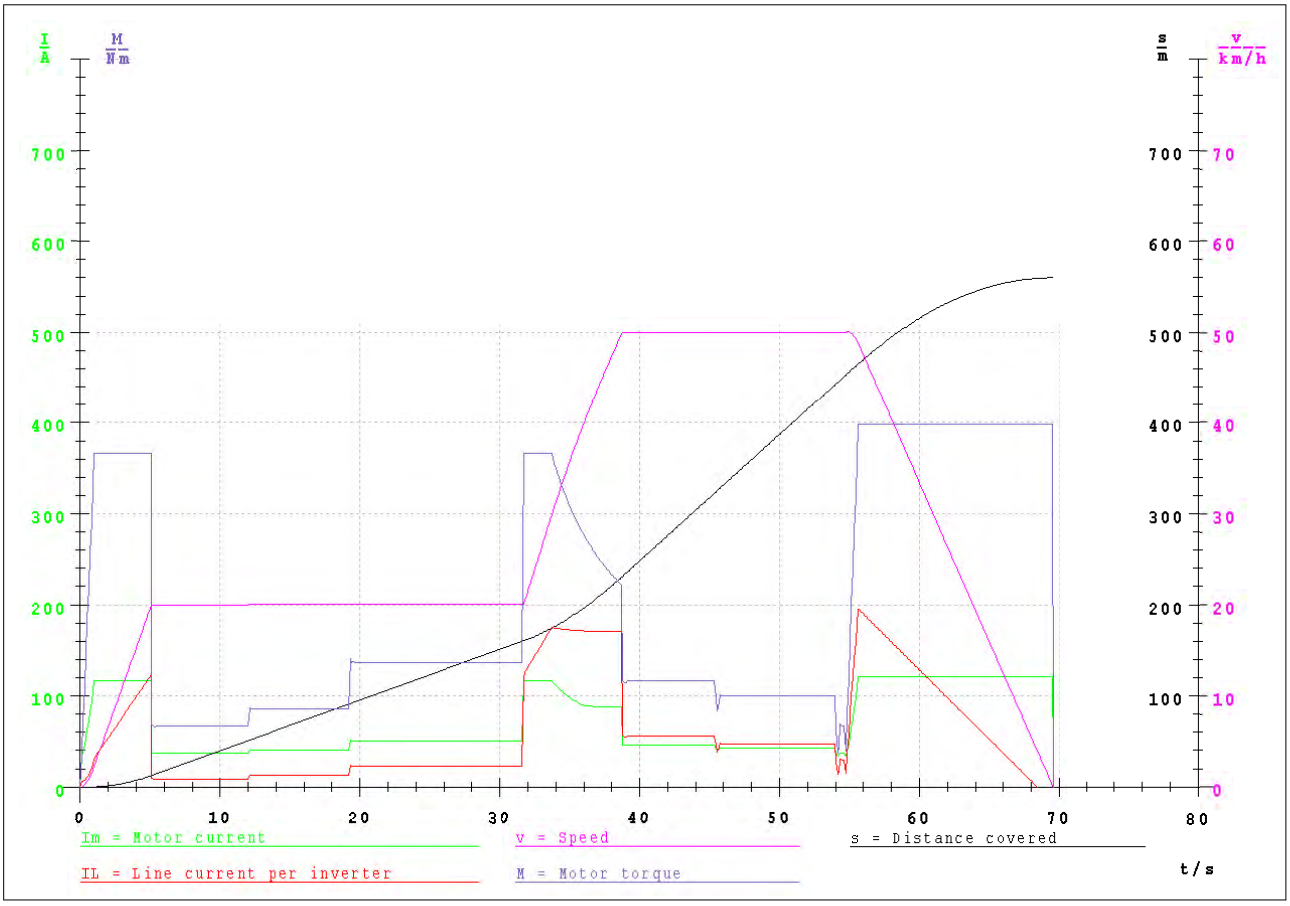

Vossloh KIEPE GmbH
DÜSSELDORF
Abt. E2

09.07.07
09070715

Edinburgh Tram Network

Tram-AIR-OCT AW2
McDonald Road-Balfour Street

Weight of vehicle.....	54.84t
Pay load.....	18.47t
Line voltage Mo/Br.....	750V/ 900V
Distance between stops.....	638.0m
Dwell time.....	25.0s
Wheel diameter.....	590mm
Gear ratio.....	5.440/ 1
Max. acceleration.....	1.20m/s²
Max. deceleration.....	.99m/s²
Mean deceleration.....	.90m/s²
Adhesion coefficient Mo/Br.....	.13 / .16
RMS line current tot/Mo.....	426A/ 386A
Journey speed.....	26.4km/h
RMS motor current.....	66A
Energy drawn from line.....	2186.9Wh
Dynamic brake energy.....	2846.5Wh
Total energy consumption.....	-659.7Wh

50m/-2.8%/ 45km/h - 337m/-2.2%/ 50km/h
200m/-2.2%/ 40km/h - 51m/-2.2%/ 30km/h

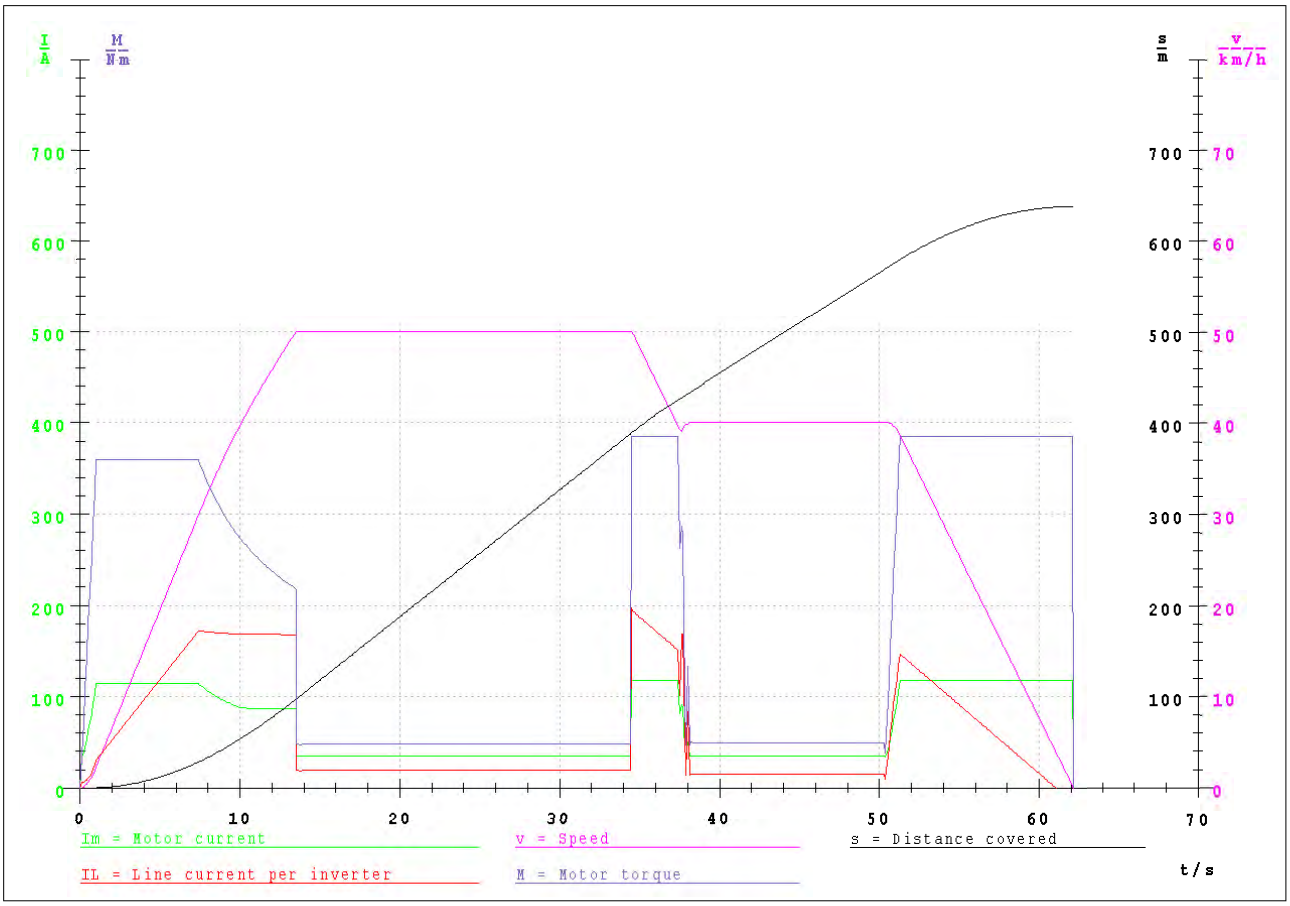

Vossloh KIEPE GmbH
DÜSSELDORF
Abt. E2

09.07.07
09070716

Edinburgh Tram Network

Tram-AIR-OCT AW2
Balfour Street-Foot of the Walk

Weight of vehicle.....	54.84t
Pay load.....	18.47t
Line voltage Mo/Br.....	750V/ 900V
Distance between stops.....	564.0m
Dwell time.....	25.0s
Wheel diameter.....	590mm
Gear ratio.....	5.440/ 1
Max. acceleration.....	1.20m/s²
Max. deceleration.....	.99m/s²
Mean deceleration.....	.90m/s²
Adhesion coefficient Mo/Br.....	.14 / .16
RMS line current tot/Mo.....	455A/ 416A
Journey speed.....	25.1km/h
RMS motor current.....	70A
Energy drawn from line.....	2293.5Wh
Dynamic brake energy.....	2693.6Wh
Total energy consumption.....	-400.0Wh

49m/-2.2%/ 30km/h - 50m/-2.2%/ 40km/h
83m/-2.2%/ 50km/h - 267m/-2.2%/ 50km/h
50m/-2.2%/ 40km/h - 65m/-2.2%/ 30km/h

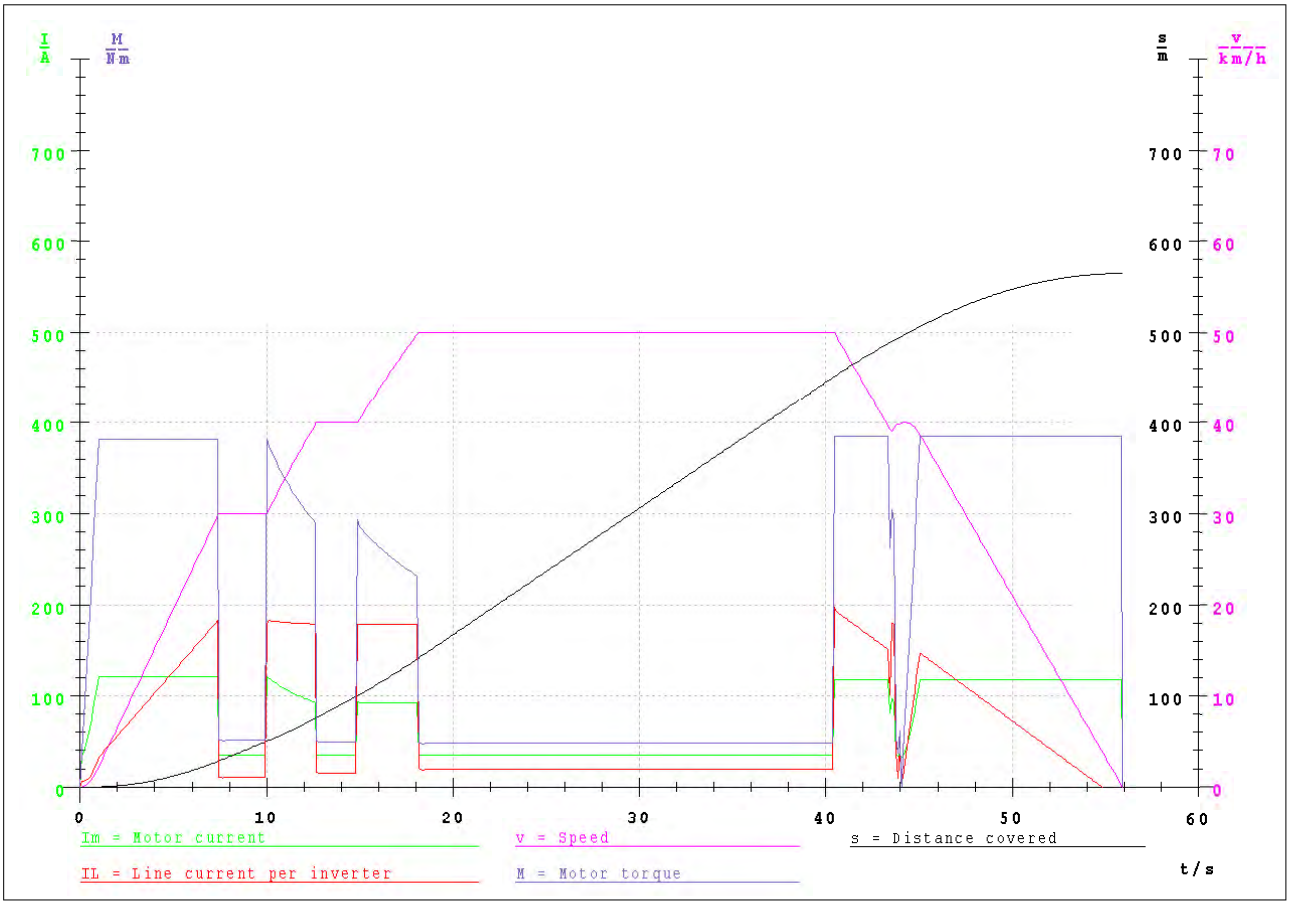

Vossloh KIEPE GmbH
DÜSSELDORF
Abt. E2

09.07.07
09070717

Edinburgh Tram Network

Tram-AIR-OCT AW2
Foot of the Walk-Constitution Street

Weight of vehicle.....	54.84t
Pay load.....	18.47t
Line voltage Mo/Br.....	750V/ 900V
Distance between stops.....	548.0m
Dwell time.....	25.0s
Wheel diameter.....	590mm
Gear ratio.....	5.440/ 1
Max. acceleration.....	1.08m/s²
Max. deceleration.....	1.21m/s²
Mean deceleration.....	.88m/s²
Adhesion coefficient Mo/Br.....	.15 / .17
RMS line current tot/Mo.....	390A/ 320A
Journey speed.....	18.4km/h
RMS motor current.....	67A
Energy drawn from line.....	2578.0Wh
Dynamic brake energy.....	2043.9Wh
Total energy consumption.....	534.1Wh

78m/ -.6%/ 15km/h - 30m/ 1.4%/ 20km/h
47m/ 0.0%/ 30km/h - 60m/-1.1%/ 30km/h
170m/-1.8%/ 30km/h - 100m/ -.8%/ 50km/h
63m/-5.0%/ 40km/h - 0m/ 0.0%/ 50km/h

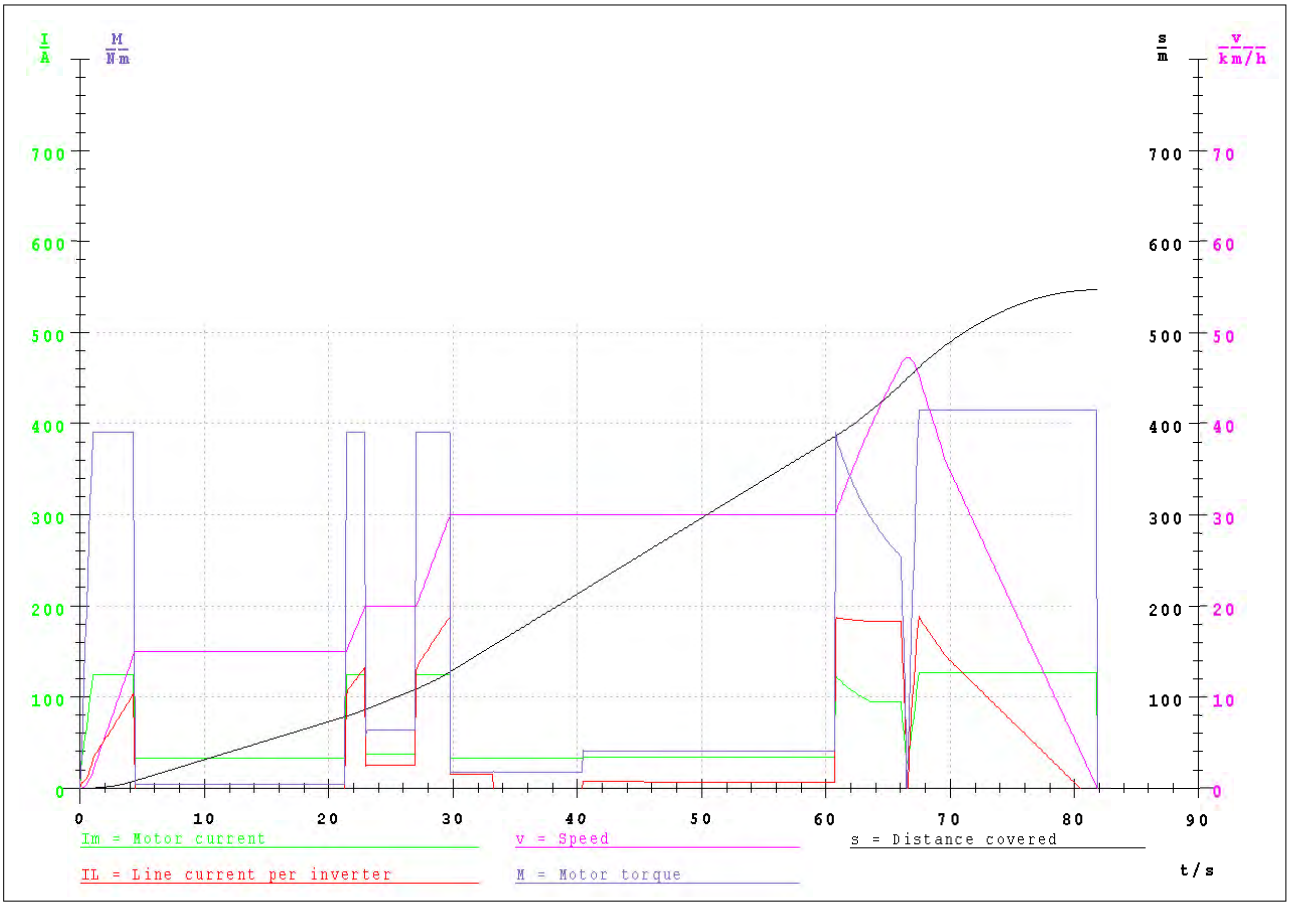

Vossloh KIEPE GmbH
DÜSSELDORF
Abt. E2

09.07.07
09070718

Edinburgh Tram Network

Tram-AIR-OCT AW2
Constitution Street-Ocean Drive

Weight of vehicle.....	54.84t
Pay load.....	18.47t
Line voltage Mo/Br.....	750V/ 900V
Distance between stops.....	483.0m
Dwell time.....	25.0s
Wheel diameter.....	590mm
Gear ratio.....	5.440/ 1
Max. acceleration.....	1.08m/s²
Max. deceleration.....	1.07m/s²
Mean deceleration.....	.90m/s²
Adhesion coefficient Mo/Br.....	.15 / .14
RMS line current tot/Mo.....	441A/ 439A
Journey speed.....	19.4km/h
RMS motor current.....	66A
Energy drawn from line.....	3264.6Wh
Dynamic brake energy.....	1593.6Wh
Total energy consumption.....	1671.0Wh

67m/ 0.0%/ 40km/h - 70m/-1.6%/ 50km/h
50m/ -.8%/ 50km/h - 110m/ 0.0%/ 40km/h
70m/ .9%/ 20km/h - 116m/ 0.0%/ 20km/h

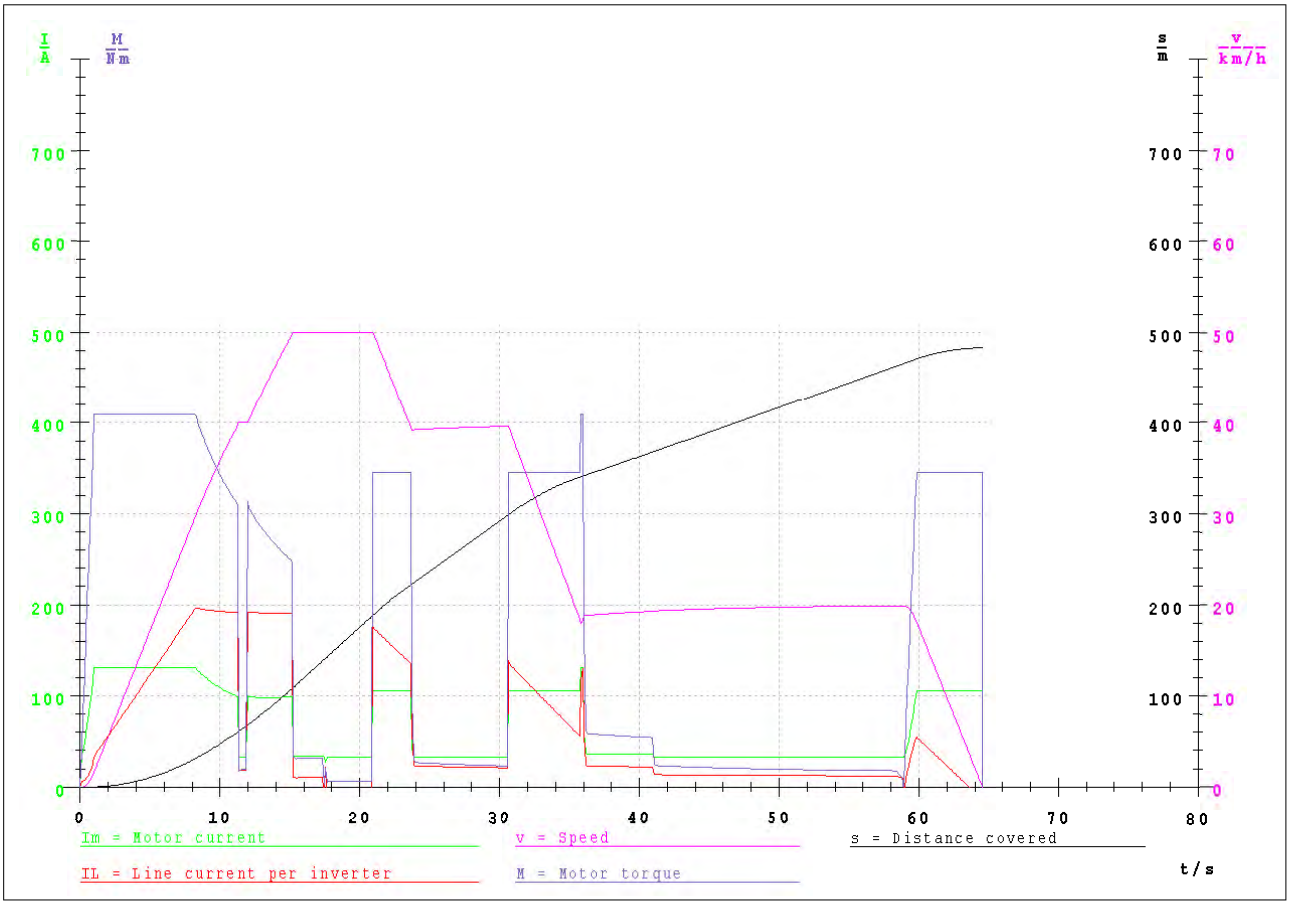

Vossloh KIEPE GmbH
DÜSSELDORF
Abt. E2

09.07.07
09070719

Edinburgh Tram Network

Tram-AIR-OCT AW2
Ocean Drive-Ocean Terminal

Weight of vehicle.....	54.84t
Pay load.....	18.47t
Line voltage Mo/Br.....	750V/ 900V
Distance between stops.....	837.0m
Dwell time.....	25.0s
Wheel diameter.....	590mm
Gear ratio.....	5.440/ 1
Max. acceleration.....	1.08m/s²
Max. deceleration.....	1.14m/s²
Mean deceleration.....	.90m/s²
Adhesion coefficient Mo/Br.....	.15 / .15
RMS line current tot/Mo.....	377A/ 377A
Journey speed.....	19.0km/h
RMS motor current.....	60A
Energy drawn from line.....	5123.2Wh
Dynamic brake energy.....	1935.9Wh
Total energy consumption.....	3187.3Wh

104m/ 0.0%/ 30km/h - 100m/ 0.0%/ 25km/h
80m/ 0.0%/ 50km/h - 30m/ 1.3%/ 50km/h
90m/ 0.0%/ 50km/h - 38m/ 1.3%/ 50km/h
24m/-1.3%/ 40km/h - 88m/ 0.0%/ 40km/h
100m/ 0.0%/ 20km/h - 100m/ 0.0%/ 10km/h
83m/ 0.0%/ 15km/h - 0m/ 0.0%/ 70km/h

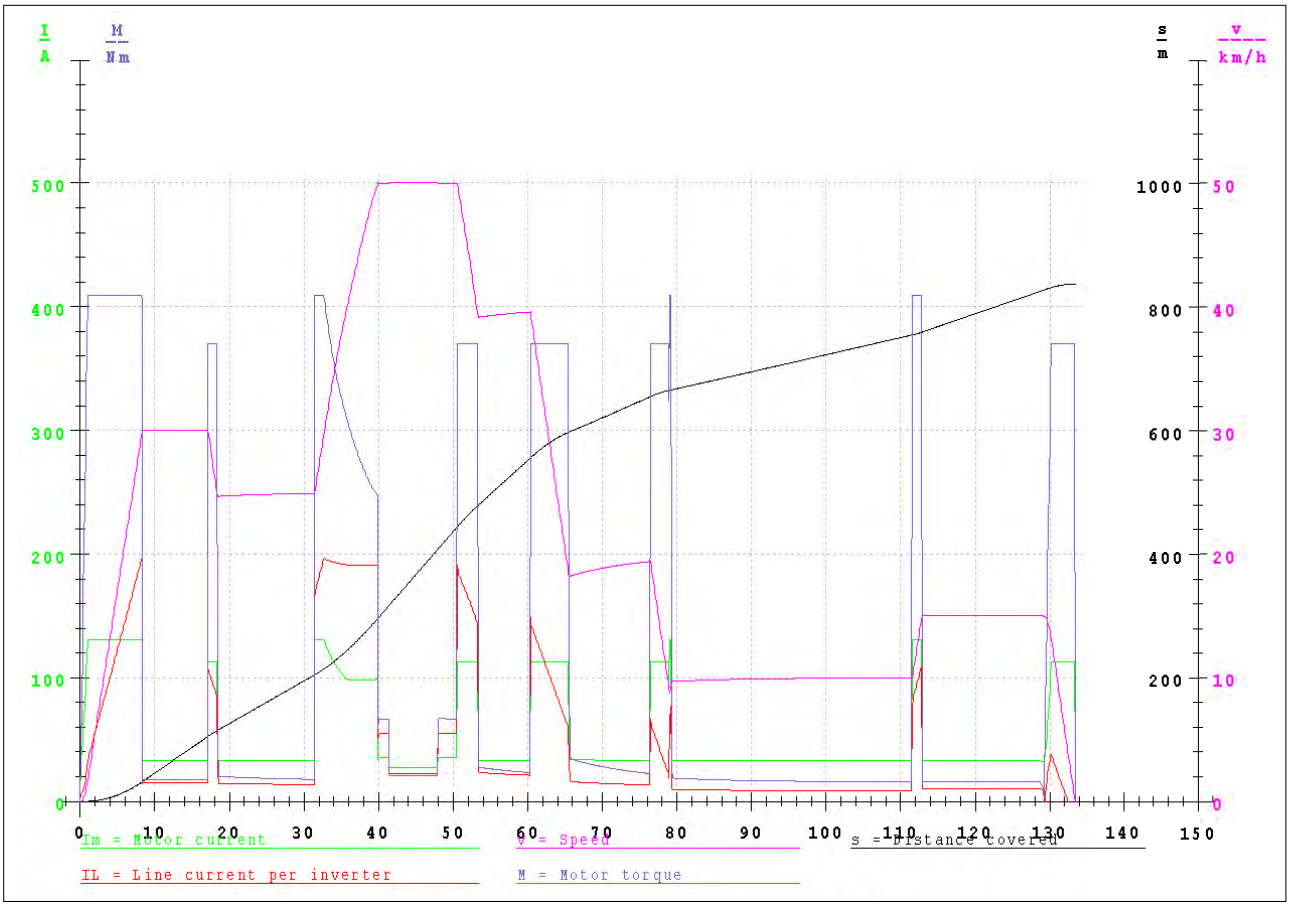

Vossloh KIEPE GmbH
DÜSSELDORF
Abt. E2

12.07.07
12070700

Edinburgh Tram Network

Tram-OCT-AIR AW2
Ocean Terminal-Ocean Drive

Weight of vehicle.....	54.84t
Pay load.....	18.47t
Line voltage Mo/Br.....	750V/ 900V
Distance between stops.....	837.0m
Dwell time.....	25.0s
Wheel diameter.....	590mm
Gear ratio.....	5.440/ 1
Max. acceleration.....	1.08m/s²
Max. deceleration.....	1.01m/s²
Mean deceleration.....	.90m/s²
Adhesion coefficient Mo/Br.....	.15 / .13
RMS line current tot/Mo.....	426A/ 421A
Journey speed.....	20.7km/h
RMS motor current.....	65A
Energy drawn from line.....	5477.0Wh
Dynamic brake energy.....	2426.2Wh
Total energy consumption.....	3050.8Wh

83m/ 0.0%/ 25km/h - 100m/ 0.0%/ 10km/h
100m/ 0.0%/ 40km/h - 88m/ 0.0%/ 35km/h
24m/ 1.3%/ 40km/h - 38m/-1.3%/ 40km/h
90m/ 0.0%/ 40km/h - 30m/-1.3%/ 50km/h
80m/ 0.0%/ 50km/h - 100m/ 0.0%/ 25km/h
104m/ 0.0%/ 30km/h - 0m/ 0.0%/ 70km/h

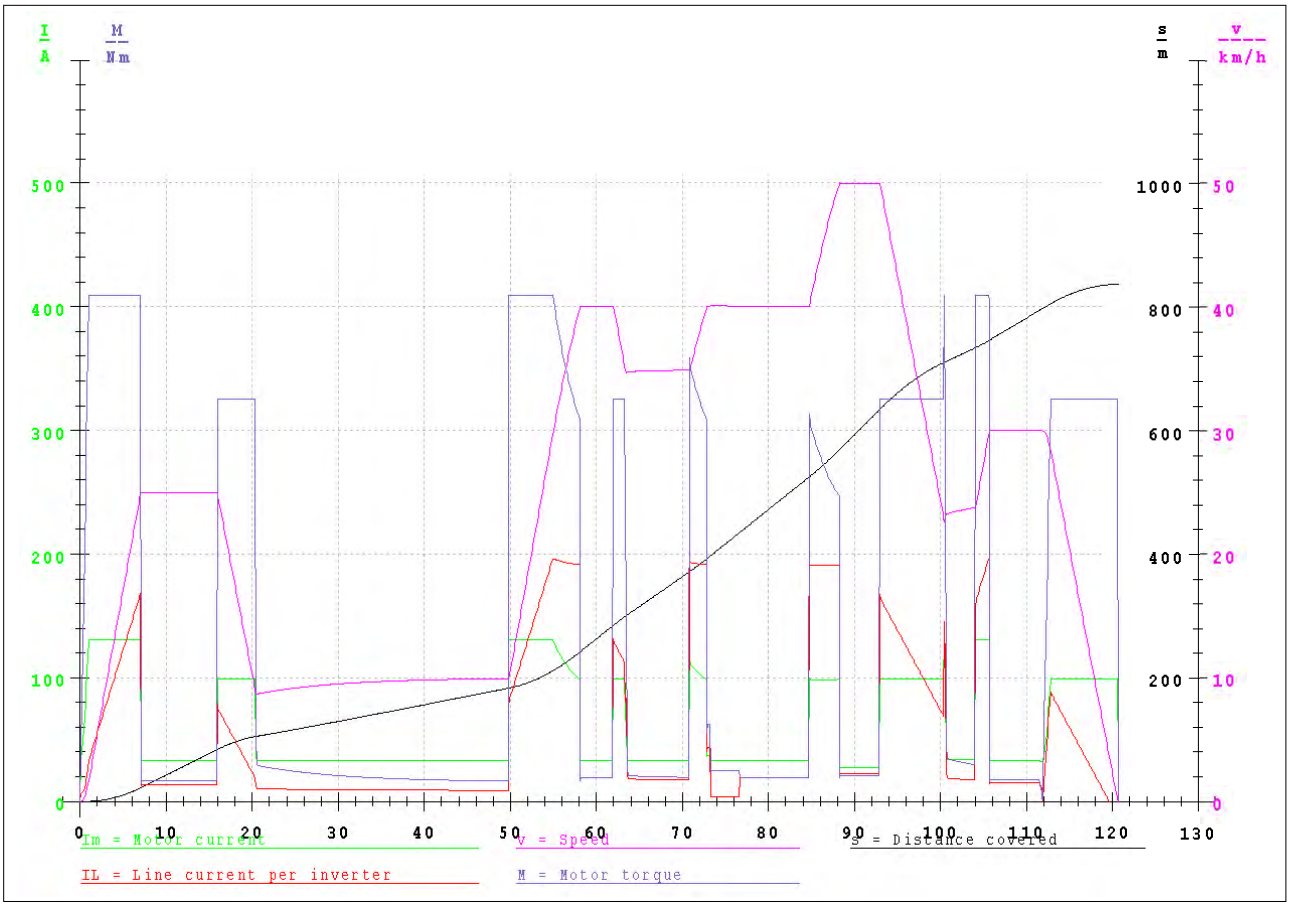

Vossloh KIEPE GmbH
DÜSSELDORF
Abt. E2

12.07.07
12070701

Edinburgh Tram Network

Tram-OCT-AIR AW2
Ocean Drive-Constitution Street

Weight of vehicle.....	54.84t
Pay load.....	18.47t
Line voltage Mo/Br.....	750V/ 900V
Distance between stops.....	483.0m
Dwell time.....	25.0s
Wheel diameter.....	590mm
Gear ratio.....	5.440/ 1
Max. acceleration.....	1.08m/s²
Max. deceleration.....	1.02m/s²
Mean deceleration.....	.90m/s²
Adhesion coefficient Mo/Br.....	.14 / .13
RMS line current tot/Mo.....	292A/ 285A
Journey speed.....	17.7km/h
RMS motor current.....	58A
Energy drawn from line.....	2705.5Wh
Dynamic brake energy.....	807.2Wh
Total energy consumption.....	1898.4Wh

46m/ 0.0%/ 30km/h - 70m/ 0.0%/ 20km/h
70m/ -.9%/ 30km/h - 110m/ 0.0%/ 30km/h
50m/ .8%/ 30km/h - 70m/ 1.6%/ 25km/h
67m/ 0.0%/ 25km/h - 0m/ 0.0%/ 50km/h

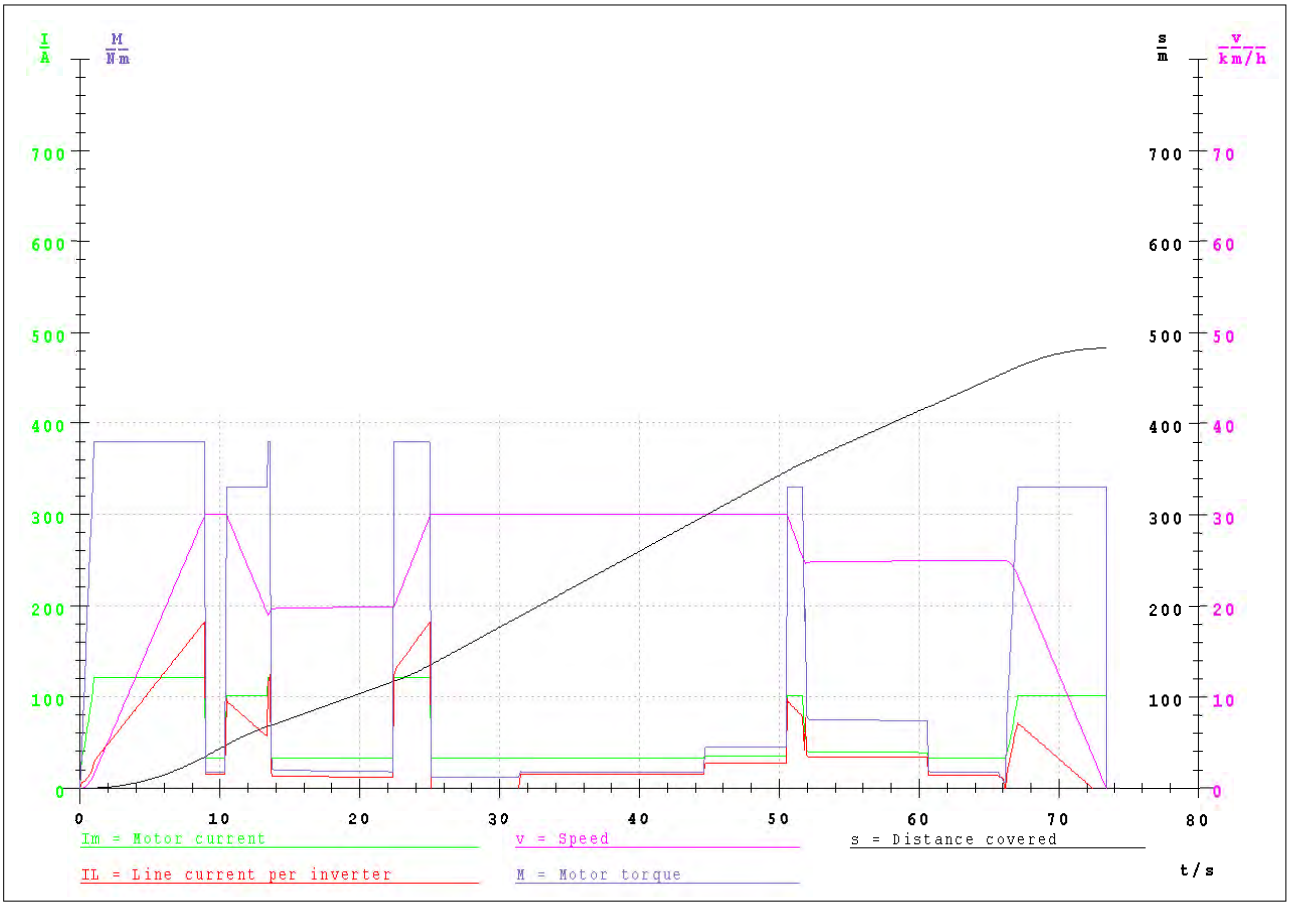

Vossloh KIEPE GmbH
DÜSSELDORF
Abt. E2

12.07.07
12070702

Edinburgh Tram Network

Tram-OCT-AIR AW2
Constitution Street-Foot of the Walk

Weight of vehicle.....	54.84t
Pay load.....	18.47t
Line voltage Mo/Br.....	750V/ 900V
Distance between stops.....	548.0m
Dwell time.....	25.0s
Wheel diameter.....	590mm
Gear ratio.....	5.440/ 1
Max. acceleration.....	1.08m/s²
Max. deceleration.....	1.00m/s²
Mean deceleration.....	.90m/s²
Adhesion coefficient Mo/Br.....	.14 / .12
RMS line current tot/Mo.....	465A/ 458A
Journey speed.....	18.1km/h
RMS motor current.....	72A
Energy drawn from line.....	5750.9Wh
Dynamic brake energy.....	1781.8Wh
Total energy consumption.....	3969.1Wh

13m/ 5.0%/ 30km/h - 50m/ 5.0%/ 25km/h
100m/ .8%/ 50km/h - 170m/ 1.8%/ 30km/h
60m/ 1.1%/ 30km/h - 47m/ 0.0%/ 15km/h
30m/-1.4%/ 15km/h - 78m/ .6%/ 30km/h

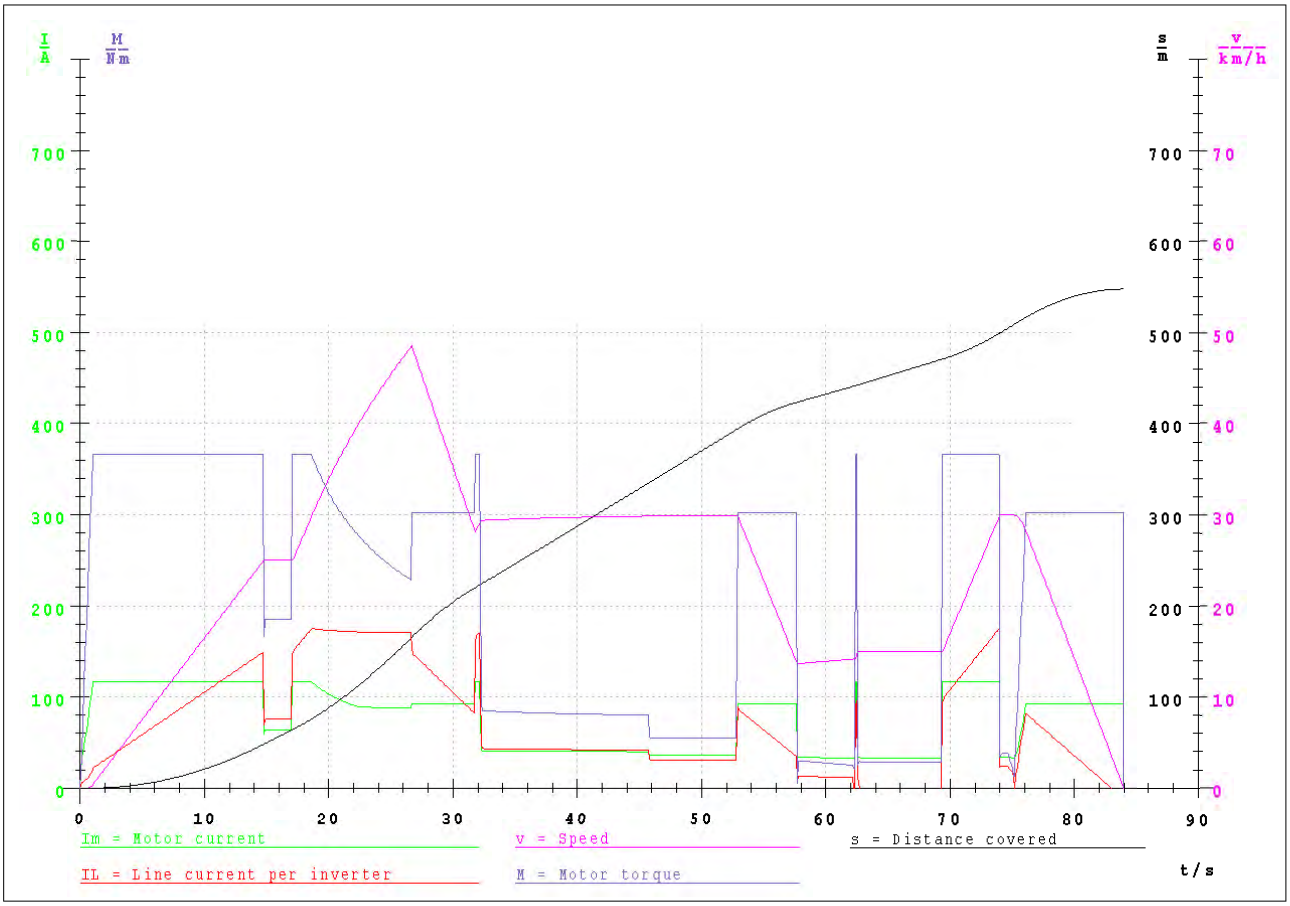

Vossloh KIEPE GmbH
DÜSSELDORF
Abt. E2

12.07.07
12070703

Edinburgh Tram Network

Tram-OCT-AIR AW2
Foot of the Walk-Balfour Street

Weight of vehicle.....	54.84t
Pay load.....	18.47t
Line voltage Mo/Br.....	750V/ 900V
Distance between stops.....	564.0m
Dwell time.....	25.0s
Wheel diameter.....	590mm
Gear ratio.....	5.440/ 1
Max. acceleration.....	.88m/s²
Max. deceleration.....	.98m/s²
Mean deceleration.....	.90m/s²
Adhesion coefficient Mo/Br.....	.15 / .10
RMS line current tot/Mo.....	538A/ 534A
Journey speed.....	23.7km/h
RMS motor current.....	69A
Energy drawn from line.....	5794.6Wh
Dynamic brake energy.....	1262.2Wh
Total energy consumption.....	4532.5Wh

65m/ 2.2%/ 30km/h - 317m/ 2.2%/ 50km/h
83m/ 2.2%/ 40km/h - 99m/ 2.2%/ 30km/h

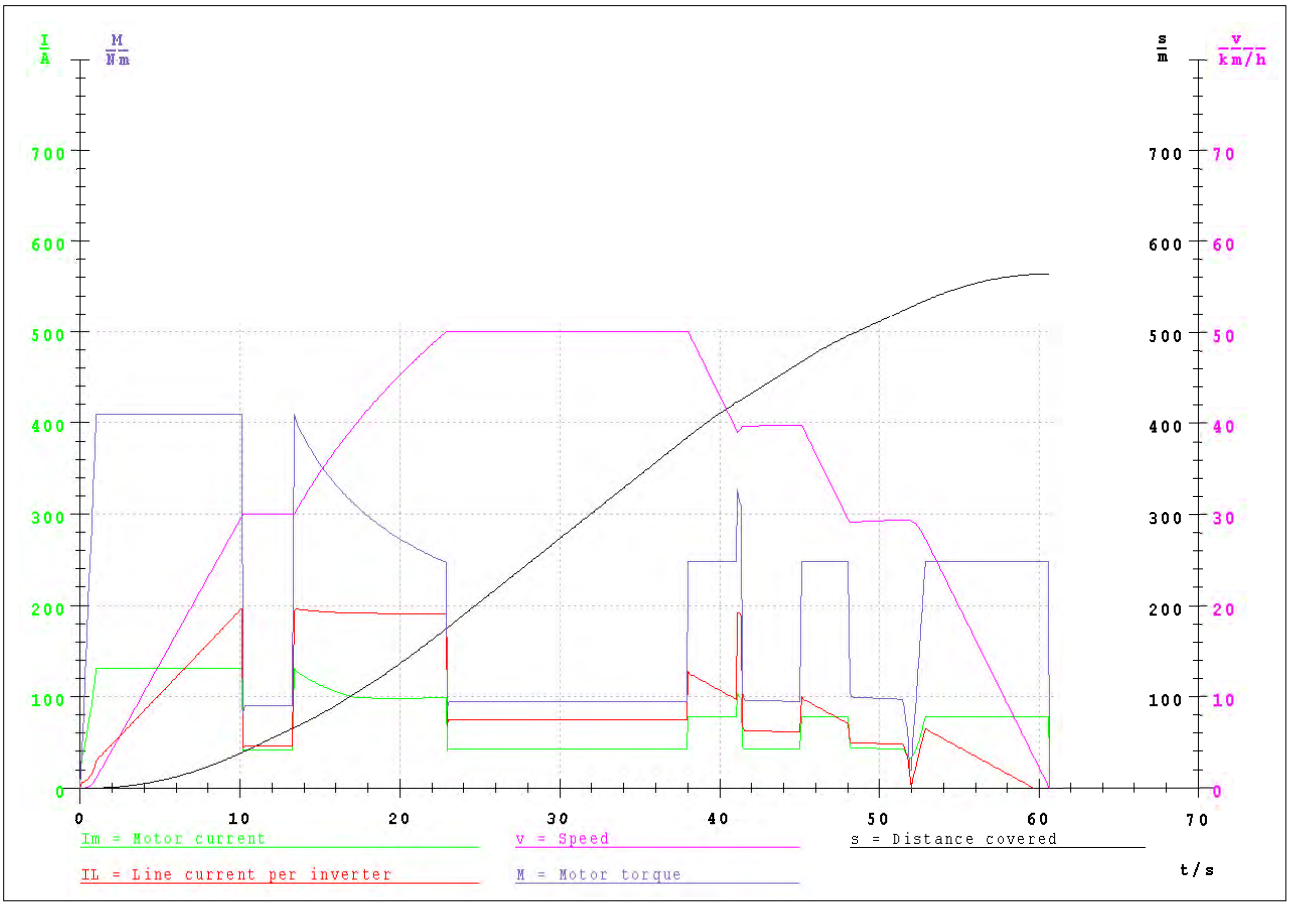

Vossloh KIEPE GmbH
DÜSSELDORF
Abt. E2

12.07.07
12070704

Edinburgh Tram Network

Tram-OCT-AIR AW2
Balfour Street-McDonald Road

Weight of vehicle.....	54.84t
Pay load.....	18.47t
Line voltage Mo/Br.....	750V/ 900V
Distance between stops.....	638.0m
Dwell time.....	25.0s
Wheel diameter.....	590mm
Gear ratio.....	5.440/ 1
Max. acceleration.....	.88m/s²
Max. deceleration.....	.97m/s²
Mean deceleration.....	.90m/s²
Adhesion coefficient Mo/Br.....	.15 / .09
RMS line current tot/Mo.....	524A/ 509A
Journey speed.....	25.3km/h
RMS motor current.....	66A
Energy drawn from line.....	6218.6Wh
Dynamic brake energy.....	1140.7Wh
Total energy consumption.....	5077.9Wh

51m/ 2.2%/ 30km/h - 200m/ 2.2%/ 40km/h
250m/ 2.2%/ 50km/h - 87m/ 2.2%/ 45km/h
50m/ 2.8%/ 40km/h - 0m/ 0.0%/ 15km/h

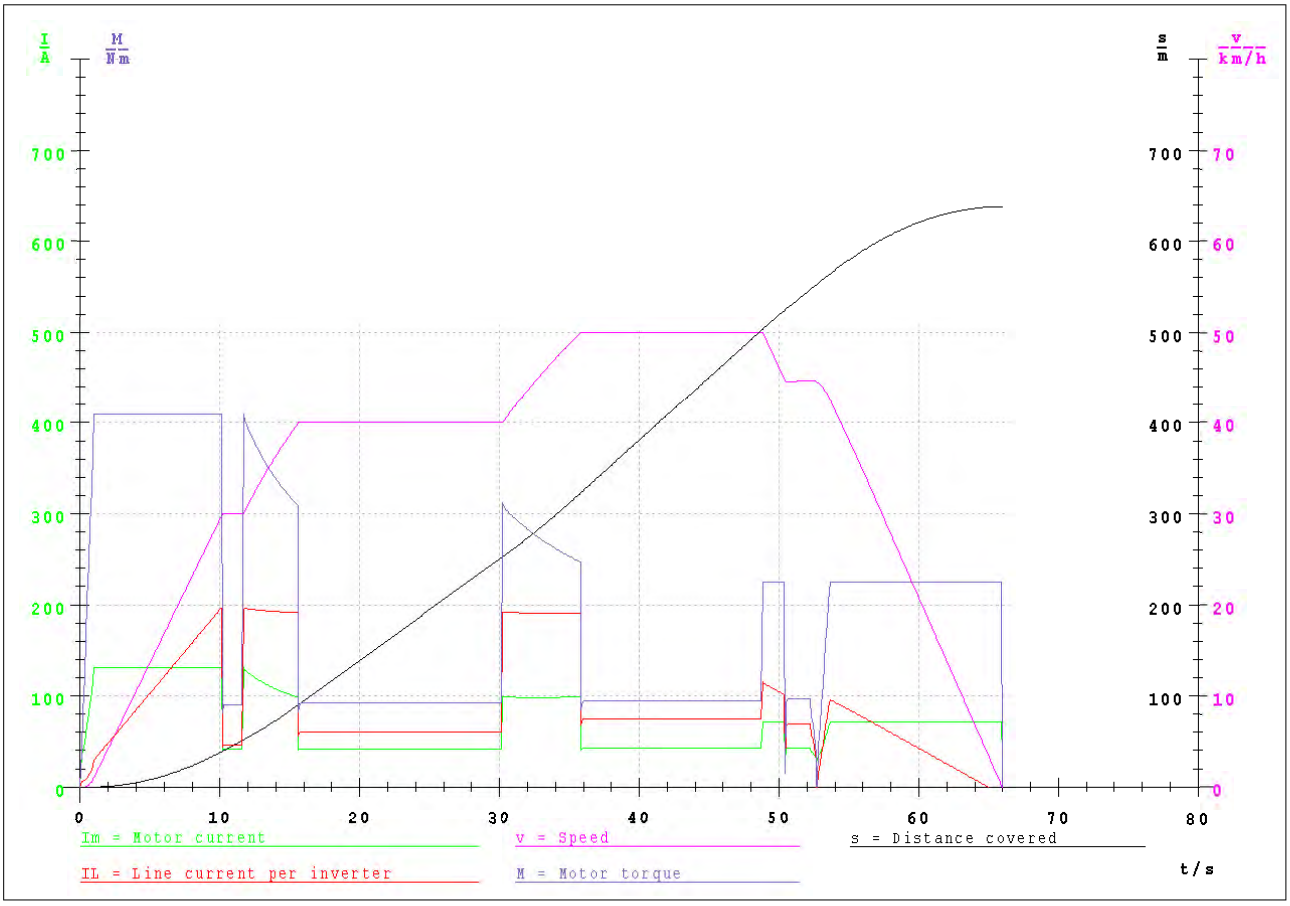

Vossloh KIEPE GmbH
DÜSSELDORF
Abt. E2

12.07.07
12070705

Edinburgh Tram Network

Tram-OCT-AIR AW2
McDonald Road-Picardy Place

Weight of vehicle.....	54.84t
Pay load.....	18.47t
Line voltage Mo/Br.....	750V/ 900V
Distance between stops.....	560.0m
Dwell time.....	25.0s
Wheel diameter.....	590mm
Gear ratio.....	5.440/ 1
Max. acceleration.....	.83m/s²
Max. deceleration.....	.99m/s²
Mean deceleration.....	.90m/s²
Adhesion coefficient Mo/Br.....	.15 / .09
RMS line current tot/Mo.....	631A/ 628A
Journey speed.....	22.7km/h
RMS motor current.....	77A
Energy drawn from line.....	7724.9Wh
Dynamic brake energy.....	1173.4Wh
Total energy consumption.....	6551.5Wh

120m/ 2.8%/ 50km/h - 120m/ 3.8%/ 50km/h
160m/ 4.3%/ 50km/h - 70m/ 4.9%/ 20km/h
40m/ 3.2%/ 20km/h - 50m/ 2.6%/ 50km/h

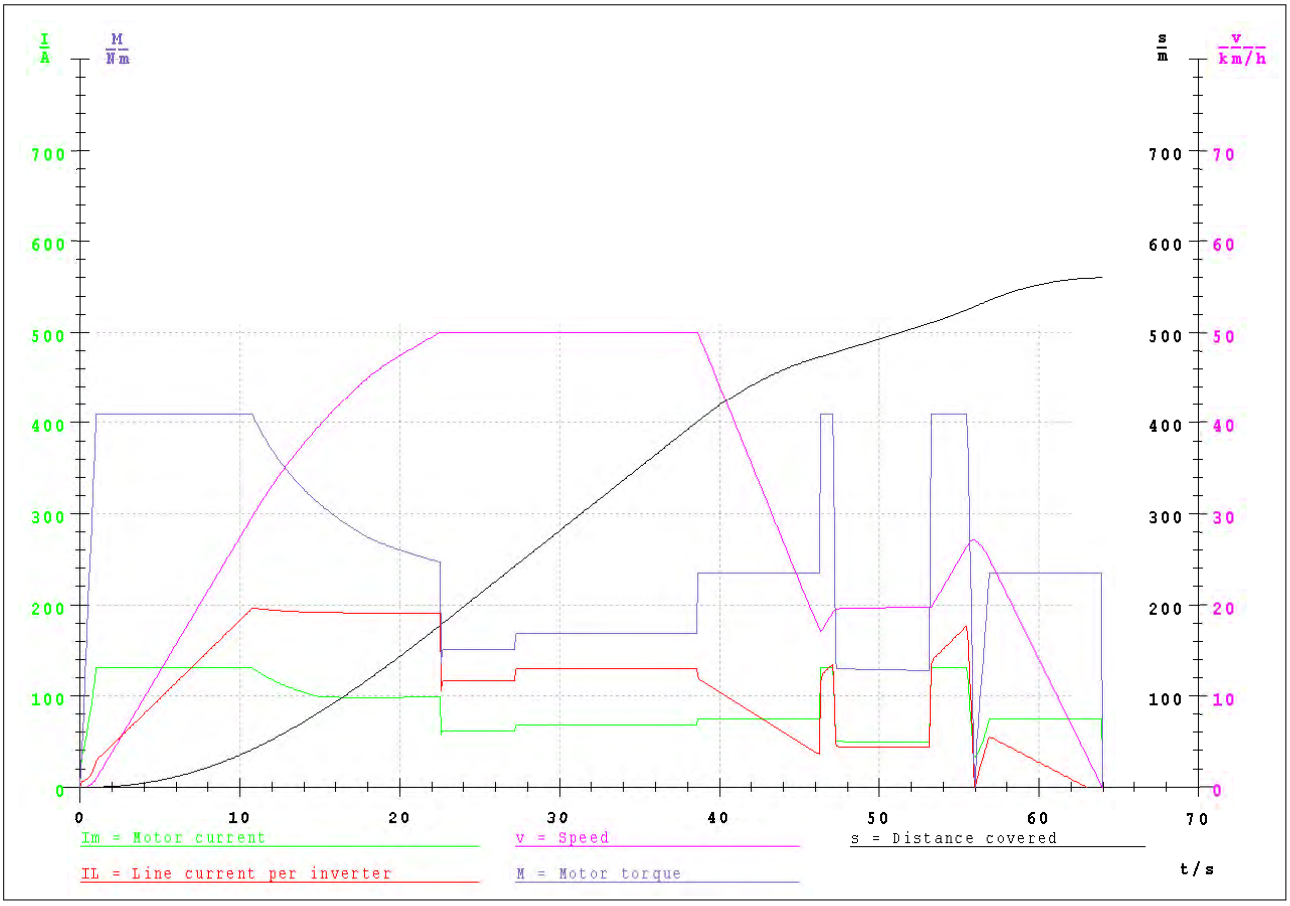

Vossloh KIEPE GmbH
DÜSSELDORF
Abt. E2

12.07.07
12070706

Edinburgh Tram Network

Tram-OCT-AIR AW2
Picardy Place-St Andrew Square

Weight of vehicle.....	54.84t
Pay load.....	18.47t
Line voltage Mo/Br.....	750V/ 900V
Distance between stops.....	696.0m
Dwell time.....	25.0s
Wheel diameter.....	590mm
Gear ratio.....	5.440/ 1
Max. acceleration.....	1.08m/s²
Max. deceleration.....	.97m/s²
Mean deceleration.....	.90m/s²
Adhesion coefficient Mo/Br.....	.16 / .09
RMS line current tot/Mo.....	619A/ 611A
Journey speed.....	21.7km/h
RMS motor current.....	78A
Energy drawn from line.....	8742.0Wh
Dynamic brake energy.....	2291.2Wh
Total energy consumption.....	6450.9Wh

10m/ 2.6%/ 50km/h - 30m/ 4.0%/ 50km/h
210m/ 2.8%/ 50km/h - 50m/ 2.0%/ 50km/h
190m/ 0.0%/ 15km/h - 30m/ 3.9%/ 50km/h
70m/ 6.4%/ 50km/h - 40m/ 3.3%/ 50km/h
66m/ 2.3%/ 50km/h - 0m/ 0.0%/ 50km/h

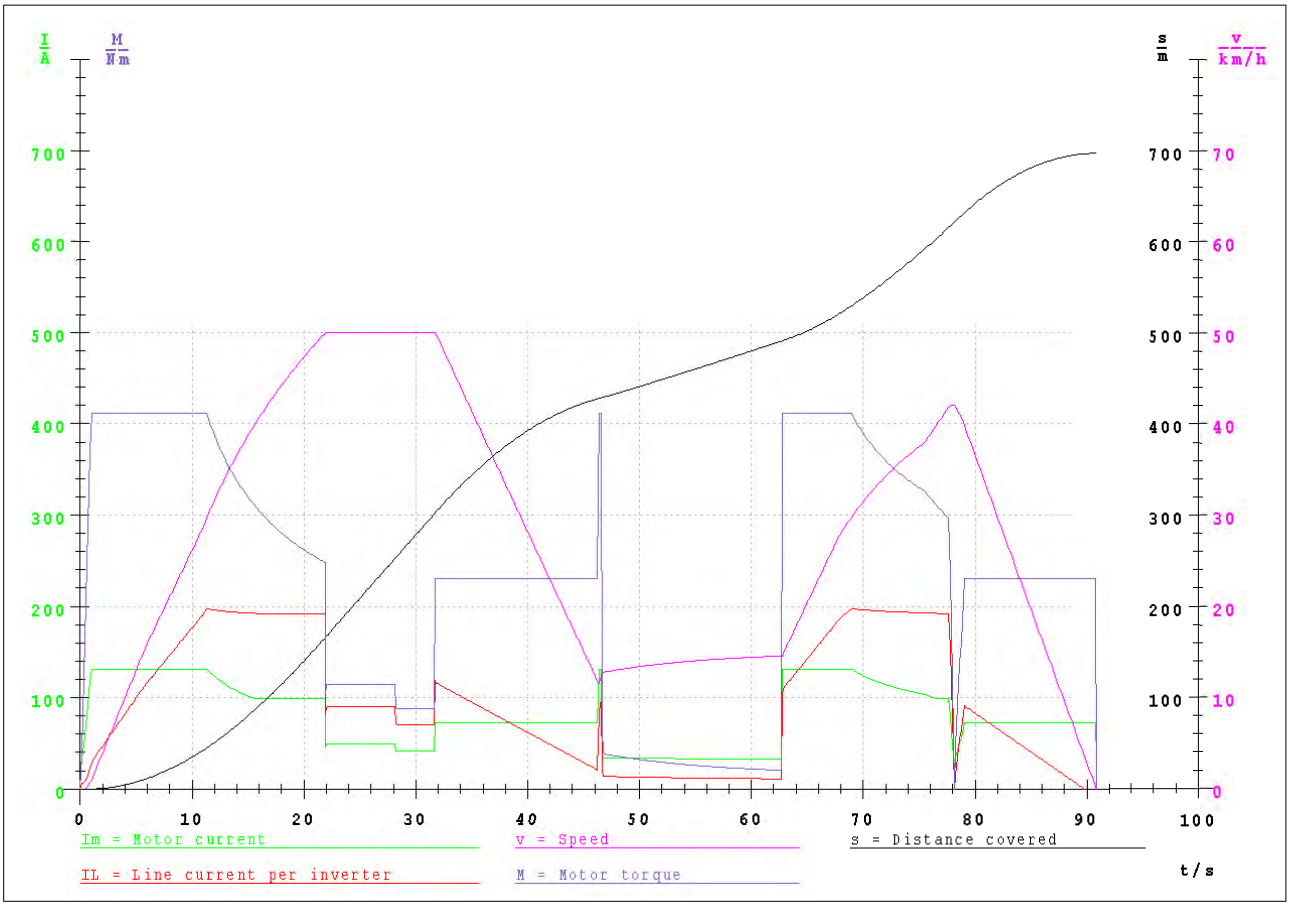

Vossloh KIEPE GmbH
DÜSSELDORF
Abt. E2

12.07.07
12070707

Edinburgh Tram Network

Tram-OCT-AIR AW2
St Andrew Square-Princes Street

Weight of vehicle.....	54.84t
Pay load.....	18.47t
Line voltage Mo/Br.....	750V/ 900V
Distance between stops.....	718.0m
Dwell time.....	25.0s
Wheel diameter.....	590mm
Gear ratio.....	5.440/ 1
Max. acceleration.....	1.20m/s²
Max. deceleration.....	.97m/s²
Mean deceleration.....	.90m/s²
Adhesion coefficient Mo/Br.....	.10 / .13
RMS line current tot/Mo.....	325A/ 268A
Journey speed.....	22.9km/h
RMS motor current.....	60A
Energy drawn from line.....	2870.9Wh
Dynamic brake energy.....	2106.3Wh
Total energy consumption.....	764.6Wh

14m/ 2.3%/ 50km/h - 10m/ 0.0%/ 50km/h
60m/-5.7%/ 10km/h - 40m/-3.1%/ 50km/h
370m/-1.1%/ 50km/h - 224m/ 0.0%/ 50km/h

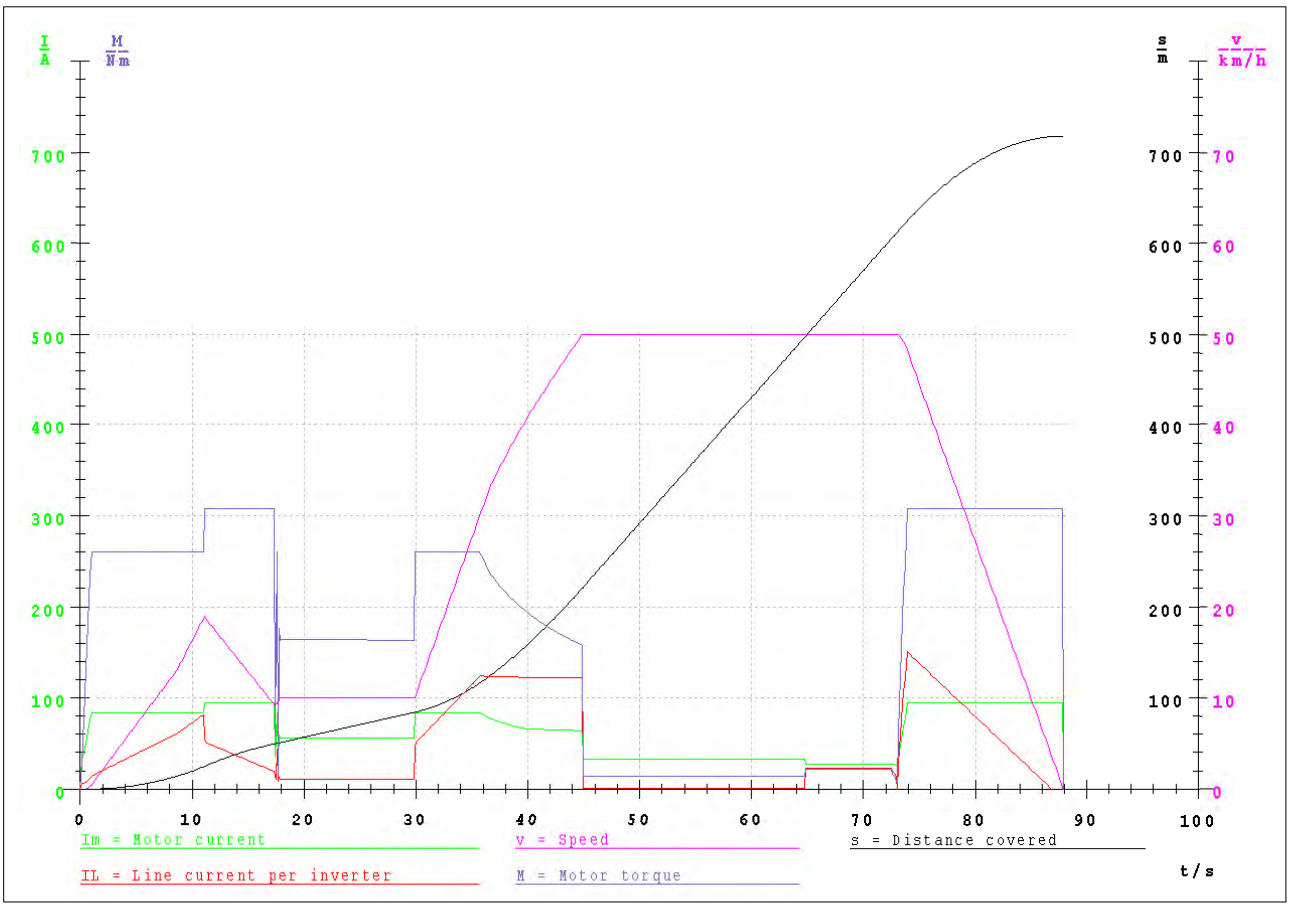

Vossloh KIEPE GmbH
DÜSSELDORF
Abt. E2

12.07.07
12070708

Edinburgh Tram Network

Tram-OCT-AIR AW2
Princes Street-Shandwick Place

Weight of vehicle.....	54.84t
Pay load.....	18.47t
Line voltage Mo/Br.....	750V/ 900V
Distance between stops.....	673.0m
Dwell time.....	25.0s
Wheel diameter.....	590mm
Gear ratio.....	5.440/ 1
Max. acceleration.....	1.08m/s²
Max. deceleration.....	.99m/s²
Mean deceleration.....	.90m/s²
Adhesion coefficient Mo/Br.....	.15 / .13
RMS line current tot/Mo.....	598A/ 582A
Journey speed.....	25.9km/h
RMS motor current.....	76A
Energy drawn from line.....	5587.7Wh
Dynamic brake energy.....	3030.4Wh
Total energy consumption.....	2557.3Wh

93m/ 0.0%/ 50km/h - 205m/ .7%/ 50km/h
91m/ -.9%/ 25km/h - 114m/ -.9%/ 50km/h
170m/ 0.0%/ 40km/h - 0m/ 0.0%/ 50km/h

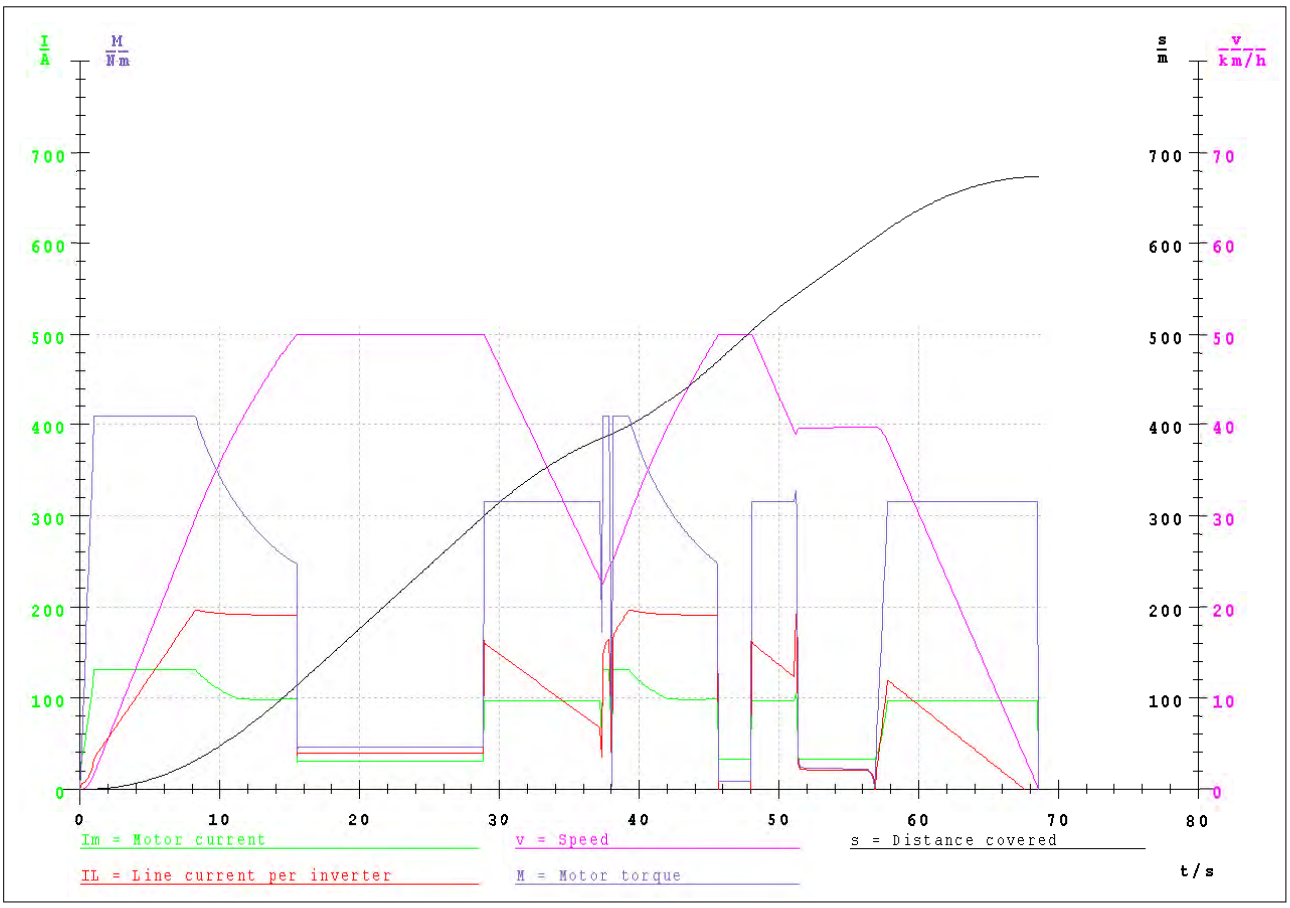

Vossloh KIEPE GmbH
DÜSSELDORF
Abt. E2

12.07.07
12070709

Edinburgh Tram Network

Tram-OCT-AIR AW2
Shandwick Place-Haymarket

Weight of vehicle.....	54.84t
Pay load.....	18.47t
Line voltage Mo/Br.....	750V/ 900V
Distance between stops.....	594.0m
Dwell time.....	25.0s
Wheel diameter.....	590mm
Gear ratio.....	5.440/ 1
Max. acceleration.....	1.08m/s²
Max. deceleration.....	1.09m/s²
Mean deceleration.....	.90m/s²
Adhesion coefficient Mo/Br.....	.13 / .16
RMS line current tot/Mo.....	416A/ 413A
Journey speed.....	21.5km/h
RMS motor current.....	65A
Energy drawn from line.....	2608.8Wh
Dynamic brake energy.....	2049.0Wh
Total energy consumption.....	559.8Wh

66m/-1.0%/ 40km/h - 144m/-1.0%/ 50km/h
80m/-1.1%/ 50km/h - 76m/-1.7%/ 40km/h
50m/-1.7%/ 30km/h - 100m/-1.7%/ 20km/h
78m/-1.5%/ 20km/h - 0m/ 0.0%/ 0km/h

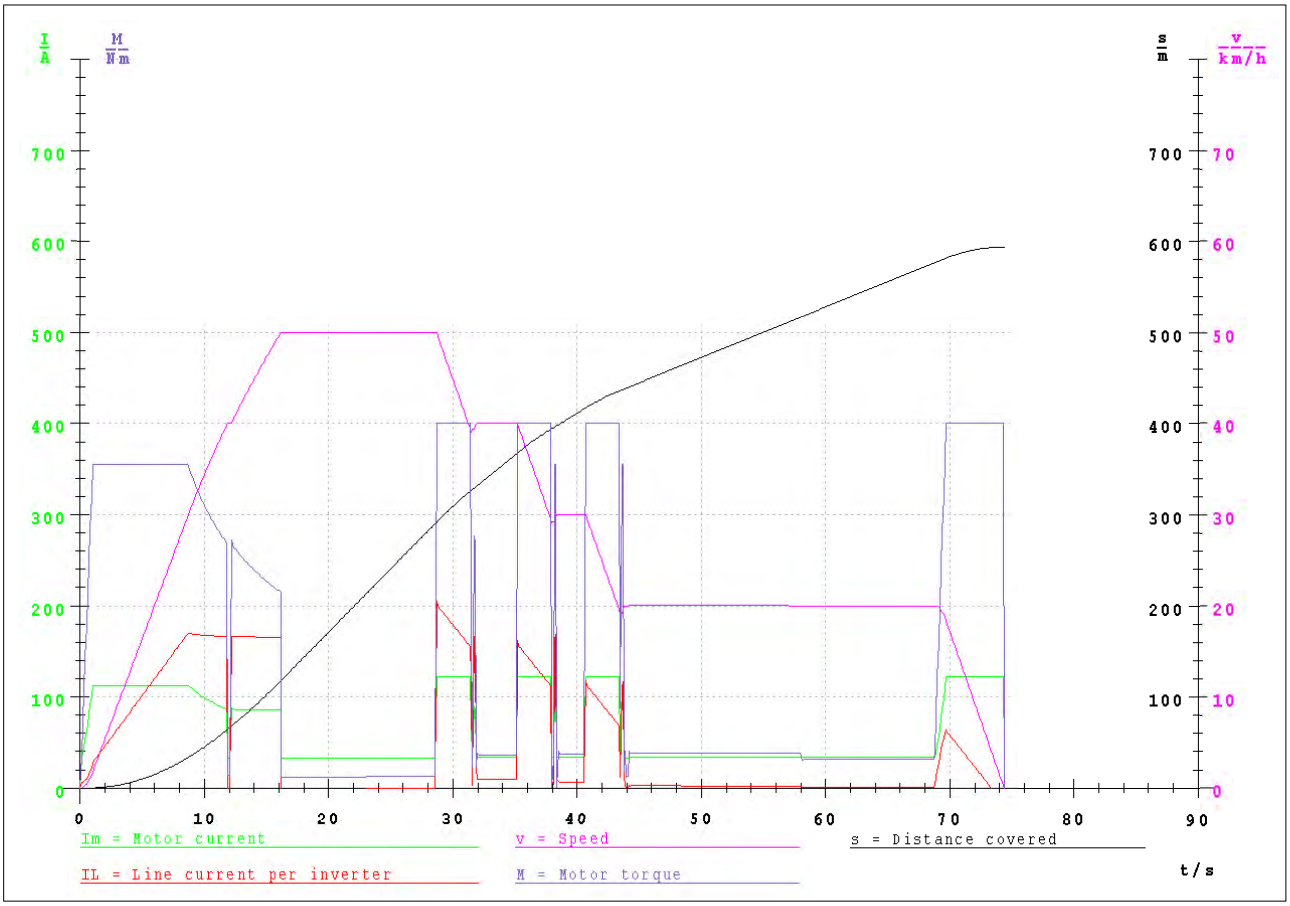

Vossloh KIEPE GmbH
DÜSSELDORF
Abt. E2

12.07.07
12070710

Edinburgh Tram Network

Tram-OCT-AIR AW2
Haymarket-Murrayfield ROJ included

Weight of vehicle..... 54.84t
Pay load..... 18.47t
Line voltage Mo/Br..... 750V/ 900V
Distance between stops..... 1221.0m
Dwell time..... 25.0s
Wheel diameter..... 590mm
Gear ratio..... 5.440/ 1
Max. acceleration..... 1.20m/s²
Max. deceleration..... .99m/s²
Mean deceleration..... .90m/s²
Adhesion coefficient Mo/Br..... .12 / .13
RMS line current tot/Mo..... 379A/ 371A
Journey speed..... 22.9km/h
RMS motor current..... 58A
Energy drawn from line..... 6221.7Wh
Dynamic brake energy..... 3524.8Wh
Total energy consumption..... 2696.9Wh
52m/ -.9%/ 10km/h - 100m/-3.8%/ 15km/h
300m/ 0.0%/ 50km/h - 100m/ -.6%/ 30km/h
120m/ 0.0%/ 20km/h - 61m/ 0.0%/ 70km/h
40m/-4.0%/ 37km/h - 249m/ 0.0%/ 37km/h
100m/ 0.0%/ 25km/h - 99m/ 0.0%/ 35km/h

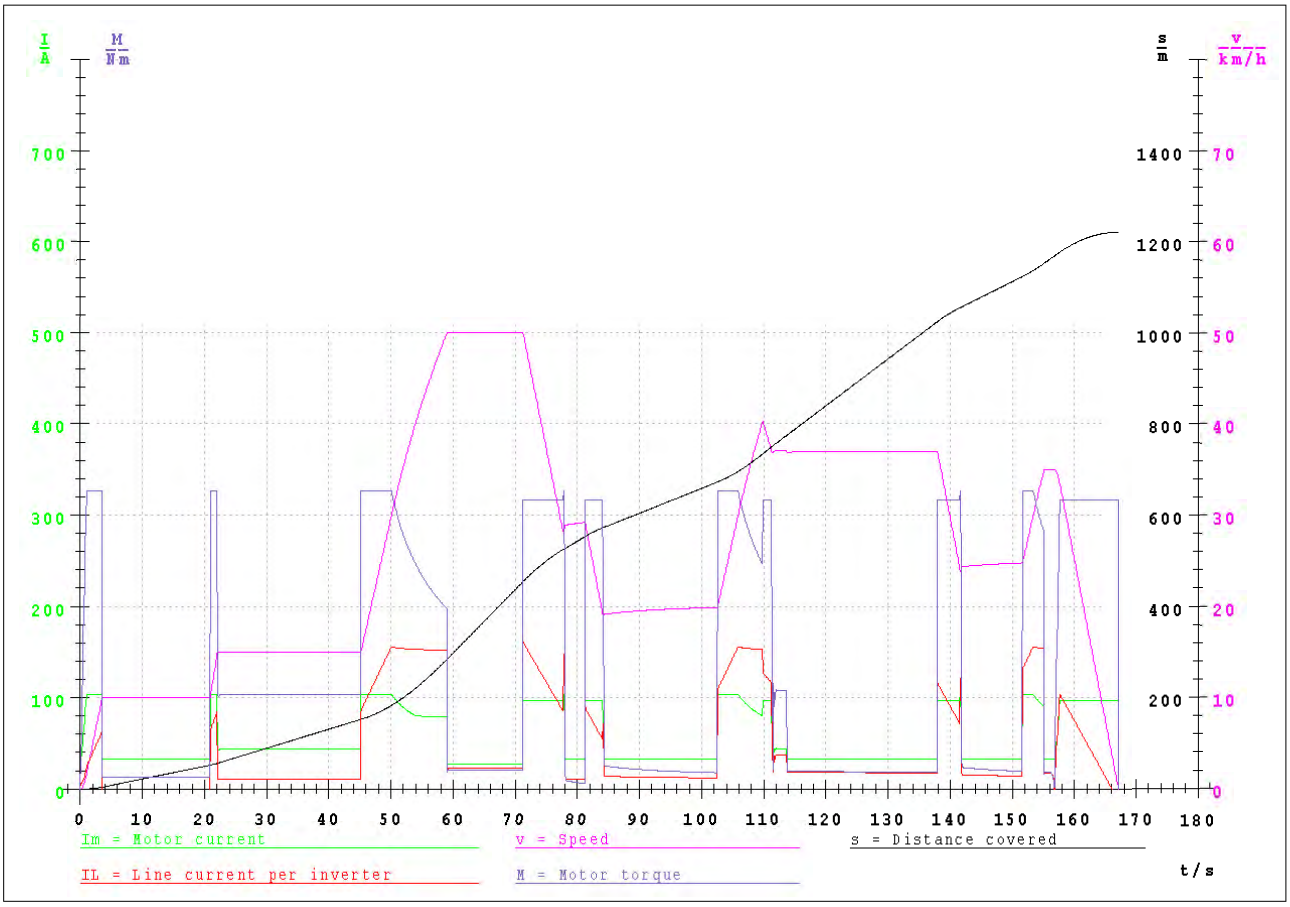

Vossloh KIEPE GmbH
DÜSSELDORF
Abt. E2

12.07.07
12070711

Edinburgh Tram Network

Tram-OCT-AIR AW2
Murrayfield-Balgreen Road

Weight of vehicle..... 54.84t
Pay load..... 18.47t
Line voltage Mo/Br..... 750V/ 900V
Distance between stops..... 1057.0m
Dwell time..... 25.0s
Wheel diameter..... 590mm
Gear ratio..... 5.440/ 1
Max. acceleration..... 1.08m/s²
Max. deceleration..... .95m/s²
Mean deceleration..... .90m/s²
Adhesion coefficient Mo/Br..... .15 / .12
RMS line current tot/Mo..... 624A/ 540A
Journey speed..... 34.8km/h
RMS motor current..... 72A
Energy drawn from line..... 7011.3Wh
Dynamic brake energy..... 3388.7Wh
Total energy consumption..... 3622.7Wh
22m/ 0.0%/ 35km/h - 70m/ 4.0%/ 45km/h
80m/-2.9%/ 45km/h - 179m/ 0.0%/ 45km/h
706m/ 0.0%/ 70km/h - 0m/ 0.0%/ 70km/h

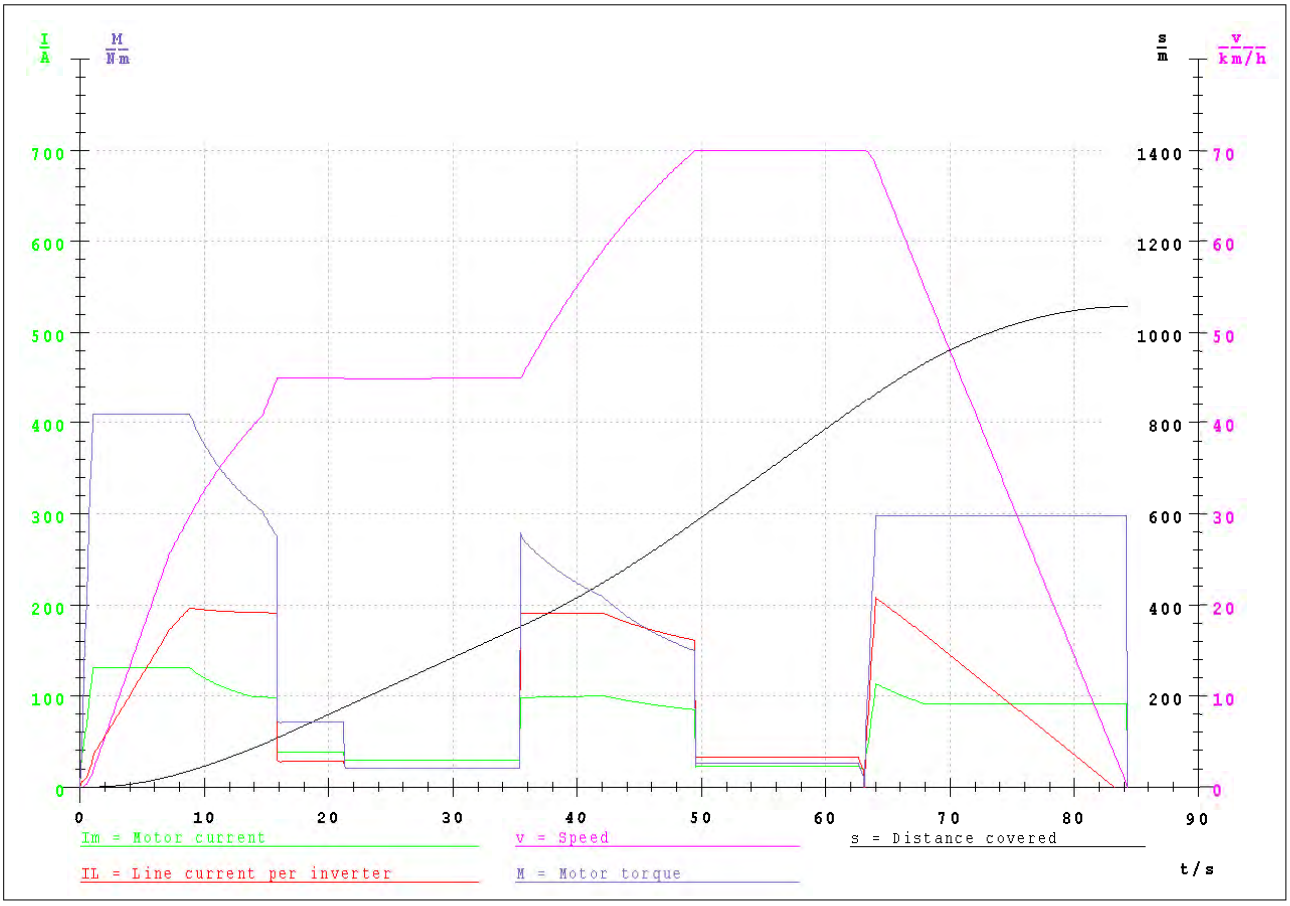

Vossloh KIEPE GmbH
DÜSSELDORF
Abt. E2

12.07.07
12070712

Edinburgh Tram Network

Tram-OCT-AIR AW2
Balgreen Road-Saughton Road North

```
Weight of vehicle..............  54.84t
Pay load.......................  18.47t
Line voltage Mo/Br.............  750V/ 900V
Distance between stops......... 1642.0m
Dwell time.....................  25.0s
Wheel diameter.................  590mm
Gear ratio.....................  5.440/ 1
Max. acceleration..............  1.20m/s²
Max. deceleration..............  1.31m/s²
Mean deceleration..............   .90m/s²
Adhesion coefficient Mo/Br.....  .10 / .12
RMS line current tot/Mo........  528A/ 493A
Journey speed..................  33.8km/h
RMS motor current..............   64A
Energy drawn from line......... 11244.2Wh
Dynamic brake energy...........  5141.7Wh
Total energy consumption.......  6102.5Wh
 841m/  .2%/ 70km/h -   23m/ 5.3%/ 70km/h
  97m/ 5.3%/ 18km/h -   30m/ 0.0%/ 18km/h
  90m/-5.8%/ 18km/h -   63m/ 0.0%/ 18km/h
 317m/ 0.0%/ 70km/h -   70m/ 4.1%/ 70km/h
  60m/-2.8%/ 70km/h -   51m/ 0.0%/ 70km/h
```

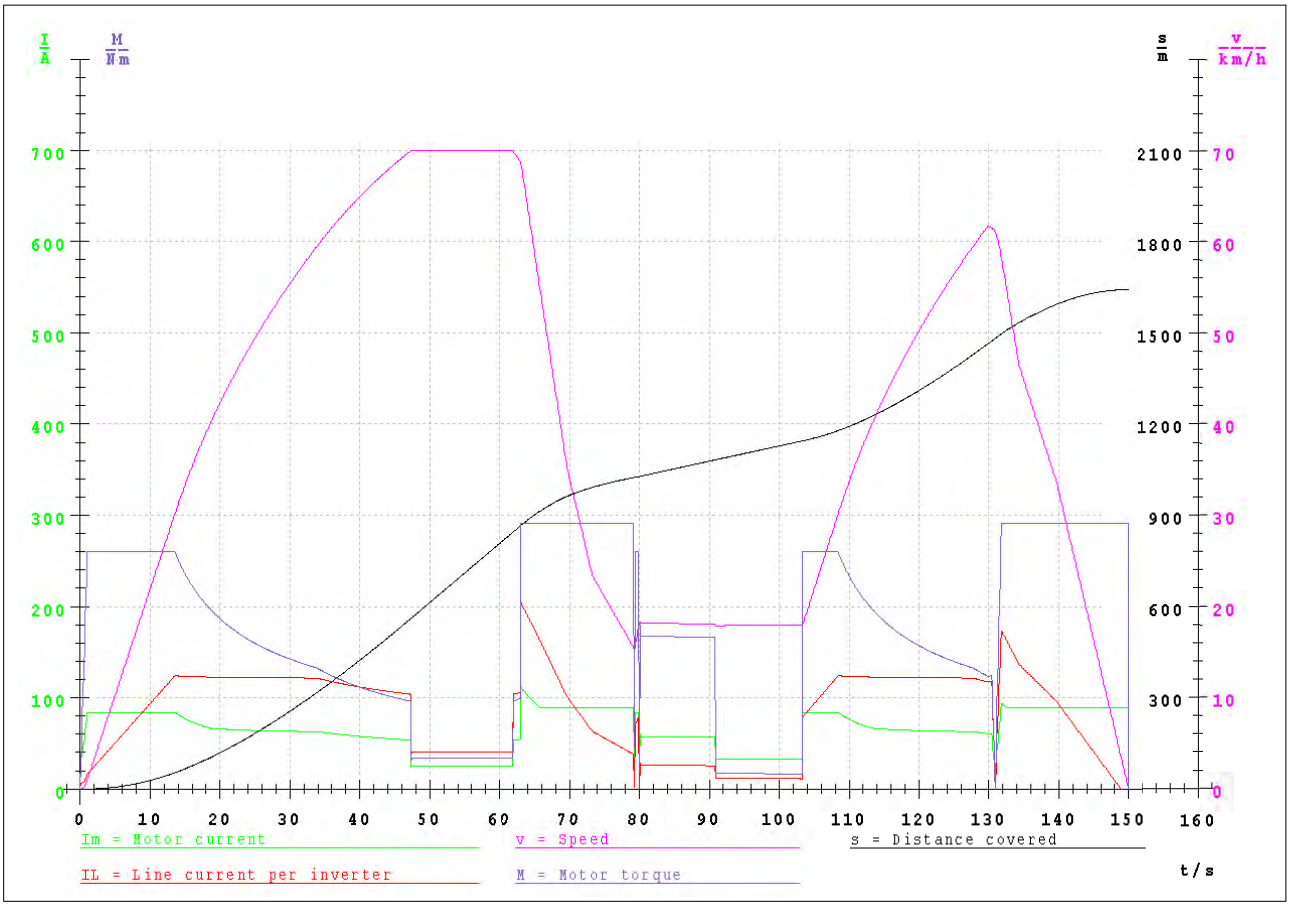

Vossloh KIEPE GmbH
DÜSSELDORF
Abt. E2

12.07.07
12070713

Edinburgh Tram Network

Tram-OCT-AIR AW2
Saughton Road North-South Gyle Access

```
Weight of vehicle..............  54.84t
Pay load.......................  18.47t
Line voltage Mo/Br.............  750V/ 900V
Distance between stops.........  1263.0m
Dwell time.....................  25.0s
Wheel diameter.................  590mm
Gear ratio.....................  5.440/ 1
Max. acceleration..............  1.08m/s²
Max. deceleration..............  1.12m/s²
Mean deceleration..............   .90m/s²
Adhesion coefficient Mo/Br.....  .15 / .15
RMS line current tot/Mo........  716A/ 609A
Journey speed..................  41.3km/h
RMS motor current..............   78A
Energy drawn from line.........  8568.6Wh
Dynamic brake energy...........  4457.4Wh
Total energy consumption.......  4111.2Wh
 249m/ 0.0%/ 70km/h -  120m/-2.4%/ 70km/h
 190m/ 0.0%/ 70km/h -   80m/ 5.4%/ 70km/h
  30m/ 0.0%/ 70km/h -   70m/-5.5%/ 70km/h
 180m/ 0.0%/ 70km/h -  120m/ 5.0%/ 70km/h
 100m/-4.3%/ 70km/h -  124m/ 0.0%/ 70km/h
```

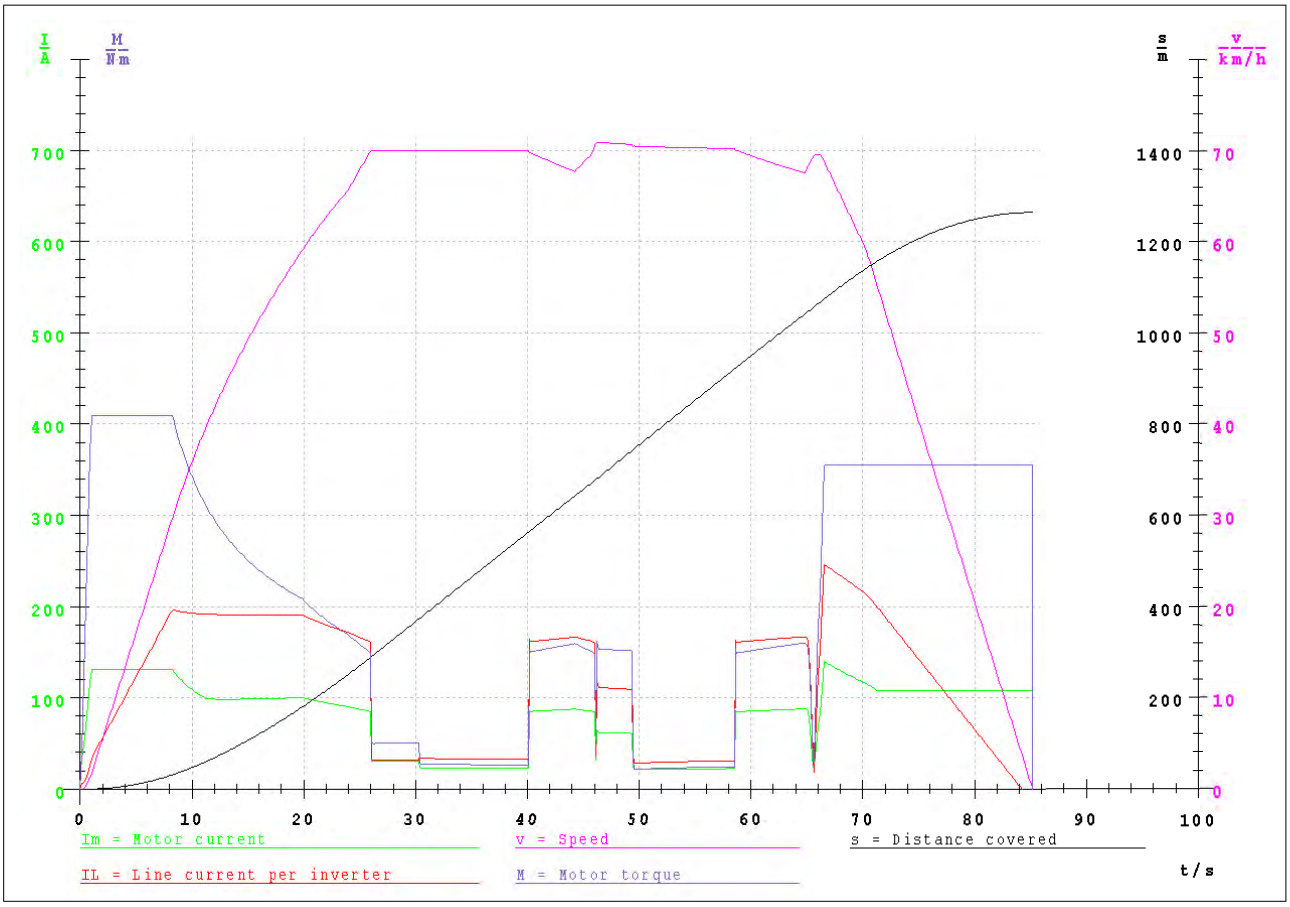

Vossloh KIEPE GmbH
DÜSSELDORF
Abt. E2

12.07.07
12070714

Edinburgh Tram Network

Tram-OCT-AIR AW2
South Gyle Access-Edinburgh Park South

Weight of vehicle.....	54.84t
Pay load.....	18.47t
Line voltage Mo/Br.....	750V/ 900V
Distance between stops.....	786.0m
Dwell time.....	25.0s
Wheel diameter.....	590mm
Gear ratio.....	5.440/ 1
Max. acceleration.....	1.08m/s²
Max. deceleration.....	.95m/s²
Mean deceleration.....	.90m/s²
Adhesion coefficient Mo/Br.....	.16 / .10
RMS line current tot/Mo.....	668A/ 597A
Journey speed.....	32.5km/h
RMS motor current.....	75A
Energy drawn from line.....	6468.7Wh
Dynamic brake energy.....	2721.6Wh
Total energy consumption.....	3747.1Wh

596m/ .3%/ 70km/h - 190m/ 1.4%/ 70km/h

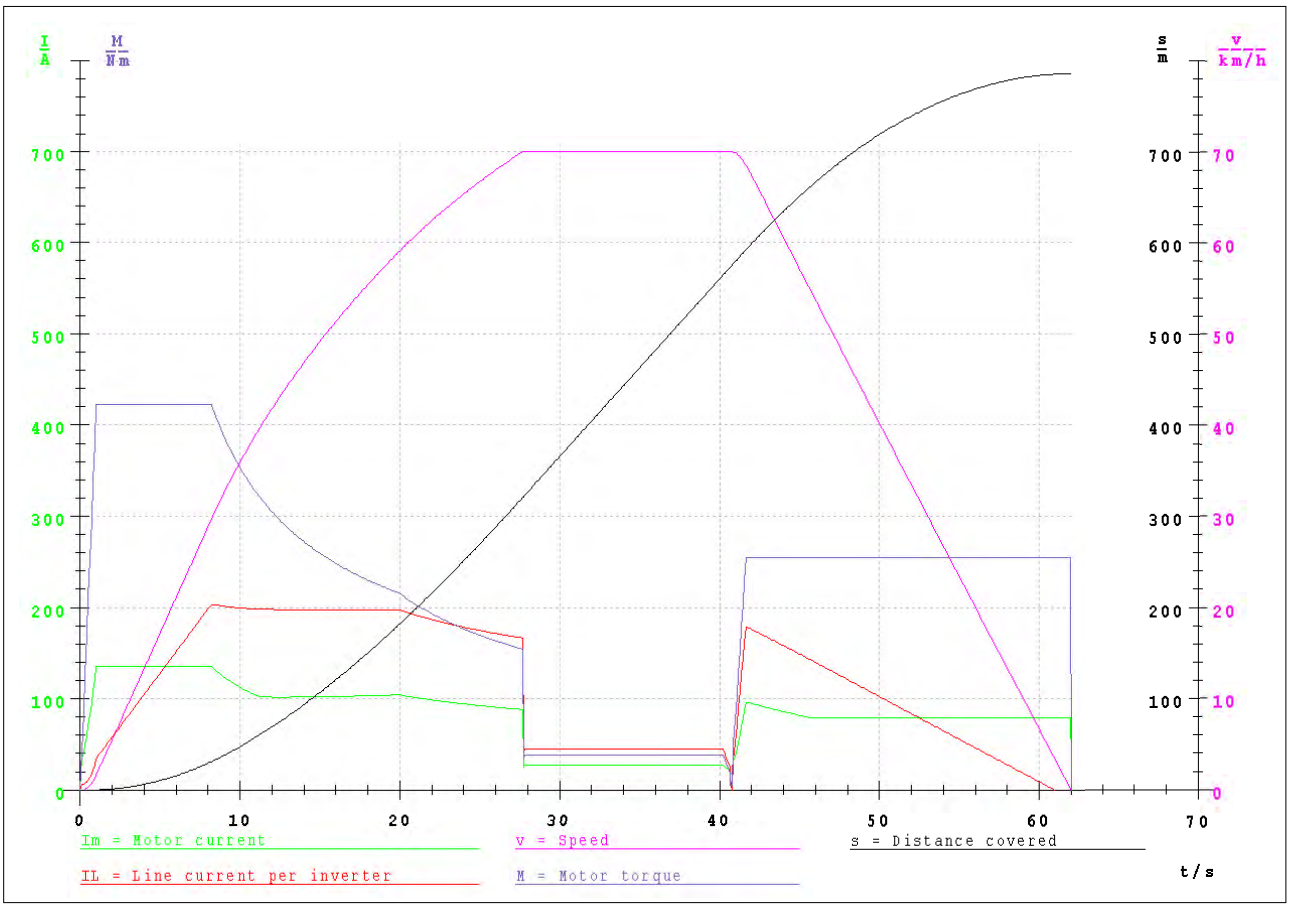

Vossloh KIEPE GmbH
DÜSSELDORF
Abt. E2

12.07.07
12070715

Edinburgh Tram Network

Tram-OCT-AIR AW2
Edinburgh Park South-Edinburgh Park

Weight of vehicle.....	54.84t
Pay load.....	18.47t
Line voltage Mo/Br.....	750V/ 900V
Distance between stops.....	795.0m
Dwell time.....	25.0s
Wheel diameter.....	590mm
Gear ratio.....	5.440/ 1
Max. acceleration.....	.95m/s²
Max. deceleration.....	.99m/s²
Mean deceleration.....	.90m/s²
Adhesion coefficient Mo/Br.....	.15 / .13
RMS line current tot/Mo.....	452A/ 440A
Journey speed.....	24.6km/h
RMS motor current.....	65A
Energy drawn from line.....	5106.4Wh
Dynamic brake energy.....	2796.6Wh
Total energy consumption.....	2309.8Wh

40m/ 1.4%/ 70km/h - 60m/ 0.0%/ 70km/h
150m/ 5.4%/ 35km/h - 40m/ 0.0%/ 35km/h
190m/-5.7%/ 35km/h - 315m/ 0.0%/ 35km/h

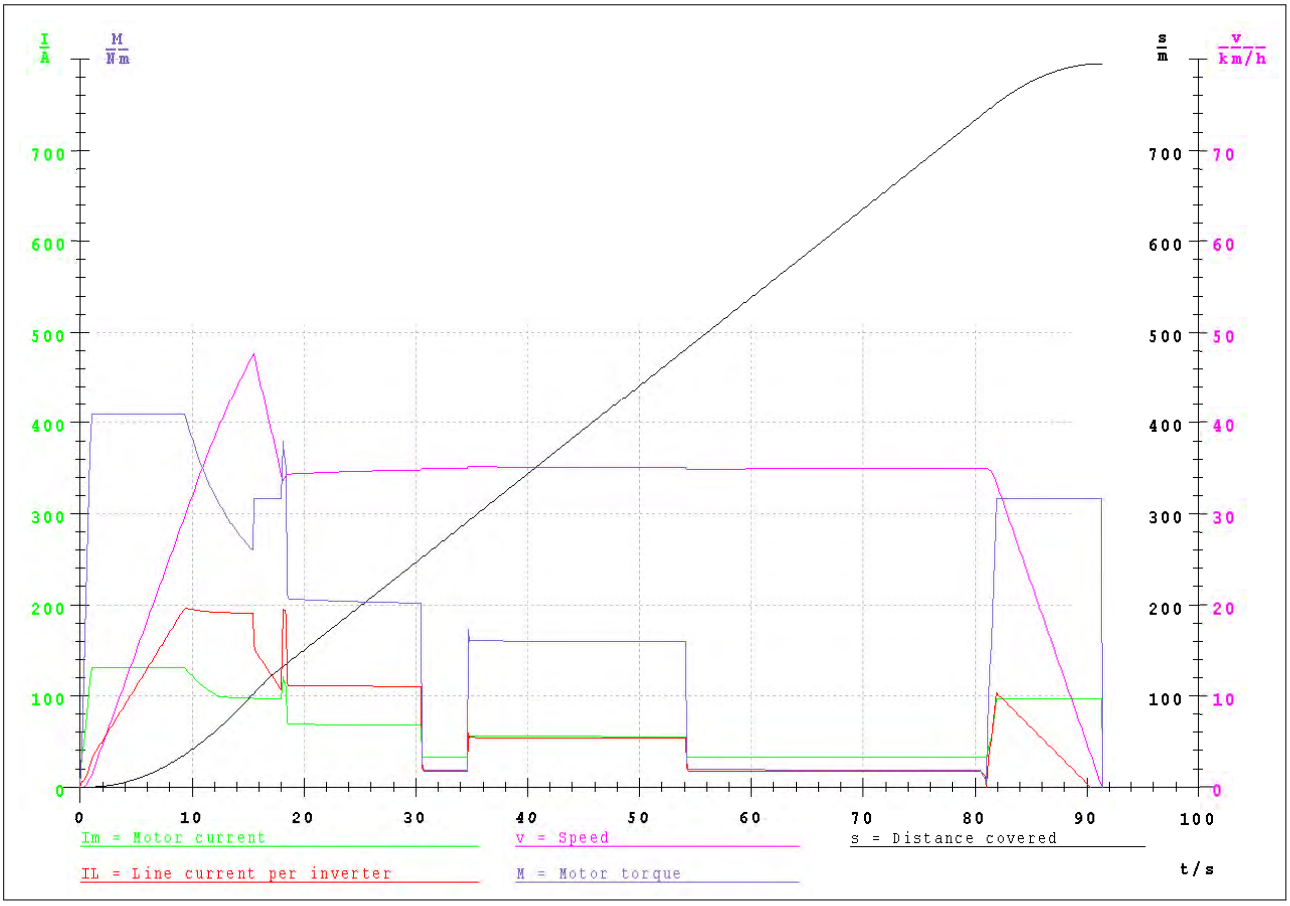

Vossloh KIEPE GmbH
DÜSSELDORF
Abt. E2

12.07.07
12070716

Edinburgh Tram Network

Tram-OCT-AIR AW2
Edinburgh Park-Gyle

Weight of vehicle.....	54.84t
Pay load.....	18.47t
Line voltage Mo/Br.....	750V/ 900V
Distance between stops.....	828.0m
Dwell time.....	25.0s
Wheel diameter.....	590mm
Gear ratio.....	5.440/ 1
Max. acceleration.....	1.08m/s²
Max. deceleration.....	1.05m/s²
Mean deceleration.....	.90m/s²
Adhesion coefficient Mo/Br.....	.15 / .12
RMS line current tot/Mo.....	644A/ 552A
Journey speed.....	33.3km/h
RMS motor current.....	74A
Energy drawn from line.....	5405.2Wh
Dynamic brake energy.....	3045.0Wh
Total energy consumption.....	2360.1Wh

290m/ 0.0%/ 70km/h - 330m/ -.9%/ 70km/h
60m/ 1.3%/ 25km/h - 148m/ 0.0%/ 25km/h

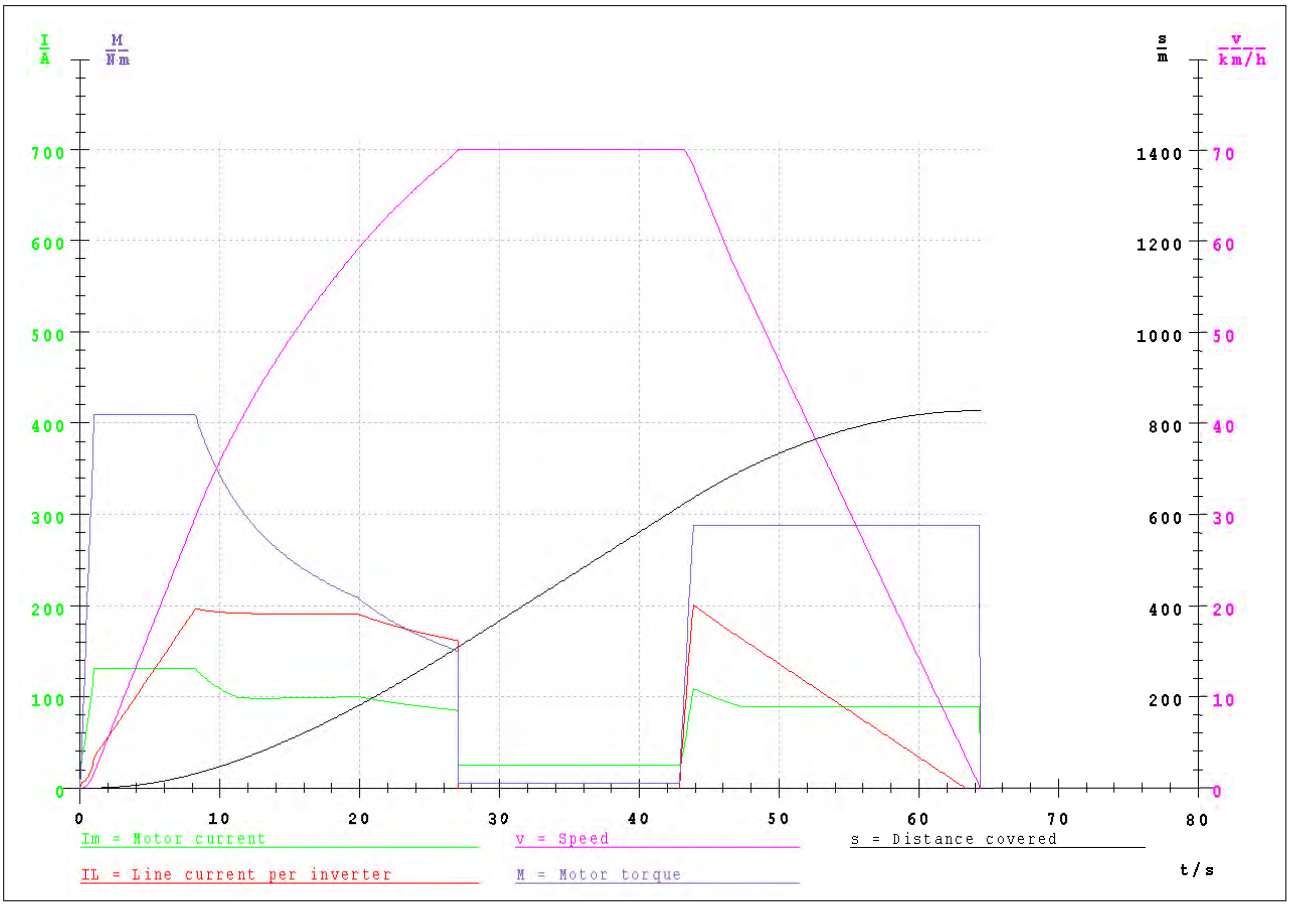

Vossloh KIEPE GmbH
DÜSSELDORF
Abt. E2

12.07.07
12070717

Edinburgh Tram Network

Tram-OCT-AIR AW2
Gyle-Gogarburn DEH included

Weight of vehicle..... 54.84t
Pay load..... 18.47t
Line voltage Mo/Br..... 750V/ 900V
Distance between stops..... 1096.0m
Dwell time..... 25.0s
Wheel diameter..... 590mm
Gear ratio..... 5.440/ 1
Max. acceleration..... 1.08m/s²
Max. deceleration..... .97m/s²
Mean deceleration..... .90m/s²
Adhesion coefficient Mo/Br..... .15 / .11
RMS line current tot/Mo..... 413A/ 401A
Journey speed..... 25.5km/h
RMS motor current..... 60A
Energy drawn from line..... 6899.2Wh
Dynamic brake energy..... 2391.3Wh
Total energy consumption..... 4507.9Wh
112m/ 0.0%/ 35km/h - 80m/-5.5%/ 35km/h
190m/ 0.0%/ 18km/h - 298m/ .9%/ 45km/h
72m/ .9%/ 40km/h - 80m/ 4.4%/ 40km/h
264m/ .8%/ 40km/h - 0m/ 5.0%/ 70km/h

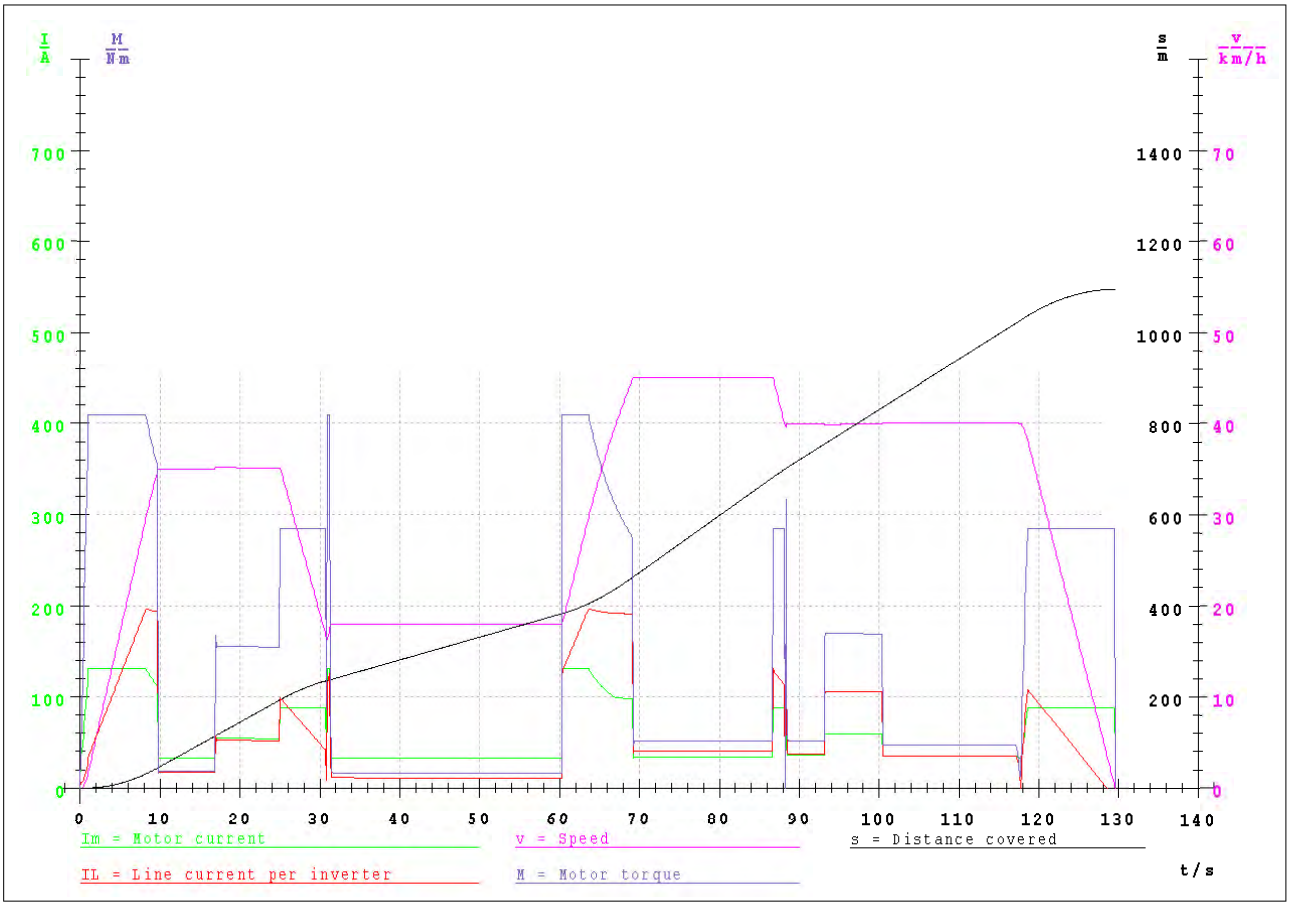

Vossloh KIEPE GmbH
DÜSSELDORF
Abt. E2

12.07.07
12070718

Edinburgh Tram Network

Tram-OCT-AIR AW2
Gogarburn-Ingliston Park and Ride

```
Weight of vehicle..............  54.84t
Pay load.......................  18.47t
Line voltage Mo/Br.............  750V/ 900V
Distance between stops......... 1756.0m
Dwell time.....................  25.0s
Wheel diameter.................  590mm
Gear ratio.....................  5.440/ 1
Max. acceleration..............  1.08m/s²
Max. deceleration..............   .90m/s²
Mean deceleration..............   .81m/s²
Adhesion coefficient Mo/Br.....  .11 / .16
RMS line current tot/Mo........  499A/ 483A
Journey speed..................  32.4km/h
RMS motor current..............   67A
Energy drawn from line.........  9175.6Wh
Dynamic brake energy...........  5712.4Wh
Total energy consumption.......  3463.2Wh
  70m/  .7%/ 40km/h -   70m/-3.6%/ 20km/h
 244m/ -.7%/ 20km/h -  336m/ -.7%/ 70km/h
  90m/ 0.0%/ 70km/h -   80m/-2.8%/ 70km/h
 210m/ 1.0%/ 70km/h -   80m/-3.4%/ 70km/h
  80m/  .5%/ 70km/h -   70m/ 1.6%/ 70km/h
 100m/-3.9%/ 70km/h -   44m/ 1.7%/ 70km/h
 166m/ 1.7%/ 20km/h -  116m/-3.6%/ 70km/h
```

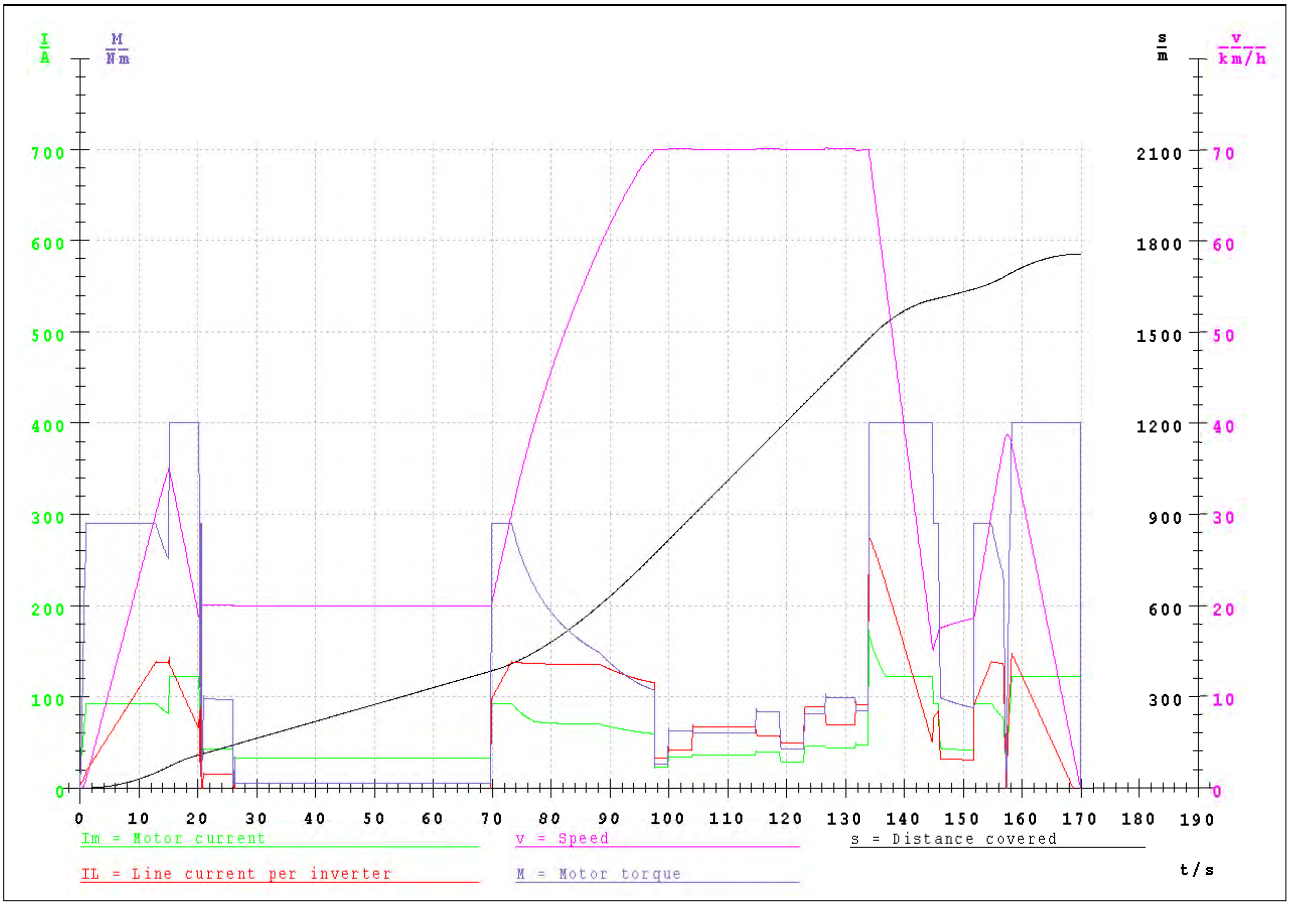

Vossloh KIEPE GmbH
DÜSSELDORF
Abt. E2

12.07.07
12070719

Edinburgh Tram Network

Tram-OCT-AIR AW2
Ingliston Park and Ride-Edinburgh Airport

Weight of vehicle.....	54.84t
Pay load.....	18.47t
Line voltage Mo/Br.....	750V/ 900V
Distance between stops.....	823.0m
Dwell time.....	25.0s
Wheel diameter.....	590mm
Gear ratio.....	5.440/ 1
Max. acceleration.....	1.08m/s²
Max. deceleration.....	.98m/s²
Mean deceleration.....	.90m/s²
Adhesion coefficient Mo/Br.....	.11 / .13
RMS line current tot/Mo.....	565A/ 430A
Journey speed.....	33.5km/h
RMS motor current.....	65A
Energy drawn from line.....	4755.4Wh
Dynamic brake energy.....	3410.6Wh
Total energy consumption.....	1344.8Wh

114m/-3.6%/ 70km/h - 190m/ 0.0%/ 70km/h
60m/-3.5%/ 70km/h - 120m/ 0.0%/ 70km/h
50m/ 2.4%/ 70km/h - 180m/ -.9%/ 70km/h
109m/ 0.0%/ 70km/h - 0m/ 0.0%/ 70km/h

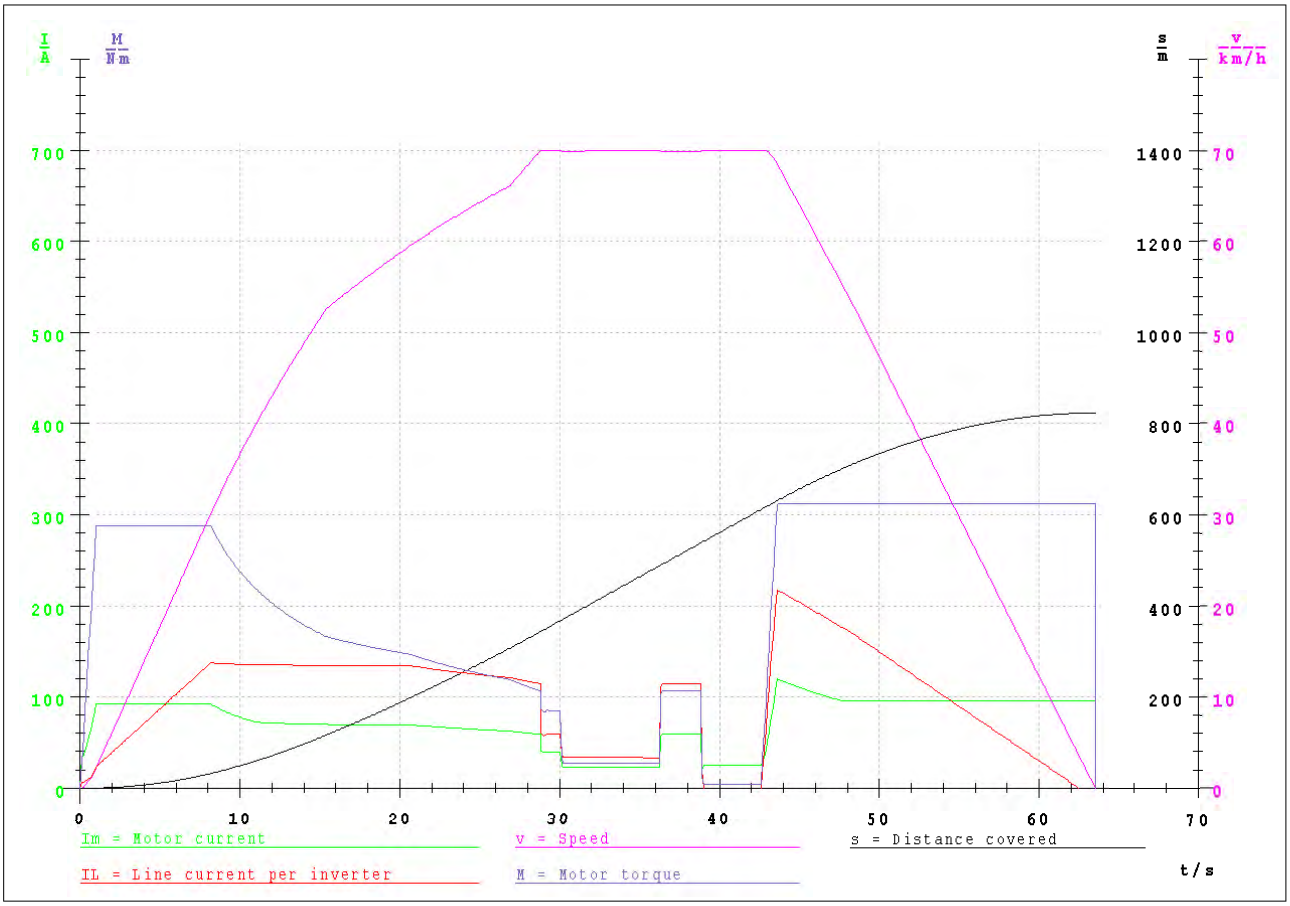

Weight of vehicle	54.841	t
Pay Load	18.471	t
Wheel diameter	590	mm
Gear ratio	5.440	/ 1
Linevoltage motoring mode	750	V
Linevoltage braking mode	900	V
max. acceleration (90 %)	1.08	m/s^2
Mean deceleration (75%)	0.90	m/s^2
Efficiency of gear box	96	%
Number of inverters per car	6	
Number of motors per inverter	2	
Number of brake resistors	6	

Edinburgh Airport - Ocean Terminal

station		distance in m	dwell time in s	ride time in s	journey time in s	receipted energy in Wh	regenerated energy in Wh	RMS motor current in A	RMS line current in A	brake time in s	brake power in kW
Edinburgh Airport	AIR										
1		823	25	65	90	6644	2518	71	642	18	504
Ingliston Park and Ride	IPR										
2		1756	25	168	193	11855	3593	71	565	18	719
Gogarburn	GOG										
3 DEH included		1096	25	129	154	5709	2143	61	393	16	482
Gyle	GYL										
4		828	25	81	106	5289	3161	69	576	20	569
Edinburgh Park	EDP										
5		795	25	90	115	5701	2507	66	473	15	602
Edinburgh Park South	EPS										
6		786	25	61	86	5090	3283	74	641	20	591
South Gyle Access	SGA										
7		1263	25	87	112	8384	4119	73	670	21	706
Saughton Road North	SRN										
8		1642	25	138	163	11548	6851	70	616	36	685
Balgreen Road	BAR										
9		1057	25	76	101	8673	4722	88	780	20	850
Murrayfield	MUR										
10 ROJ included		1221	25	156	181	7175	2092	71	402	23	327
Haymarket	HAY										
11		594	25	116	141	5753	1540	62	392	18	308
Shandwick Place	SHP										
12		673	25	69	94	5200	2716	76	589	24	407
Princes Street	PSW										
13		884	25	89	114	7973	2921	79	600	25	421
St Andrew Square	SAS/SSD										
14		530	25	66	91	2058	3513	72	397	18	703
Picardy Place	PIP										
15		560	25	70	95	1886	3860	67	413	16	869
McDonald Road	MDR										
16		638	25	62	87	2187	2847	66	426	16	641
Balfour Street	BAS										
17		564	25	56	81	2293	2694	70	455	14	693
Foot of Walk	FOW										
18		548	25	82	107	2578	2044	67	390	16	460
Constitution Street	COS										
19		483	25	64	89	3265	1594	66	441	13	441
Ocean Drive	OCD										
20		837	25	134	159	5123	1936	60	377	18	387
Ocean Terminal	OCT										
Total		**17578**			**2359**	**114384**	**60654**	**68**	**502**		

Results of teh calculation:

Energy drawn from line	114.38	kWh	6.51 kWh/km
Dynamic brake energy	60.65	kWh	3.45 kWh/km
Total energy consumption	53.73	kWh	3.06 kWh/km
Journey time	39.32	min	
Journey speed	26.83	km/h	
RMS motor current	68	A	
Average power of each brake resistor	15	kW	

1. **Tractive force diagram at AW2 load and 90 % tractive effort (a_{max} = 1.08 m/s^2)**

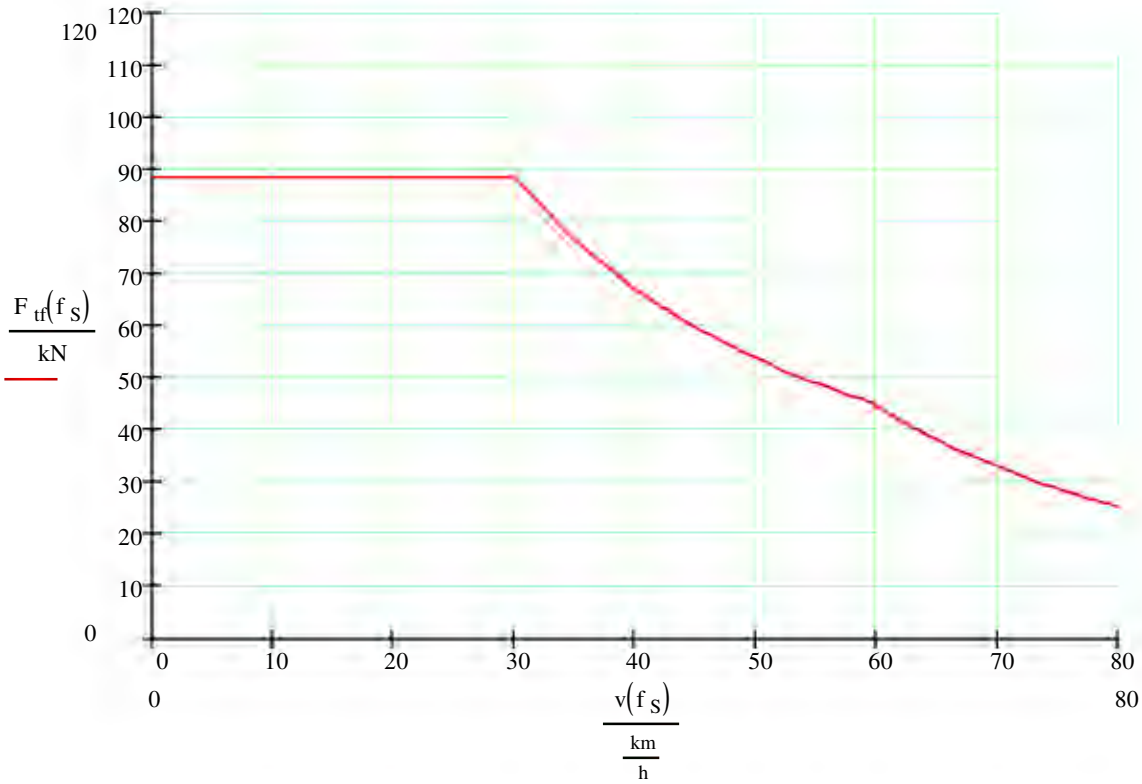

2. **Braking force diagram at AW2 load and 75 % braking effort (a_{mean} = - 0.9 m/s^2)**

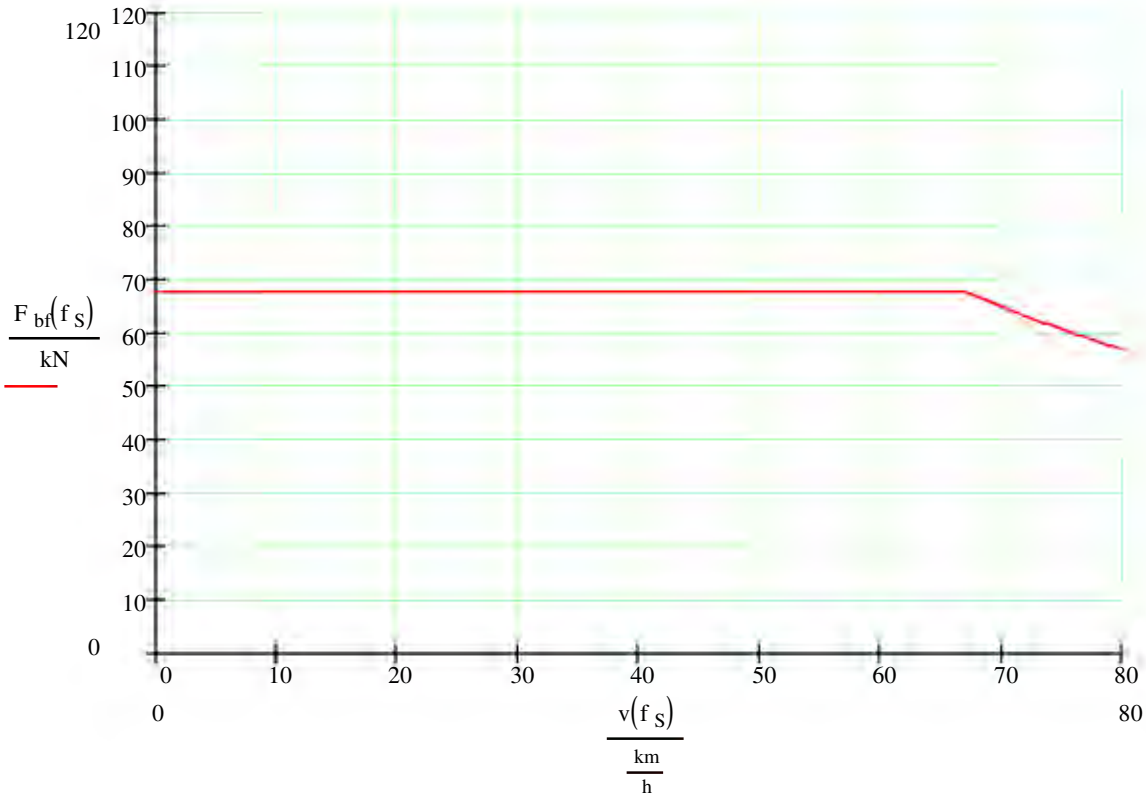

3. Tractive force diagram at AW4 load (a_{max} = 1.2 m/s^2)

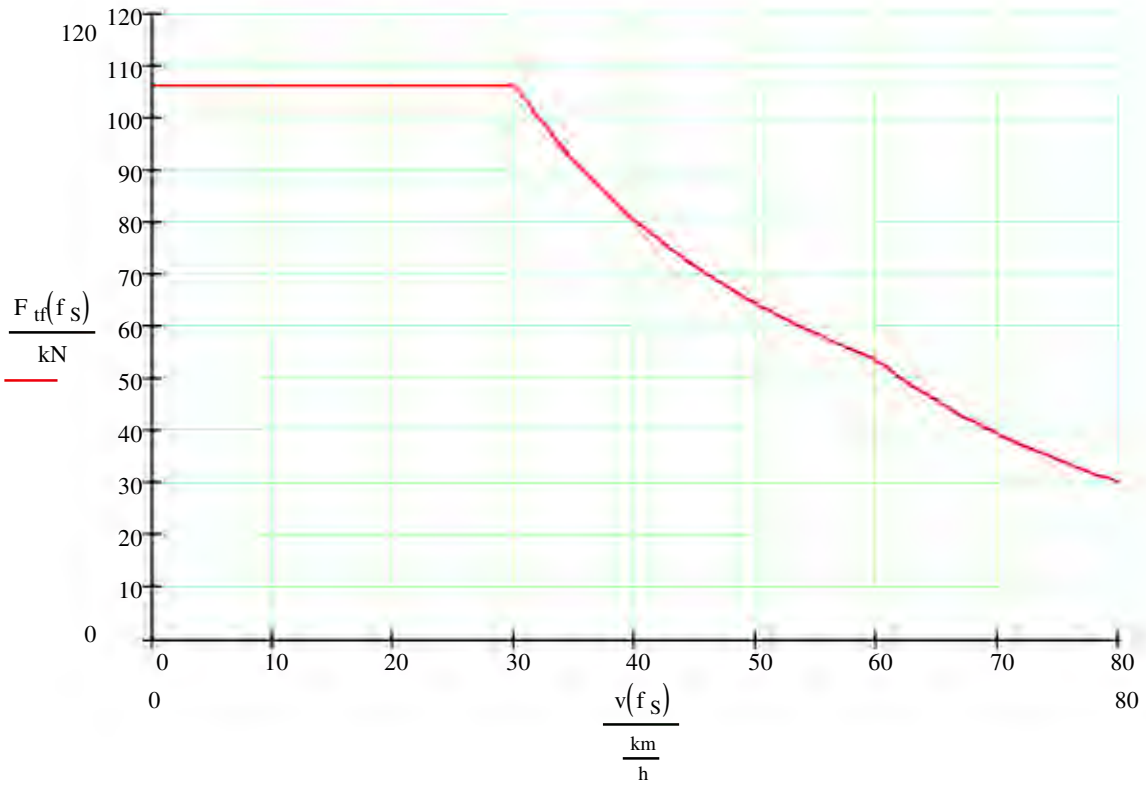

4. Braking force diagram at AW2 load (a_{mean} = - 1.2 m/s^2)

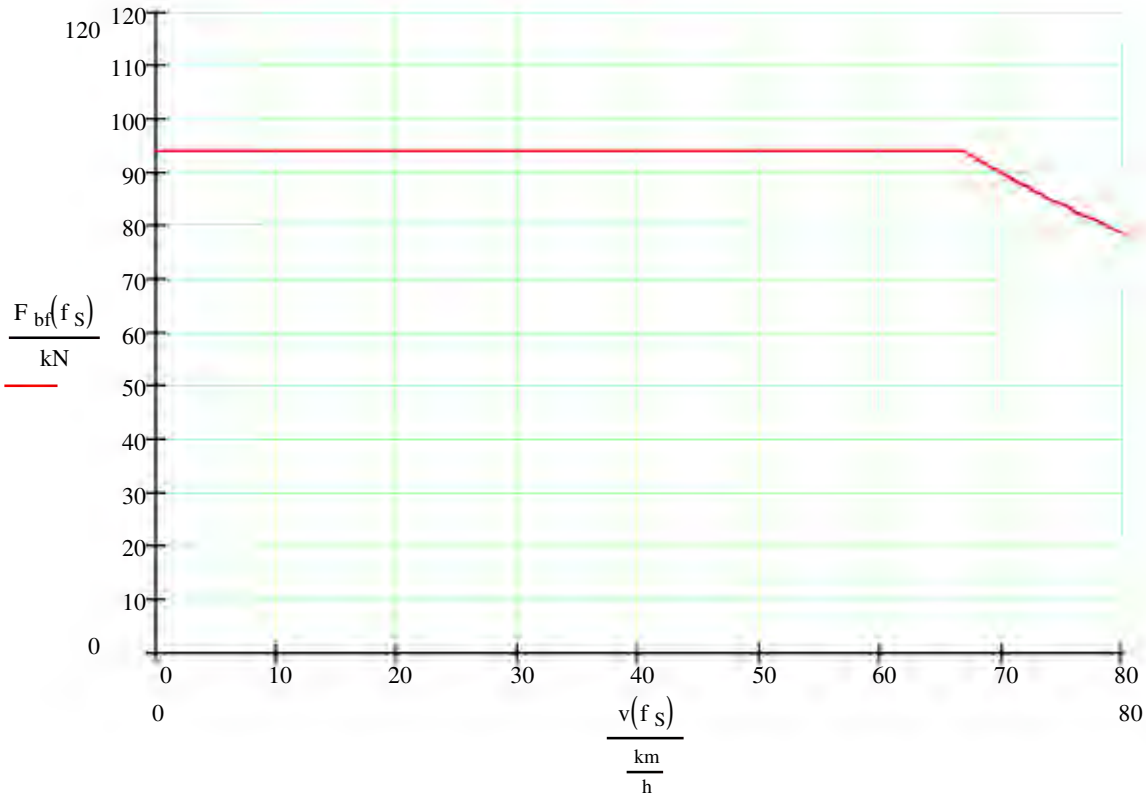

5. **Tractive force diagram at AW4 load and 66 % propulsion (degraded mode) (a_{max} = 0.78 m/s^2)**

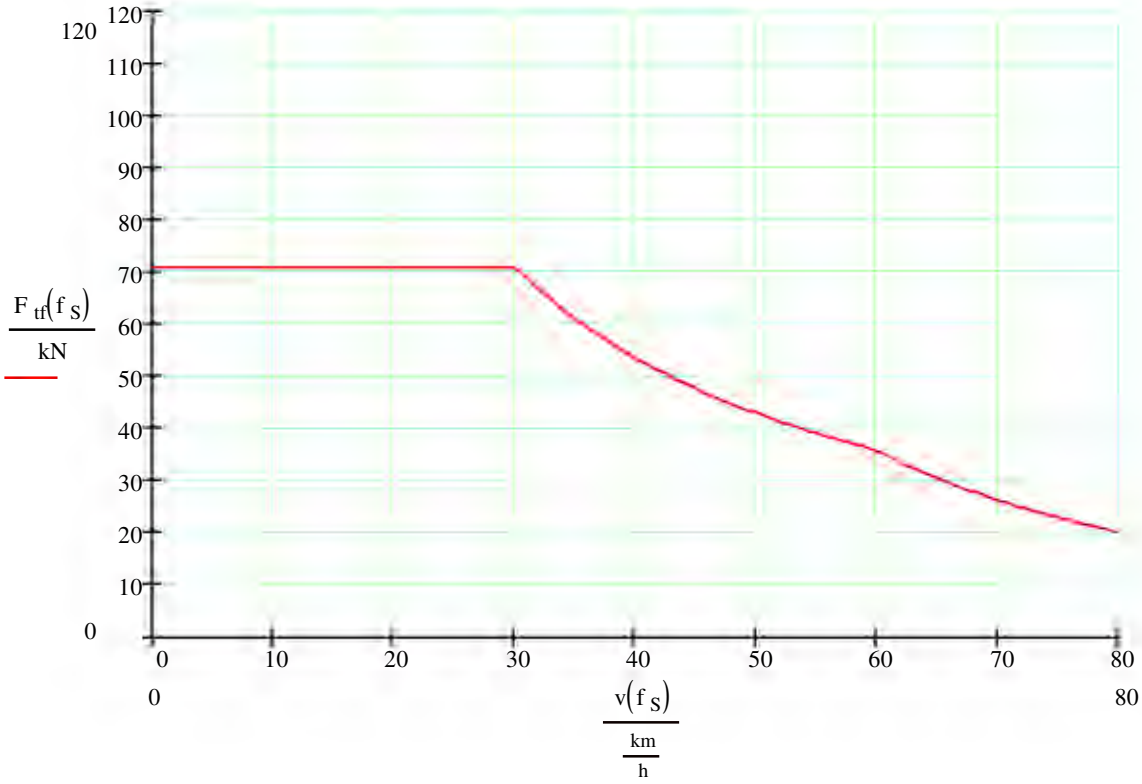

6. **Tractive force diagram at AW2 load and 66 % propulsion (degraded mode) (a_{mean} = - 0.83 m/s^2)**

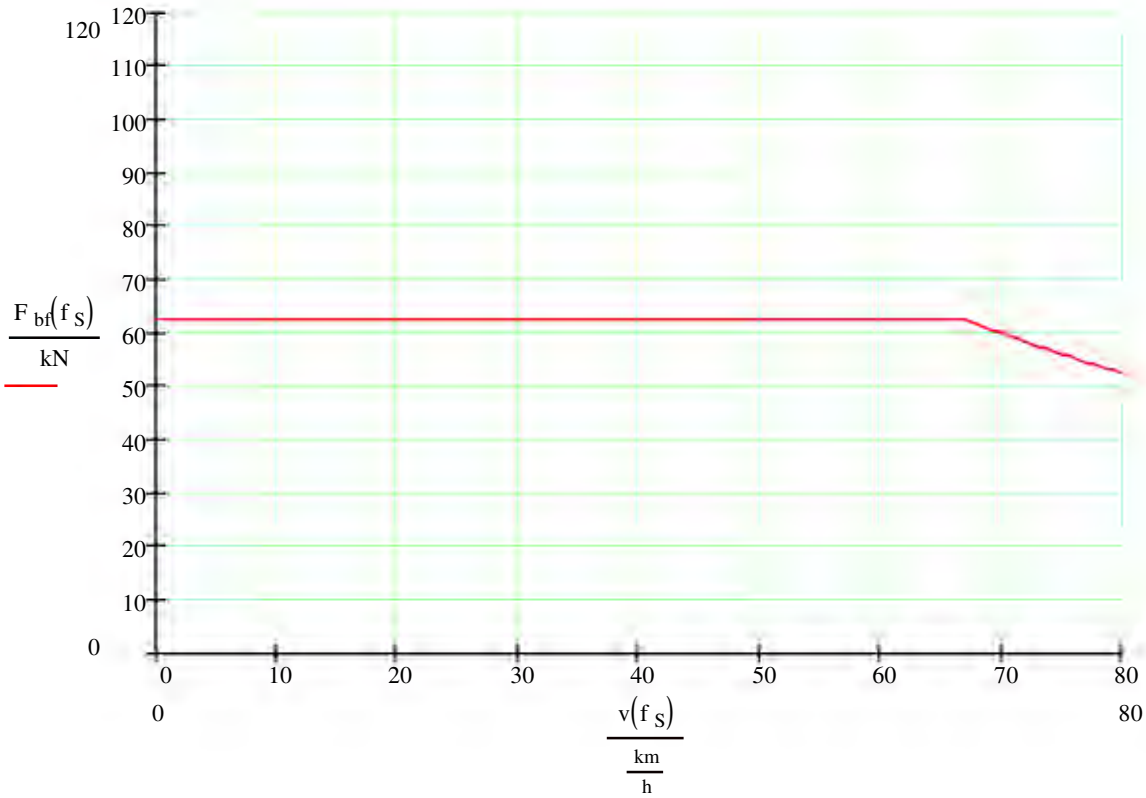

Tram Edinburgh

Dynamic Performance

Edition: 01

	Created:	*Revised:*	*Checked:*	*Released:*
Date:	2006-09-12	2007-01-25	2007-01-25	2007-01-25
Signature/ Name:	Kainz Reinhard	Kainz Reinhard	Dirnbacher Helmut	Dirnbacher Helmut

Update service, revision control:

Section:	Issue:	Description:
	00	First Edition
All	01	Complete document revised because of new vehicle weights

Copyright:

This description is the intellectual property of ELIN EBG Traction GmbH.
The reproduction, transmission or use of this document or its contents is not permitted without express written authority. Offenders will be liable for damages.
All rights created by patent grant or registration of a utility model or design are reserved.

Contents: Page

1 General 5
1.1 Assumptions and parameters for all simulations 6
2 Run trip simulations with 100% propulsion 7
2.1 Parameters for run trip simulation with AW2 load 7
2.2 Tractive force diagram at AW2 load and 90% tractive effort 7
2.3 Braking force diagram at AW2 load and 75% braking effort 8
2.4 Route Newhaven – Granton Square (max. velocity 80km/h) 9
2.5 Route Granton Square – Newhaven (max. velocity 80km/h) 11
2.6 Route Ocean Terminal – Edinburgh Airport (max. velocity 80km/h) 13
2.7 Route Edinburgh Airport - Ocean Terminal (max. velocity 80km/h) 16
2.8 Route Newhaven – Granton Square (max. velocity 70km/h) 19
2.9 Route Granton Square – Newhaven (max. velocity 70km/h) 21
2.10 Route Ocean Terminal – Edinburgh Airport (max. velocity 70km/h) 23
2.11 Route Edinburgh Airport - Ocean Terminal (max. velocity 70km/h) 26
3 Dynamic simulations with 100% propulsion 29
3.1 Parameters for dynamic simulation 29
3.2 Tractive force diagram at AW4 load and braking force diagram at AW2 load 29
3.3 Accelerations with AW4 load and 0% gradient 31
3.4 Accelerations with AW4 load and 8% gradient 32
3.5 Decelerations with AW2 load and 0% gradient 33
3.6 Decelerations with AW2 load and -8,0% gradient 34
4 Dynamic simulations with 66% propulsion (degraded mode) 35
4.1 Parameters for dynamic simulation 35
4.2 Tractive force diagram at AW4 load and braking force diagram at AW2 load in degraded mode 35
4.3 Accelerations with AW4 load and 0% gradient 38
4.4 Accelerations with AW4 load and 8,0% gradient 39
4.5 Decelerations with AW2 load and 0% gradient (only electrodynamic brake) 40
4.6 Decelerations with AW2 load and 0% gradient (electrodynamic and mechanical brake) 41
4.7 Decelerations with AW2 load and -8,0% gradient (only electrodynamic brake) 42
4.8 Decelerations with AW2 load and -8,0% gradient (electrodynamic and mechanical brake) 43
5 Dynamic simulations for towing 44
5.1 Parameters for dynamic simulation 44

5.2 Tractive force for towing with 2x AW0 load....44
5.3 Accelerations for towing with 2x AW0 load and 0% gradient....45
5.4 Accelerations for towing with 2x AW0 load and 8,0% gradient....46
5.5 Electrodynamic braking force for towing with 2x AW0 load....47
5.6 Decelerations for towing with 2x AW0 load and 0% gradient....48
5.7 Decelerations for towing with 2x AW0 load and -8,0% gradient....49

1 General

This description shows a standard duty cycle simulation and diagrams for Edinburgh.

The run trip simulations show following function at AW2 load.

- v = f(s) velocity as a function of distance
- v_{civ} = f(s) lcivil speed limit as a function of distance
- alt = f(s) relative altitude as a function of distance

Furthermore following dynamic diagrams are shown:

- v = f(t) velocity as a function of time
- a = f(t) acceleration as a function of time
- ā = f(s) mean acceleration as a function of time
- F = f(v) tractive force as a function of velocity

These functions are performed with AW4 load (acceleration diagrams), AW2 load (braking diagrams) and AW0 load (towing mode) at different gradients 0% and 8,0%.

1.1 Assumptions and parameters for all simulations

It is assumed that for all cases during braking the voltage can be increased up to 900 V. Generally the simulation presumes sufficient adhesion between wheel and rail and optimal environmental conditions.

Line current during deceleration is the current that could be recuperated to a full receptive line. The accuracy of the simulation is limited by the tolerances in numeric calculation and approximation errors of modelling. Therefore the characteristics of the real vehicle might vary from the results of this simulation in a certain range.

Following data are applied to all simulations:

Initial acceleration:	1,20 m/s²
Max. service brake (elec.):	-1,33 m/s²
Average service brake (0km/h to 80km/h):	-1,20 m/s²
Jerk limitation (traction):	0,9 m/s³
Jerk limitation (service braking):	0,9 m/s³
Braking voltage:	900 VDC
Ambient temperature for simulations:	43°C
Station dwell time	25 sec
End station dwell time:	25 sec
Traction inverter efficiency:	97% constant
Gear box efficiency:	97% constant
Gear box ratio:	5,444:1
Motor efficiency:	efficiency versus frequency (see document “Type Test Report of Traction Motor” submitted to CAF (Mr. Imaz) by April 20th, 2005
Weight distribution:	according from document “WeightDistribution.doc” submitted by CAF on January 15th, 2007
Civil speed limit:	according from document “Stage3 (Preliminary Design) operations simulations report.pdf” Fig. 3.1.5 – Fig.3.1.8 submitted by CAF on January 15th, 2007

Weight:	AW0 (54,841t)	AW2 (73,312t)	AW3 (76,483t)	AW4(79,657t)	AW5(86,003t)
Motor bogie A:	26,0%	24,7%	24,5%	24,3%	24,0%
Trailer bogie C:	22,3%	24,0%	24,3%	24,5%	24,9%
Motor bogie E:	26,1%	26,9%	27,0%	27,2%	27,4%
Motor bogie G:	25,6%	24,4%	24,2%	24,0%	23,7%

Brake blending below 3 km/h is not shown in the dynamic diagrams.

2 Run trip simulations with 100% propulsion

The vehicle consists of three motor bogies and one trailer bogie. The following simulations were made under the assumption that all three available propulsion systems are working properly.
It is assumed that during deceleration the line current could be recuperated to a full receptive line.

2.1 Parameters for run trip simulation with AW2 load

Catenary voltage for simulation:	750 VDC
Mean wheel diameter:	550 mm
Adhesion coefficient (traction):	min 0,16
Adhesion coefficient (braking):	min 0,14
Nominal loaded vehicle:	73,312 tons (AW2) and rotating mass of 4,11 tons
Parameters for all simulations:	see section 1.1
Recuperation to catenary:	100%
Dwell time:	25 sec
Tractive effort:	90% of Tractive force at AW2 load
Braking effort:	75% of Braking force at AW2 load

2.2 Tractive force diagram at AW2 load and 90% tractive effort

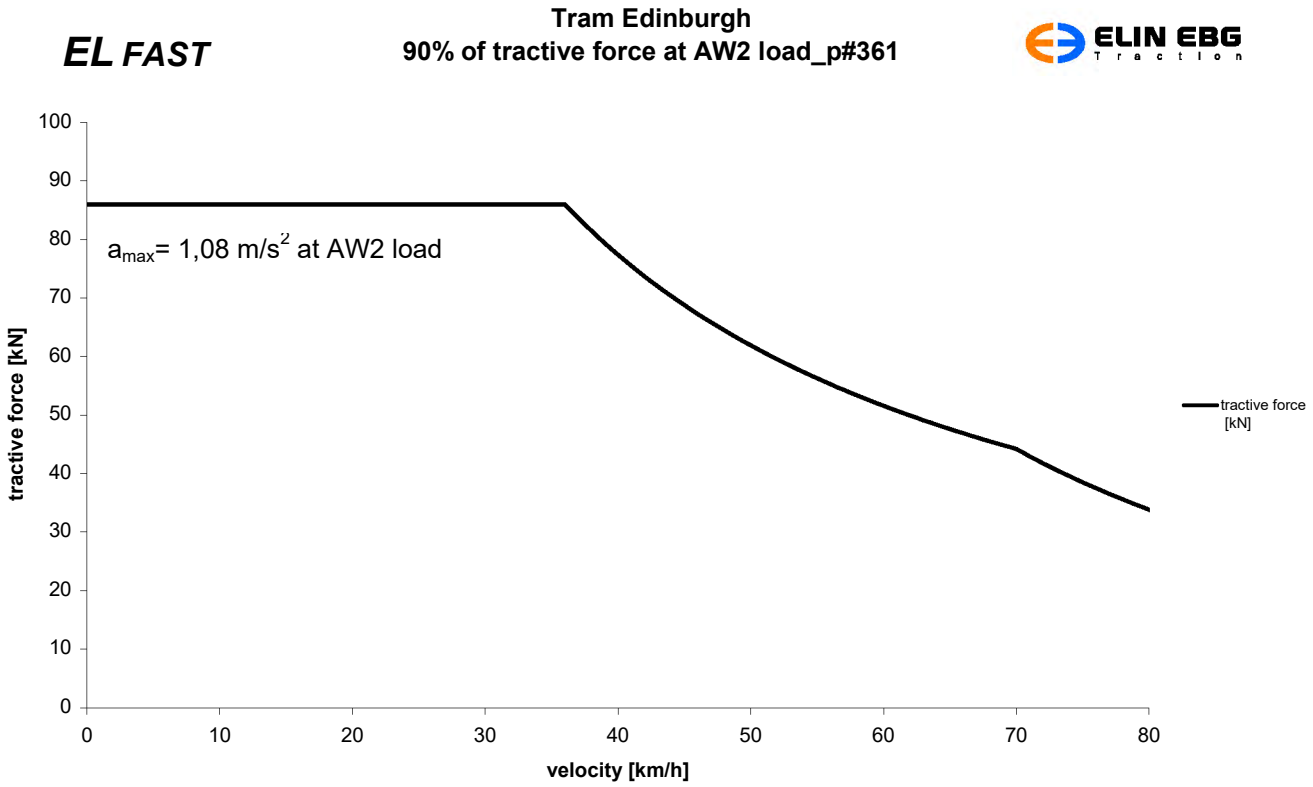

2.3 Braking force diagram at AW2 load and 75% braking effort

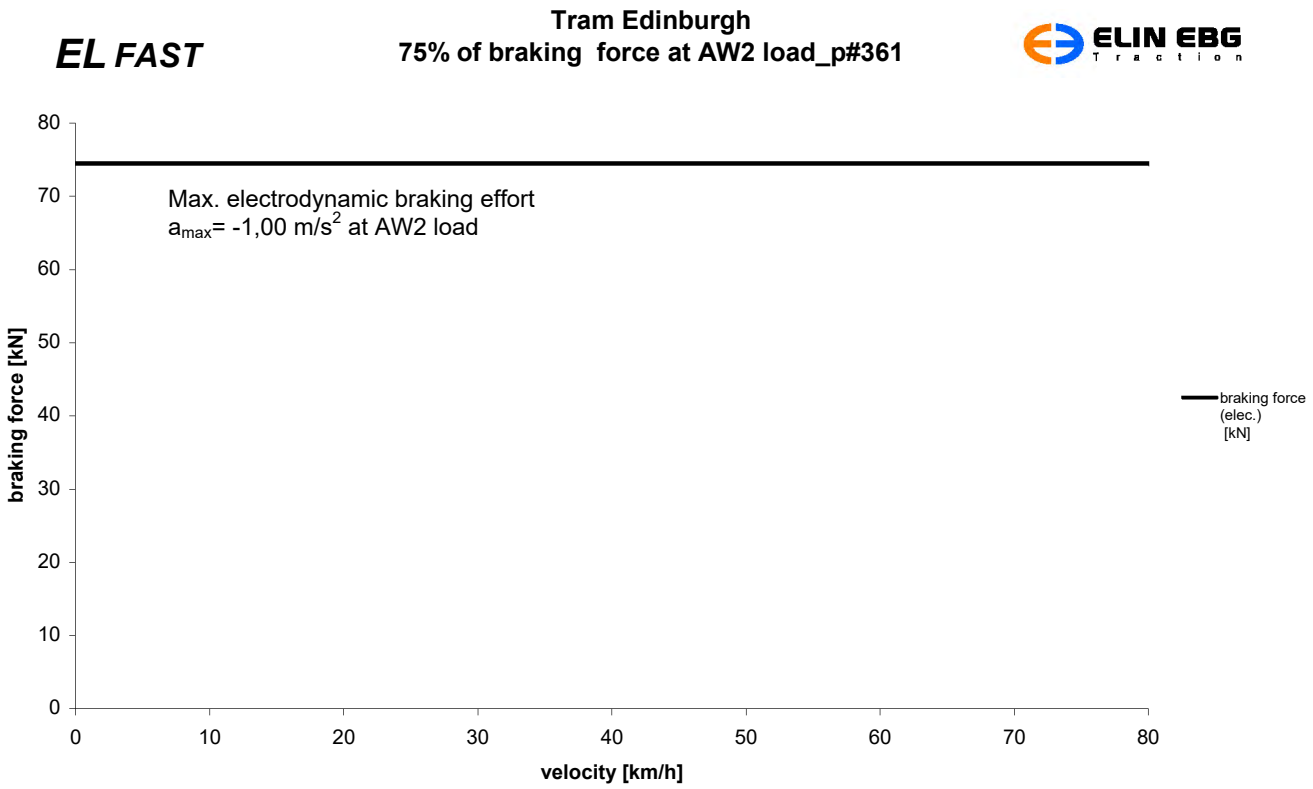

2.4 Route Newhaven – Granton Square (max. velocity 80km/h)

v = f(s), v_{civ} = f(s), alt = f(s) velocity, civil speed limit and relative altitude as a function of distance

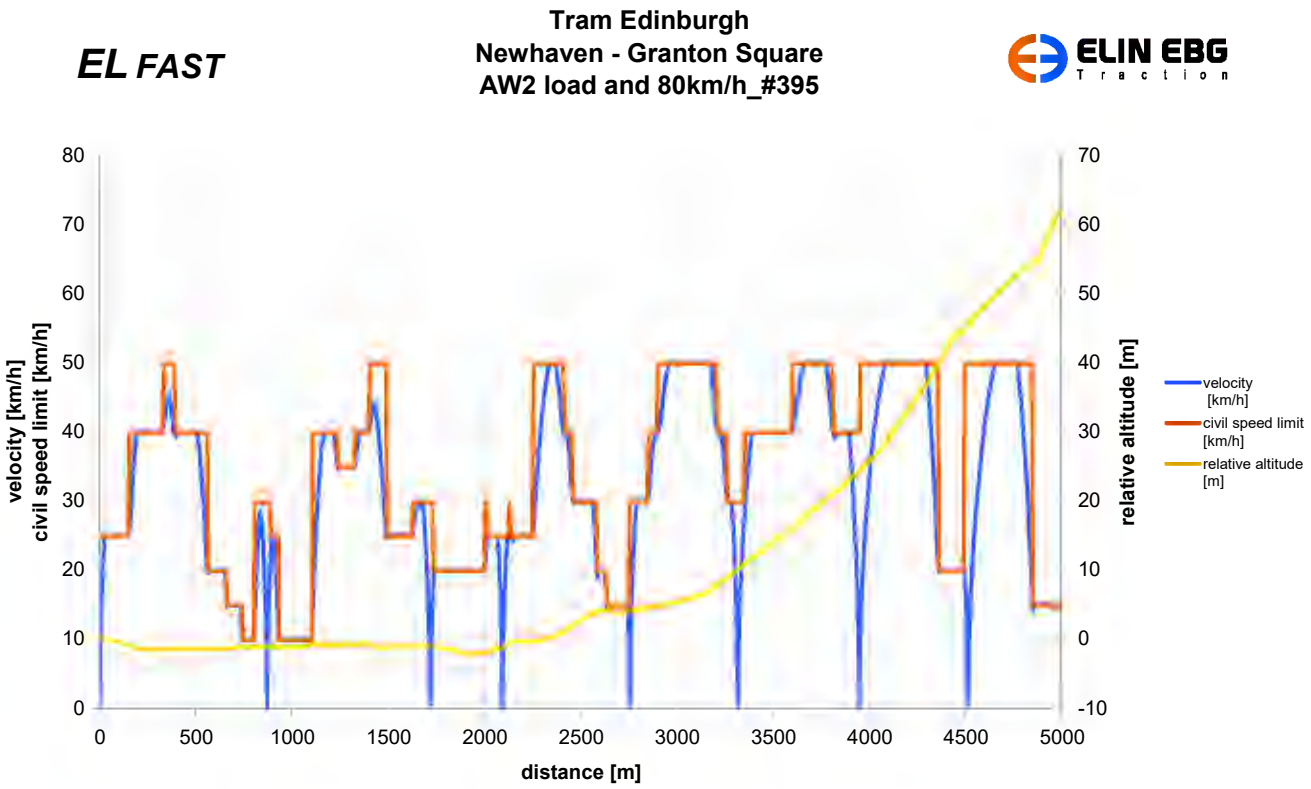

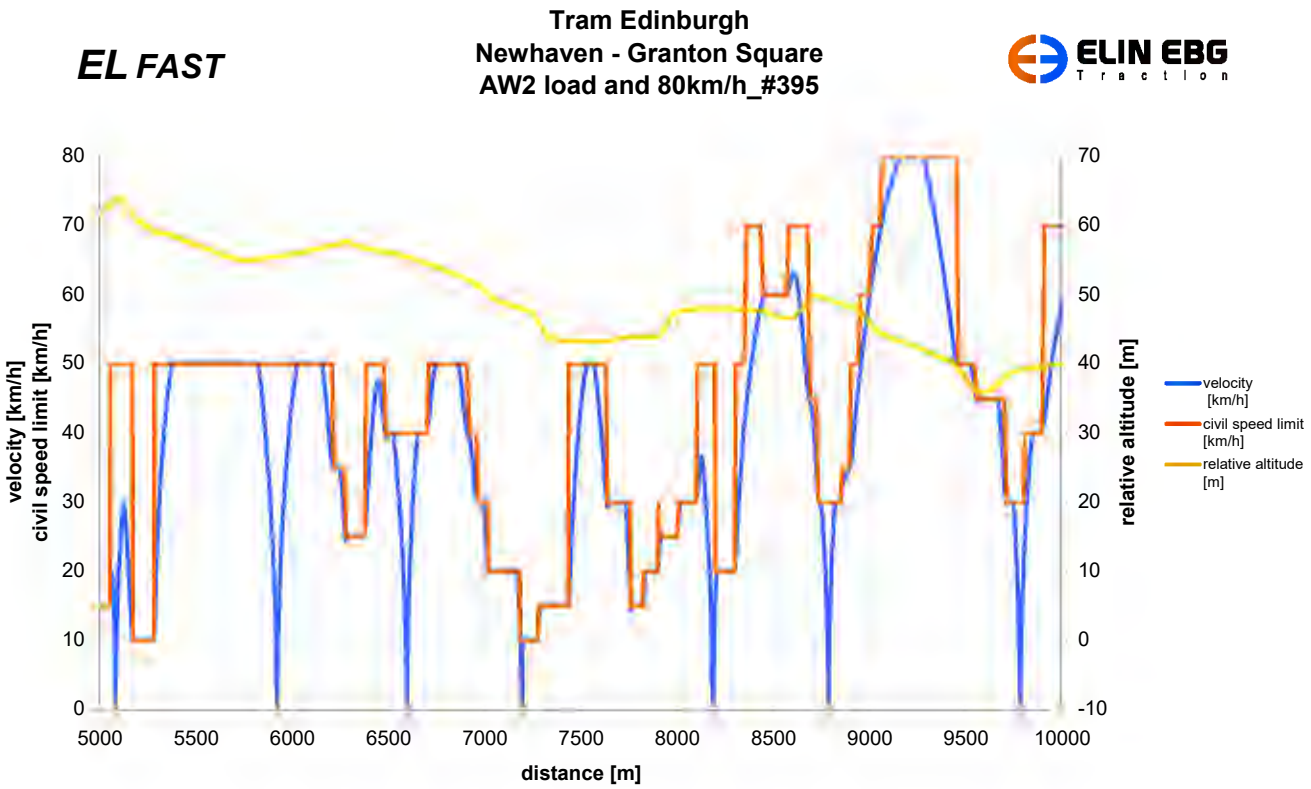

EL FAST

Tram Edinburgh
Newhaven - Granton Square
AW2 load and 80km/h_#395

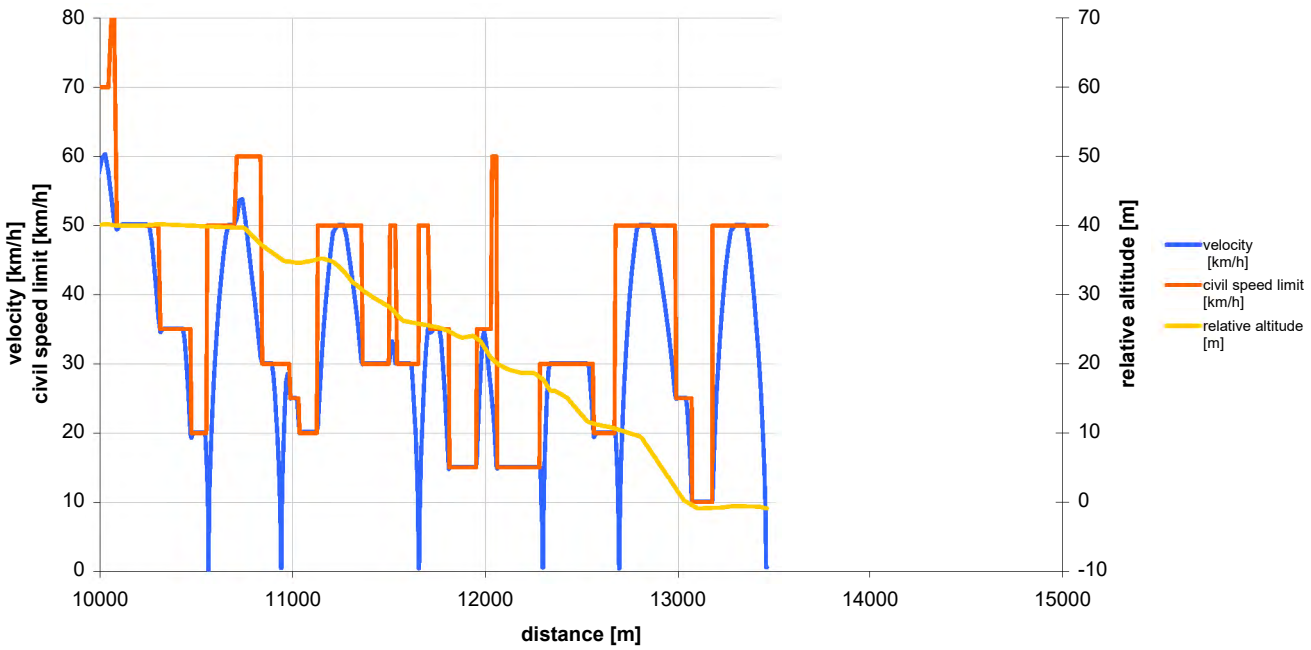

Station	Arrival [sec]	Departure [sec]	Inter stop time [sec]
NER		0	0
OCT	140	165	140
OCD	316	341	151
COS	411	436	70
FOW	537	562	101
BAS	622	647	60
MDR	712	737	65
PIP	808	833	71
NSA	926	951	93
PSW	1067	1092	116
SHP	1169	1194	77
HAY	1272	1297	78
ROS	1473	1498	176
RAD	1564	1589	66
CRA	1670	1695	81
WGH	1779	1804	84
CRT	1850	1875	46
WGA	1969	1994	94
CAP	2125	2150	131
GRW	2213	2238	63
GRS	2353		115
Total:	2353	39min 13 sec	

All time values +/-10% Tolerance

2.5 Route Granton Square – Newhaven (max. velocity 80km/h)

v = f(s), v_{civ} = f(s), alt = f(s) velocity, civil speed limit and relative altitude as a function of distance

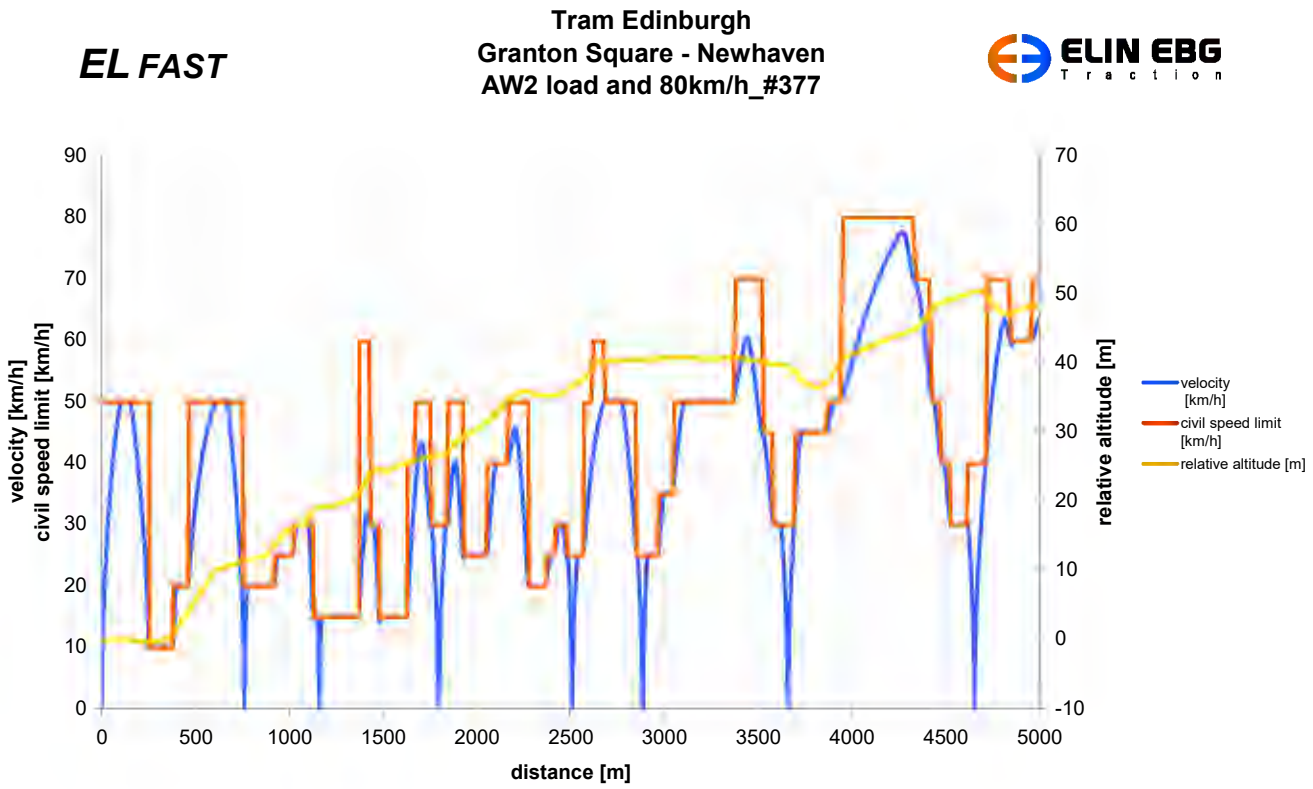

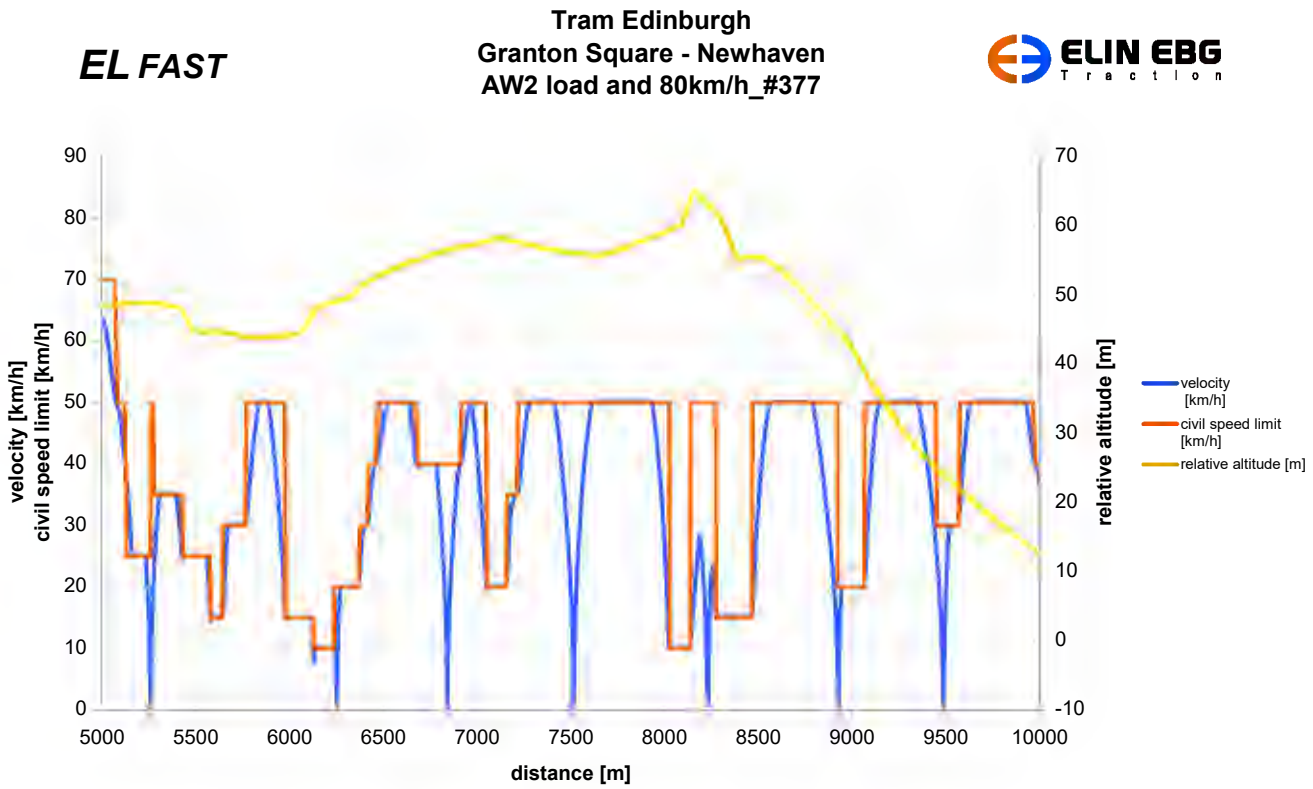

EL FAST

Tram Edinburgh
Granton Square - Newhaven
AW2 load and 80km/h_#377

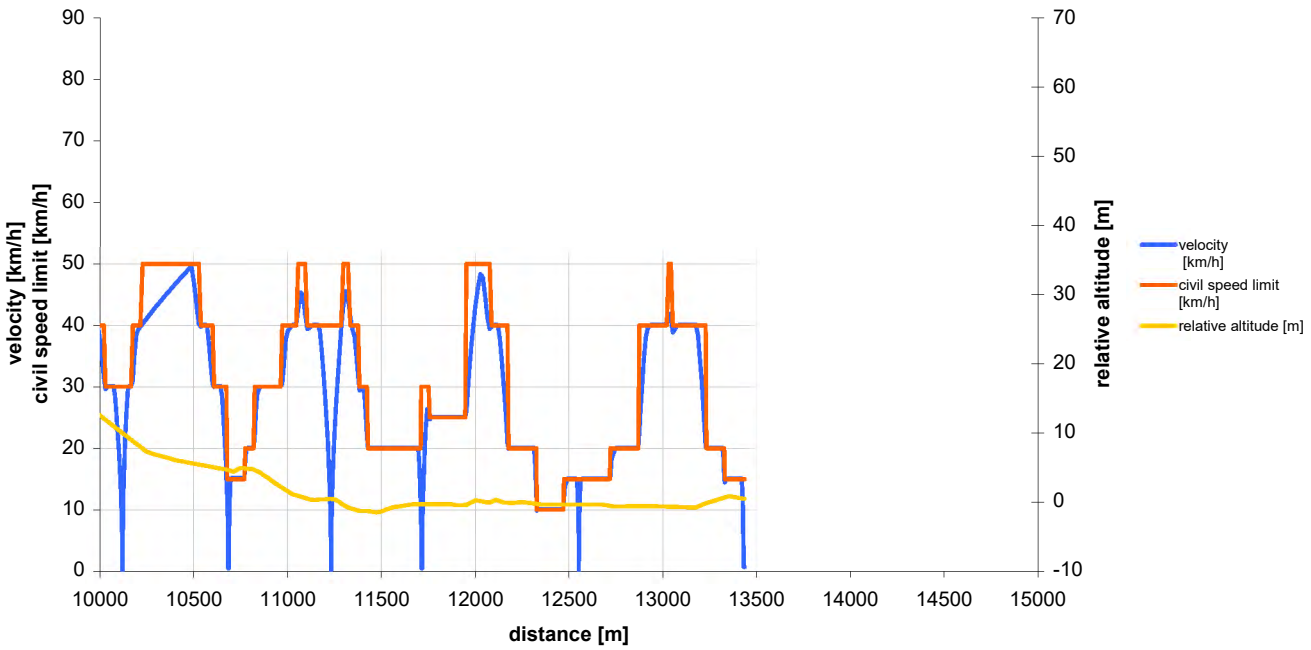

Station	Arrival [sec]	Departure [sec]	Inter stop time [sec]
GRS		0	
GRW	124	149	124
CAP	220	245	71
WGA	372	397	127
CRT	496	521	99
WGH	567	592	46
CRA	670	695	78
RAD	778	803	83
ROS	863	888	60
HAY	1066	1091	178
SHP	1163	1188	72
PSW	1270	1295	82
SSD	1404	1429	109
PIP	1531	1556	102
MDR	1625	1650	69
BAS	1717	1742	67
FOW	1803	1828	61
COS	1908	1933	80
OCD	2013	2038	80
OCT	2199	2224	161
NER	2375		151
Total:	2375	39min 35sec	

All time values +/-10% Tolerance

2.6 Route Ocean Terminal – Edinburgh Airport (max. velocity 80km/h)

v = f(s), v_{civ} = f(s), alt = f(s) velocity, civil speed limit and relative altitude as a function of distance

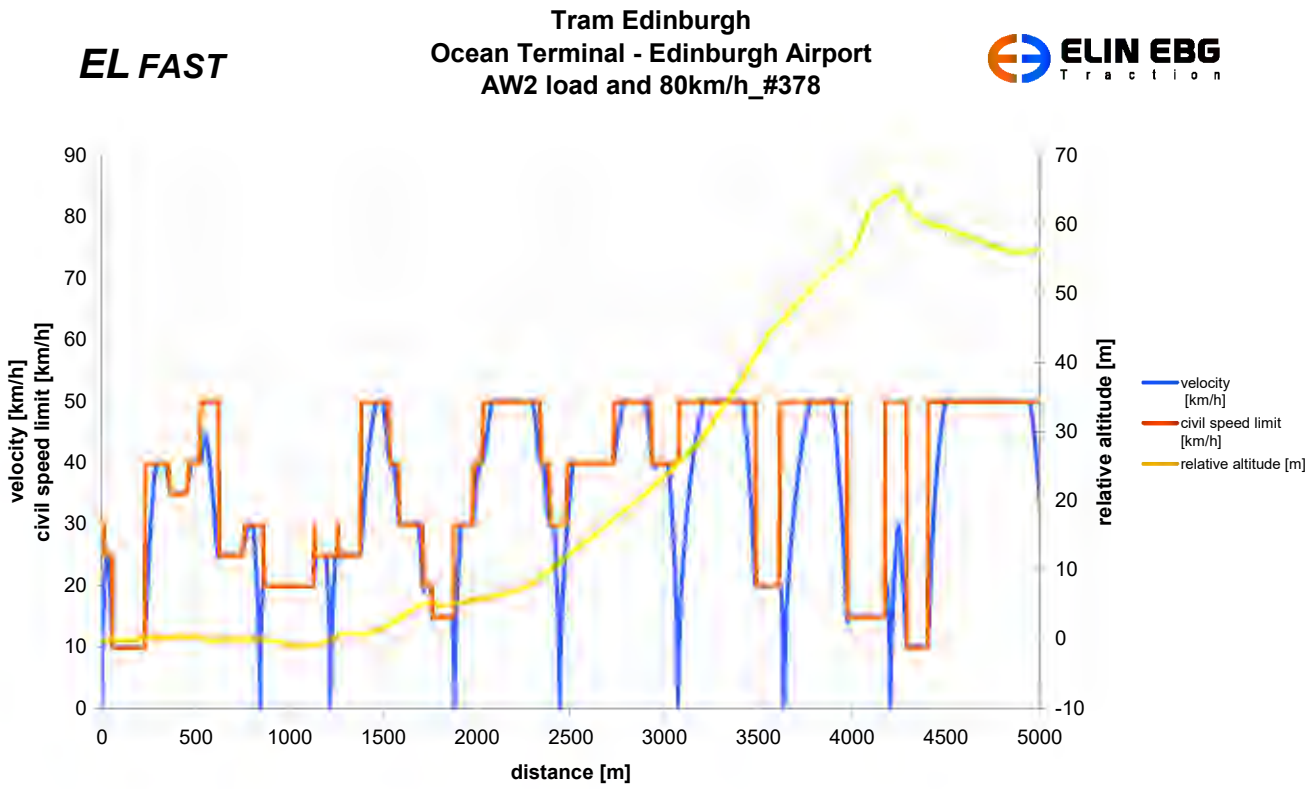

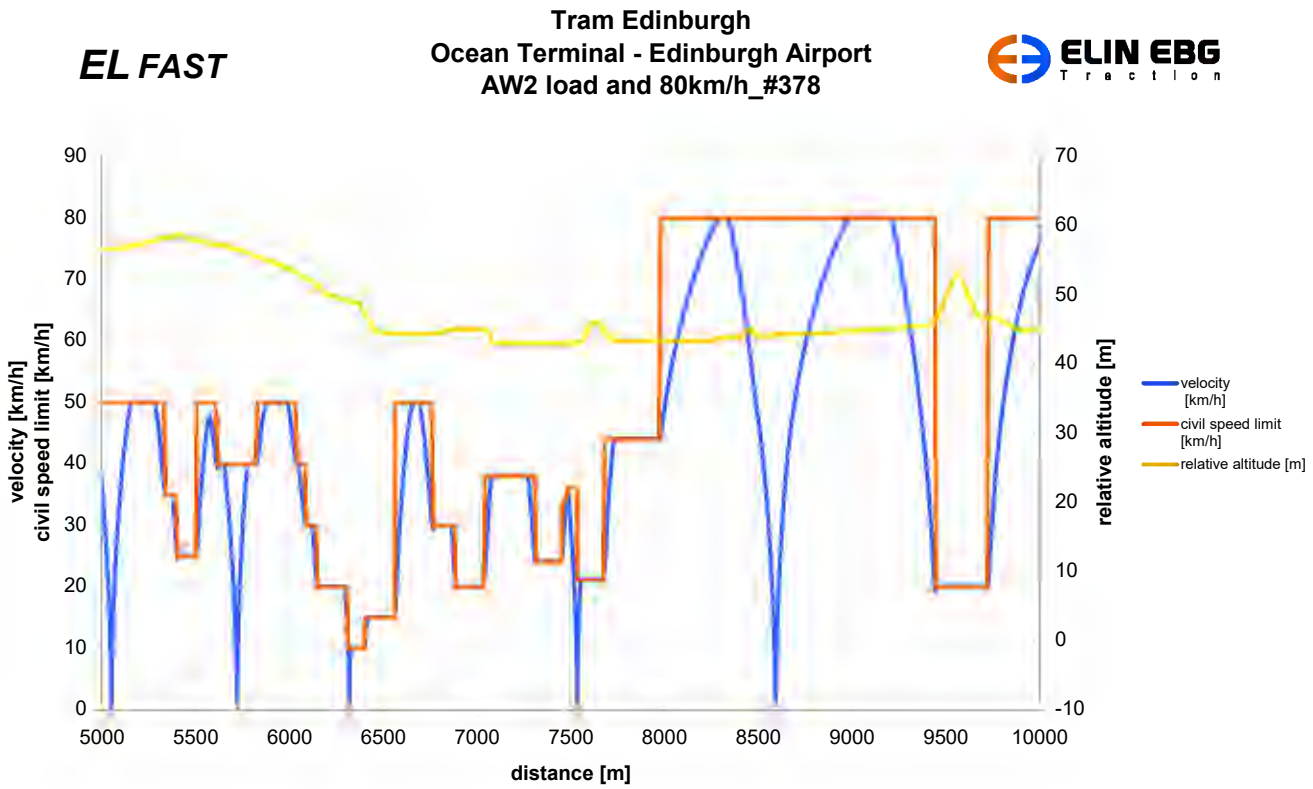

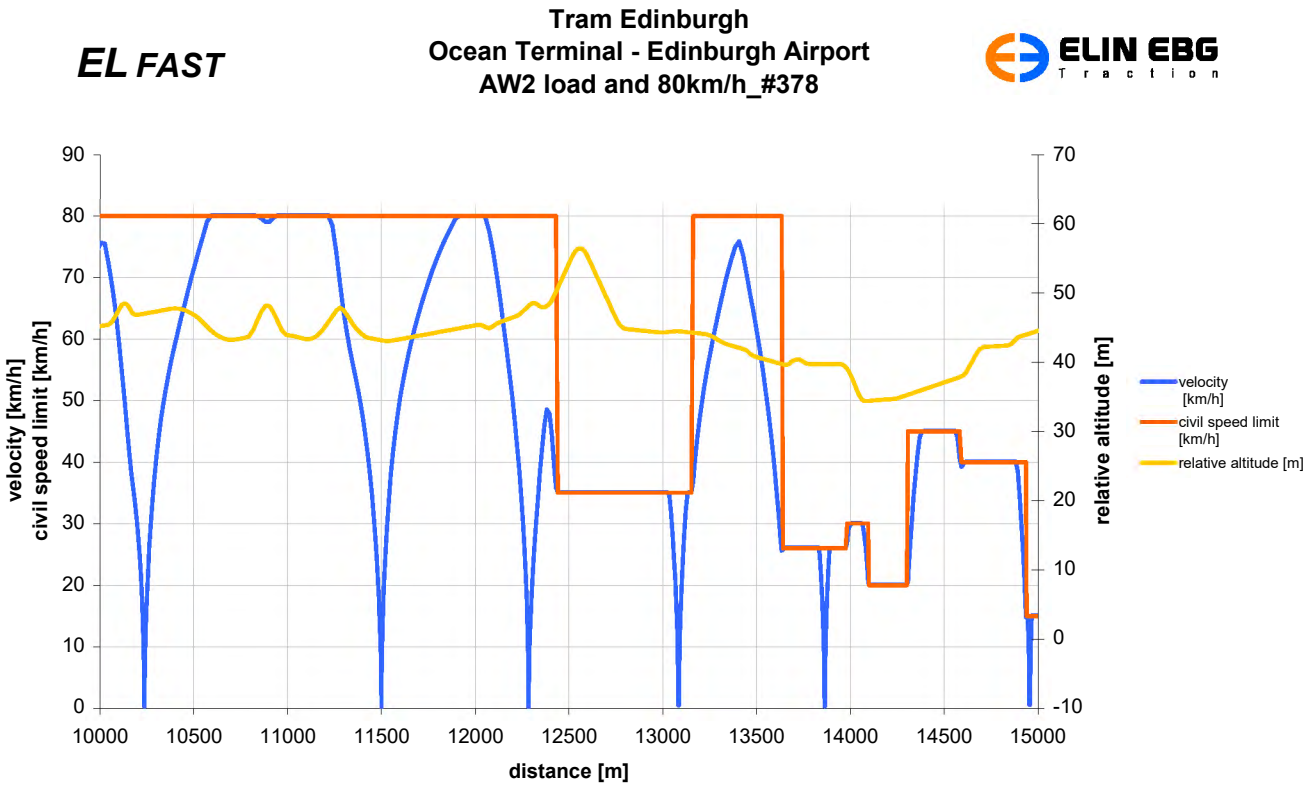
EL FAST
Tram Edinburgh
Ocean Terminal - Edinburgh Airport
AW2 load and 80km/h_#378
ELIN EBG Traction
velocity [km/h]
civil speed limit [km/h]
relative altitude [m]
distance [m]
velocity [km/h]
civil speed limit [km/h]
relative altitude [m]

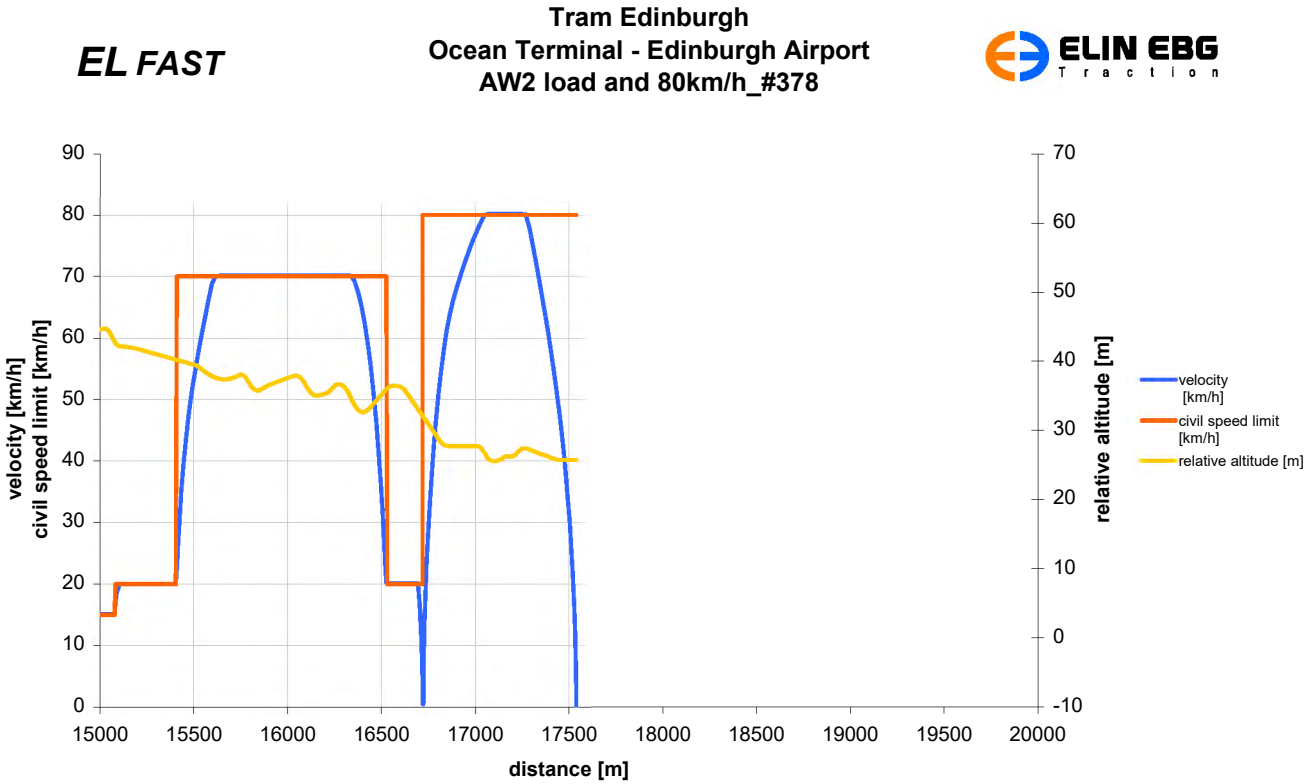
EL FAST
Tram Edinburgh
Ocean Terminal - Edinburgh Airport
AW2 load and 80km/h_#378
ELIN EBG Traction
velocity [km/h]
civil speed limit [km/h]
relative altitude [m]
distance [m]
velocity [km/h]
civil speed limit [km/h]
relative altitude [m]

Station	Arrival [sec]	Departure [sec]	Inter stop time [sec]
OCT		0	0
OCD	151	176	151
COS	248	273	72
FOW	373	398	100
BAS	458	483	60
MDR	549	574	66
PIP	644	669	70
NSA	762	787	93
PSW	903	928	116
SHP	1005	1030	77
HAY	1109	1134	79
MUR	1329	1354	195
BAR	1451	1476	97
SRN	1625	1650	149
SGA	1732	1757	82
EPS	1815	1840	58
EDP	1932	1957	92
GYL	2036	2061	79
GOG	2198	2223	137
IPR	2420	2445	197
AIR	2504		59
Total:	2504	41min 44 sec	

All time values +/-10% Tolerance

2.7 Route Edinburgh Airport - Ocean Terminal (max. velocity 80km/h)

v = f(s), v_{civ} = f(s), alt = f(s) velocity, civil speed limit and relative altitude as a function of distance

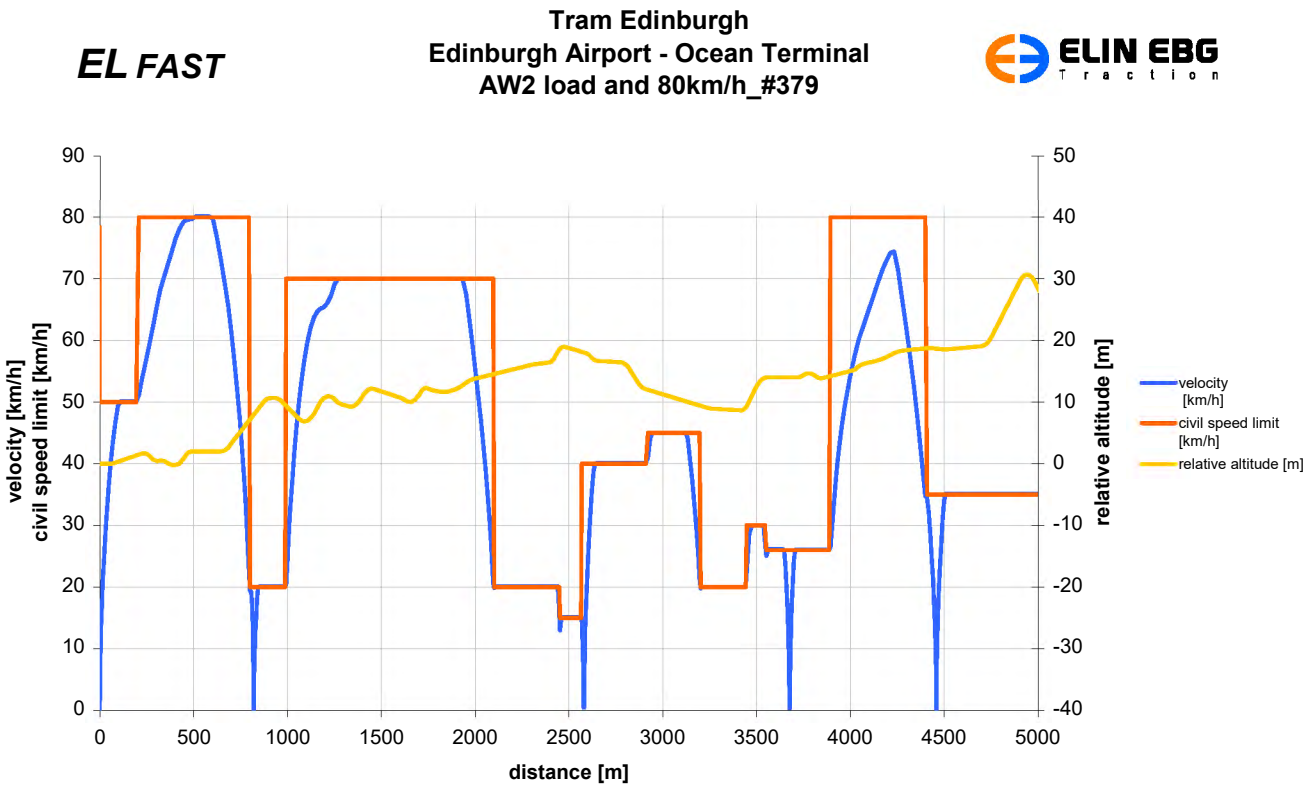

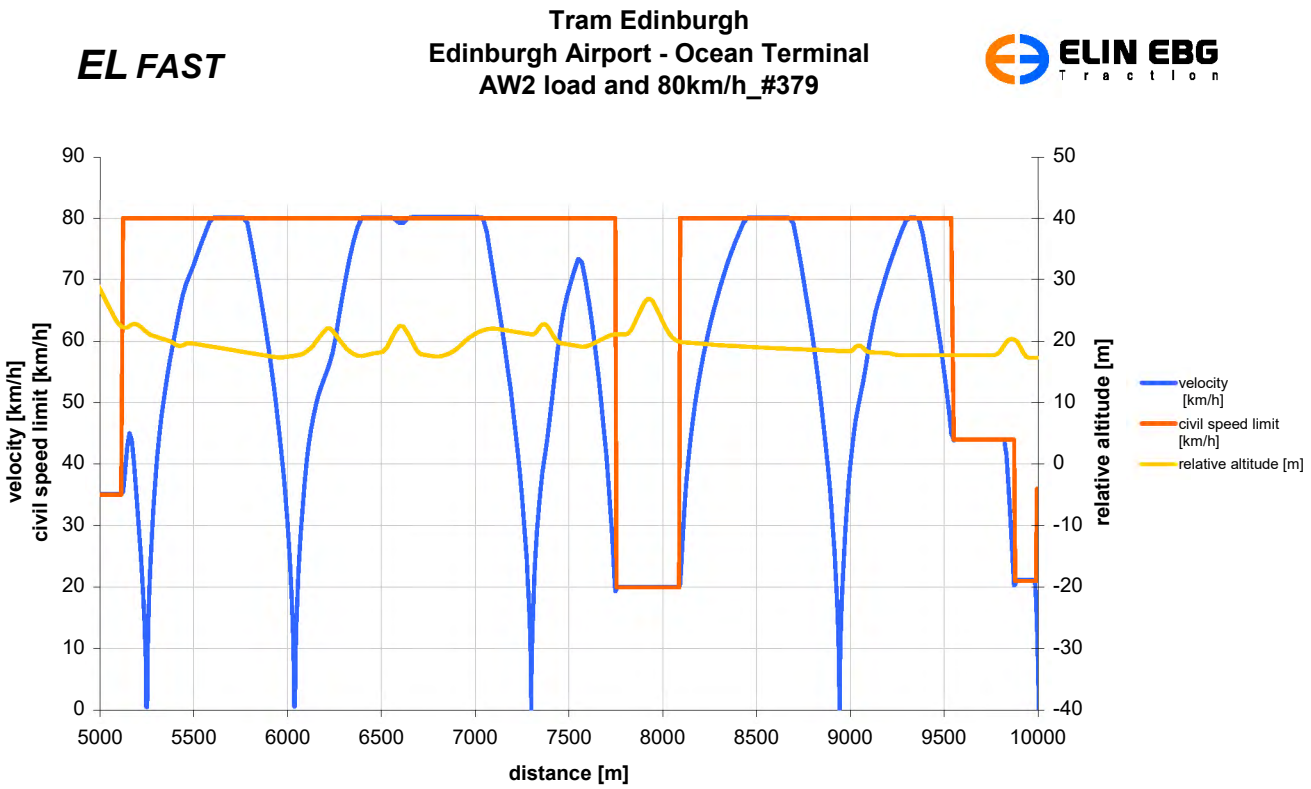

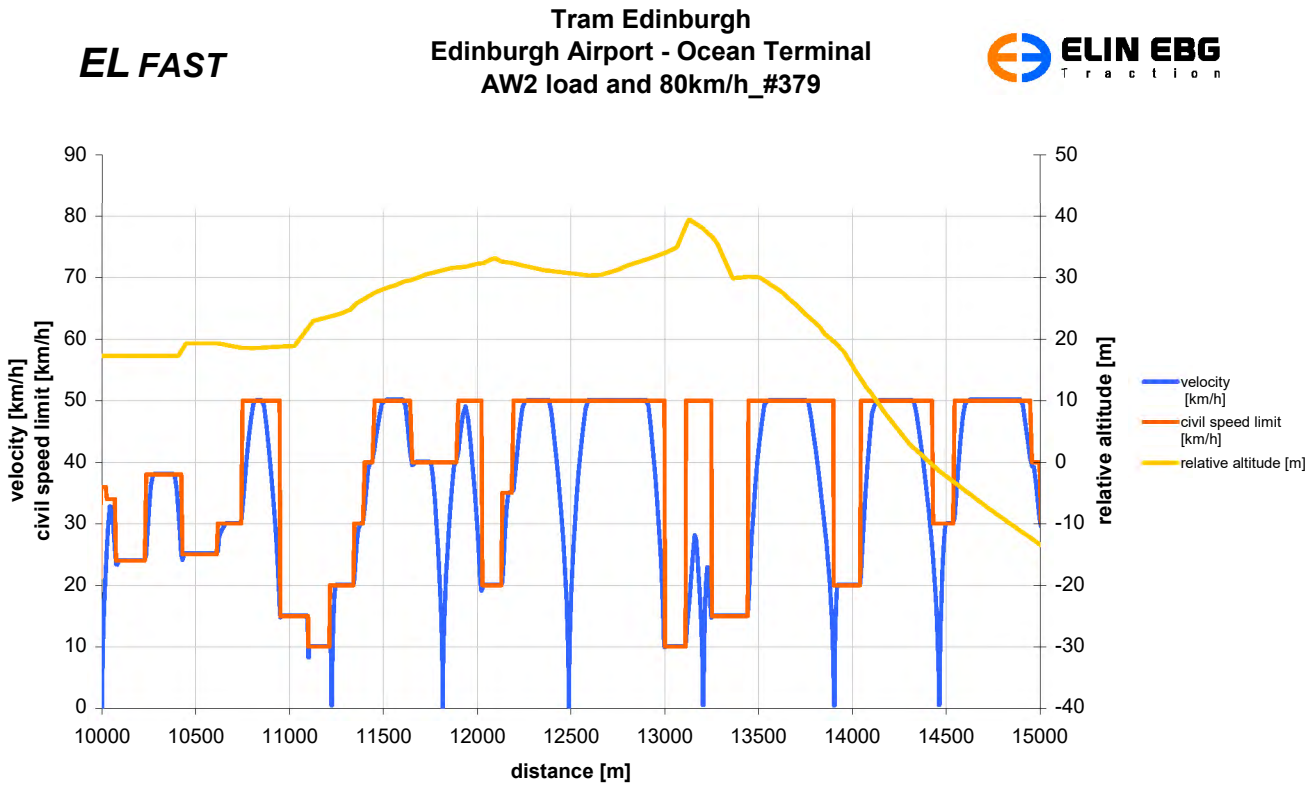
EL FAST
Tram Edinburgh
Edinburgh Airport - Ocean Terminal
AW2 load and 80km/h_#379
ELIN EBG Traction
velocity [km/h]
civil speed limit [km/h]
relative altitude [m]
distance [m]
velocity [km/h]
civil speed limit [km/h]
relative altitude [m]

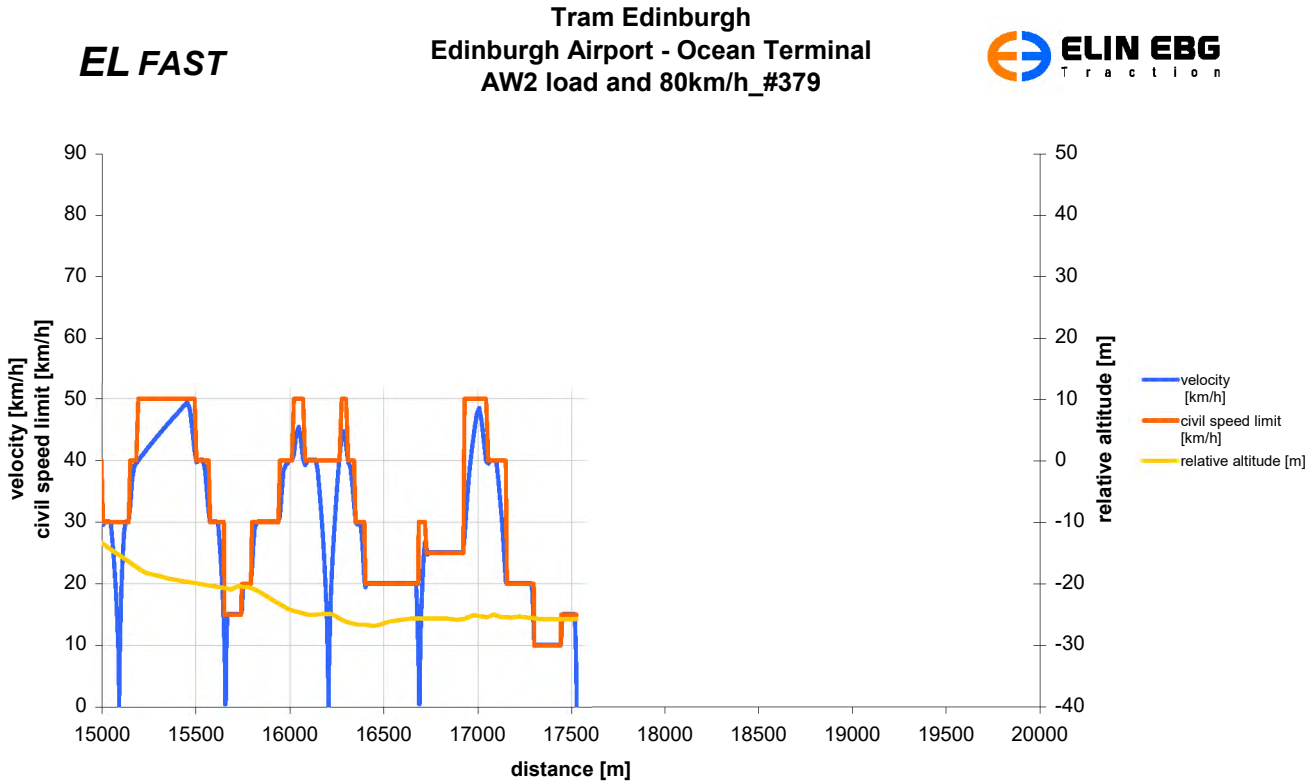
EL FAST
Tram Edinburgh
Edinburgh Airport - Ocean Terminal
AW2 load and 80km/h_#379
ELIN EBG Traction
velocity [km/h]
civil speed limit [km/h]
relative altitude [m]
distance [m]
velocity [km/h]
civil speed limit [km/h]
relative altitude [m]

Station	Arrival [sec]	Departure [sec]	Inter stop time [sec]
AIR		0	
IPR	63	88	63
GOG	287	312	224
GYL	451	476	227
EDP	554	579	327
EPS	671	696	344
SGA	753	778	409
SRN	860	885	451
BAR	1043	1068	592
MUR	1163	1188	571
HAY	1389	1414	818
SHP	1486	1511	668
PSW	1593	1618	925
NSA	1727	1752	802
PIP	1855	1880	1053
MDR	1950	1975	897
BAS	2040	2065	1143
FOW	2127	2152	984
COS	2232	2257	1248
OCD	2336	2361	1088
OCT	2522		1434
Total:	2522	42min 02 sec	

All time values +/-10% Tolerance

2.8 Route Newhaven – Granton Square (max. velocity 70km/h)

v = f(s), v_{civ} = f(s), alt = f(s) velocity, civil speed limit and relative altitude as a function of distance

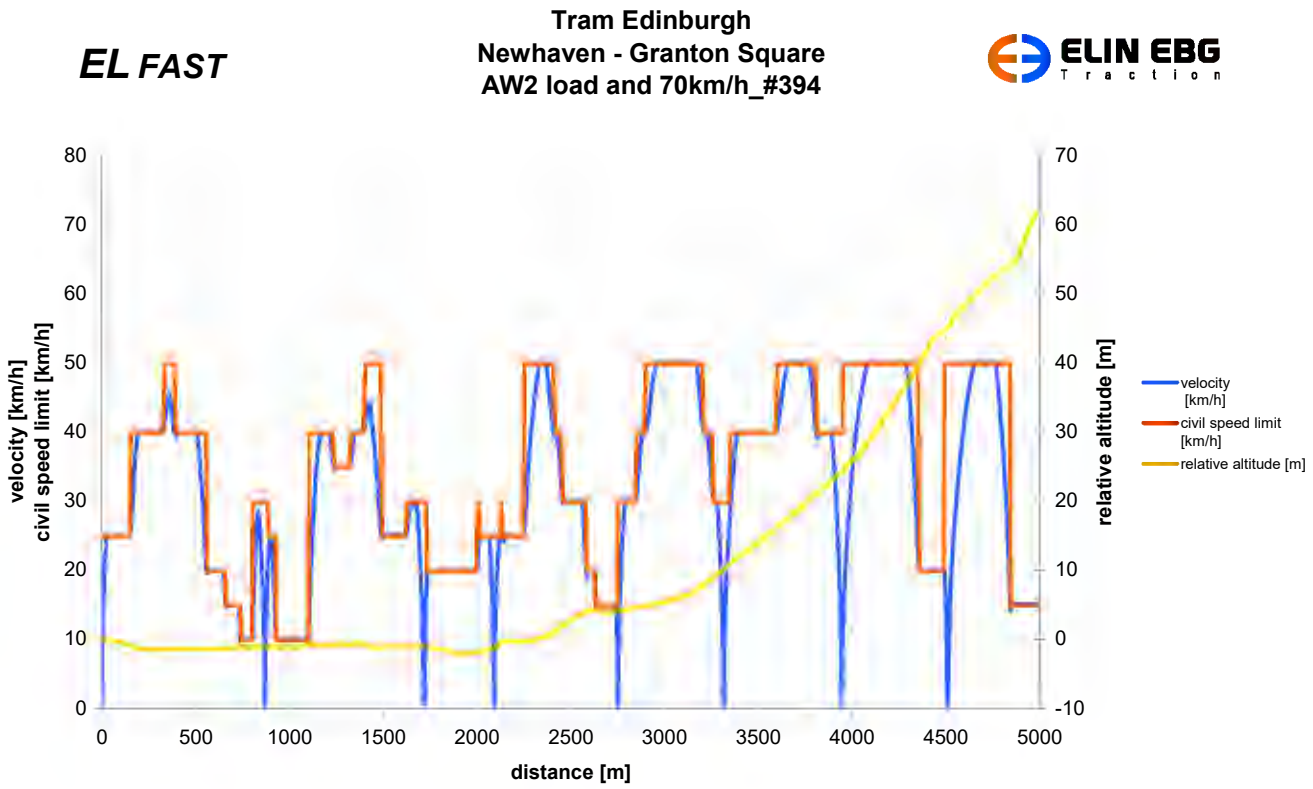

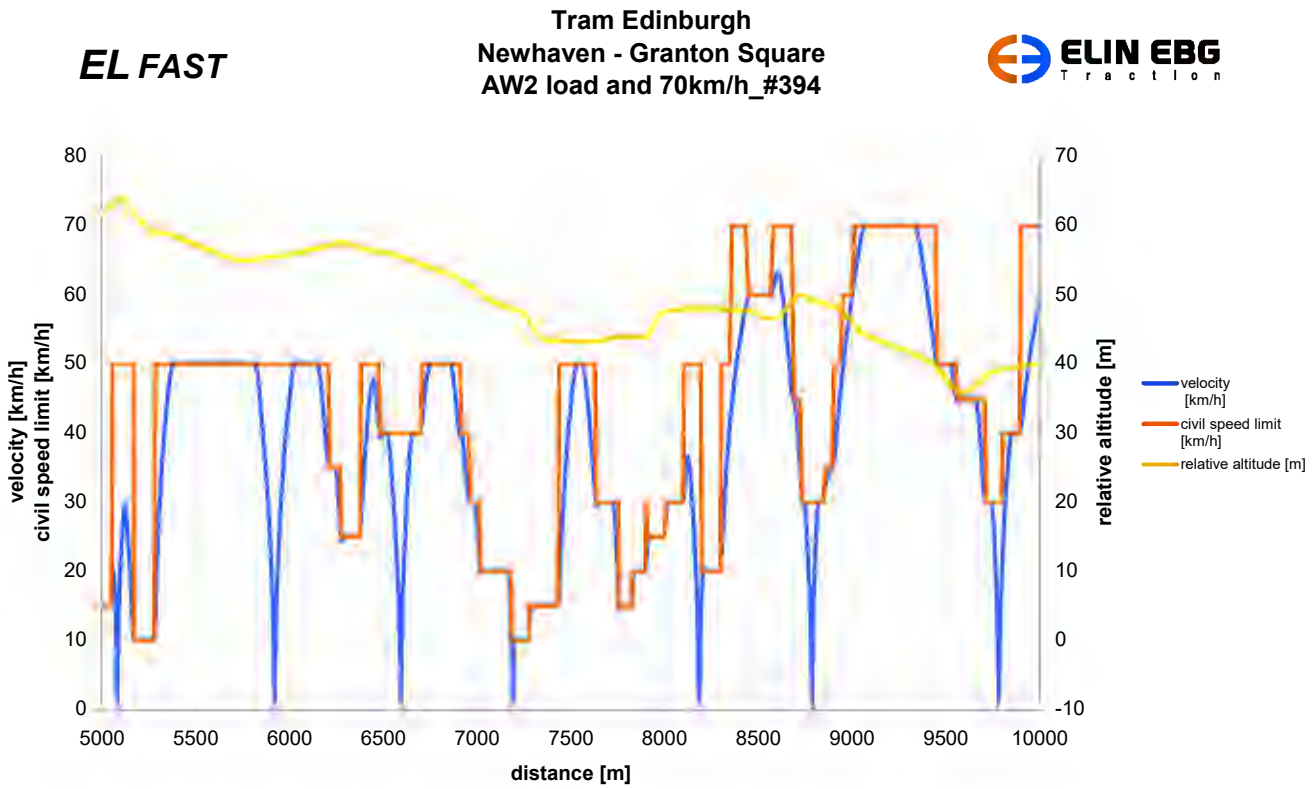

EL FAST

Tram Edinburgh
Newhaven - Granton Square
AW2 load and 70km/h_#394

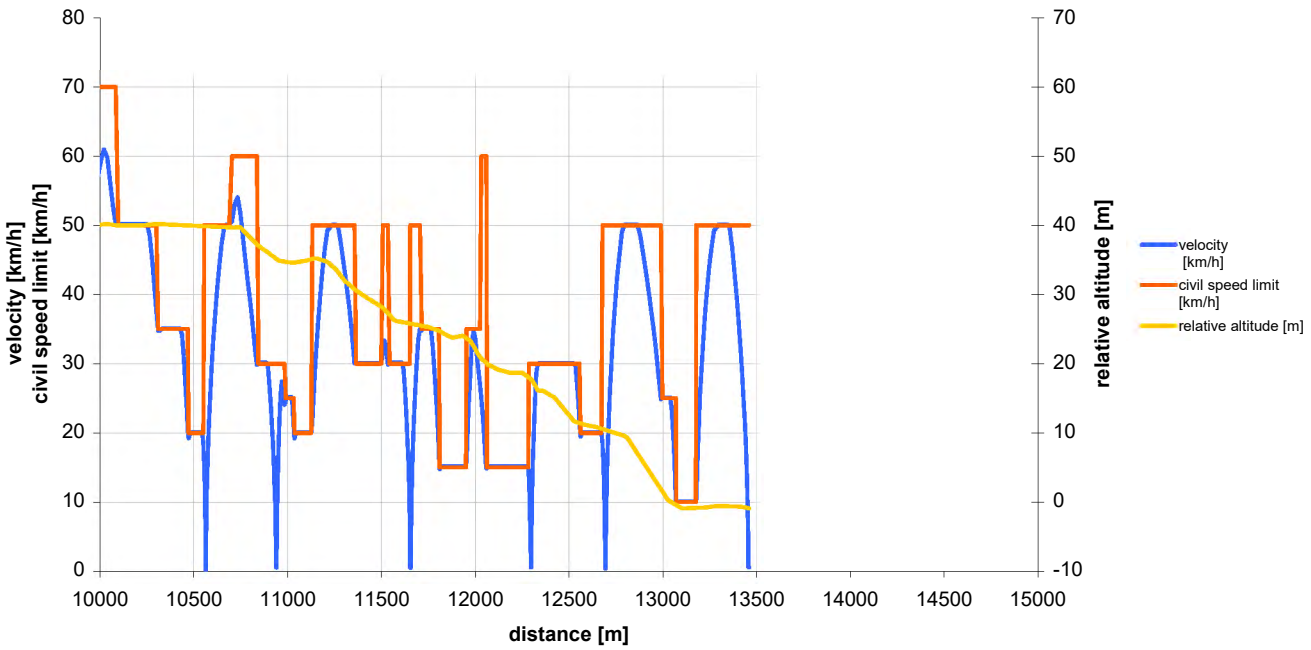

Station	Arrival [sec]	Departure [sec]	Inter stop time [sec]
NER		0	0
OCT	140	165	140
OCD	316	341	151
COS	411	436	70
FOW	537	562	101
BAS	622	647	60
MDR	712	737	65
PIP	808	833	71
NSA	926	951	93
PSW	1067	1092	116
SHP	1169	1194	77
HAY	1272	1297	78
ROS	1473	1498	176
RAD	1564	1589	66
CRA	1672	1697	83
WGH	1780	1805	83
CRT	1851	1876	46
WGA	1970	1995	94
CAP	2126	2151	131
GRW	2214	2239	63
GRS	2355		116
Total:	2355	39min 15 sec	

All time values +/-10% Tolerance

2.9 Route Granton Square – Newhaven (max. velocity 70km/h)

v = f(s), v_{civ} = f(s), alt = f(s) velocity, civil speed limit and relative altitude as a function of distance

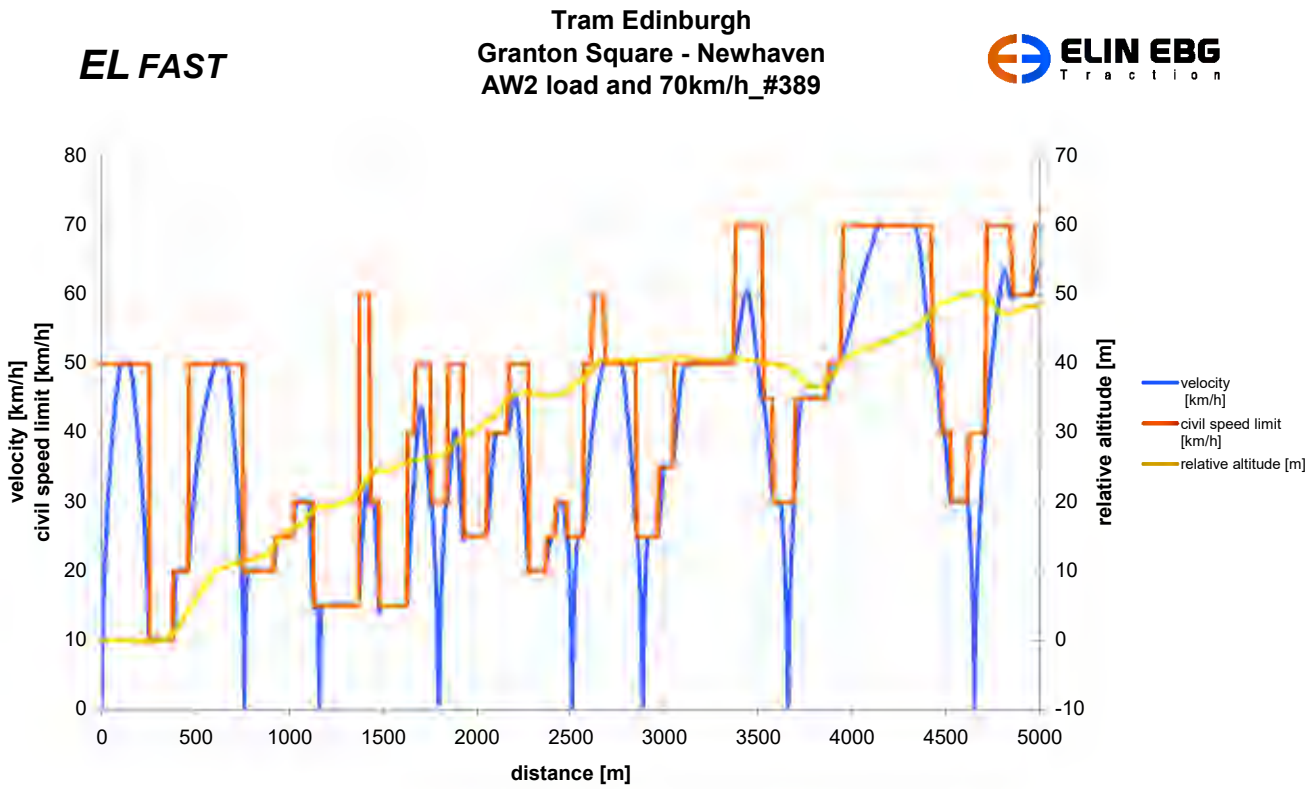

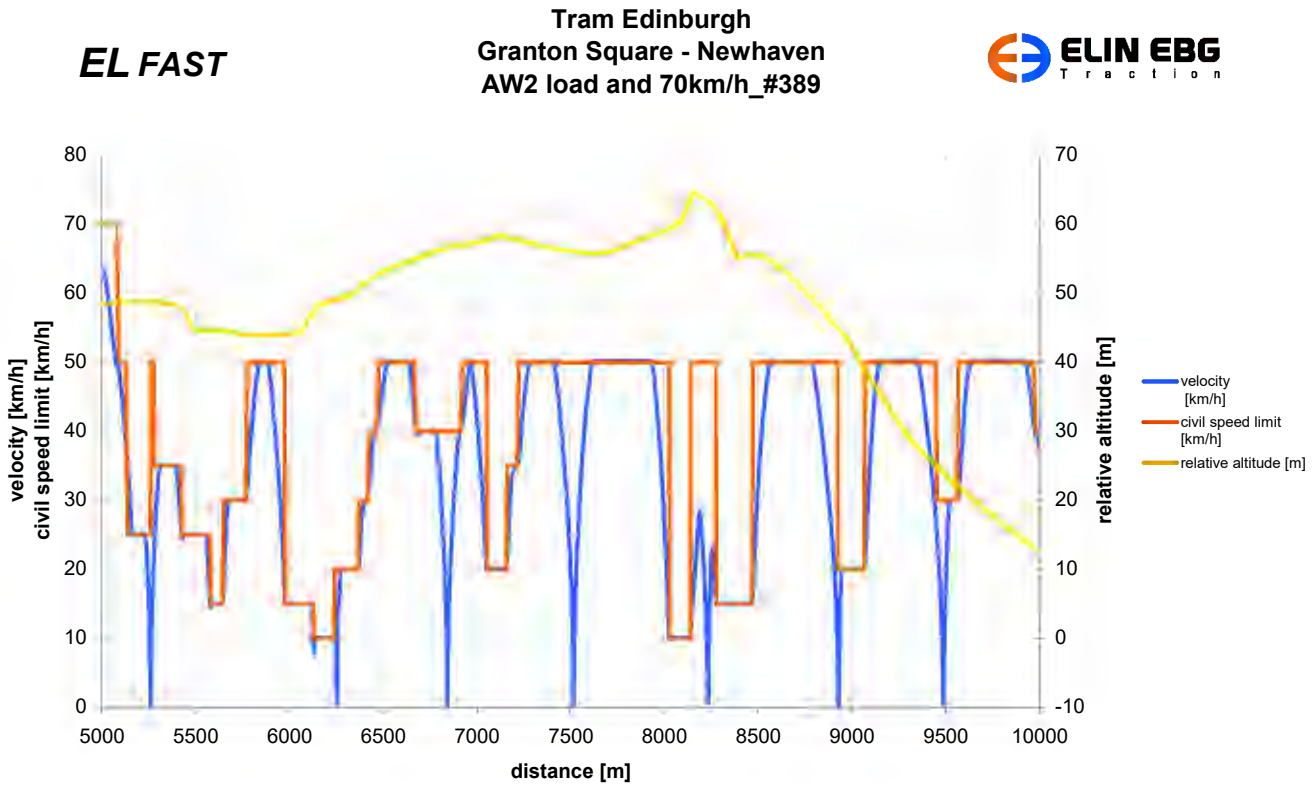

EL FAST

Tram Edinburgh
Granton Square - Newhaven
AW2 load and 70km/h_#389

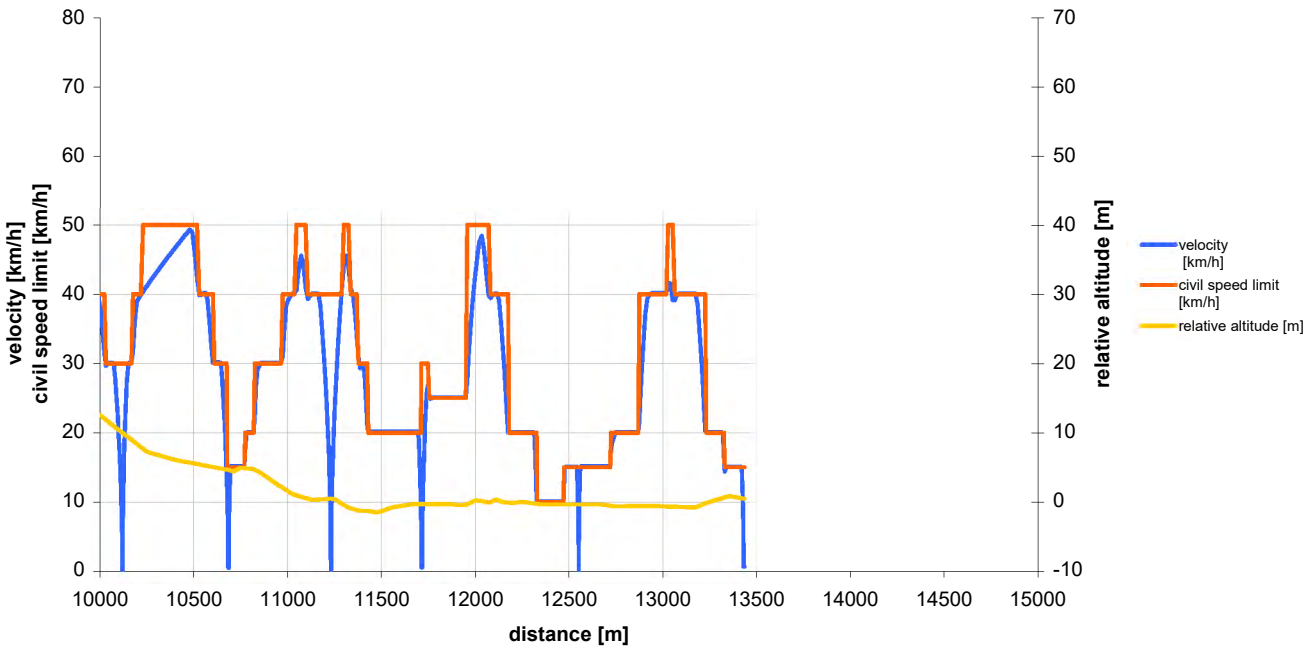

Station	Arrival [sec]	Departure [sec]	Inter stop time [sec]
GRS		0	
GRW	124	149	124
CAP	220	245	71
WGA	372	397	127
CRT	496	521	99
WGH	567	592	46
CRA	670	695	78
RAD	778	803	83
ROS	863	888	60
HAY	1067	1092	179
SHP	1164	1189	72
PSW	1271	1296	82
SSD	1405	1430	109
PIP	1532	1557	102
MDR	1627	1652	70
BAS	1718	1743	66
FOW	1804	1829	61
COS	1909	1934	80
OCD	2014	2039	80
OCT	2199	2224	160
NER	2376		152
Total:	2375	39min 36sec	

All time values +/-10% Tolerance

2.10 Route Ocean Terminal – Edinburgh Airport (max. velocity 70km/h)

v = f(s), v_{civ} = f(s), alt = f(s) velocity, civil speed limit and relative altitude as a function of distance

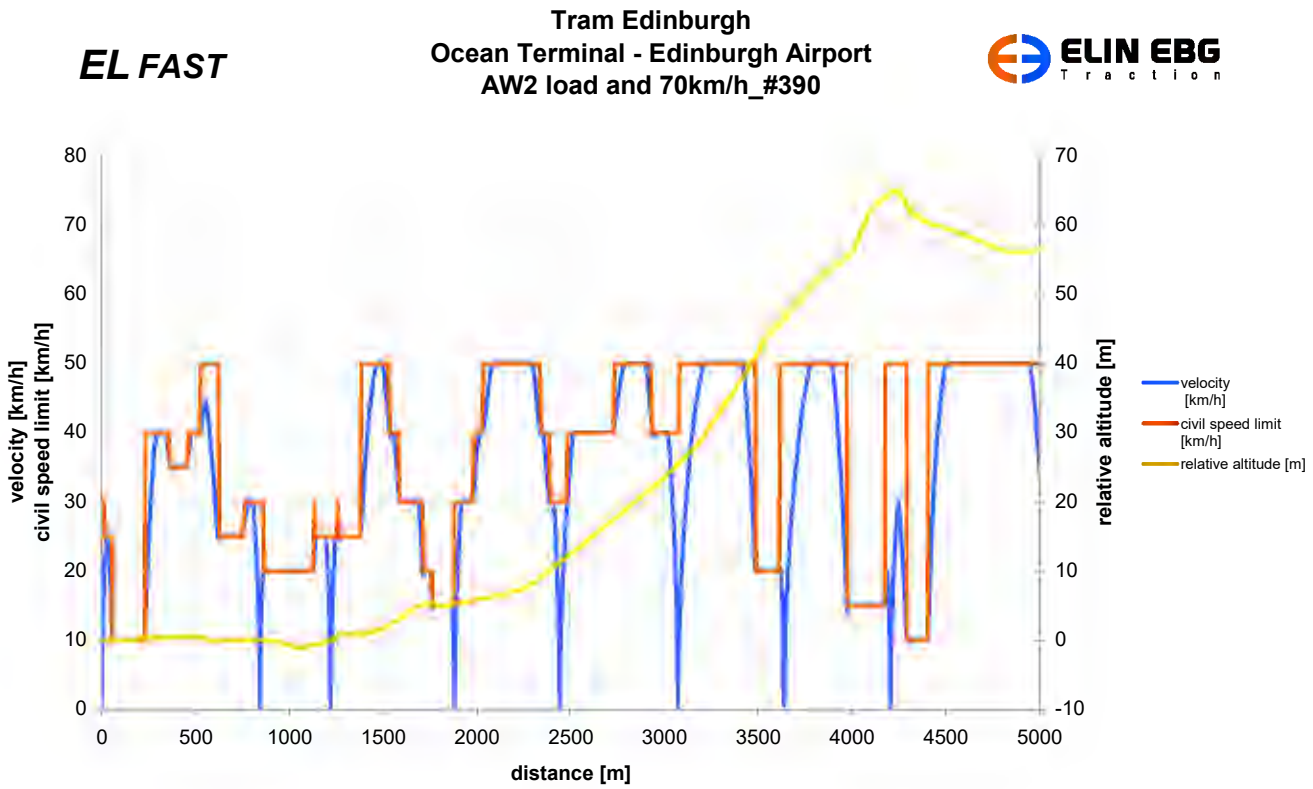

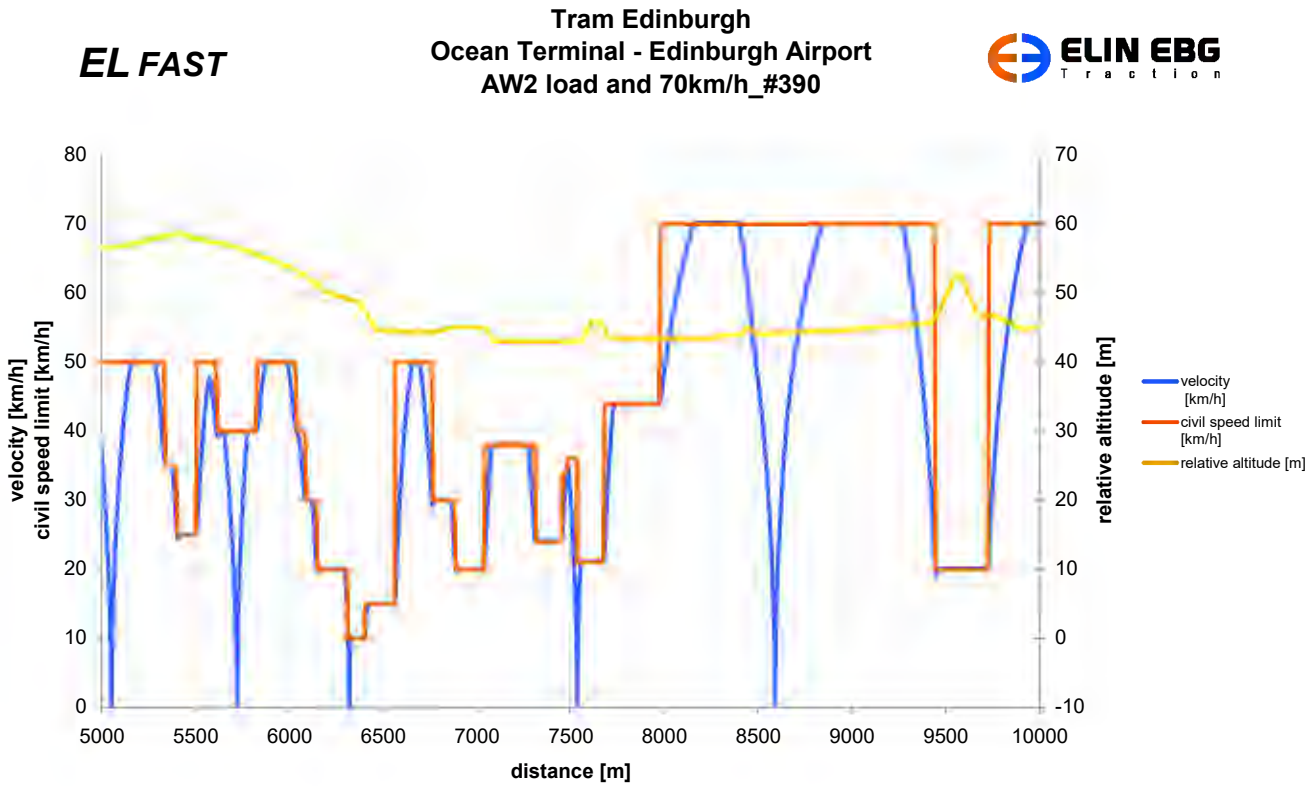

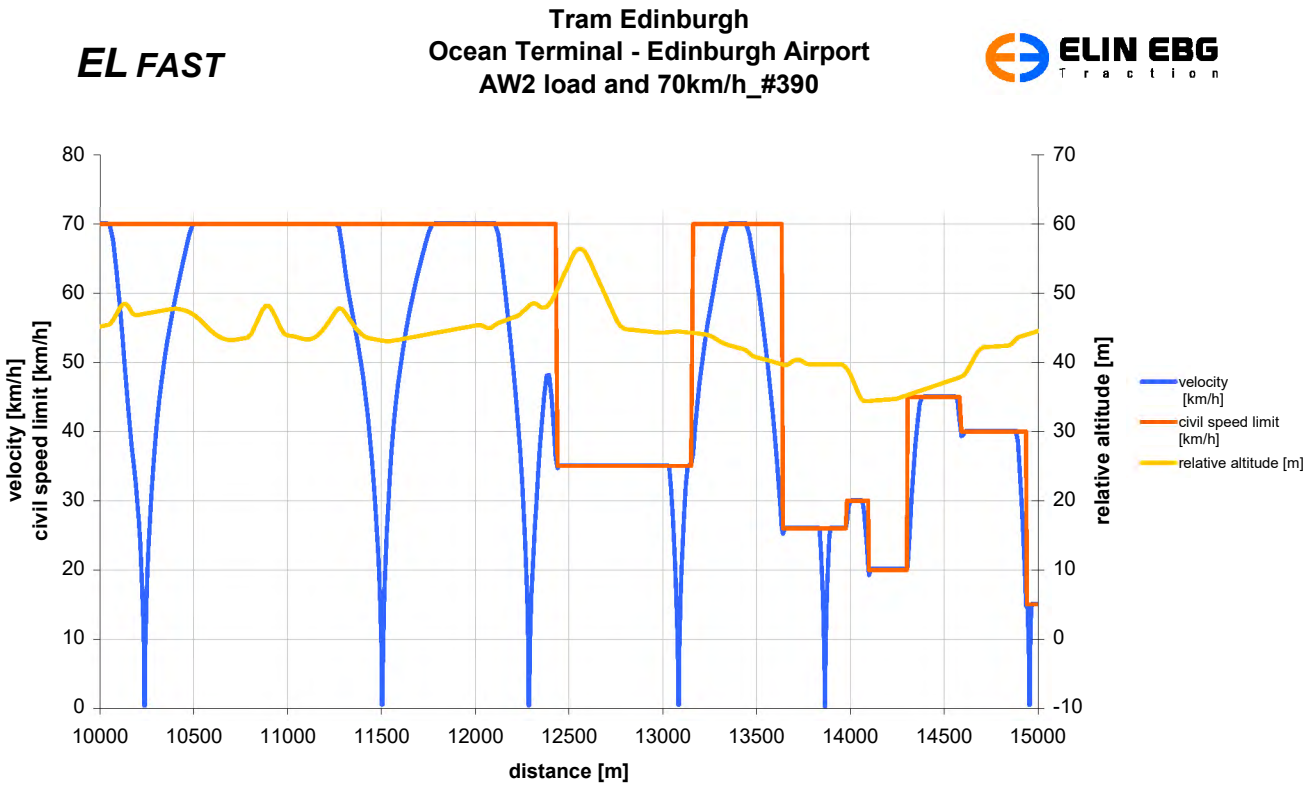
EL FAST
Tram Edinburgh
Ocean Terminal - Edinburgh Airport
AW2 load and 70km/h_#390
ELIN EBG Traction
velocity [km/h]
civil speed limit [km/h]
relative altitude [m]
distance [m]
velocity [km/h]
civil speed limit [km/h]
relative altitude [m]

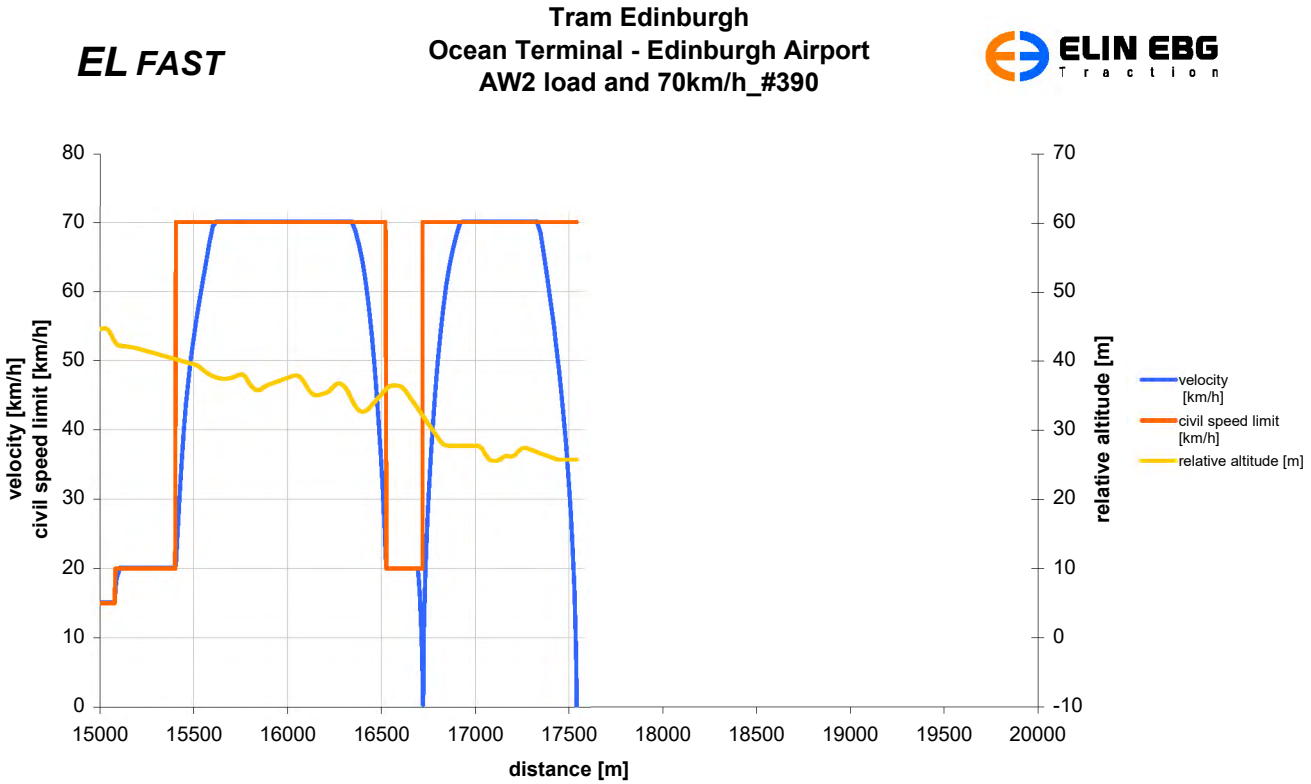
EL FAST
Tram Edinburgh
Ocean Terminal - Edinburgh Airport
AW2 load and 70km/h_#390
ELIN EBG Traction
velocity [km/h]
civil speed limit [km/h]
relative altitude [m]
distance [m]
velocity [km/h]
civil speed limit [km/h]
relative altitude [m]

Station	Arrival [sec]	Departure [sec]	Inter stop time [sec]
OCT		0	0
OCD	151	176	151
COS	248	273	72
FOW	373	398	100
BAS	458	483	60
MDR	549	574	66
PIP	644	669	70
NSA	762	787	93
PSW	903	928	116
SHP	1005	1030	77
HAY	1109	1134	79
MUR	1329	1354	195
BAR	1452	1477	98
SRN	1629	1654	152
SGA	1740	1765	86
EPS	1824	1849	59
EDP	1941	1966	92
GYL	2045	2070	79
GOG	2207	2232	137
IPR	2429	2454	197
AIR	2515		61
Total:	2515	41min 55 sec	

All time values +/-10% Tolerance

2.11 Route Edinburgh Airport - Ocean Terminal (max. velocity 70km/h)

v = f(s), v_{civ} = f(s), alt = f(s) velocity, civil speed limit and relative altitude as a function of distance

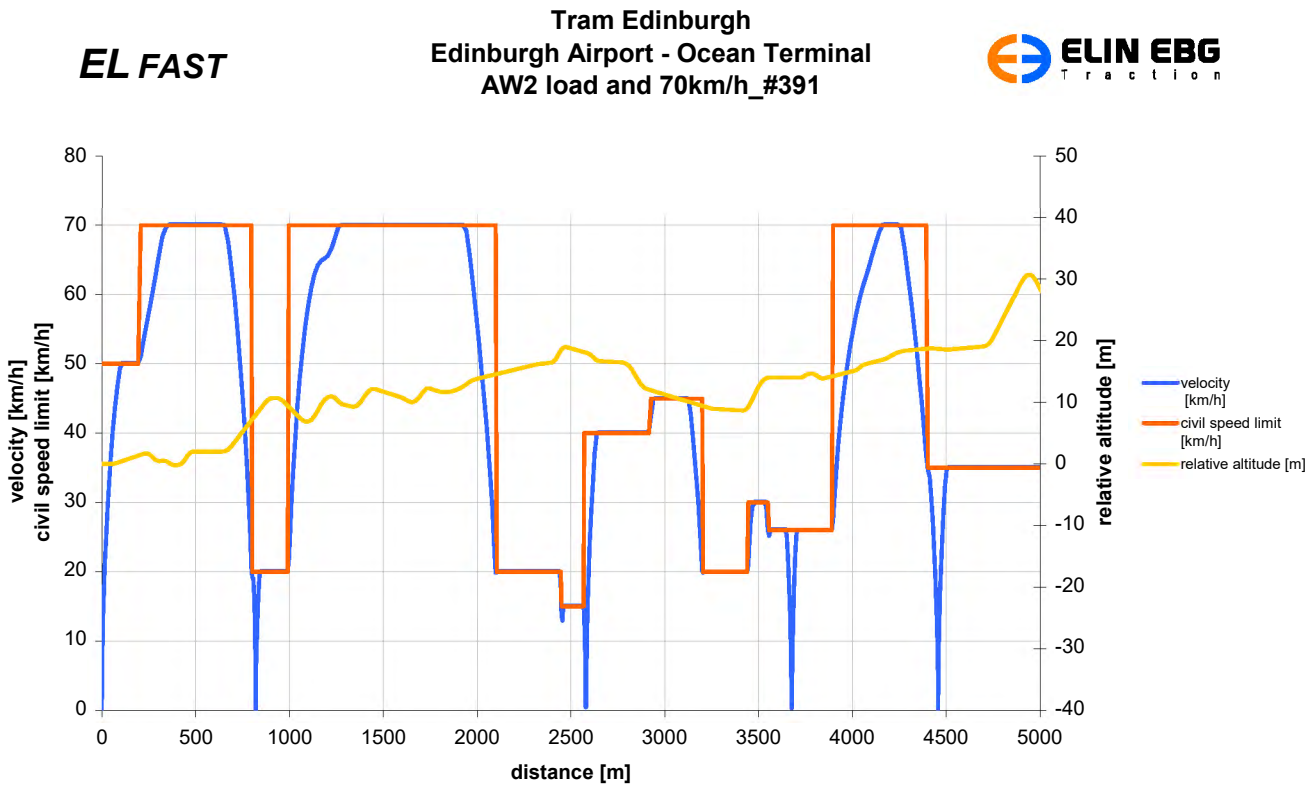

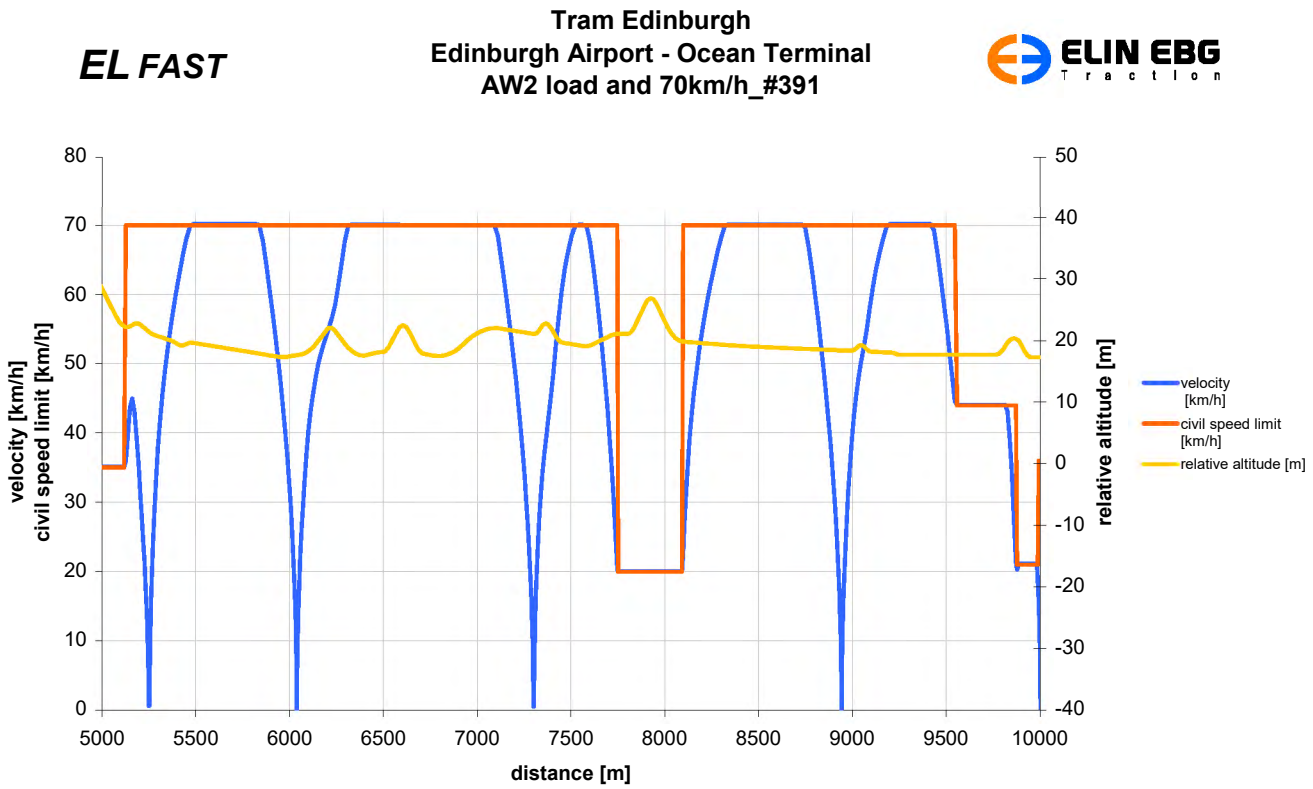

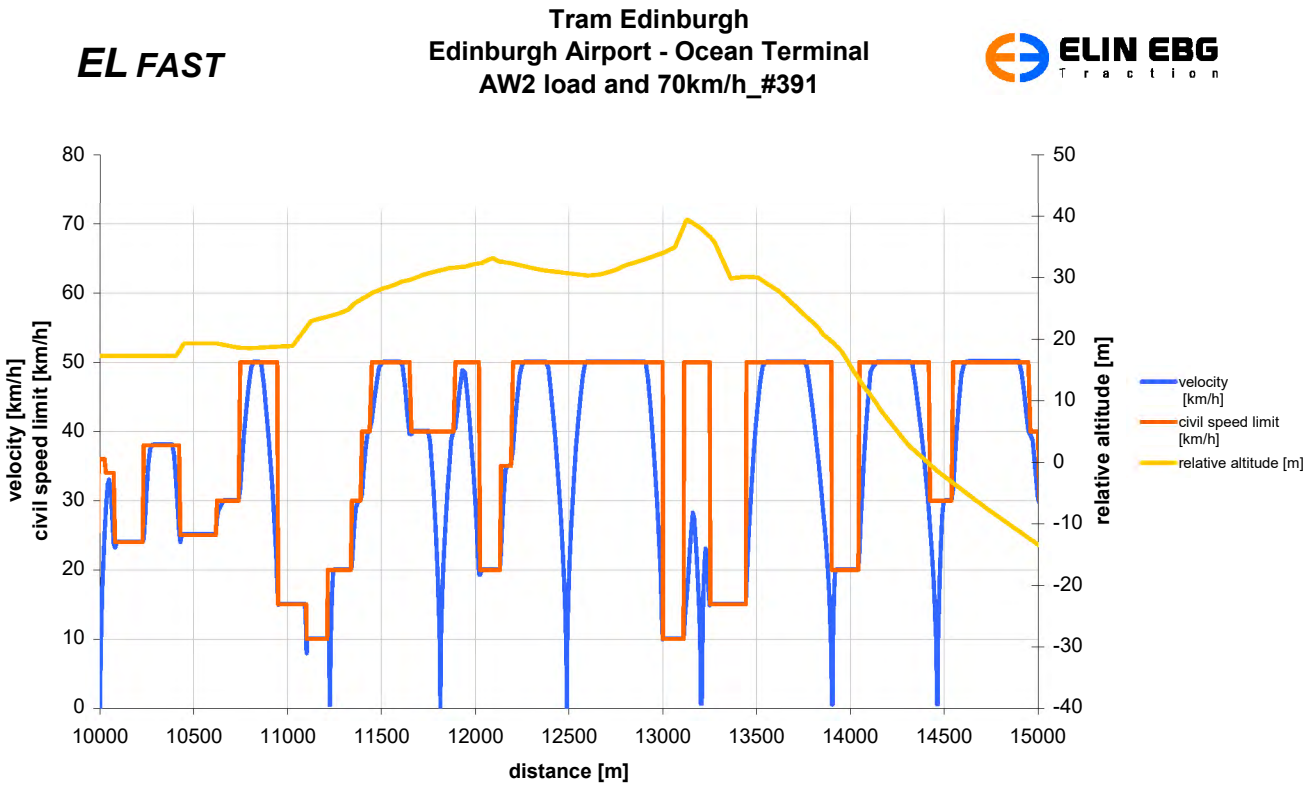
EL FAST
Tram Edinburgh
Edinburgh Airport - Ocean Terminal
AW2 load and 70km/h_#391
ELIN EBG Traction
velocity [km/h]
civil speed limit [km/h]
relative altitude [m]
distance [m]
velocity [km/h]
civil speed limit [km/h]
relative altitude [m]

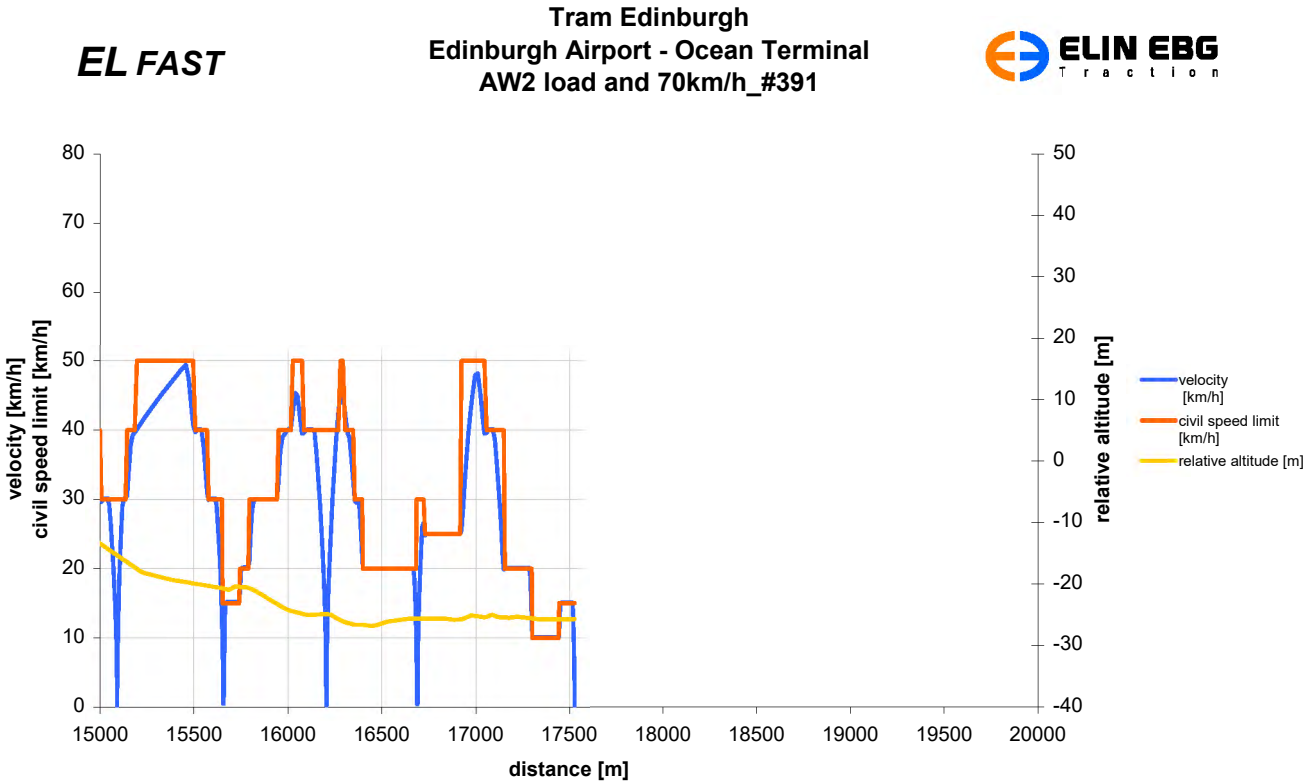
EL FAST
Tram Edinburgh
Edinburgh Airport - Ocean Terminal
AW2 load and 70km/h_#391
ELIN EBG Traction
velocity [km/h]
civil speed limit [km/h]
relative altitude [m]
distance [m]
velocity [km/h]
civil speed limit [km/h]
relative altitude [m]

Station	Arrival [sec]	Departure [sec]	Inter stop time [sec]
AIR		0	
IPR	64	89	64
GOG	288	313	224
GYL	452	477	228
EDP	556	581	328
EPS	672	697	344
SGA	757	782	413
SRN	869	894	456
BAR	1053	1078	597
MUR	1174	1199	577
HAY	1401	1426	824
SHP	1497	1522	673
PSW	1605	1630	932
NSA	1738	1763	806
PIP	1866	1891	1060
MDR	1961	1986	901
BAS	2051	2076	1150
FOW	2137	2162	987
COS	2242	2267	1255
OCD	2347	2372	1092
OCT	2533		1441
Total:	2533	42min 13 sec	

All time values +/-10% Tolerance

3 Dynamic simulations with 100% propulsion

The vehicle consists of three motor bogies and one trailer bogie. The following simulations were made under the assumption that all three available propulsion systems are working properly.

3.1 Parameters for dynamic simulation

Catenary voltage for simulation:	750 VDC
Maximum velocity	80 km/h
Max. wheel diameter:	590 mm
Adhesion coefficient (traction):	min 0,17
Adhesion coefficient (braking):	min 0,18
Rotating mass	4,11 tons
Parameters for all simulations:	see section 1.1

The dynamic behaviour is investigated at loads of 73,312 tons (AW2 load) of 79,657 tons (AW4 load) and different gradients 0% and 8,0%.

3.2 Tractive force diagram at AW4 load and braking force diagram at AW2 load

Following diagrams show the maximum tractive and braking forces for the performance simulations. For loadings bellow AW4 (tractive force) and AW2 (braking force) the forces will be reduced for comfort reasons (limiting of max. acceleration).
The maximum tractive and braking forces are only given by full elevation of the master controller.
In the case of exceptional operation (66% propulsion available and towing) the tractive and braking forces will be adapted by activating a switch on the drivers desk (speed limitation 40 km/h).

F = f(v) tractive force as a function of velocity

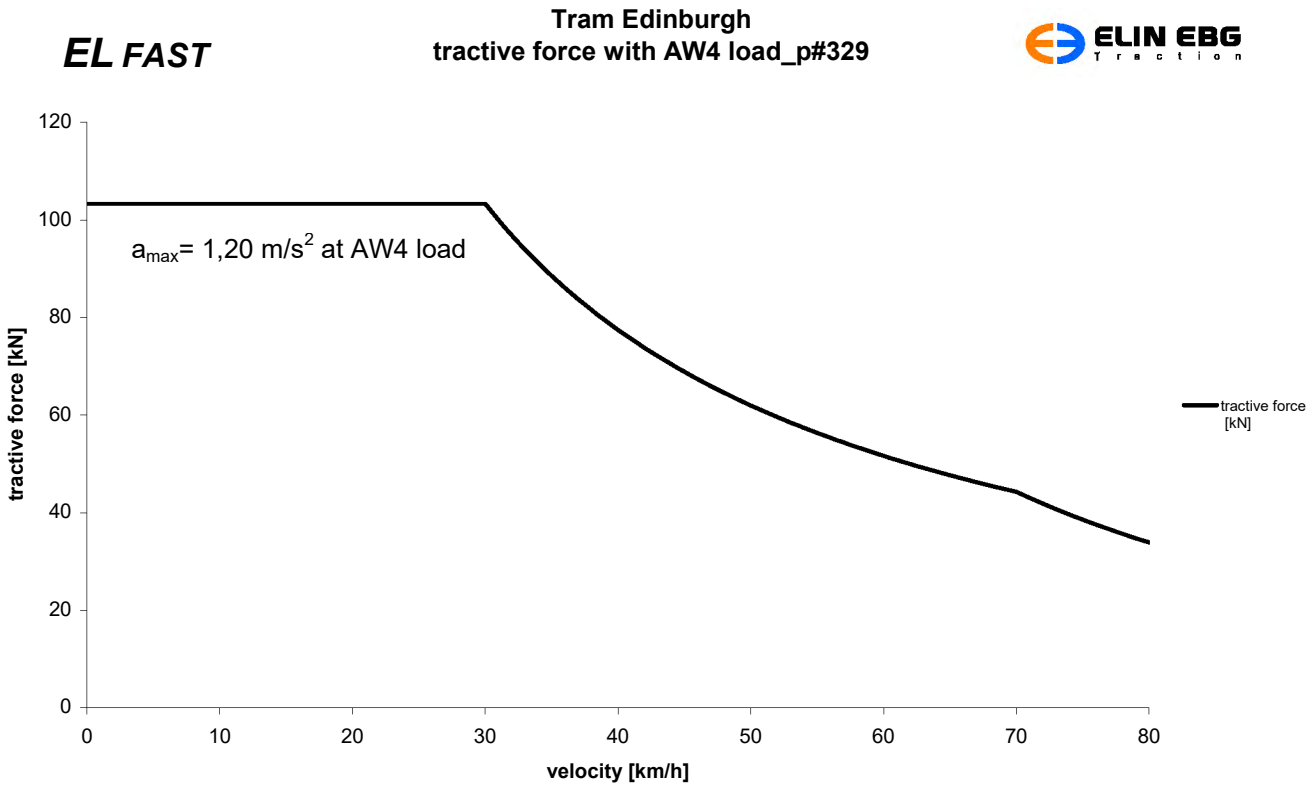

F = f(v) braking force as a function of velocity

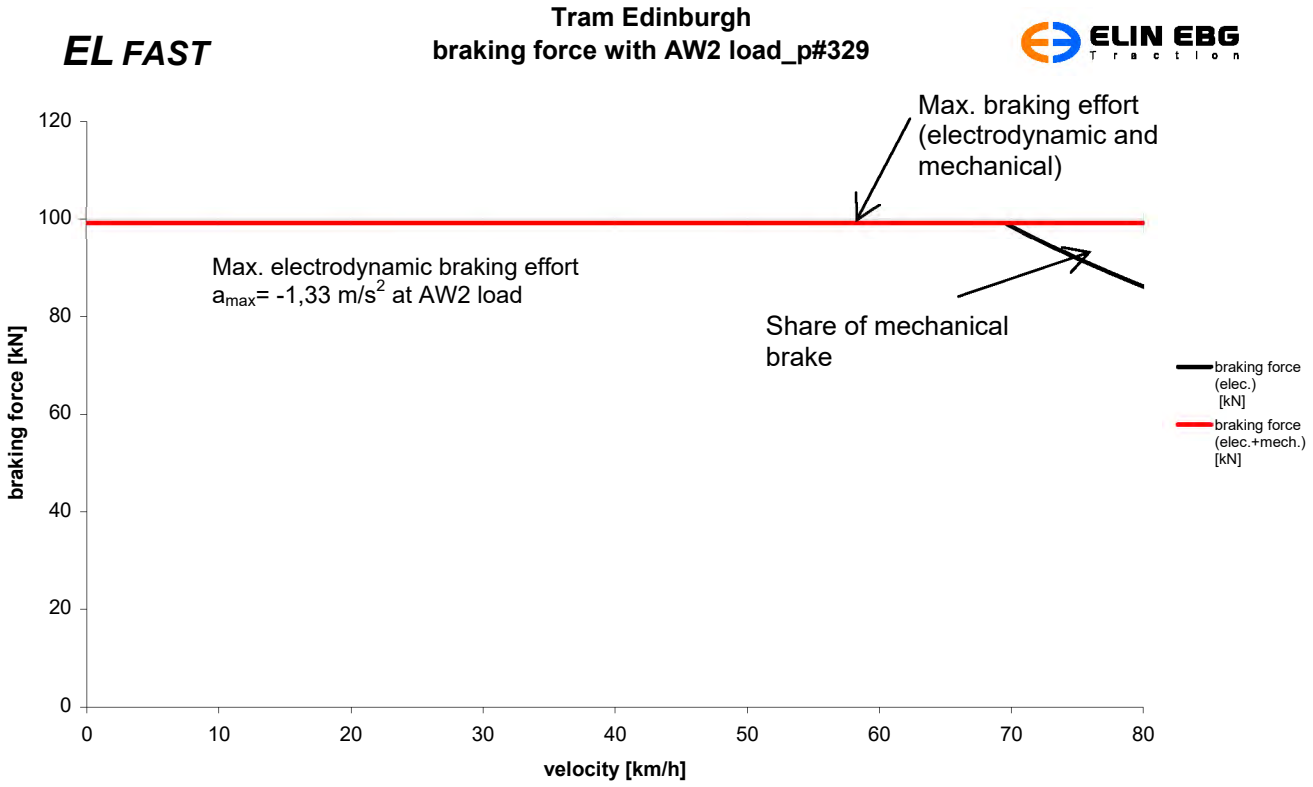

3.3 Accelerations with AW4 load and 0% gradient

v = f(t), a = f(t) velocity, acceleration and mean acceleration as a function of time

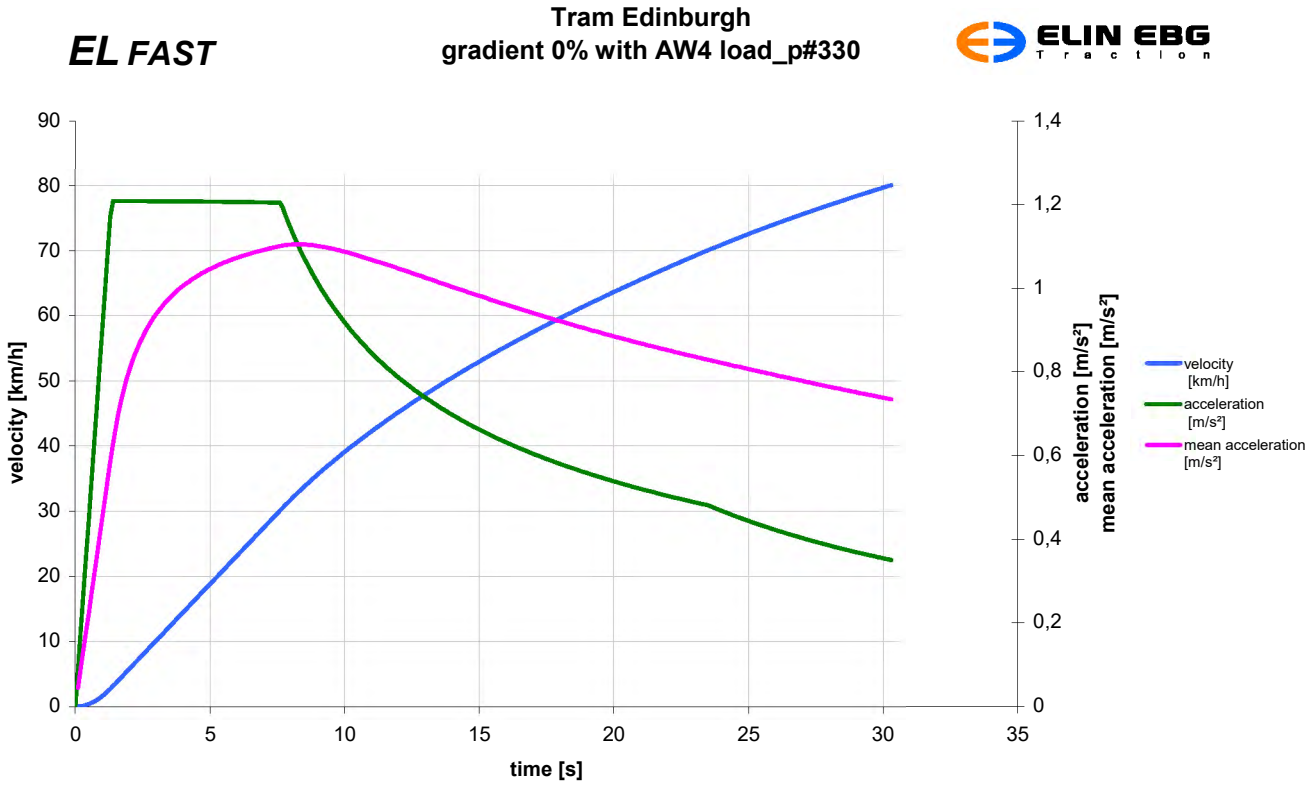

3.4 Accelerations with AW4 load and 8% gradient

v = f(t), a = f(t) velocity and acceleration as a function of time

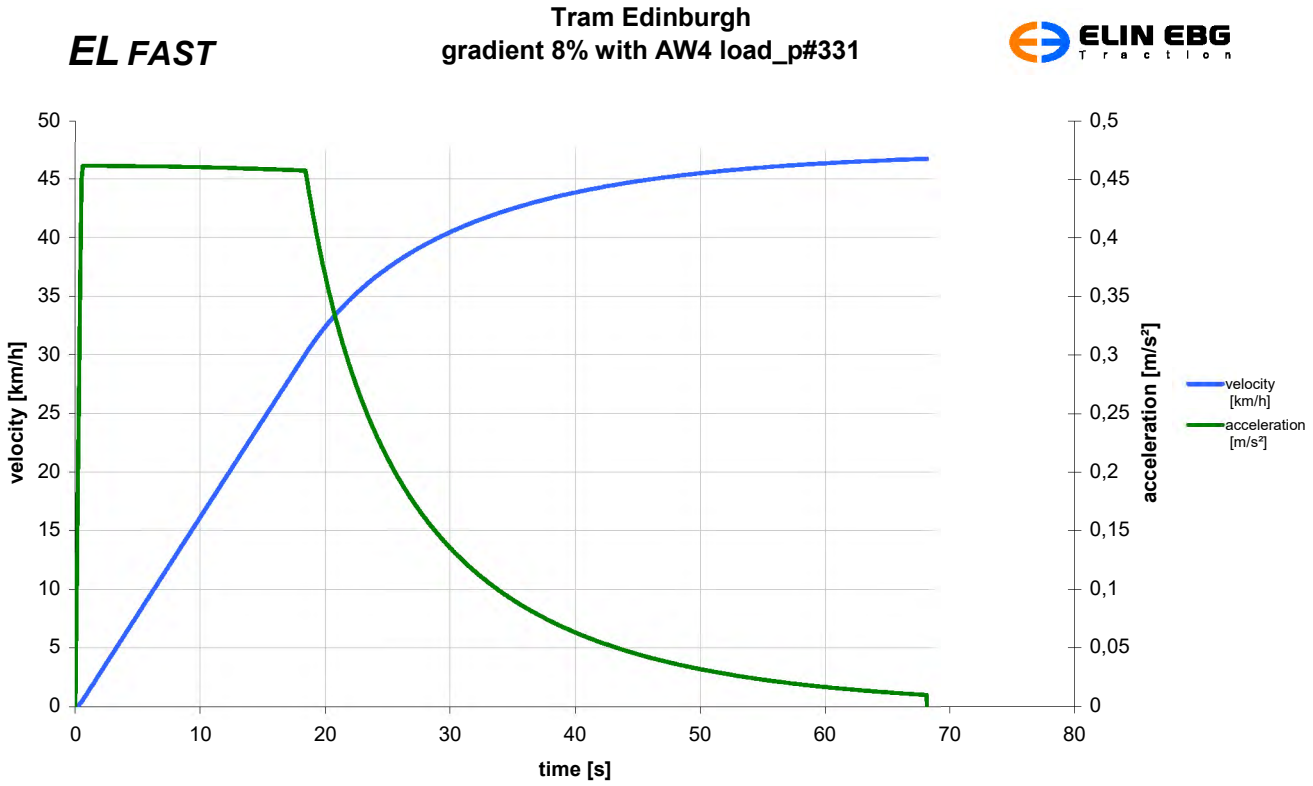

3.5 Decelerations with AW2 load and 0% gradient

v = f(t), a = f(t), ā = f(t) velocity, deceleration and mean deceleration as a function of time

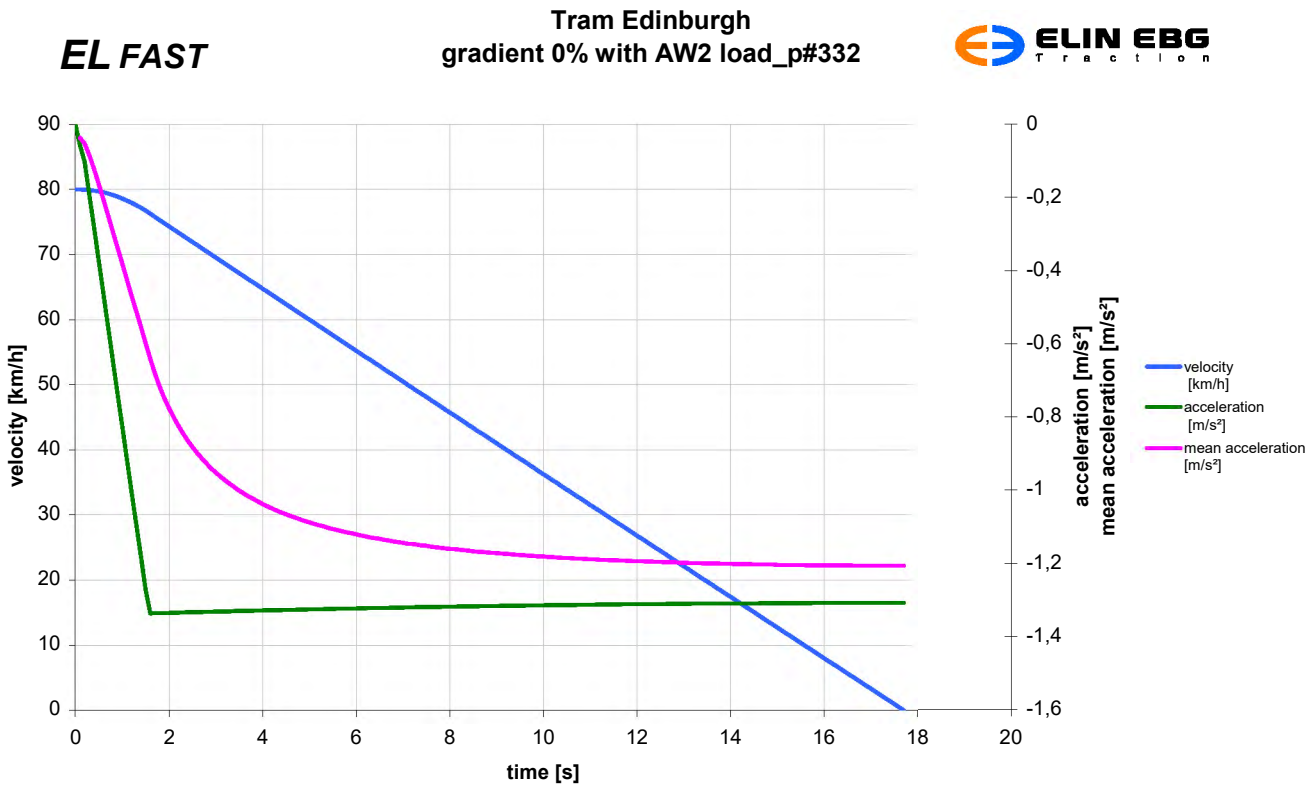

3.6 Decelerations with AW2 load and -8,0% gradient

v = f(t), a = f(t) velocity, and deceleration as a function of time

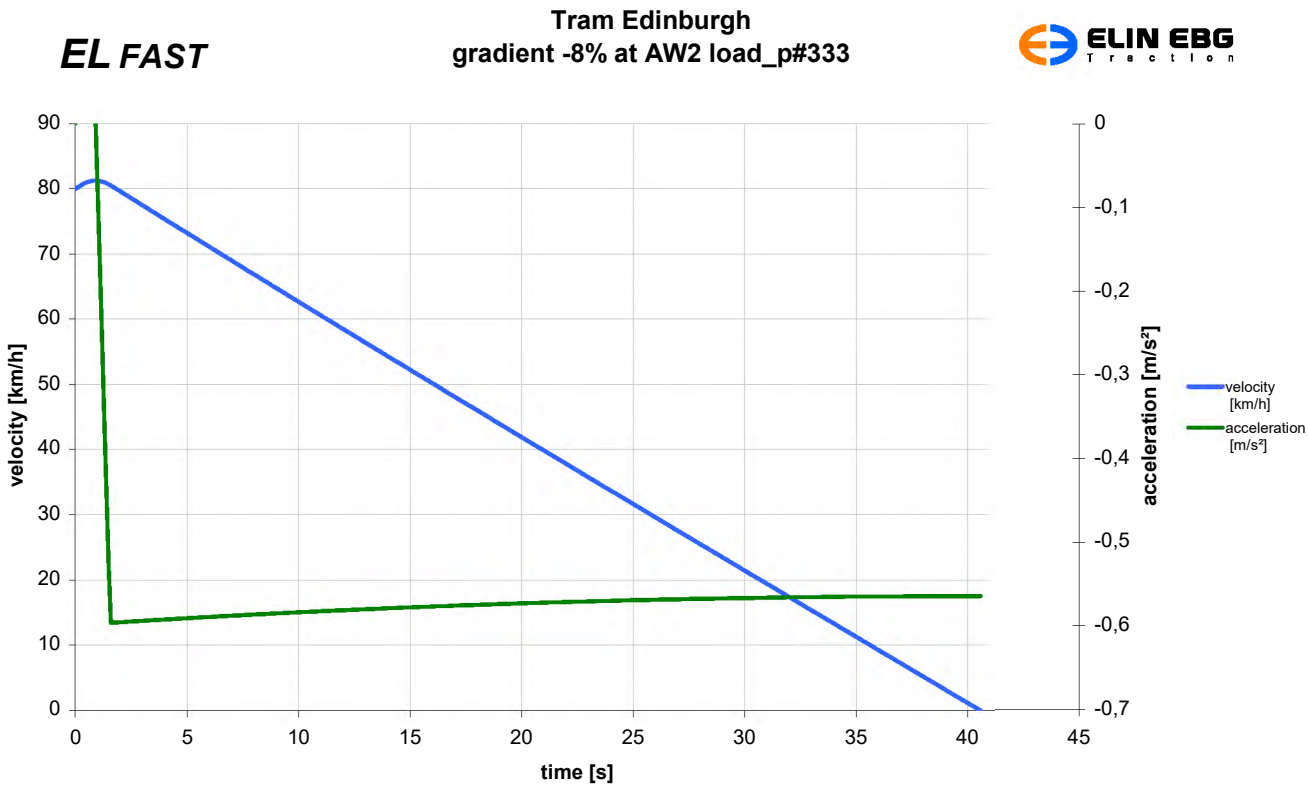

4 Dynamic simulations with 66% propulsion (degraded mode)

The vehicle consists of three motor bogies and one trailer bogie. The following simulations were made under the assumption that one of three available propulsion systems has a breakdown.
The tractive and braking forces will be adapted by activating a switch on the drivers desk (speed limitation 40 km/h).

4.1 Parameters for dynamic simulation

Catenary voltage for simulation:	750 VDC
Maximum velocity	40 km/h
Wheel diameter:	590 mm
Rotating mass	4,11 tons
Parameters for all simulations:	see section 1.1

The dynamic behaviour is investigated at 0% and 8% gradients and loads of 73,312 tons (AW2 load) and 79,657 tons (AW4 load).

4.2 Tractive force diagram at AW4 load and braking force diagram at AW2 load in degraded mode

F = f(v) tractive force as a function of velocity

EL FAST

Tram Edinburgh
degraded mode
tractive force with AW4 load_d#311

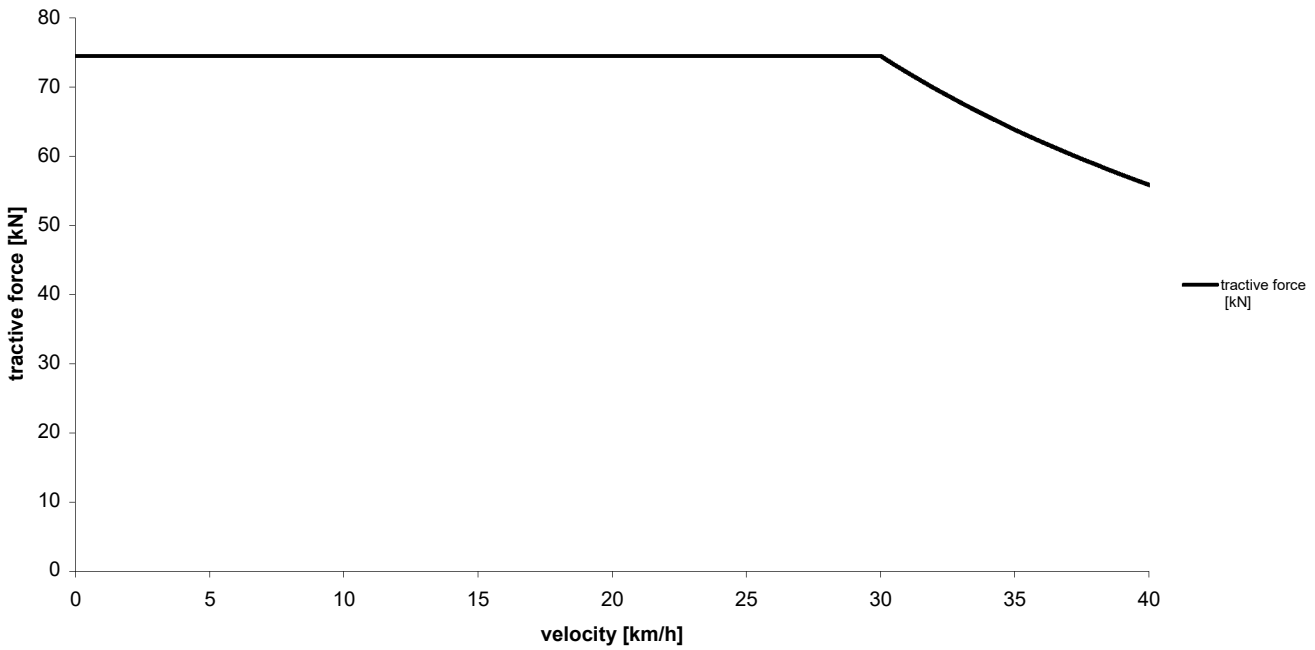

F = f(v) braking force as a function of velocity

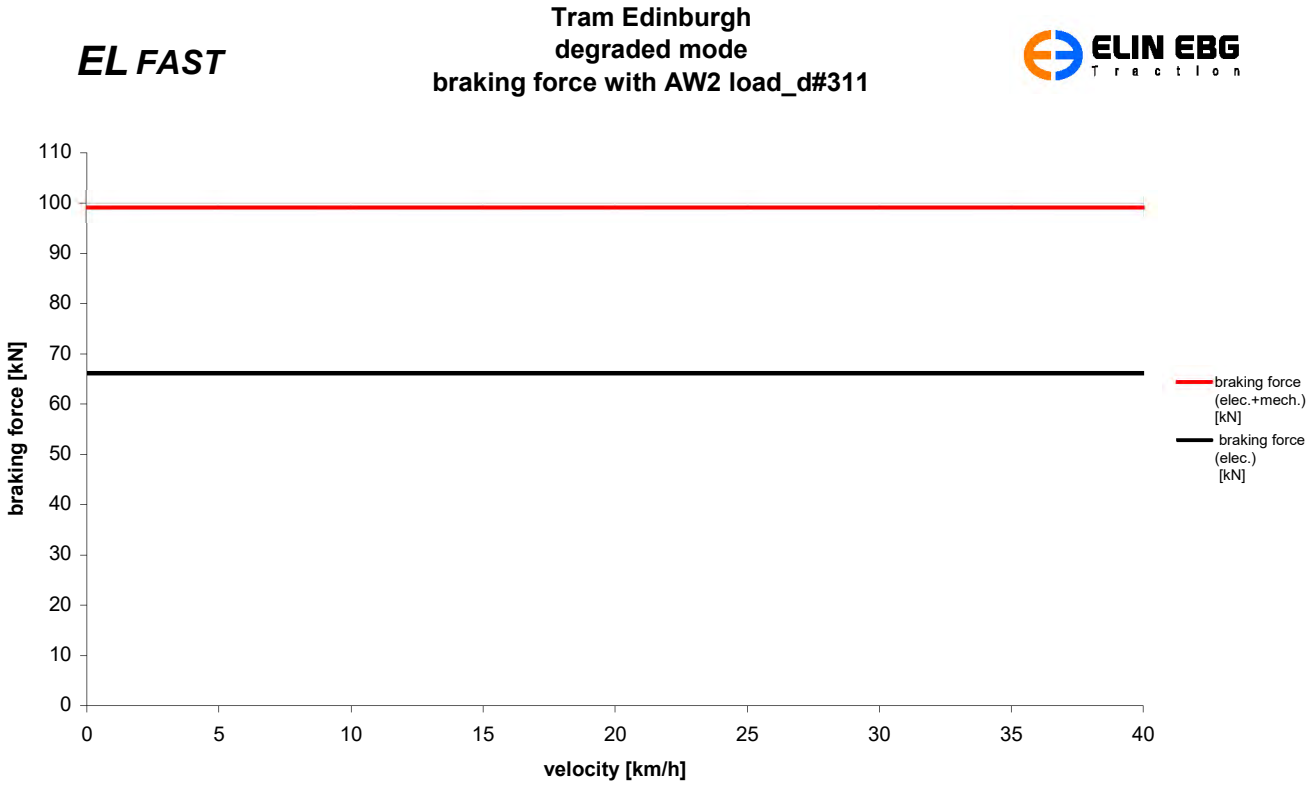

4.3 Accelerations with AW4 load and 0% gradient

v = f(t), a = f(t) velocity and acceleration as a function of time

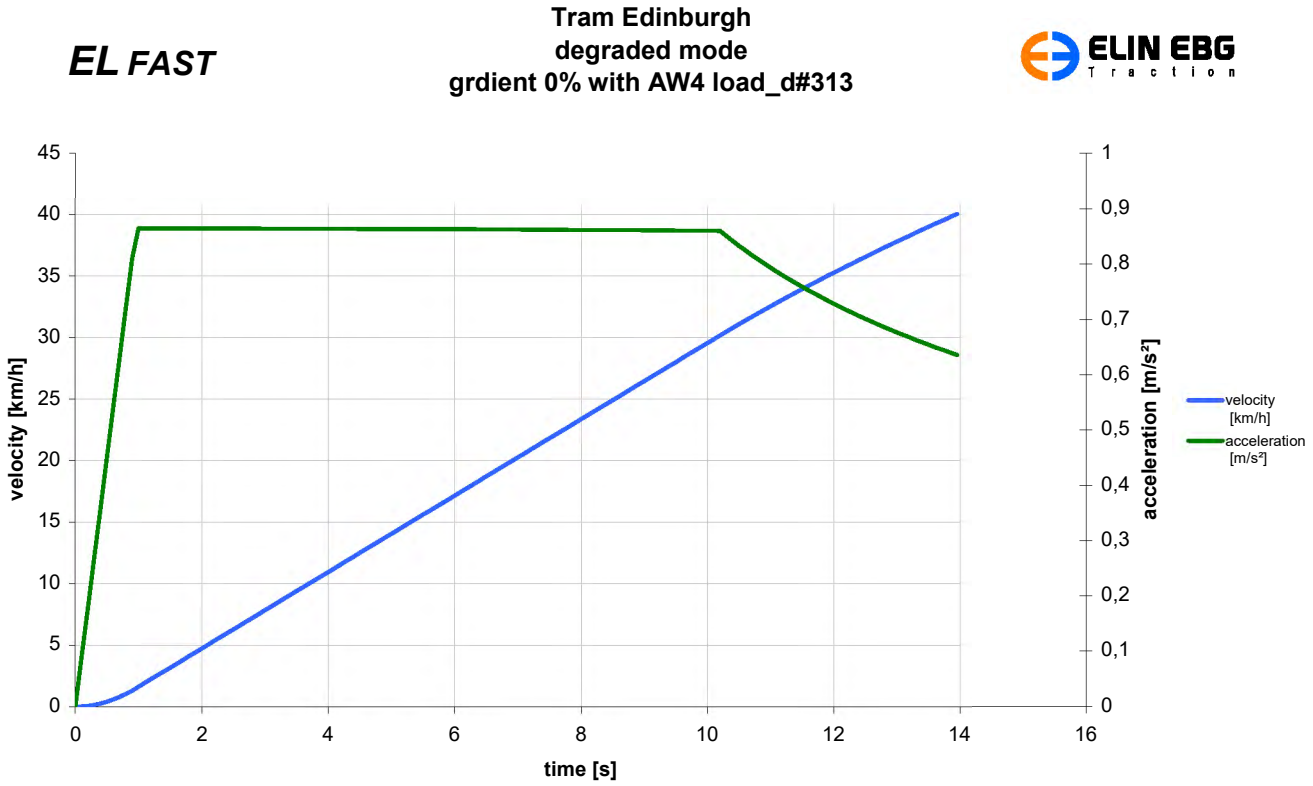

4.4 Accelerations with AW4 load and 8,0% gradient

v = f(t), a = f(t) velocity and acceleration as a function of time

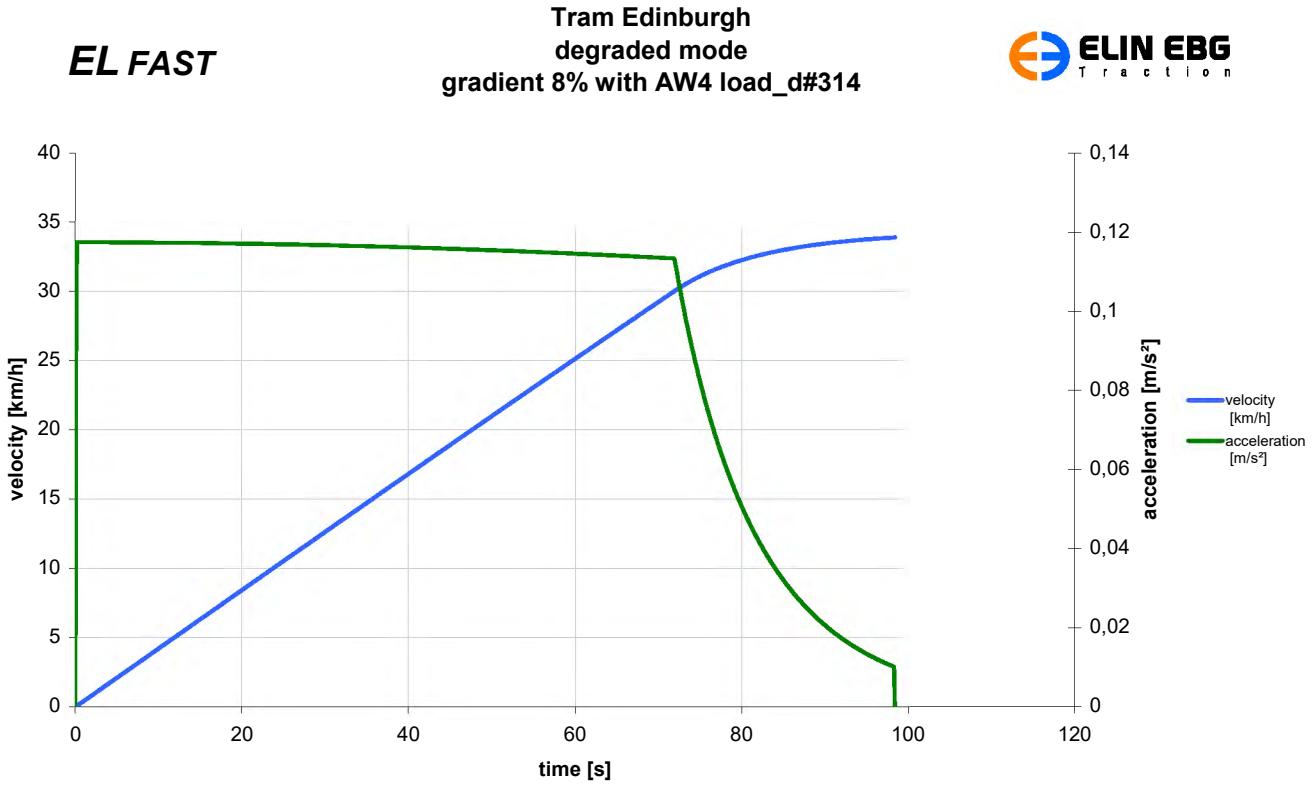

4.5 Decelerations with AW2 load and 0% gradient (only electrodynamic brake)

v = f(t), a = f(t) velocity and deceleration as a function of time

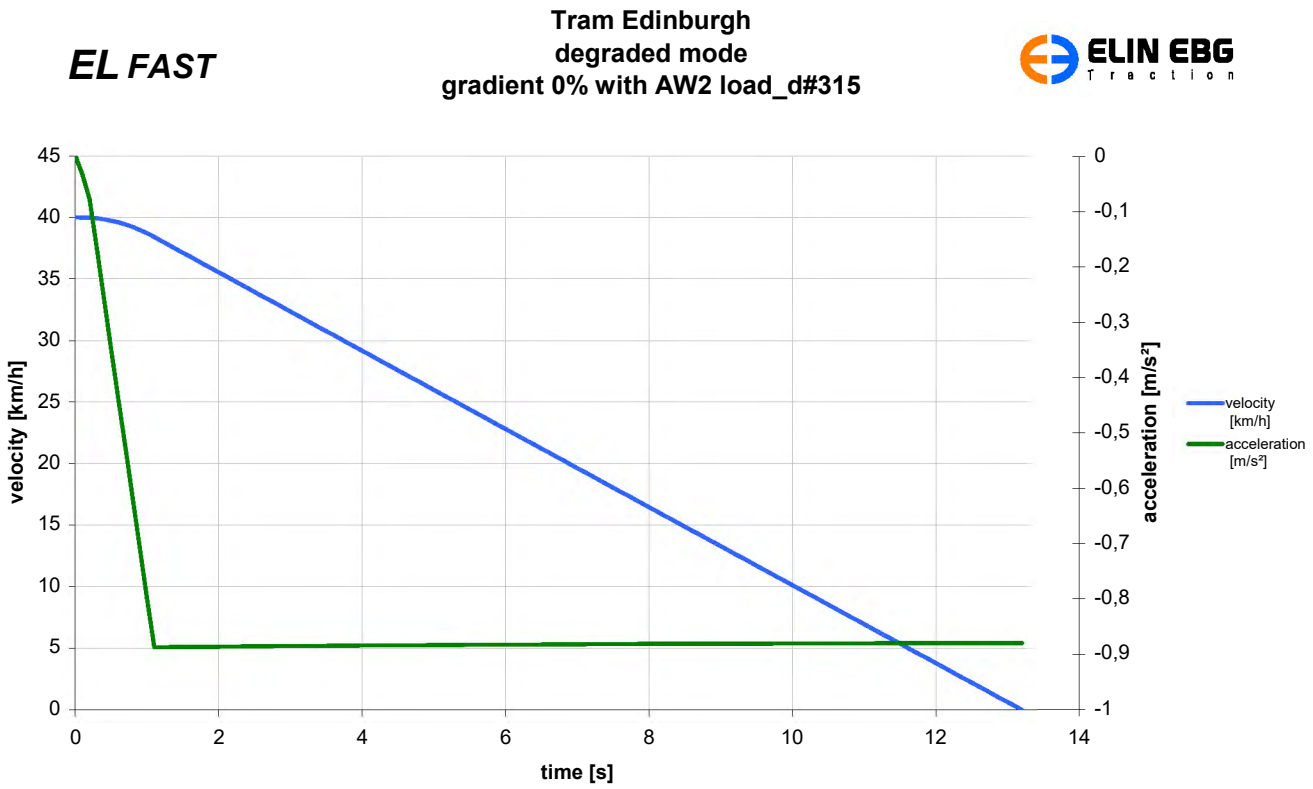

4.6 Decelerations with AW2 load and 0% gradient (electrodynamic and mechanical brake)

v = f(t), a = f(t) velocity and deceleration as a function of time

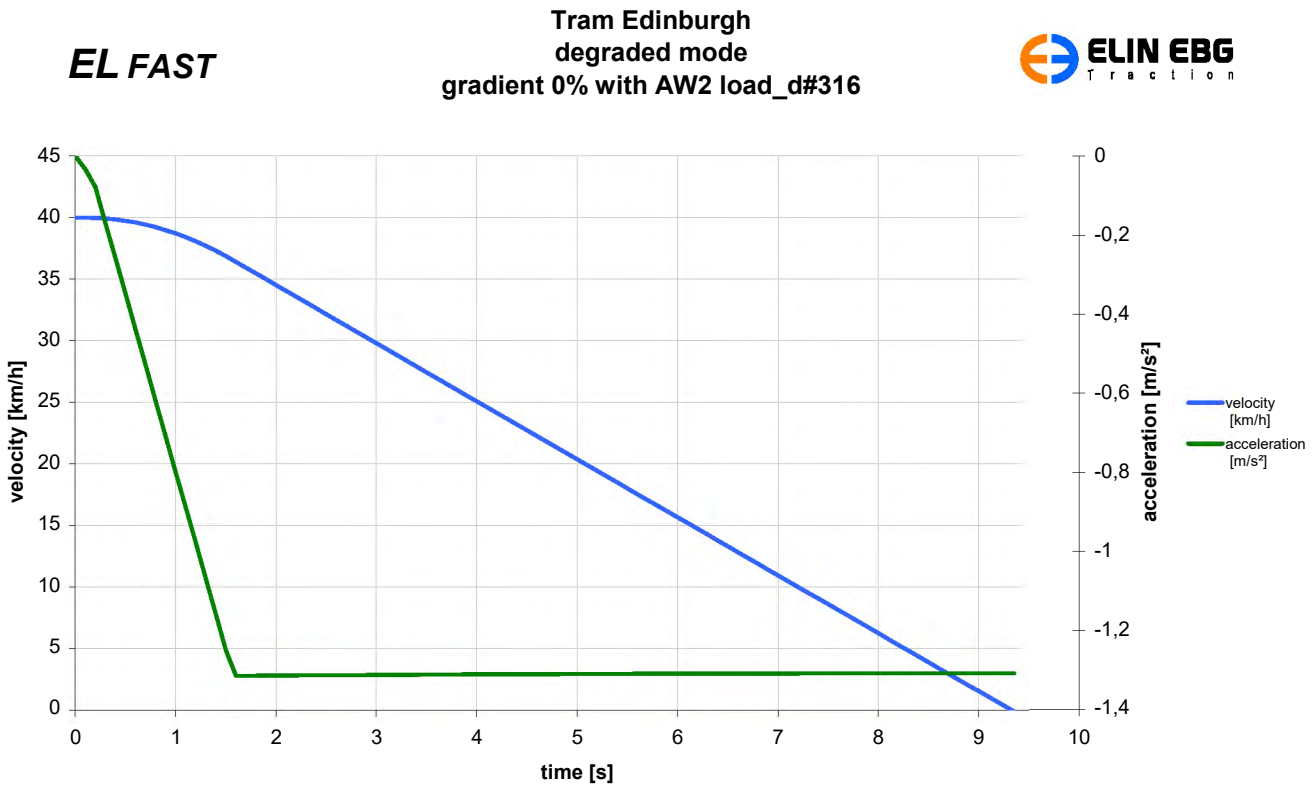

4.7 Decelerations with AW2 load and -8,0% gradient (only electrodynamic brake)

v = f(t), a = f(t) velocity and deceleration as a function of time

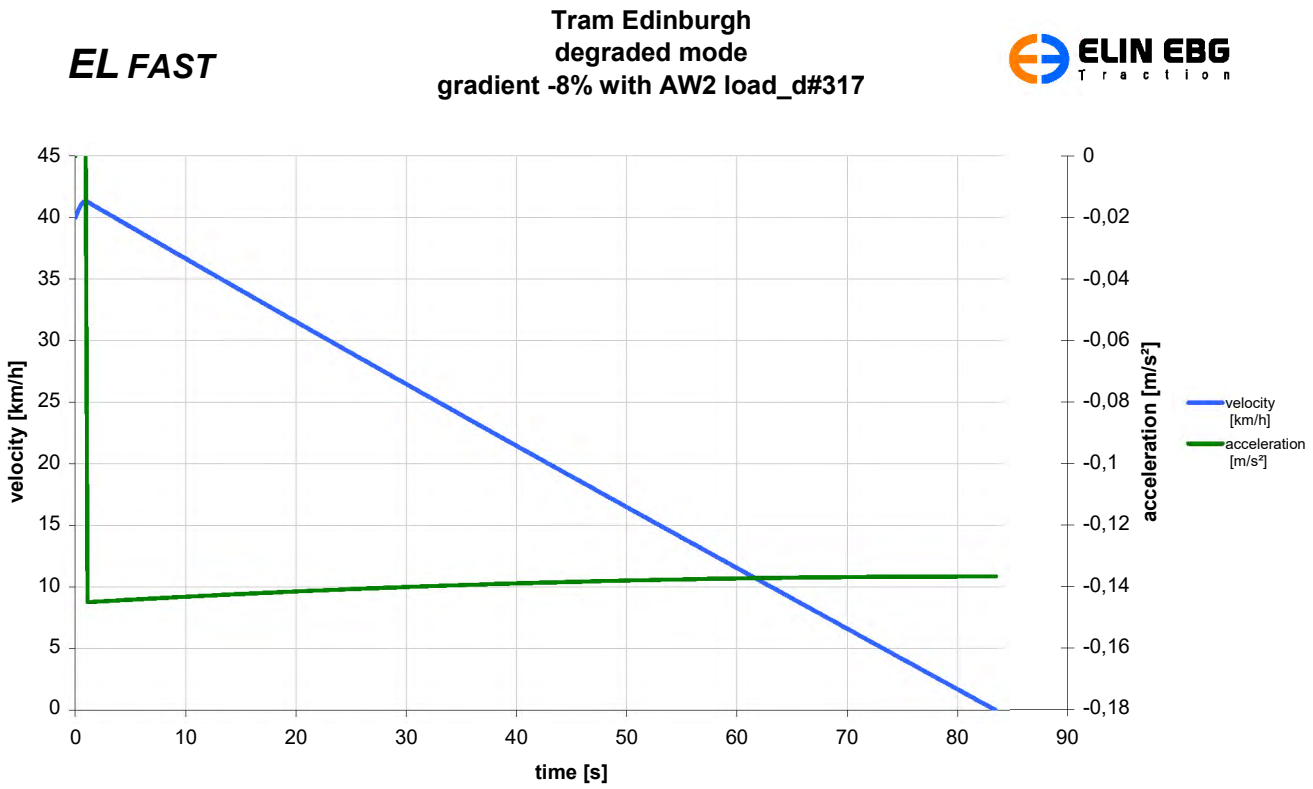

4.8 Decelerations with AW2 load and -8,0% gradient (electrodynamic and mechanical brake)

v = f(t), a = f(t) velocity and deceleration as a function of time

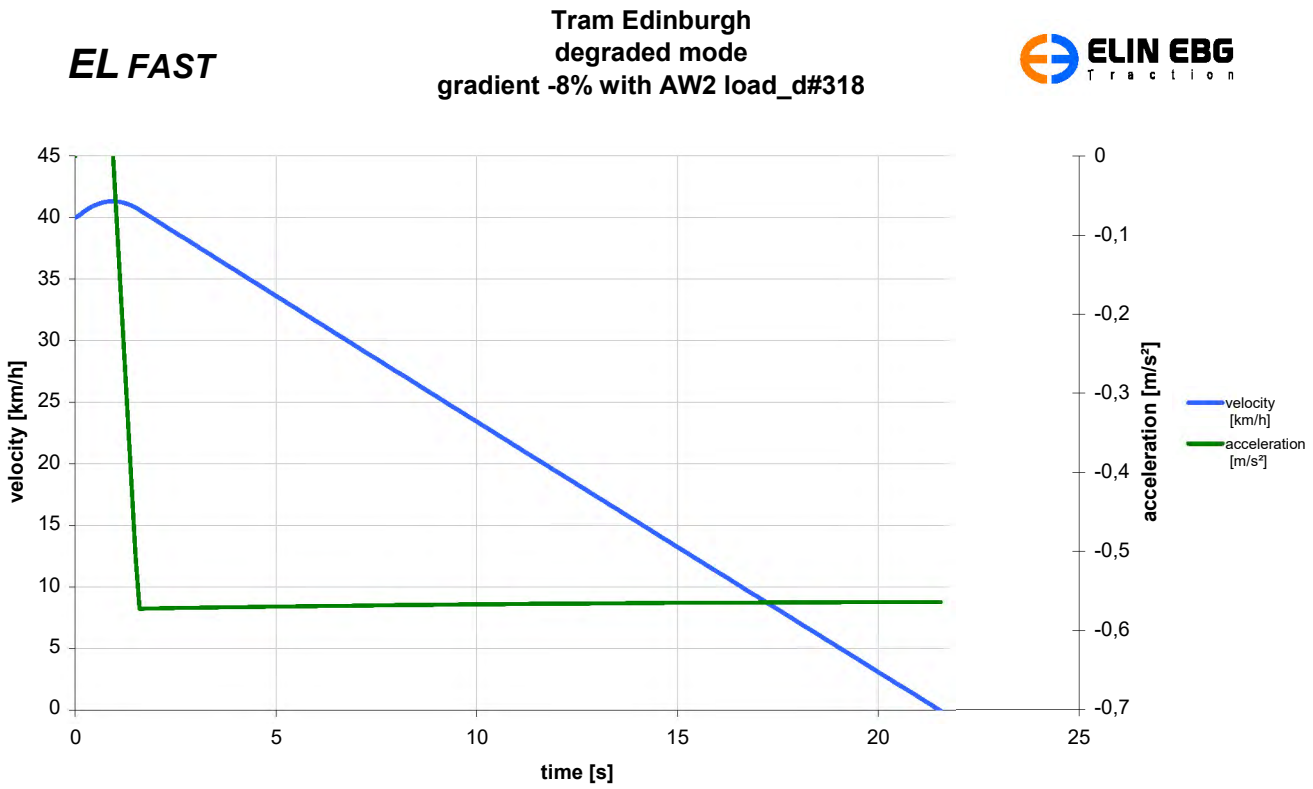

5 Dynamic simulations for towing

The following simulations were made under the assumption that one vehicle (AW0 load) with 100% available propulsion tows a vehicle (AW0 load) with 0% propulsion.
The tractive and braking forces will be adapted by activating a switch on the drivers desk (speed limitation 40 km/h).

5.1 Parameters for dynamic simulation

Catenary voltage for simulation:	750 VDC
Maximum velocity	40 km/h
Wheel diameter:	590 mm
Rotating mass per vehicle:	4,11 tons
Parameters for all simulations:	see section 1.1

5.2 Tractive force for towing with 2x AW0 load

F = f(v) tractive force as a function of velocity

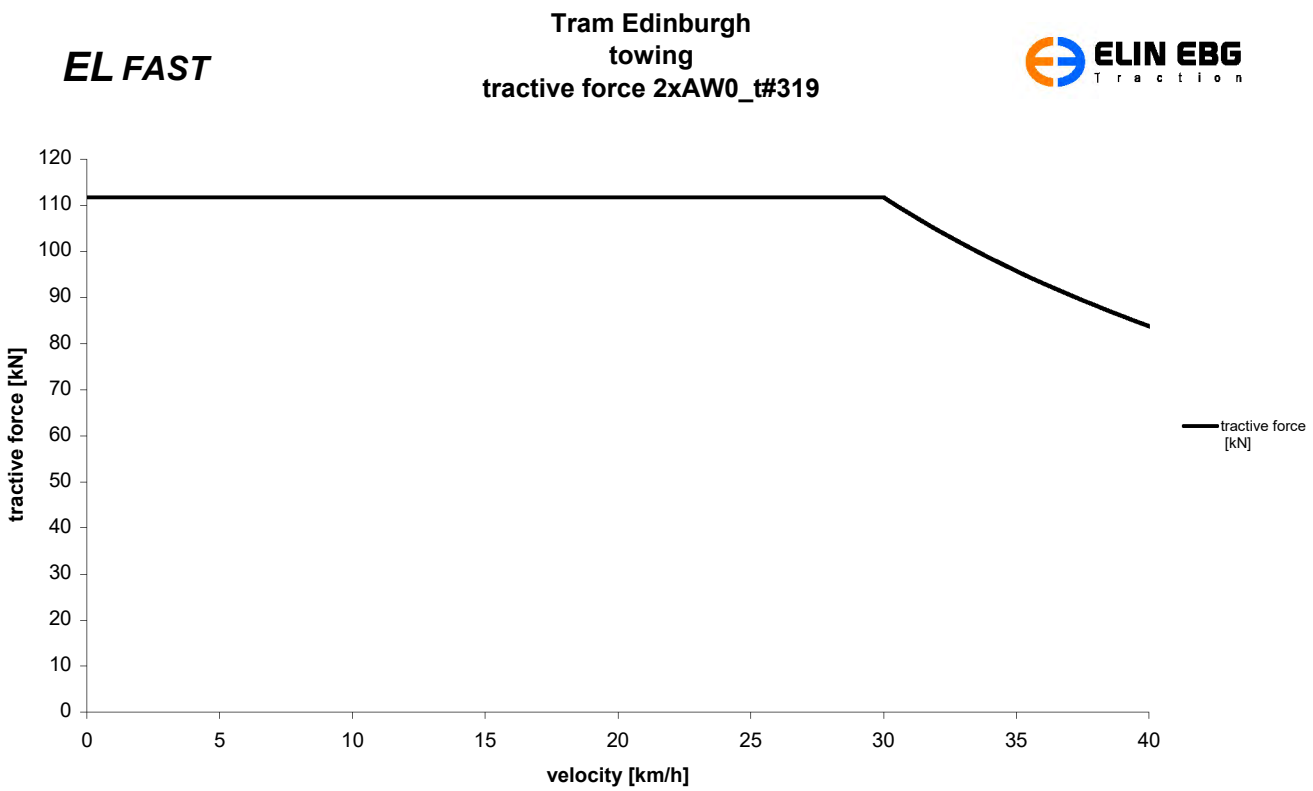

5.3 Accelerations for towing with 2x AW0 load and 0% gradient

v = f(t), a = f(t) velocity and acceleration as a function of time

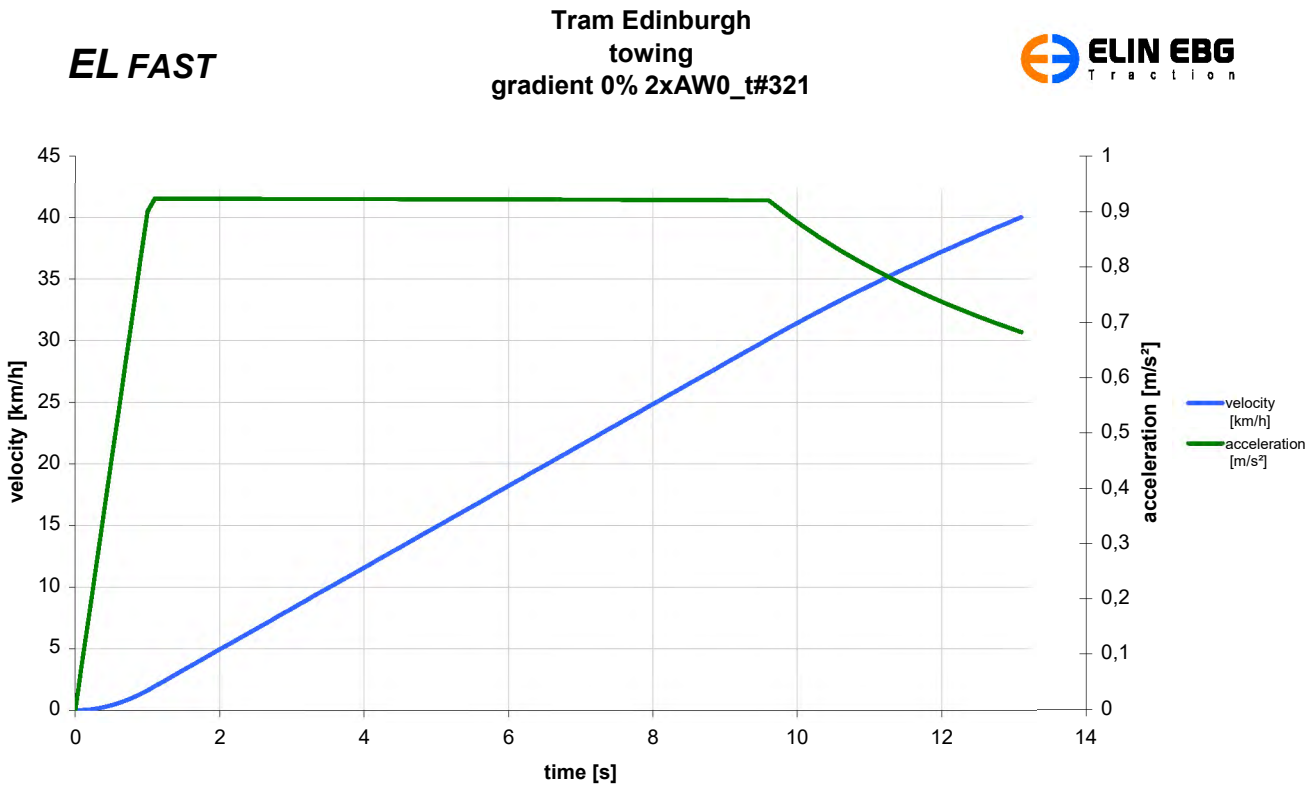

5.4 Accelerations for towing with 2x AW0 load and 8,0% gradient

v = f(t), a = f(t) velocity and acceleration as a function of time

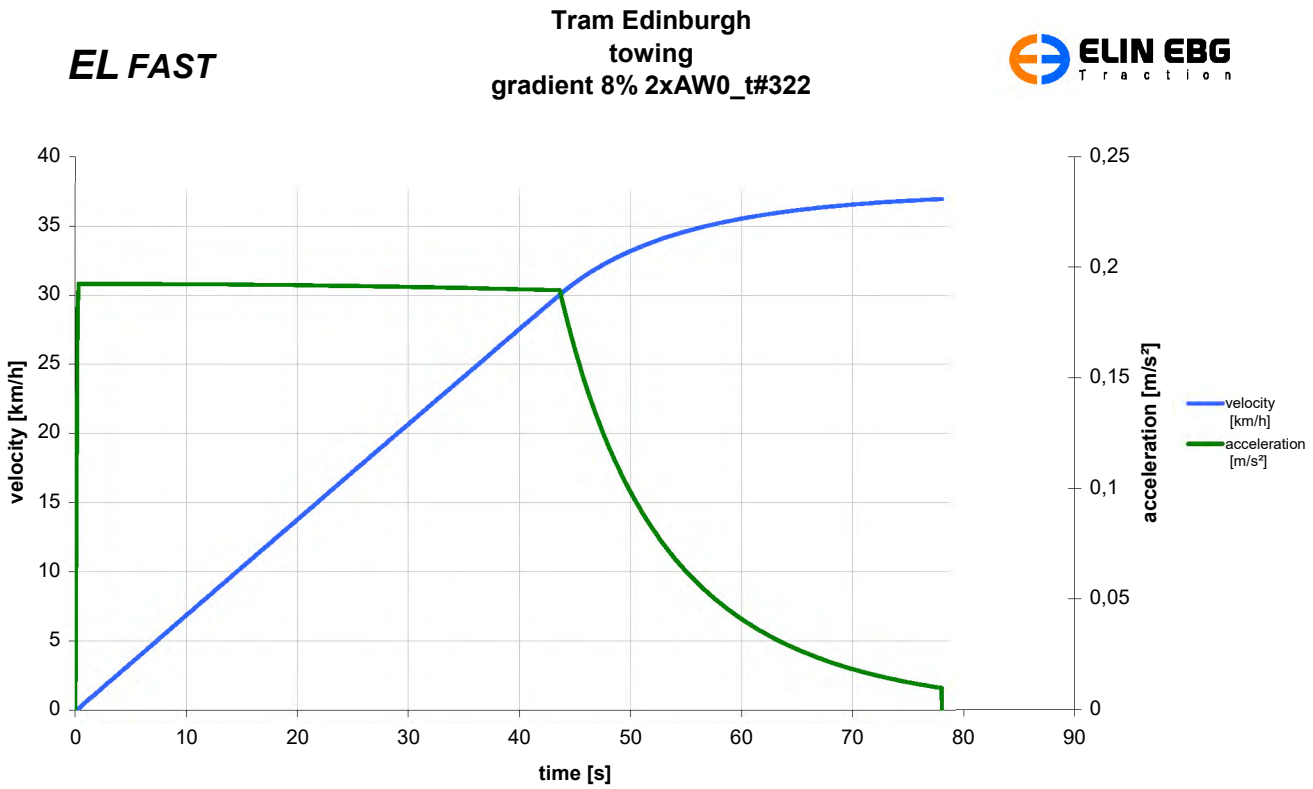

5.5 Electrodynamic braking force for towing with 2x AW0 load

F = f(v) electrodynamic braking force as a function of velocity

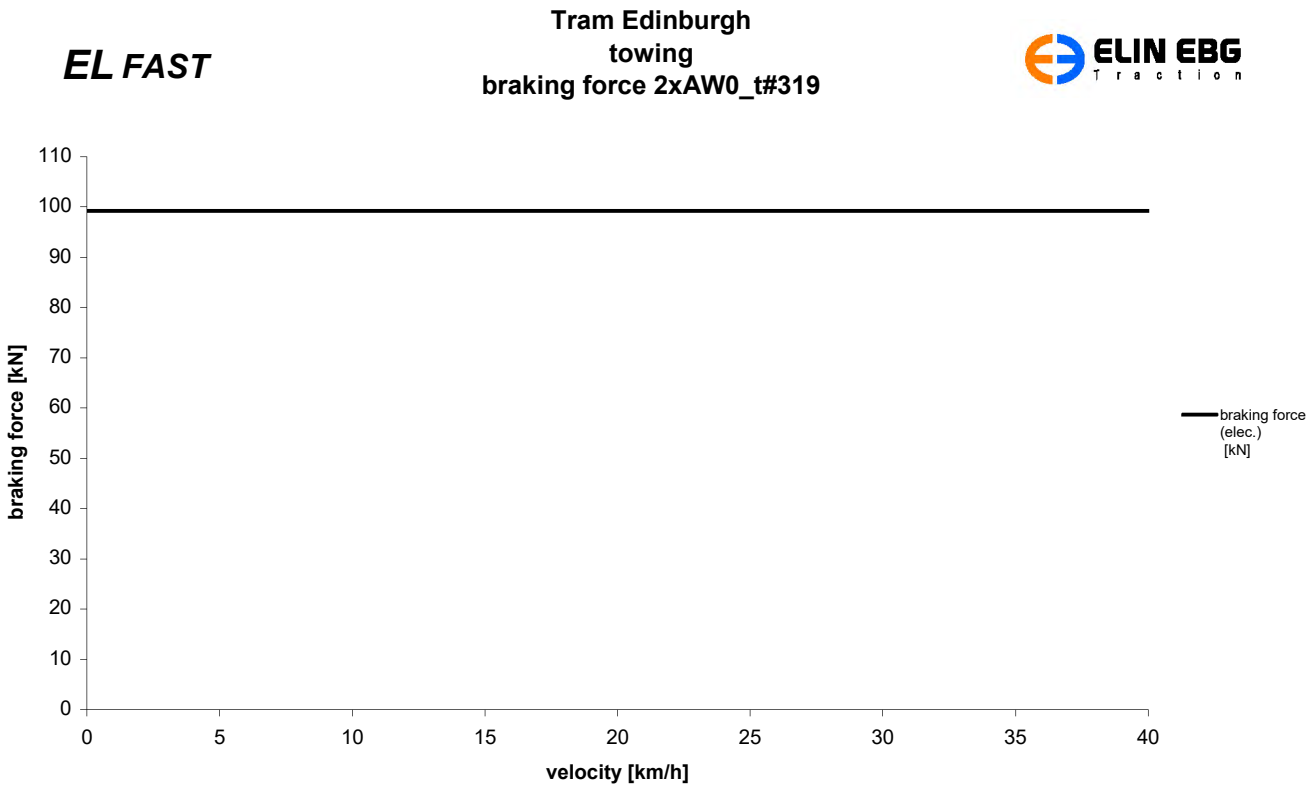

5.6 Decelerations for towing with 2x AW0 load and 0% gradient

v = f(t), a = f(t) velocity and deceleration as a function of time

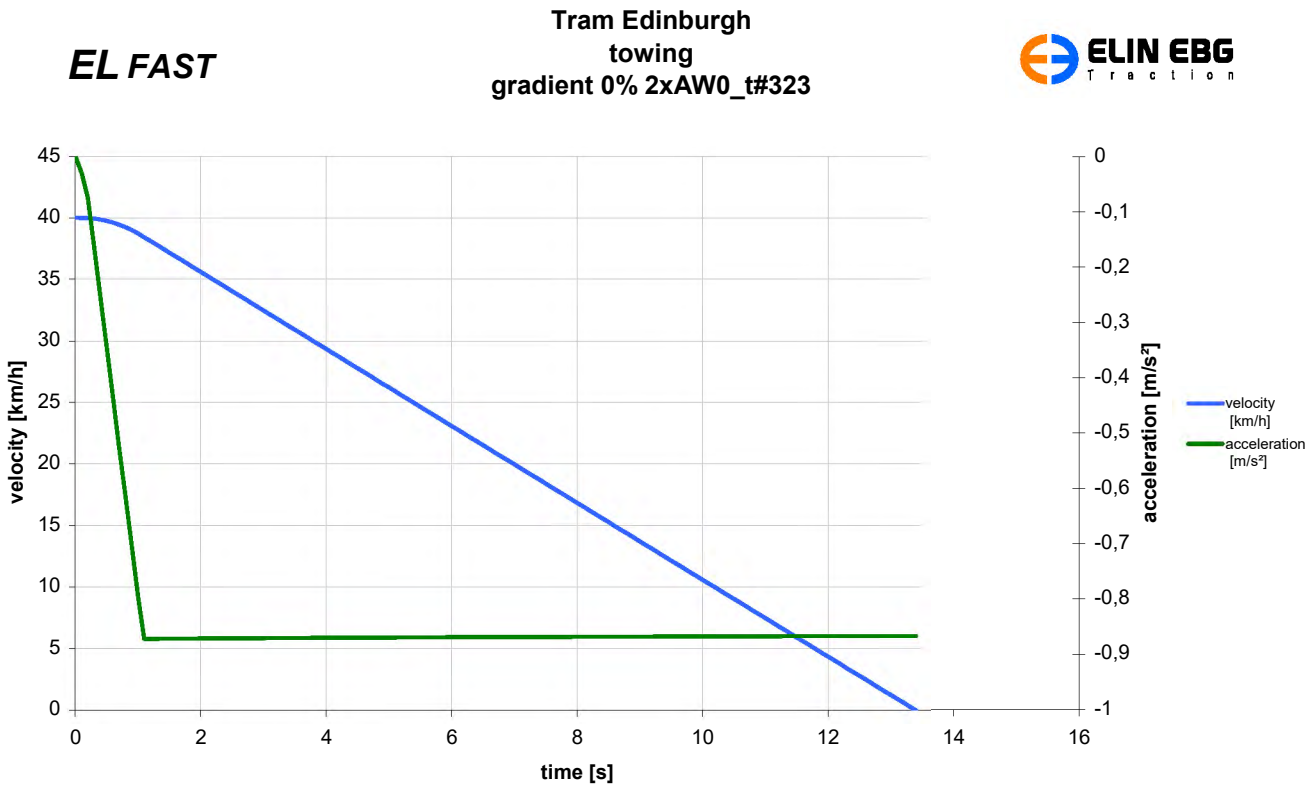

5.7 Decelerations for towing with 2x AW0 load and -8,0% gradient

v = f(t), a = f(t) velocity and deceleration as a function of time

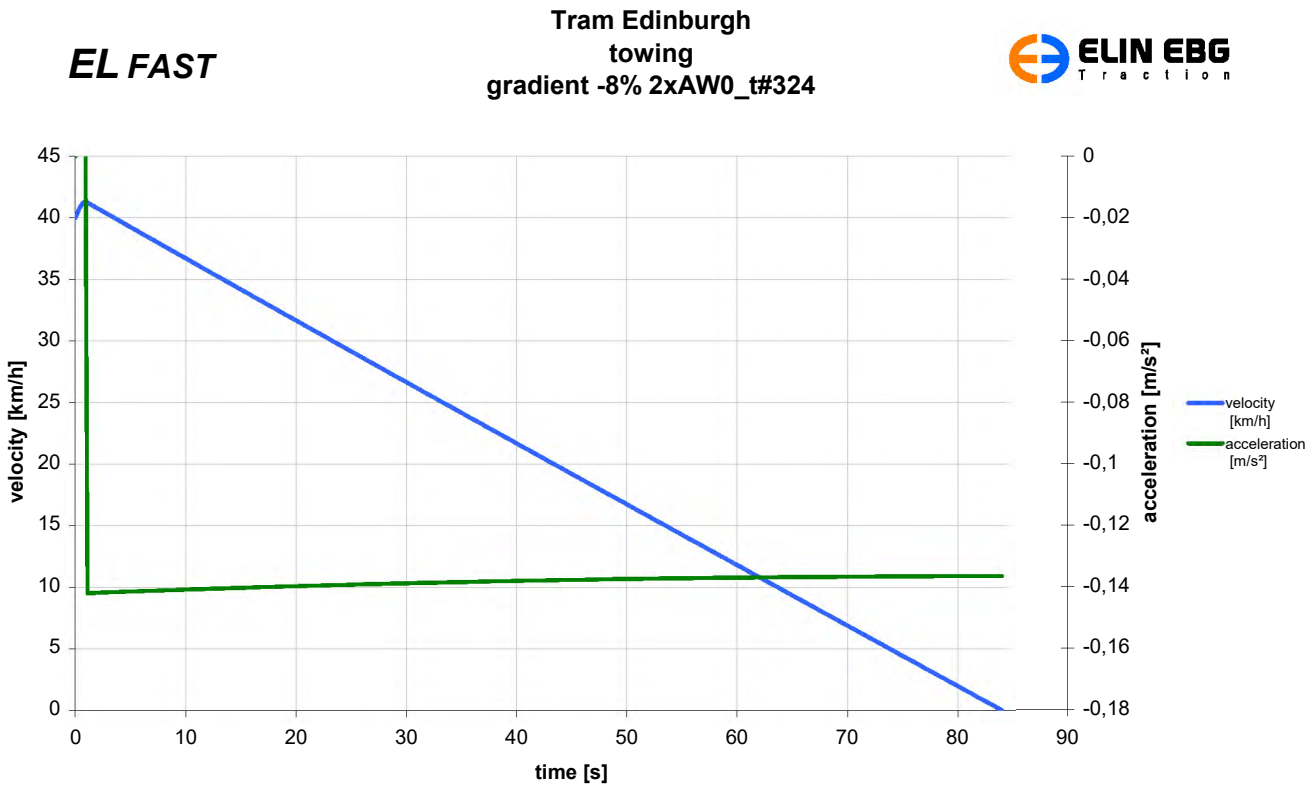

AUTOMATIC PASSENGER COUNTING SYSTEM FOR TRAMWAYS

ACOREL COUNTING EQUIPMENT SPECIFICATIONS FOR A TRAIN WITH OPTION GPS & GPRS

3, rue Paul LANGEVIN
F-07130 SAINT-PERAY

Tél.: 04 75 40 59 79 Fax : 04 75 40 57 71
Internet : www.acorel.com

AUTOMATIC PASSENGER COUNTING SYSTEM FOR TRAINS

ACOREL COUNTING EQUIPMENT SPECIFICATIONS FOR TRAIN WITH OPTION GPS & GPRS

Ref. : SP0140	**Rev. : 2**

	NAME	FUNCTION	DATE	SIGNATURE (*)
Created by	***E. BLANZAT*** ***JL. GAYTE***	*R & D*		
Approuved by	***JL. GAYTE***	*Project Manager*		
Authorised by	***R. GRAND***	*Sales & Marketing Director*		

* In the absence of a handwritten signature, this document is valid only in protected PDF format.

Copyright © ACOREL **Confidential**

SUIVI DES MODIFICATIONS			
Revision	Pages	Date	Description
0	13	09/11/2005	Creation
2	All	24/02/2006	Adaptation

Copyright © ACOREL

CONTENTS

1. GENERAL 1
1.1. PURPOSE OF DOCUMENT 1
1.2. ABBREVIATIONS 1
2. LIST OF COUNTING EQUIPMENT 2
2.1. LIST OF ONBOARD EQUIPMENT 3
2.1.1. FOR THE TRAIN 3
2.1.2. FOR EACH DOOR 3
2.2. LIST OF STATIC EQUIPMENT 3
2.2.1. FOR THE MATERIEL 3
2.2.2. FOR THE SOFTWARE 3
3. EQUIPMENT SPECIFICATIONS 4
3.1. DATA MANAGEMENT BOARD (UCD) 4
3.1.1. FUNCTIONS 4
3.1.2. IMPLEMENTATION OF THE UCD AND ITS PERIPHERAL DEVICES (GPS & GPRS) 4
3.1.3. MECANICAL AND FIXTURE SPACE 4
3.2. ANTENNAE GPS/GPRS *(OPTION)* 6
3.2.1. TECHNICAL CHARACTERISTICS 6
3.2.2. DIMENSIONS 6
3.3. GPS/GPRS MODULE *(OPTION)* 7
3.3.1. TECHNICAL CHARACTERISTICS 7
3.3.2. DIMENSIONS 9
3.4. TRAIN COUNTING MODULE (MCT) 10
3.4.1. FUNCTIONS 10
3.4.2. MCT DIAGRAM – SMALL DOOR – 1 SENSOR 10
3.4.3. MCT DIAGRAM – LARGE DOOR – 3 SENSORS 11
3.5. DOOR INTERFACE MODULE (MIP) 12
3.5.1. DEFINITION 12
3.5.2. DIMENSIONS 12
3.6. PRE-ASSEMBLED KIT « MCT + MIP + FIXTURE KIT + MICROSWITCH » 13
3.7. PROTECTION GRATES 14
3.7.1. DEFINITIONS 14
3.7.2. DIMENSIONS 14
3.8. CABLING 14
3.8.1. MODULE CABLES « UCD/GPRS/GPS » 14
3.8.2. MODULE CABLES « MCT/MIP » 15
3.9. NORMS 16
3.9.1. GENERAL CRITERIA 16
3.9.2. SPECIFIC CRITERIA 16
3.9.3. CABLING SYNOPTIC 17

Copyright © ACOREL Confidential

1. General

1.1. PURPOSE OF DOCUMENT

The purpose of this document is to instruct the client on how to install the cabling and mechanics of the counting equipment and the GPS/GPRS antennae for a train.

This document primarily explains the technical specifications and the dimensions of the GPS and GPRS equipment. This equipment is used to locate the train (with the GPS), data which is incorporate with that of the passenger counting system, and then to transmit the data (via the GPRS) to a PC-CPT.

1.2. ABBREVIATIONS

. **UCD** : Data Management Board
. **MCT** : Train Counting Module, integrates the counting bar and its fixtures
. **PM** : Maintenance Handheld, Maintenance tool with infrared tag
. **SIE** : Passenger Information System
. **SAE** : Automatic Vehicle Location System
. **MESD** : Entry / Exit Module Sent to the SIE
. **PC-CPT** : Central Counting Data Management PC
. **UTV** : Maintenance software for the maintenance handheld
. **GPS** : Global Positioning System
. **GPRS** : General Packed Radio Service
. **MIP** : Door Interface Module
. **MGPRS** : GPRS Module
. **MGPS** : GPS Module

Copyright © ACOREL

2. List of counting equipment

The Acorel Onboard Counting System is a standard product used throughout numerous public transport networks. The equipment that we propose is modular and consists of a kit including the Counting Bar, the Data Management Board, and the cables to connect to a IBIS bus. This kit ensures the counting of passengers boarding and alighting the vehicle for a maximum of 32 doors. Using the most advanced technologies in electronics, data processing and signal treatment, the Acorel Counting Bar was developed specifically in order to continuously count, with directional differentiation, the passengers entering and leaving through a door.

Each door of the vehicle is equipped with a counting bar (MCT) composed of :

a) from 1 to 5 mixed active/passive infrared sensors, depending on the width of the door and the presence (or not) of a separation pole between the doors all integrated in an anodised aluminium cover painted to easily match the door panel and surroundings

c) an electronic management board

d) 1 or 2 detectors that communicate the opening and closing of the doors because we are only counting when the doors are opened

e) a switch that enables the definition of the counting bar's IBIS address for the data transmission.

The counting bar is installed in such a way that the counting zone is as near as possible to the door without being obstructed by the doors' opening and closing.

The counting technology, developed with 10 years of experience, is a combination of active and passive infrared sensors which are able to differentiate the people entering and leaving a place. The passive sensors are sensitive to the infrared rays given off by individuals and thus detect the direction of movement. The active sensors, through the emission/reception of an invisible infrared beam, differentiate between the person and the background.

The counting module (MIP) receives from the door detector two signals indicating the door's status:

a) Door closed (enabling the system to detect when the door begins to open)

b) Door completely open (enabling the system to detect when the door begins to close)

The Data Management Board (UCD):

a) memorises the counting bar's counting data from each door

b) communicates this data to the information system

c) enables counting system maintenance via a portable PC

d) transmits the electricity to the counting bars to which it is connected

The UCD can be equipped with additional interfaces according to the exploitation needs of the client (GPS, E/R HF, GPRS modem)

The UCD can be installed anywhere in the vehicle, but is normally found in a technical cupboard near the front of the vehicle.

The equipment produced depends on:

a) the number of doors on the vehicle (one counting rod per door)

b) the width of the doors (this dictates the required number of sensors needed in the bar with a sensor placed every 45 cm)

c) the presence of a separation pole between the doors

d) the presence of door detectors (Acorel can supply the detectors)

e) the existence of cables compliant with Acorel's needs

f) the existence of a management board that can

- collect the maintenance and counting data from each door
- memorise and transmit the data to the main PC
- transmit the vehicle coordinates, the route information, and the stop coordinates

Copyright © ACOREL

For each project, the vehicle integration of the Acorel equipment will be explained in detail in an installation document defining all the sub-components, their placements within or around the access way, and their interconnecting cables.

2.1. List of onboard equipment

ACOREL delivers all the necessary fixtures, connectors, and screws for equipment installation and cabling.

2.1.1. For the TRAIN

- 1 UCD connected to the IBIS bus
- 1 GPS/GPRS ANTENNAE
- 1 GPRS MODULE with Subscription
- 1 GPS MODULE
- 1 Cable Kit to interconnect all the counting equipments.

2.1.2. For each DOOR

- 1 MCT connected to the MIP box
- 1 MCT Fixture Kit

  Note: The MCT brackets are delivered pre-installed on the MCT and to be mounted onsite.
- 1 door detector kit that includes a microswitch for the end of the run and a cam that is attached to the mobile part of the door mechanism.

  Note: The microswitch and the cam are specified by the door manufacturer. The microswitch is attached to the MCT brackets: it is delivered pre-attached to the MCT, but its position must be adjusted during installation.
- 1 MIP connected to the IBIS bus

  Note: A simple MIP will be used for each door.
- 1 Cable kit to interconnect the counting equipment.

2.2. List of static equipment

2.2.1. For the MATERIEL

- 1 PC AT ACOREL FOR THE DATA COLLECTION VIA GPRS

2.2.2. For the SOFTWARE

- 1 GPRS OPERATING LICENCE *(option)*
- 1 DATA MANAGEMENT SOFTWARE *(option)*

Copyright © ACOREL

Confidential

3. Equipment specifications

3.1. Data Management Board (UCD)

3.1.1. Functions

The ***Data Management Board*** (**UCD**) collects the counting information from each door's equipment (MCT). At each stop the UCD integrates the location of the train (GPS) and backs up the information. The data is then transmitted to the central server via a GPRS modem.

The UCD contains:

- a IBIS interface for the MCT communication
- one RS232 channel for the maintenance PC interface
- one RS232 channel for the GPRS modem interface

3.1.2. Implementation of the UCD and its peripheral devices (GPS & GPRS)

The primary factors to take into consideration for the implementation of the UCD and its peripheral devices are:

- The UCD must be easily accessible in order to allow for easy cable connection to the maintenance PC, and for maintenance operations including diagnostic interventions and/or system updates.
- The distance between the UCD and the GPS and GPRS modules must be less than 5m.
- The distance between the GPS/GPRS antennae and the GPS and GPRS modules must be less than 5m.

3.1.3. Mecanical and fixture space

N.B.: This diagram is valid only for use in the evaluation of the mechanical and fixture space required for the UCD. It cannot be used for connections or any other matter.

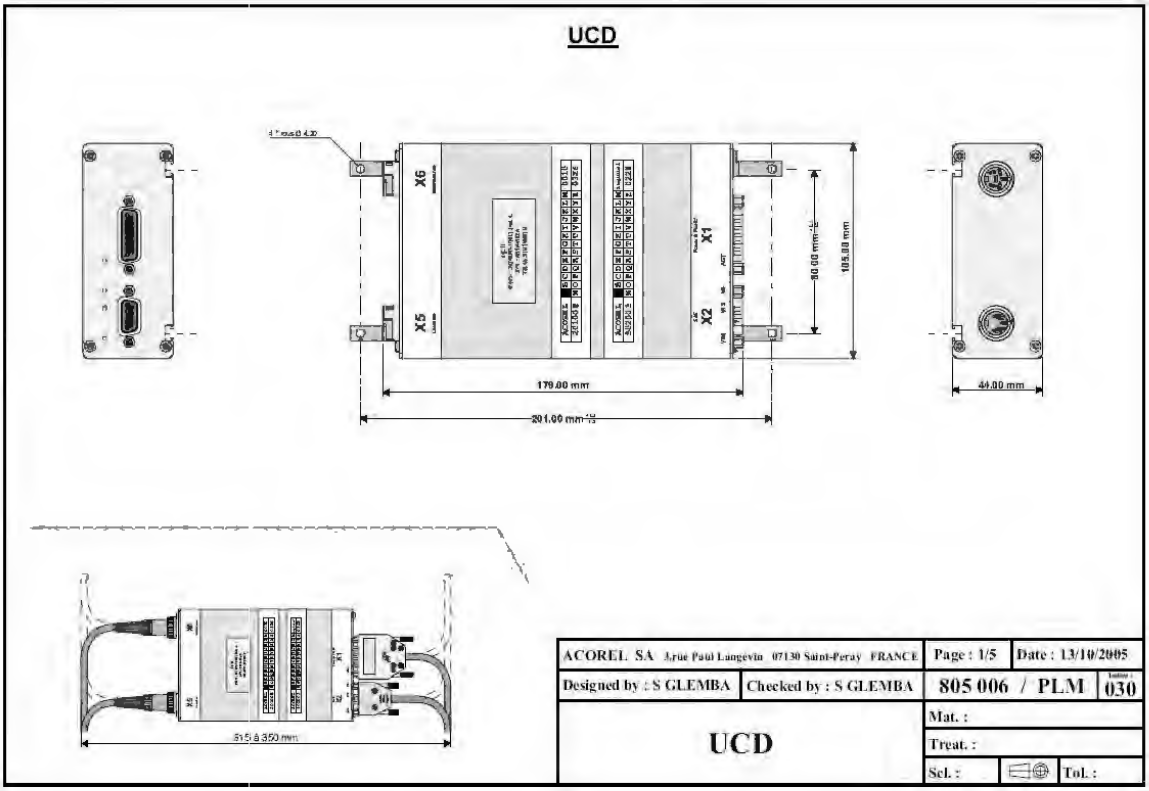

This diagram shows the fixing plate for the UCD.

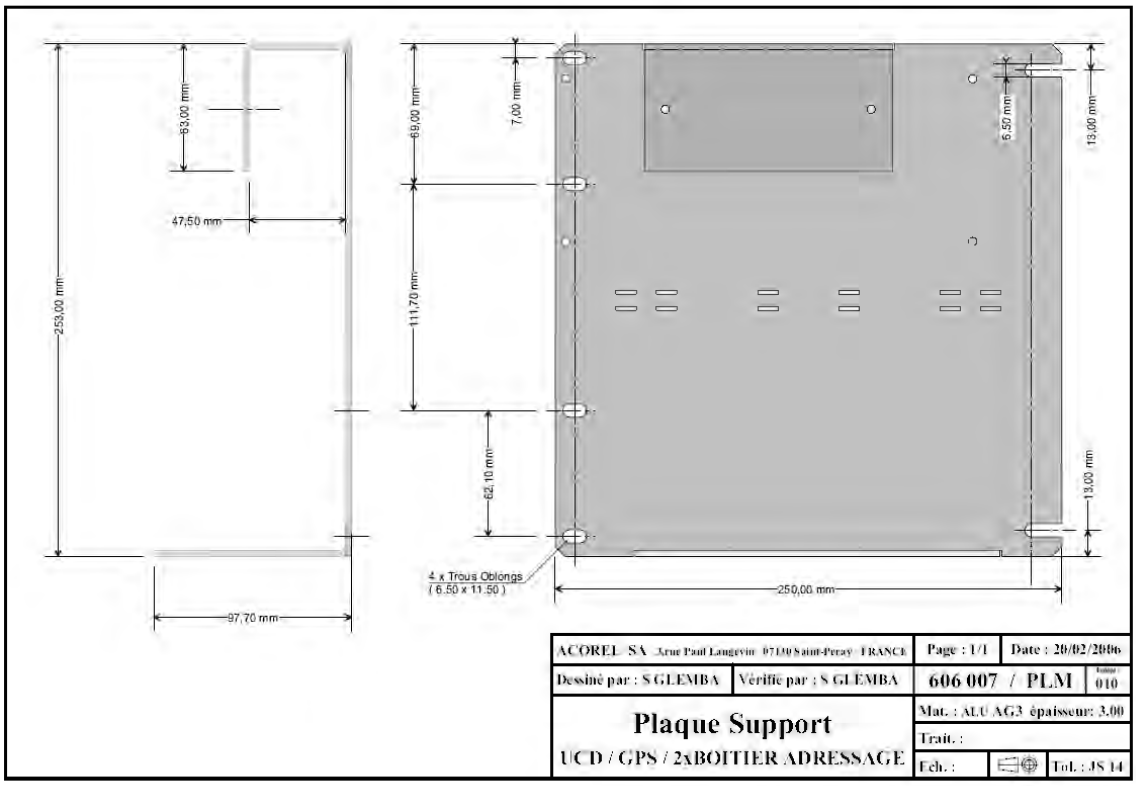

3.2. ANTENNAE GPS/GPRS *(option)*

GPS & GSM-DCS antennae installed on the exterior of the train

SMB-F and SMA-M connectors allow for a direct connection of the GPRS Module (MGPRS) and the GPS Module (MGPS). Directly powered by the MGPRS, the GPS' internal amplification offers a maximum gain of +27dB. The distance between the GPS/GPRS antennae and the GPS and GPRS modules must be less than 5m.

3.2.1. Technical characteristics

	GPS Characteristics	GSM / DCS Characteristics
Frequency	1,57542 GHz ± 1,0023 MHz	GSM: 880/960 DCS: 1710/1860 MHz
Impedance	50Ω	50Ω
Gain	Typical max 27 dB	0 dB
Noise	< 1,5 dB	
V.S.W.R	2,0 max	1.5:1
Power Supply	DC: 3,3V ± 0,6V	
Consumption	15 mA @ 3,3VDC	
Cable type	RG174	RG174
Cable length	5000 ± 50 mm	5000 ± 50 mm
Connector	Female SMB	Male SMA
T°C use	-30°C to +80°C	
Installation	To be drilled for a horizontal surface	
Weight	175g ± 10 g	
Dimensions	57 mm x 43 mm x 70 mm	

3.2.2. Dimensions

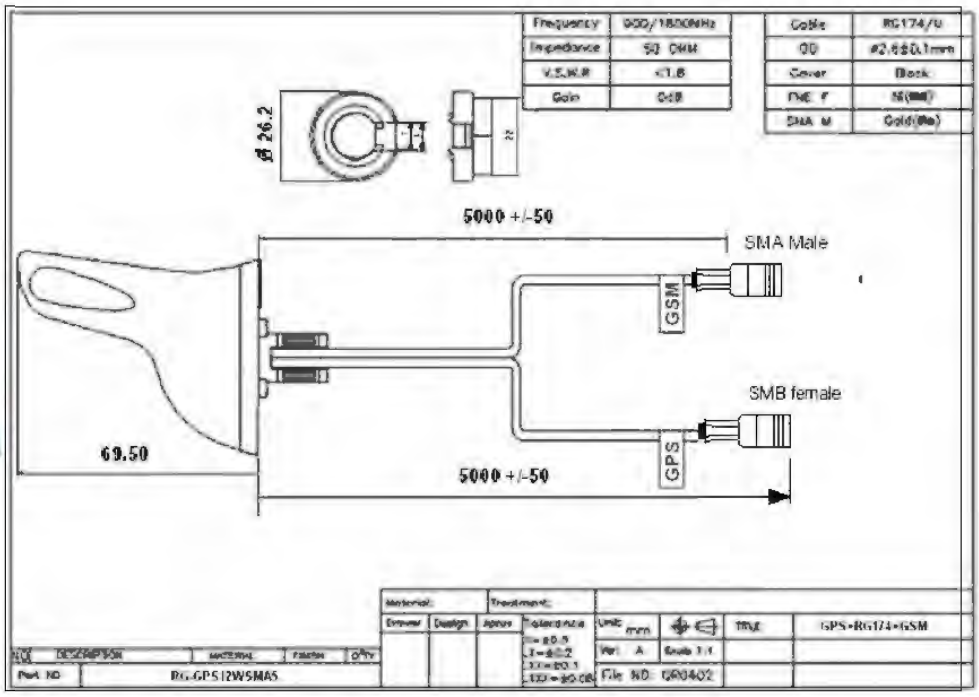

3.3. GPS/GPRS MODULE *(option)*

This module can be used both as a GPS and a GPRS.

3.3.1. Technical characteristics

3.3.1.1.Operating conditions

Temperatures
- Operating: -35°C to +85°C
- Storage: -40°C to +85°C

Humidity without Condensation
- Operating: HR < 70% @ +55°C

Atmospheric Pressure: normal
Weight: 95 grams

3.3.1.2.Power supply & consumption

Power Supply
- 5-32VDC GSM / DCS / Class 2 GPRS / GPS
- 5,5-32VDC Class 10GPRS

The modem is protected from over-voltage:
- internally for picks / transition >32VDC
  - by the fuse that is integrated into the power supply cable provided for the continuous >32VDC ; the modem is disconnected from the power supply.

CONDITIONS		E-GSM/GPRS 900MHz and GPS OFF	
		I name(mA)	I Max(mA)
Idle mode	5,5V	17,5	23
	12V	11,7	16,5
	32V	8,6	11,5
Idle mode 32K	5,5V	12	14,5
	12V	9,2	11,3
	32V	7,7	9,7
In com GSM 1RX/1TX Power (2W/1W)	5,5V	182,5	195,5
	12V	96	103,5
	32V	40	44,5
In com GPRS CL10 3RX/2TX Power (2W/1W)	5,5V	320	341
	12V	165	177
	32V	67	72
During TX bursts Power (2W/1W)	5,5V	1178	1400
	12V	600	712
	32V	230	274

Copyright © ACOREL

3.3.1.3.Performances

The RF performances are ETSI GSM 05.05 compliant.
The primary reception parameters are:

- For E-GSM900 the sensitivity is from -104 dBm
- For E-GSM1800 the sensitivity is from -104 dBm
- Selectivity is 200kHz: >9 dBc
- Linear flexible band : 63 dB
- Signal rejection for the same channel: >= 9 dBc

The primary emission parameters are:

- For E-GSM900 the maximum power is 33 dBm at the ambient temperature
- For E-GSM1800 the maximum power is 33 dBm at the ambient temperature
- For E-GSM900 the minimum power is 5 dBm +/- 5 dB at the ambient temperature
- For E-GSM1800 the minimum power is 0 dBm +/- 5 dB at the ambient temperature

3.3.1.4.MGPRS Protections

- By a fuse on the power supply cable : 2,5A 5x20mm
- Against any voltage below +32VDC
- Against polarised inversion of the continuous power +VDC

3.3.1.5.Connectors

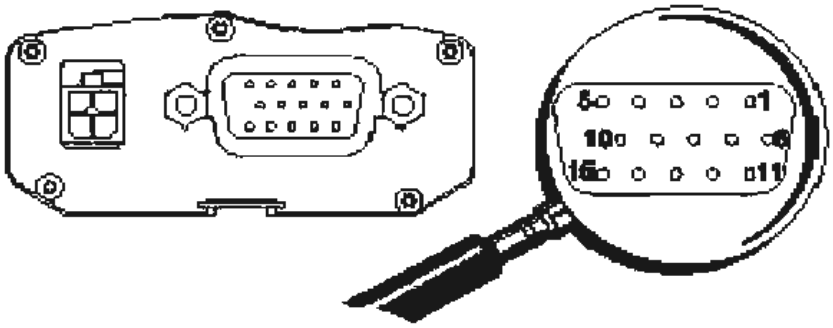

Copyright © ACOREL

3.3.1.6.Conformance

Complies with : **- R&TTE 1999/5/EC Directive,**

- Regulations of standard ETSI EN 301 489-7 (02)

- 95/54/EC Automotive Directive : e24*02*0997*00 ("e" Mark)

Safety : EN 60950 : 2000 3rd Edition

EMC :	EN 55022 : 1994	Conducted disturbance measurement
	EN 61000-4-2 : 1995	Electrostatic discharges immunity
	EN 61000-4-3 : 1996	Radiated radiofrequency disturbances immunity
	EN 61000-4-4 : 1995	Fast transient burst immunity
	EN 61000-4-6 : 1996	Conducted radiofrequency disturbances immunity

ISO 7637-1 Ed. 1990 Road Vehicles

CE

3.3.2. Dimensions

The MGPRS consists of an electronic card placed in a 73x54.5x25.5mm (not including connectors) aluminium box.

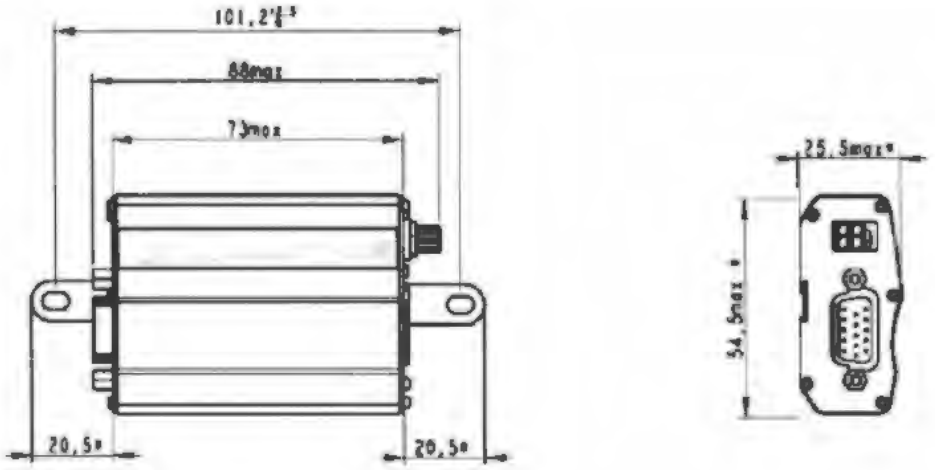

NB. : In order to anticipate the eventual use of a different GPRS module, it is suggested to leave a bit more space than what is necessary for the modem herein described. The designated space (not including connectors) should correspond to the following dimensions:

Length (not including connectors) x width x height = 135mm x 155mm x 45mm

In front are:

- The Micro-Fit 3.0™ female 4 Point connector for the power supply at 2 E/S
- The Sub-D HD 15 point connector for the 24V connections, transmission and GPS

Behind are:

- The SMA-F connector for the GSM antennae connection
- The GSM modem operating light
- The SMB-M connector for the GPS antennae connection
- The GPS operating light
- The SIM card drawer

On the bottom of the box is:

- The CE compliance sticker at the IMEI No.

3.4. Train Counting Module (MCT)

3.4.1. Functions

The MCT, enclosed in a small profile, includes the sensors and the electronics that control the counting at each door. Each MCT is connected to a Door Interface Module (MIP), which is also connected to the UCD.

The MCT role is to do :

- directional counting
- manage all maintenance tests and messages
- build a file every day with counting and maintenance information
- store data up to 30 days if there is a communication break

3.4.2. MCT Diagram – small door – 1 sensor

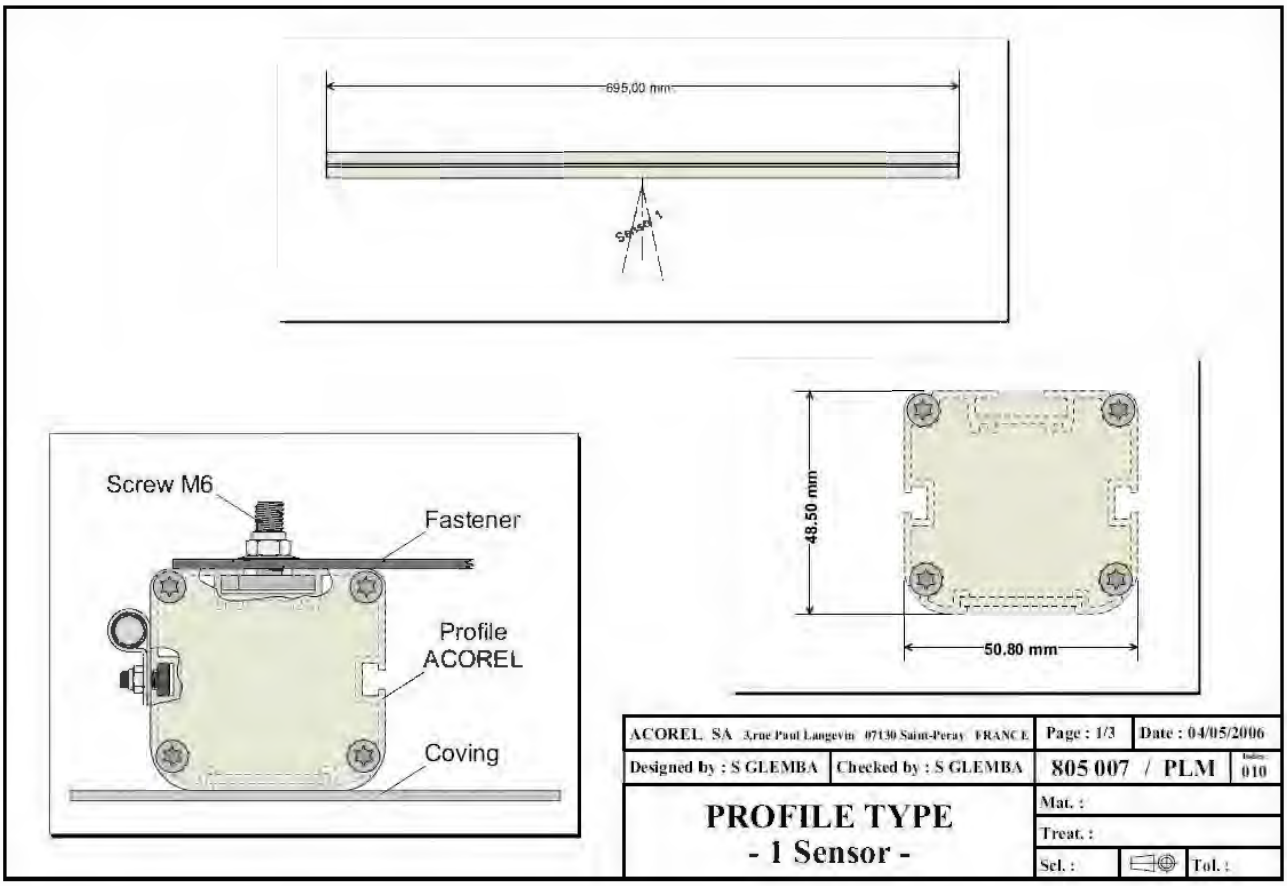

3.4.3. MCT Diagram – large door – 3 sensors

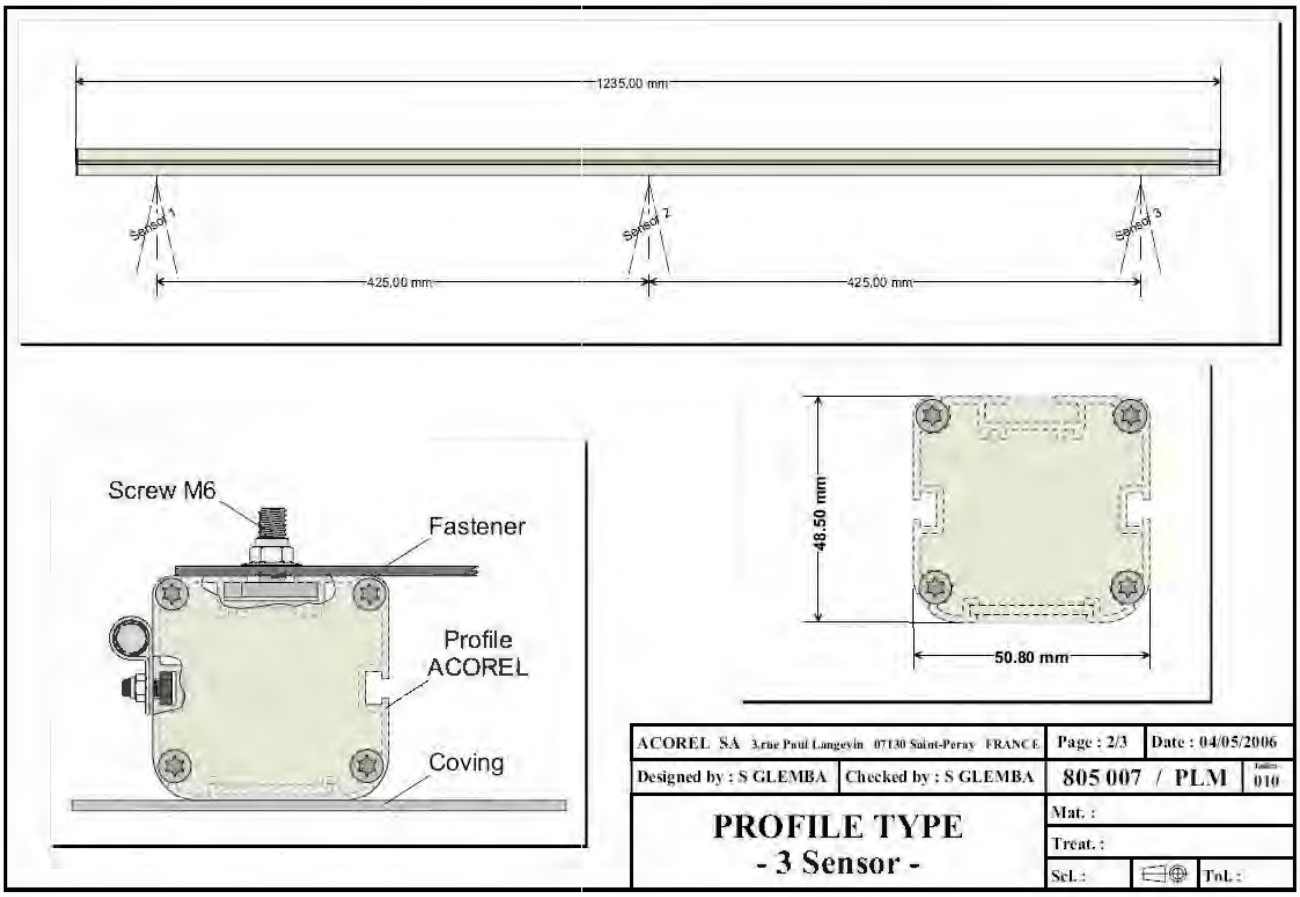

3.5. Door Interface Module (MIP)

3.5.1. Definition

Each MCT is connected to a Door Interface Module (MIP), which is also connected to the UCD.
The MIP allows communication between UCD and MCT.
The MIP role is to do :

- interconnect the MCT to the UCD via the IBIS bus
- interconnect the MCT to the power supply by the door
- tell the MCT the door status (open or close) so the MCT does not count when doors are closed

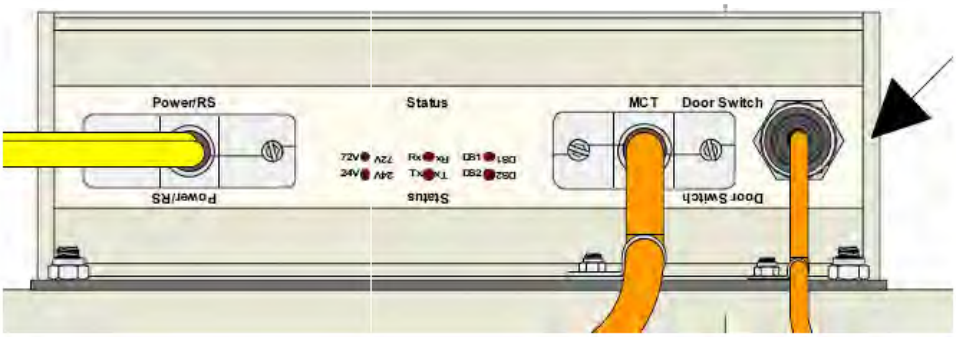

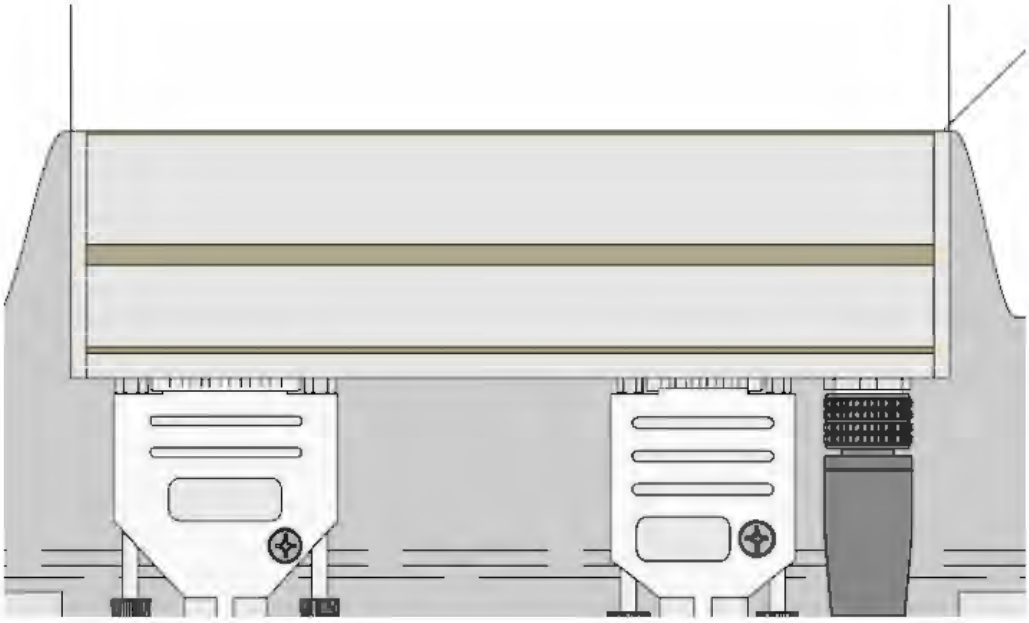

3.5.2. Dimensions

L 180mm x h 48.5mm x D 50.8mm

3.6. Pre-assembled KIT « MCT + MIP + Fixture kit + Microswitch »

The different equipment (MCT + MIP + Fixture kit + Microswitch) and the corresponding interconnecting cables are delivered pre-assembled for each door as shown in the following diagram.

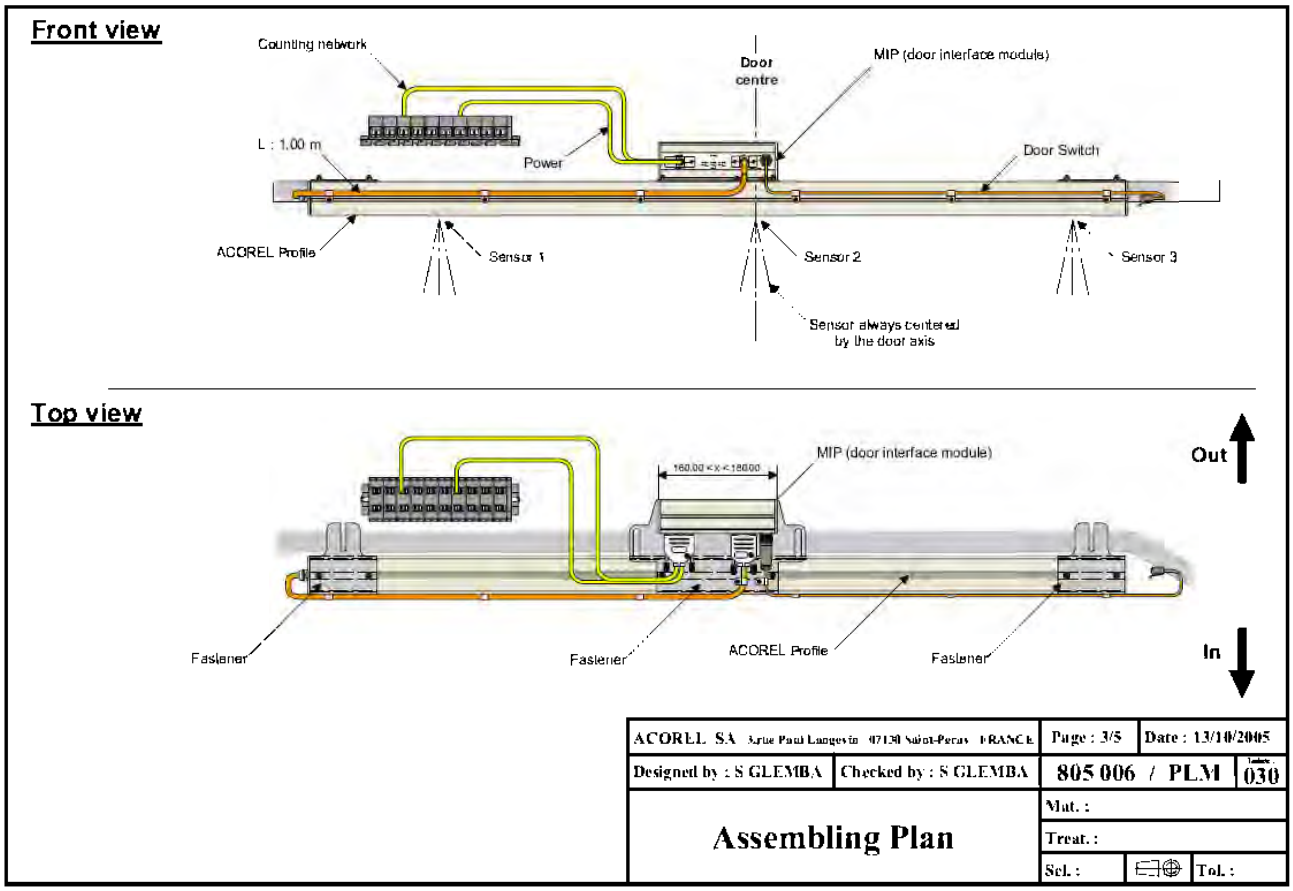

3.7. PROTECTION GRATES

3.7.1. Definitions

Empty (space between 2 wires) 1.9 mm
Wire Diameter: 0.25 mm
Visibility percentage 78%
Weight in m2 0.35Kgs

3.7.2. Dimensions

The following dimensions used to calculate the length and width of the hole to be done in the door panel.

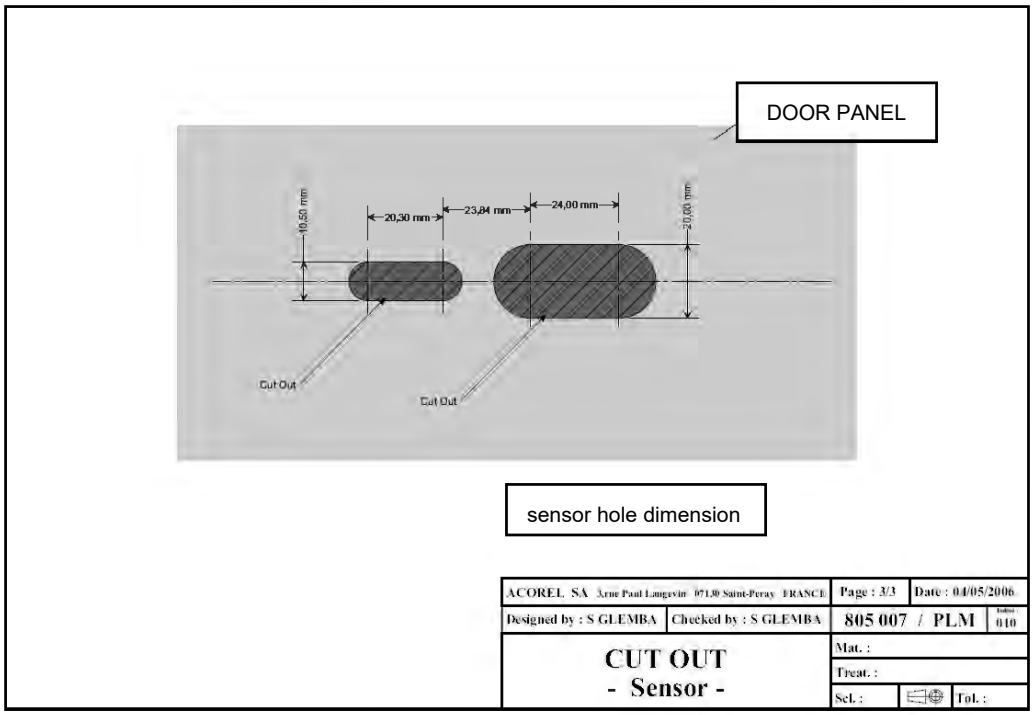

3.8. Cabling

Next to each MCT is a MIP that connects the equipment to the IBIS bus and to the continuous power supply (72Vdc and 0Vdc).

The pre-cabling between MCT & MIP is using a 0.6mm² screened triple cable (Cable reference: FLAMEX 24 16 3x0.60 BLG) enabling all the counting equipment to be ultimately connected to the UCD.

> **Note**: The continuous screened cabling is only available for the car. Continuity is not guaranteed during the articulation integration.

3.8.1. Module Cables « UCD/GPRS/GPS »

_ 72V Power supply: screened twisted cable (FLAMEX 24 16 2x0.60 BLG)
_ IBIS bus 1: TbD
_ IBIS bus 2: TbD

3.8.2. Module Cables « MCT/MIP »

_ 72V Power supply: screened twisted cable (FLAMEX 24 16 2x0.60 BLG)
_ IBIS bus: TbD

Copyright © ACOREL

3.9. Norms

3.9.1. General criteria

a) Guaranteed daily performance: 95% after qualification per access way type
b) Factory return: less than 0,1% on 10 years
c) MTBF Sensor: 200 000 H
d) MTBF Electronic Cards: 35 000 H
e) MTTR : 1 H
f) Average production time : 2 months

3.9.2. Specific criteria

STANDARDS:
Temperature Range: Unable temperature -25°C to +70°C with no freezing or condensing at low temperature.
Storage Temperature: -30°C to +80°C.
Protection Degree: IP54
Vibrations: EN50155 & CE177 or NF.F60002 compliant
Lightning & Sun : 30 000 lx max
Rain & Snow : Humidity 15 to 85% R.H (with no freezing or condensation)

COMPLIANCES:
EN50155 – 10.2.1
EN50155 – 10.2.2
EN50155 – 10.2.3
EN50155 – 10.2.4
EN50155 – 10.2.5
EN50155 – 10.2.6, EN50121-3-2, EN61000-4-2 & EN61000-4-5
EN50155 – 10.2.7, EN50121-3-2 & EN61000 4-4
EN50155 – 10.2.8, EN50121-3-2, EN55011, EN61000-4-3 & EN61000-4-6
EN50155 – 10.2.9
EN50155 – 10.2.10
EN50155 – 10.2.11
EN50155 – 10.2.12
EN50155 – 10.2.13
EN50155 – 10.2.14

EMC:
Certificates delivered by an independent certified normalisation company
AEMC Tel : +33 4 78 40 66 55
ZI de Mi-Plaine Fax : +33 4 72 47 00 39
7, rue Georges Méliès www.aemc-measures.fr
69680 CHASSIEU chassieu@aemc-measures.fr
France

AEMC prestataire de service dans le domaine de la CEM.
AEMC MEASURES est accrédité COFRAC
Organism competent & certified

Copyright © ACOREL Confidential

3.9.3. Cabling synoptic

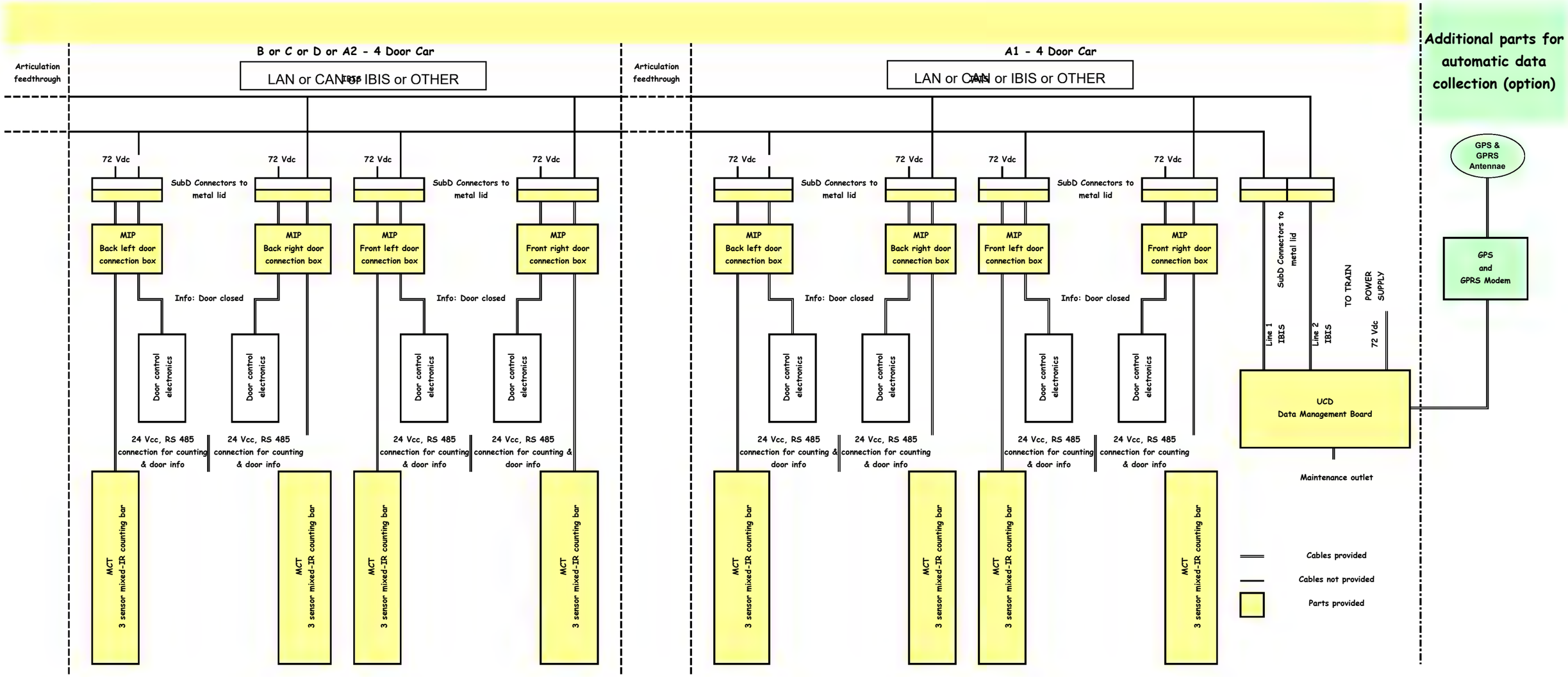

Document E-T01968	Edition 03	Date 07/07/17

Technical Specification

IRIS+VD - EDINBURGH
PASSENGER INFORMATION SYSTEM
for
EDINBURGH TRAM NETWORK (ETN)
CAF

SEPSA
SISTEMAS ELECTRONICOS DE POTENCIA, S.A.

C/ Albatros, 7 y 9 (Pol. Ind. La Estación)
Tel. (+34 91) 495 70 00
Fax. (+34 91) 692 11 45(SCI/I+D)
28320 PINTO (Madrid) ESPAÑA

CONTROL OF EDITIONS AND MODIFICATIONS

EDITION	MODIFICATIONS
00	Base edition
01	Video Information system included in the base offer
	New front sign included in the base offer
	Included optional external side sign
02	Modified Chapter 8 and 9
03	Modified Chapter 3 and Chapter 8: T26
	Added Chapter 9: Option 2, Option 3 and Option 4

03	07/07/17	M. Baudet	G. Mateos	P. de la Antonia
02	07/01/22	M. Baudet	G. Mateos	P. de la Antonia
01	06/11/17	M. Baudet	G. Mateos	P. de la Antonia
00	06/09/27	M. Pesquera	G. Mateos	P. de la Antonia
EDITION	DATE	PREPARED	REVISED	APPROVED

This information is property of SEPSA. All rights reserved

INDEX

1.- OBJECT 2

2.- SCOPE 2

3.- APPLICABLE REFERENCES 2

4.- DEFINITIONS AND ACRONYMS 2

5.- RESPONSIBILITIES 2

6.- SYSTEM GENERAL DESCRIPTION 2

- 6.1.- Operation Background 2
- 6.2.- System Functions 2
- 6.3.- System Architecture 2

7.- SYSTEM FUNCTIONAL REQUIREMENTS 2

8.- SYSTEM TECHNICAL REQUIREMENTS 2

9.- OPTION 2

10.- SCOPE OF SUPPLY 2

1.- OBJECT

This specification is applicable to the IRIS+VD Edinburgh, Passenger Information System – Edinburgh Tram Network.

2.- SCOPE

The present technical Specification defines the functional and technical requirements of the Passenger Information System (PIS) offered for its installation on the Edinburgh Tram Network to be furnished by CAF.

3.- APPLICABLE REFERENCES

[1] **Edinburgh Tram Network, Tram Requirements Specification. Employer Requirements,** Doc Ref: ULE90130-SW-SW-SPN-00059 V7

[2] **General Diagram,** SEPSA, S046732-E, ed. B

[3] **Communication Control Unit CCU,** SEPSA, S046738-E, ed. B

[4] **Front Sign,** SEPSA, S046744-E, ed. B

[5] **Front Sign (Colour Option),** SEPSA, S049142, ed A

[6] **Internal Sign,** SEPSA, S046747-E, ed. C

[7] **External Side Sign,** SEPSA, S046750-E, ed. C

[8] **External Side Sign (Colour Option),** SEPSA, S049143, ed A

[9] **Interior Loudspeaker,** S046758-E, ed. B

[10] **Cab Loudspeaker,** S046759-E, ed. B

[11] **Intercom,** S046760-E, ed. B

[12] **Noise Sensor,** SEPSA S046761-E, ed. B

[13] **Microphone,** SEPSA, S046762-E, ed. B

[14] **Video Screen Power Supply,** SEPSA, S046763-E, ed. B

[15] **Monitor Remote Unit,** SEPSA, S046765-E, ed. B

[16] **Media & Communications Controller,** SEPSA, S046766-E, ed. B

[17] **Video Screen ,** SEPSA, S046767-E, ed. B

[18] **Access Point,** SEPSA, S047570, ed. A

[19] **EN 50155. Railway applications. Electronic equipment used on rolling stock. Nov. 1995.**

[20] **EN 50128. Railway applications. Communications, signalling and processing system. Software for railway control protection systems.**

[21] **NF F 16101. Matériel roulant ferroviaire. Comportement au feu. Choix des matériaux.**

[22] **NF F 16102. Matériel roulant ferroviaire. Comportement au feu. Choix des matériaux, application aux équipements électriques.**

[23] **EN 50126. Railway applications. The specification and demonstration of Reliability, Maintainability, and safety (RAMS). September 1999.**

[24] **IEC 61373, 1999-01. Railway applications – Rolling Stock Equipment – Shock and Vibration Tests.**

[25] **EN 50121-3-2, June 2001. Railway Applications Electromagnetic Compatibility Part 3-2: Railway Stock. Apparatus.**

[26] **IEC 60529. Degrees of protection provided by enclosures (IP code).**

NOTE: The drawings which form part of the technical offer give an approximate idea, however not a definitive one, of the system. They can be adapted during the project phase as a result of requirements, which emerge during the project development.

4.- DEFINITIONS AND ACRONYMS

ATP	Automatic Train Protection
BV	Battery Voltage
CAF	Construcciones y Auxiliar de Ferrocarriles S.A
CCU	Central Communication Control Unit
CSp	Cab Loudspeaker
DVAS	Digital Voice Announcement System
DV+	Central Media & Communication Unit
ER	Event Recorder System
FS	Frontal sign
IRIS	Información y Registro Integrado de SEPSA **(**SEPSA's PIS)
IS	Internal Sign
ISp	Public Loudspeaker
MCC	Monitor and Communications Controller
MDS	Monitoring and Diagnostic System
MRU	Monitor Remote Unit
PC	Personal Computer
PIS	Passenger Information System
PTT	Push To Talk
SEPSA	Sistemas Electrónicos de Potencia, S.A
SS	External Side Sign
TU	Train Unit
TCMS	Train Control & Monitoring System
VGA	Video Graphics Array
VS	Video Screen

5.- RESPONSIBILITIES

It is the responsibility of the Project Manager to maintain and update this Technical Specification.

6.- SYSTEM GENERAL DESCRIPTION

6.1.- Operation Background

The communication system will be integrated in the trams of Edinburgh Tram Network to be furnished by CAF.

The tram will be composed of a number of articulated modules car forming a unique Train Unit. The train units will be operated in train-lengths of one (1) train unit. Additionally, in a failure situation, two units could be couple in order to be towed

Each train unit will have two driving cabs and a permanently fitted emergency coupler so that two train units can be coupled.

A more complete description of the train unit is provided in document references.

The system will be conceived so that it can be operated and can interact with other systems in the train such as the Train Control & Monitoring System, the Event Recorder System, etc. with which it will share the train unit bus. The Communication System will be connected to the train unit bus.

6.2.- System Functions

The most important functions of the Communication System are the following:

- Direct capture of discrete variables through their physical inputs.
- Support for the Passenger Information Systems.
- Management of the public address connections enabling communications such as: Cab- Intercom, Cab-Cab, Cab-Public Address, Announcer-Public Address, Radio-Public Address and Cab-Control Centre.
- Selection of line and route to be taken.
- Voice and Visual announcement for the next station along the route, connections, and other special messages associated with each station for the passengers on board.
- Voice and Visual announcement of special messages in relation to unit operational conditions.
- Indication of train location to passengers inside the train and those on platforms.
- Indication of train destination to passengers inside the train and those on platforms.
- Support of configuration/change of lines and routes on which the train will circulate.
- Control of the audio level in the train unit as a function of occupation (estimated from the car's weight supplied by another system), as a function of speed and as a function of ambient noise.
- Support of serial communications through the RS485 train bus and through the train Public Address and Intercom Audio Lines.
- Support of communications through the RS485 car buses.
- Configuration of functional parameters.
- Operation self-checking mechanism.
- Generation of warning tones.
- Support of a Media & Communications System integrated within the basic Passenger Information System.

6.3.- System Architecture

The system architecture is shown in drawing S046732-E.

The system consists of 2 Front Signs FS, 4 External Side Signs SS, 6 Internal Signs IS, 20 Interior Loudspeakers ISp, 2 Cab Loudspeakers CSp, 2 Noise Sensors NS, 2 Microphones MIC, 8 Passenger Intercoms INT, 8 Monitor Remote unit, 8 Video screen, 4 Video Screen Power Supply, 1 Access Point, 1 Communication Control Unit with Digital Voice Announcement System DVAS and connection to the train bus and 1 Media and communication Controller with connection to the CCU.

All Signs and Passenger Intercoms INTs are offered with RS485 interface to Communication Control Units car buses.

The Media & Communication Controller will have the following features:

- It will have a Wireless Access Point which allows multi client broadcast access and fast data transfer with wireless external routers within a minimum 50 metres radius of a stationary point.
- The Wireless AP will be based on WiFi technology fulfilling the IEEE 802.11g standards.
- Software necessary to carry out its functionalities.
- It will be configurable to ensure that all external connectivity will be controlled and secured.
- It will be able to receive and handle messages from the Passenger Destination Management System, the Passenger Counting System, the Passenger Surveillance System and the Passenger Audio System by means of exchange of files.
- However, it will not be possible to oversee the files and information of the systems not supplied by SEPSA during the train operation (for example the Passenger Counting System).
- Internal connectivity that will allow high-speed streaming of high-bandwidth multi-media content, and which will prevent any external interference.
- It will be scalable in order to manage a range of other hardware configurations.

The Media & Communications Controller of the Media & Communication System will be connected to the CCU. This Media & Communications Controller MCC will transmit video to the 8 Video Screens with enough quality. Each Video Screen will receive the video from the Monitor Remote Unit, which will set up the video for its broadcasting. In addition, the MCC will be connected to a wireless Access Point by Ethernet connection.

The contents' update of the Media & Communications Controller will be done in a yard. For this function SEPSA will supply one yard's access point and the software necessary to carry out the update. SEPSA will not supply the PC where this software will be installed.

It will be possible to connect the Access Point to a Switch Ethernet in a LAN having the PC located in a different room or area, but always connected to the same LAN than the

Switch Ethernet and the WiFi access point. The software will allow uploading the video and audio information to be displayed in the train. Each train will have a contents list and a register of the operations that will be saved in a database contained in the PC.

The communication system is completed with the PC software to configure the routes, to upload the text messages for to signs and the MP3 audio messages to be broadcasted in the train according to its location along the route.

7.- SYSTEM FUNCTIONAL REQUIREMENTS

The IRIS - VD System functional features are the following:

F.1 Each Communication Control Unit will capture the status of direct discrete inputs proceeding from the statuses of potential free contacts, contacts supplied at BV or supplied at 24 Vdc. An antirebound filtering will be applied to the above-mentioned direct discrete inputs.

For every discrete captured signal there will be a mask, which will allow the signal's standby status to be set in such a way that its activation will always appear as a logic '1' in memory.

F.2 It will have the capacity to exchange information via serial communication with other systems through the train unit/car bus RS-485. The information to be exchanged will be: discrete variables, analogue variables, driving parameters, texts for the announcement signs, configuration parameters, etc.

F.3 It will automatically control the sound level of the passenger announcements depending on speed (three discrete levels). The speed will be supplied by any other system in the train (Monitoring System MDS or ATC system).

F.4 It will automatically control the sound level of the passenger announcements depending on occupation (two discrete levels). This occupation will be deduced from the weight of the car, which will be supplied by another system in the train (Monitoring System MDS).

F.5 It will automatically control the sound level of the passenger announcements depending on ambient noise (one discrete level).

F.6 Management of the two available audio lines for establishment of the required public address connections, allowing two connections to be simultaneously established (i.e. Cab-Intercom and Public Address), if these do not share resources.

F.7 The connections for the communication system are:

- Generation of the door close tone (beep-beep).
- Cab with Cab.
- Intercom with Cab.

- Cab with Public Address.
- Audio announcements pre-recorded automatically or manually and controlled from the cab.
- Station Announcement System with Public Address.
- Radio with Public Address.
- Radio with cab.

F.8 The interruption/cancellation of an established connection can be set if another having higher priority is established. The priorities will be established during the project phase

F.9 The Digital Voice Announcement System (DVAS) will operate based on line data, location of the train along the route and door opening/closing signals, which will be provided by other systems in the train (MDS, the ER system or the ATP system).

F.10 The Announcement system will contain the stations table and their location along the route for each of the lines along which the train is to circulate. These tables will include the kilometre points at which the next stop announcements are to be made.

F.11 The Announcement system will also provide support for other station-related messages, in particular: connections with other routes, ends of price-zones and other messages.

F.12 The Communication Control Unit CCU will control the information to be displayed in the internal signs, in the front signs and in the external side signs.

F.13 For the information to be shown in the internal signs, in the front signs and in the external side signs the Communication System will use the information provided by the driver through the Cab Terminal, which will belong to the Train Control & Monitoring System.

F.14 During the trip, the signs will use the information provided by the station announcement system DVAS.

F.15 The system will allow the definition of the routes along which the train is to circulate and the loading of its configuration and messages into the DVAS station announcement system.

F.16 The system will permit the uploading of the digital audio for the station messages and of the data for the signs messages associated to the stations where the trains are to circulate. This is also applicable to other special audio messages handled by the announcement system.

F.17 The Communication Control Unit CCU will include suitable human/machine interfaces for the display of system operation and failure statuses.

F.18 The Communication Control Unit CCU will be fitted with suitable human/system interfaces for local parameter configuration and operation conditions, either by means of a laptop computer connected to the CCU or using a screen and a keyboard incorporated in the central unit CCU itself.

F.19 Using the Communication Control Unit human / machine interface the system will be able to show:

- Versions of the programs being executed in its equipment.
- The version of the configuration tables of the above.
- The system operational/failure status.
- The value of the configured parameters.
- The values of adjustment variables, etc.
- The date and time of the internal clock.
- The statuses of the discrete captured variables.
- Audio matrix output relays statuses, which establishes the public address connections.

Part of this information could be sent to the Monitoring and Diagnostic System MDS.

F.20 The Communication Control Unit human / machine interface will permit to:

- Configure the Serial Number in which the Communication Control Unit is installed.
- Carry out front, external side and internal signs tests to check communications and LED diodes integrity.
- Carry out tests of the announcement system to verify correct configuration of each line and suitable message texts and station name audio digitisation.
- Modify the date and time of the internal clock.
- Change the password.
- Define the stand-by status masks for the discrete captured signals.
- Modify the audio levels for each public address connection.
- Modify speed thresholds for public address levels correction.
- Modify noise thresholds for public address levels correction.
- Modify occupation thresholds for public address levels correction.
- Provide a test location to the Digital Voice Announcement System.
- Load the announcement system configuration tables.
- Carry out test “walk through” of signs and emergency intercoms.

Part of this information could be sent to the Monitoring and Diagnostic System MDS.

F.21 All the system’s configuration operations will be protected by a password, which will be modifiable.

F.22 The system will have the necessary means to prevent its permanent blocking due to program failure (watchdog).

F.23 The system's interface with the operator will show its performance status and internal failures detected by its self-checking mechanism. The system's interface with the operator will be by means of the Cab Terminal as well as a screen and a keyboard incorporated in the central unit Communication Control Unit CCU as well as the laptop computer.

F.24 The IRIS data could be shown on others displays which belong to different systems such as the Monitoring and Diagnostic System.

F.25 There will be two Cab Terminals per train unit composed of a touchscreen TFT 10.4'' display. These Cab Terminals will be shared with the TCMS. Additionally, the system will permit to install dedicated Cab Terminals for PIS functionalities.

F.26 The equipment will adjust its time to commands received from any other system in the train or entered through the Cab Terminal.

F.27 The system will incorporate a record of its own events.

F.28 The Communication Control Unit CCU will have the capability of performing a self-test.

F.29 Every pair of doorways will be equipped with Passenger Intercoms. Each intercom station will consist of a speaker, a microphone and an activation button.

F.30 The activation of the associated intercom will signal the crew in the cab. Thus, the crew will be able to establish a communication circuit with that Intercom when it has been activated. The crew will also have the ability to put that Intercom "On Hold" in order to use the radio or establish a Cab-Cab communication.

F.31 If more than one Intercom station is activated, the crew will have the ability to answer them in the order received, and to put other Intercom stations "on hold" as needed. The crew will also have the ability to disconnect a station if person keeps activating the intercom.

F.32 The IRIS Communication Control Unit CCU will be equipped with an Ethernet port to download its events record to a laptop computer (Portable Test Unit PTU).

F.33 The Communication system will be commanded from the Cab Terminal.

F.34 In addition a Cab Loudspeaker and a gooseneck microphone will be supplied in each cab to manage the Public Address and the Intercom Communication. Besides, it will be capable of addressing the speakers broadcasting a message to the internal speakers. It will also be composed of an intercom chime and a potentiometer to control the Intercom Speaker Volume Control.

F.35 Every destination name shown in the signs will be in English.

F.36 The signs will be capable to display characters like “q” or “p” without raising these characters at the same level of characters like “a” or “c”.
It can be explained better in the following figures:

Raising the characters

No raising the characters.

8.- SYSTEM TECHNICAL REQUIREMENTS

The IRIS - VD System technical features are the following:

T.1 The Communication Control Unit and the signs will work supplied with train battery voltage Vb +25% / -30% according to regulation EN 50155. The rest of the equipment will be supplied from the Communication Control Unit.

T.2 IRIS system operating temperature range will be compliant with category T3 according to regulation EN 50155 except for the memory module.

T.3 IRIS system storage temperature range will be compliant with category T3 according to regulation EN 50155 except for the memory module.

T.4 The degree of protection of equipment’s casing installed in the cabinet in addition to equipment installed in the cabs and in the passenger saloons such as intercoms, the public loudspeakers will be IP30 according to regulation IEC 60529.

T.5 The degree of protection of the casing of the signs in its side visible to the passengers will be IP65 according to regulation IEC 60529.

T.6 The degree of protection of the Communication Control Units CCU will be IP20 according to regulation IEC 60529.

T.7 The equipment will withstand vibrations according to regulation IEC 61373 of 1999-01 Category 1 Class B.

T.8 The equipment will withstand impacts according to regulation IEC 61373 of 1999-01 Category 1 Class B**.**

T.9 The equipment's dielectric strength will withstand 1000Vrms 50Hz for 1 minute, applied between the chassis and the power supply terminals according to regulation EN 50155.

T.10 The level of insulation between the chassis and the power supply terminals will be greater than 20MΩ at 500Vdc according to regulation EN 50155.

T.11 All the equipment will meet the EMC requirements and the electrical service conditions specified in paragraph 3 of regulation EN 50155 and will meet the requirements of the tests specified in section 10 of that standard.

T.12 All the equipment will meet the EMI/EMC requirements according to regulation UNE-EN 50121-3-2.

T.13 The Digital Voice Announcement System will be equipped with enough memory to store configurations of a minimum of 5000 seconds of audio distributed in a minimum of 240 different stations names, a minimum of 16 characters to be distributed between station names and a minimum of 20 special messages.

T.14 The recorded messages will be stored in MP3 format.

T.15 The bandwidth of the amplifiers will be 200Hz < f < 10000Hz.

T.16 The total harmonic distortion will be less than 1% at 1 kHz for a power of 12 + 12 Vrms.

T.17 The construction materials for the system equipment will fulfil the requirements of regulations NF N 16101 and NF F 16102 level A1 with regard to fireproofing and fume emissions (trains for tunnel service).

T.18 The discrete inputs will be able to detect potential free contacts with a contact-cleaning circuit, contacts supplied at Vb draining 1mA and contacts supplied at 24Vdc draining 10mA. They will have a contact cleaning circuit.

T.19 The Passenger Emergency Intercom will be vandal resistant and will be equipped with a heavy-duty faceplate.

T.20 The audio control is to be furnished and installed in each operator's cab and will consist of:

- Gooseneck microphone;

- Mode buttons to select the Public Address PA mode or the Passenger Intercom mode;
- Push-To-Talk button;
- Intercom Speaker Volume Control;
- Intercom chime and indication light.

Buttons will be vandal resistant and will be equipped with indication lights.

T.21 Internal signs will be fitted with yellow LED diodes on a black background.

T.22 Internal signs will display characters of 50 mm high.

T.23 Internal signs will have a resolution of 8x96 LED diodes.

T.24 Internal signs will have an RS485 interface with the communication control units installed in its cars.

T.25 Front signs will be fitted with yellow LED diodes on a black background.

T.26 Front signs will have characters heights of 165 mm and may display up to 12 characters in one line. Its resolution is 24x168 LED diodes.

T.27 Front signs will have an RS485 interface with the communication control units installed in its cars.

T.28 External side signs will be fitted with yellow LED diodes on a black background.

T.29 External side signs will be display characters of 50 mm high.

T.30 External side signs will have a resolution of 8x96 LED diodes.

T.31 External side signs will have an RS485 interface with the communication control units installed in its cars.

9.- OPTION

1: Colour External Frontal Signs

As an option SEPSA offers to change the basic frontal signs for other ones which are capable to display different colours (three different colours) squares in front of the destination message.

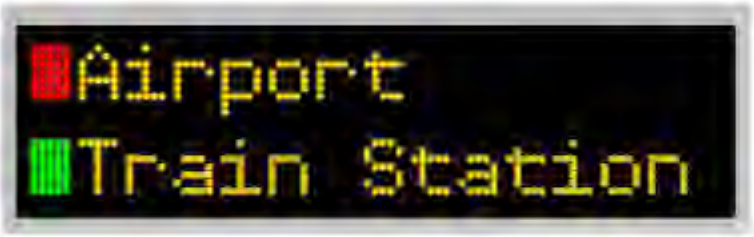

These signs will be fitted with 24x8 tri-colour LED diodes and 24x168 yellow LED diodes on a black background and they have an RS485 interface with the communication control units installed in its cars.

The dimensions and details of these optional signs may be seen in drawing S049142-E.

2: Colour External Side Signs

As an option SEPSA offers to change the basic side signs for other ones which are capable to display different colours (three different colours) squares in front of the destination message.

These displays have characters heights of 50mm and may display up to 12 characters in one line.

External side signs will be fitted with 8x8 tri-colour LED diodes and 8x96 yellow LED diodes and on a black background and they will have an RS485 interface with the communication control units installed in its cars.

The dimensions and details of these optional signs may be seen in drawing S049143-E.

10.- SCOPE OF SUPPLY

If there is any difference between the scope of supply of this technical specification and the scope of supply of the economic offer only the scope of supply of the economic quotation will be taken into account.

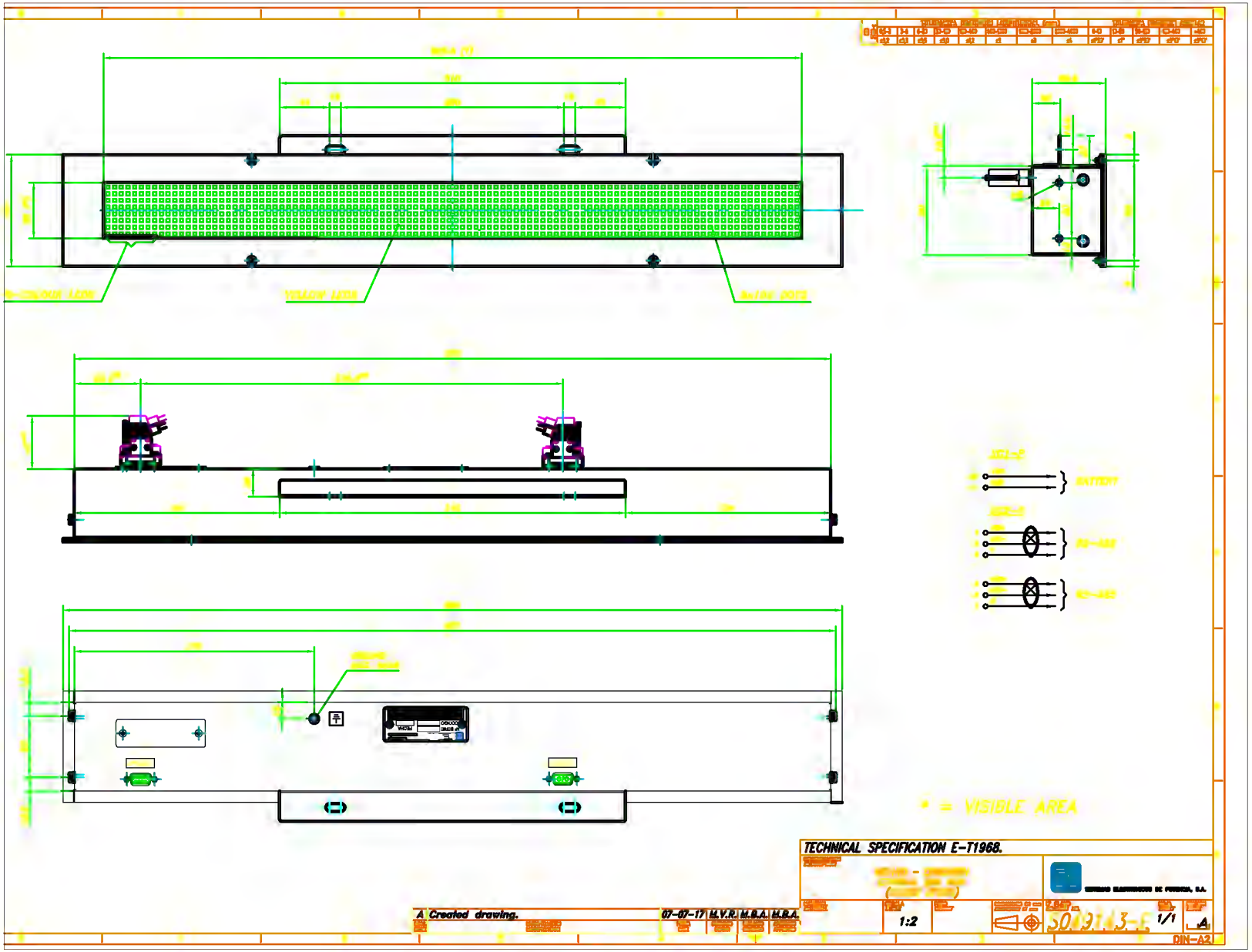

USB00000086_0683

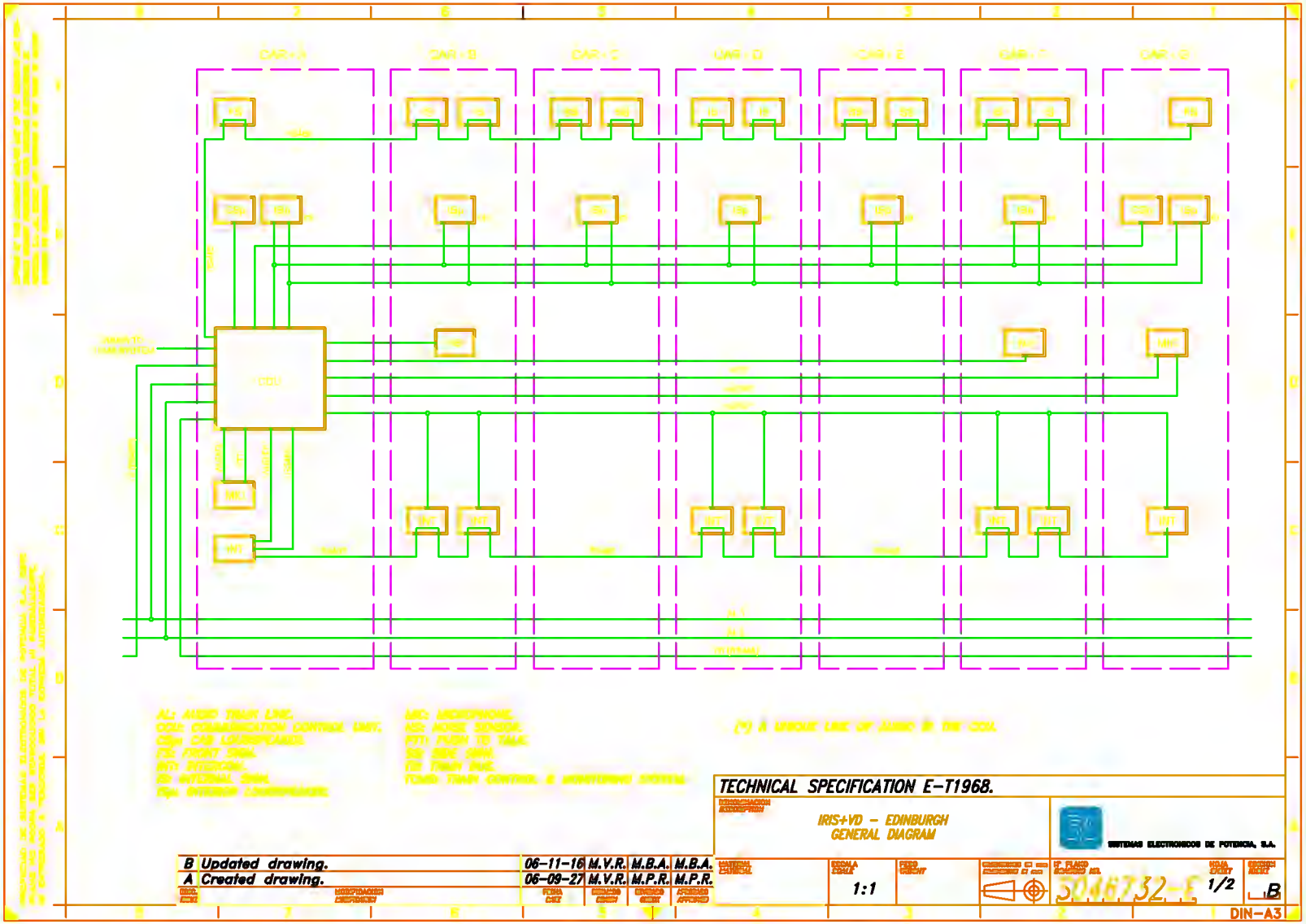

USB00000086_0684

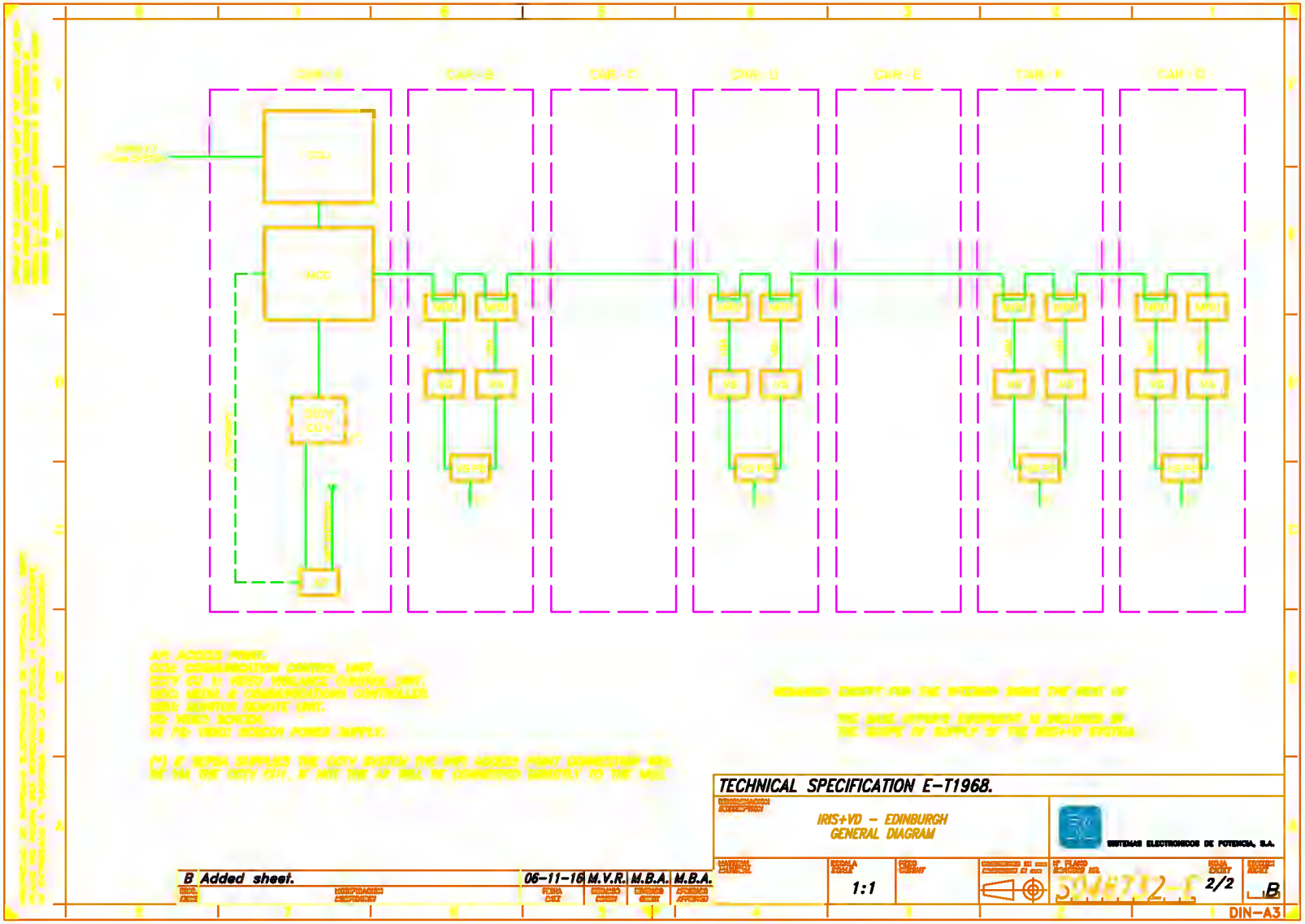

USB00000086_0685

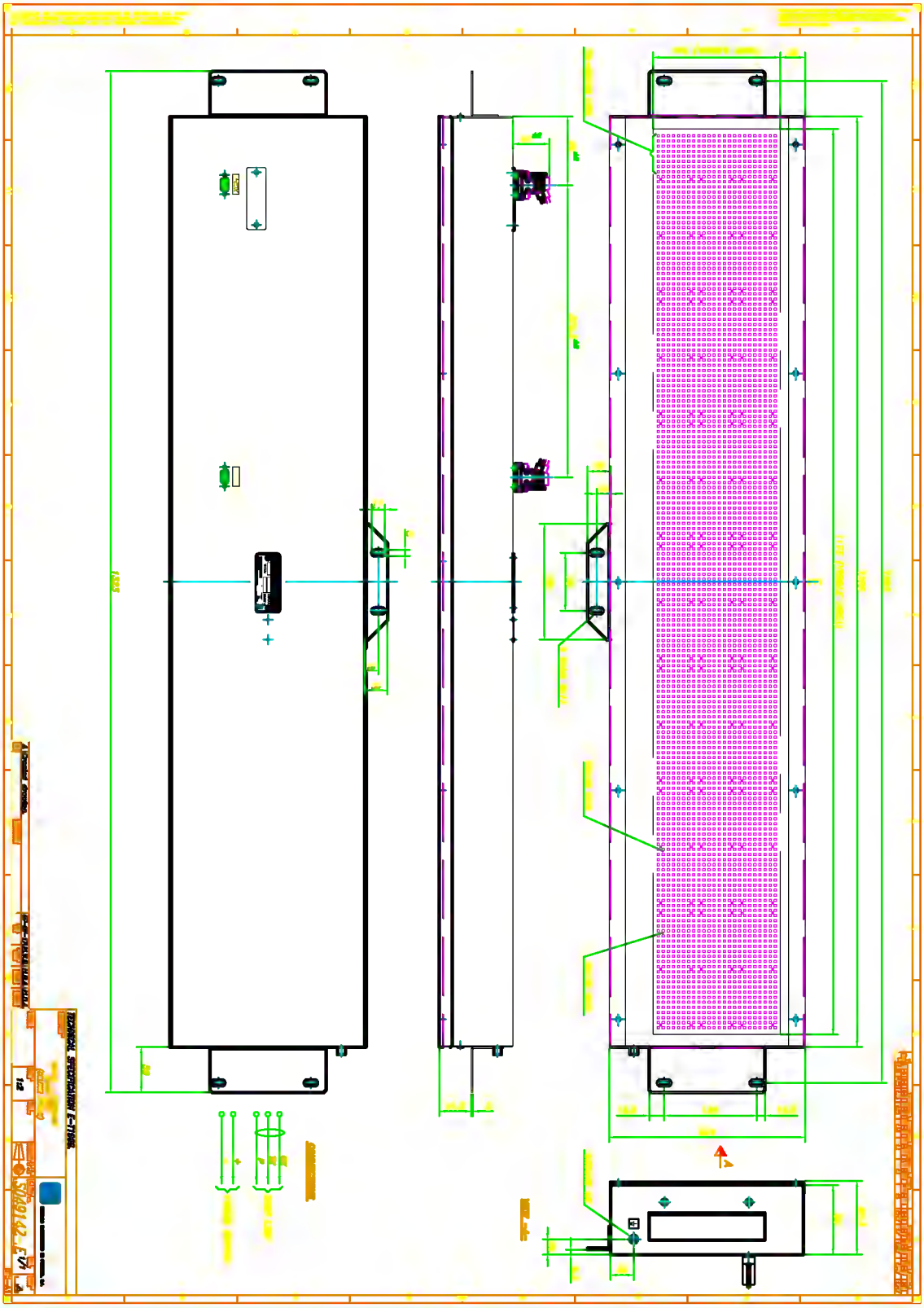

Document E-T01970	Edition 00	Date 06-10-03

Technical Specification

SICAS – EDINBURGH

For

Edinburgh Tram Network (ETM)

CAF

SEPSA
SISTEMAS ELECTRONICOS DE POTENCIA, S.A.

C/ Albatros, 7 y 9 (Pol. Ind. La Estación)
Tel. (+34 91) 495.70.00
Fax. (+34 91) 692 11 45(SCI/I+D)
28320 PINTO (Madrid) ESPAÑA

CONTROL OF EDITIONS AND MODIFICATIONS

EDITION	MODIFICATIONS
00	Base edition

00	06.10.03			
		M. Baudet	G. Mateos	P. de la Antonia
EDITION	DATE	PREPARED	CHECKED	APPROVED

This information is the property of SEPSA. All rights reserved

CONTENTS

1.- OBJECT 1

2.- SCOPE 1

3.- APPLICABLE REFERENCES 1

4.- DEFINITIONS AND ACRONYMS 1

5.- RESPONSIBILITIES 2

6.- GENERAL DESCRIPTION OF THE SYSTEM 2

6.1.- Operation Context 2

6.2.- System Functions 2

6.3.- System Architecture. 3

7.- FUNCTIONAL REQUIREMENTS OF THE SYSTEM 4

8.- TECHNICAL REQUIREMENTS OF THE SYSTEM 7

9.- SYSTEM SUPPLY LIST 9

1.- OBJECT

This Technical Specification defines the functional and technical requirements of the SICAS – EDINBURGH.

2.- SCOPE

This Technical Specification is applicable to the SICAS for its installation on the Edinburgh Tram Network to be furnished by CAF.

3.- APPLICABLE REFERENCES

[1] **Tram Requirements Specification,** Edinburgh Tram Network ULE90130-SW-SW-SPN-00059 V7, April 2006.

[2] **General Diagram**, SEPSA, S046779-E, ed. A

[3] **Cab Terminal,** SEPSA S046823-E, ed. A

[4] **Central Unit,** SEPSA, S046780-E, ed. A

[5] **EN 50155. Railway applications. Electronic equipment used on rolling stock. Nov. 1995.**

[6] **NF F 16101. Matériel roulant ferroviaire. Comportement au feu. Choix des matériaux.**

[7] **NF F 16102. Matériel roulant ferroviaire. Comportement au feu. Choix des matériaux, application aux équipements électriques.**

[8] **EN 50128. Railway applications. Communications, signalling and processing systems. Software for railway control and protection systems. March 2001.**

[9] **EN 50126. Railway Applications. The specification and demonstration of Reliability, Availability, Maintainability and Safety (RAMS). September 1999.**

[10] **ICE 61373, 1999-01. Railway Applications – Rolling Stock Equipment – Shock and Vibration Tests.**

[11] **EN 50121-3-2, June 2001. Railway Applications Electromagnetic Compatibility Part 3-2: Railway Stock. Apparatus.**

[12] **IEC 60529. Degrees of protection provided by enclosures (IP code).**

[13] **IEC 61375-1. Electric railway equipment. Train Bus Part 1. Train Communication Network. Sep. 1999.**

NOTE: The drawings that form part of the technical bid give an approximate (but not definitive) idea of the system. They may be adapted during the design phase as and when needs arise.

4.- DEFINITIONS AND ACRONYMS

BV	Battery Voltage
CAF	Construcciones y Auxiliar de Ferrocarriles S.A.

CESIS	Central Estática de Seguridad Información de SEPSA (Event Recording System)
CT	Cab Terminal
IRIS	Sistema de Información y Comunicación de SEPSA **(**SEPSA's Passenger Information and Communication System)
MVB	Multifunction Vehicle Bus. Train Communication Network bus
PC	Personal Computer
SEPSA	Sistemas Electrónicos de Potencia, S.A.
SICAS	Sistema Integrado de Control de Auxiliares de SEPSA (SEPSA's Train Control and Monitoring System)
TCM	Terminal de Configuración y Mantenimiento (Portable Configuration and Maintenance Unit)
UT	Unidad de Tren (Train Unit)

5.- RESPONSIBILITIES

The Project Manager is responsible for maintaining and updating this Technical Specification.

6.- GENERAL DESCRIPTION OF THE SYSTEM

6.1.- Operation Context.

The communication system will be integrated in the trams of Edinburgh Tram Network to be furnished by CAF.

The tram will be composed of a number of articulated modules car forming a unique Train Unit. The train units will be operated in train-lengths of one (1) train unit. Additionally, in a failure situation, two units could be coupled in order to be towed.

Each train unit will have two driving cabs and a permanently fitted emergency coupler.

A more complete description of the train unit is provided in document references.

The system will be integrated to function in conjunction with CESIS, IRIS, auxiliary systems, etc., with which it will share the standard data communication network (TCN) and/or the car bus (RS485).

6.2.- System Functions.

The most important functions of the SICAS system are:

- Direct capture of discrete and analogue variables through its physical inputs.
- Capture of discrete and analogue variables through serial line communications.

- Monitoring of the train's auxiliary systems by running a PLC programme. In this bid, no control function provided by the PLC is supplied by SEPSA.
- Analysis of fault conditions and presentation of these conditions in real time. The analysis is performed by the PLC programme.
- Chronological recording of events with environment variables in order to facilitate maintenance of the train's systems.
- Serial communication support through the MVB bus of the TCN.
- Serial communication support through the RS-485 car bus.
- The recorded events can be displayed and analysed on an external computer (external to the system)
- Configuration of functional parameters.
- Auto-check of functioning.

6.3.- System Architecture.

The system's architecture is represented in drawing S046779-E.

Each car with cab will incorporate a Cab Terminal and two Central Units giving support to direct inputs and outputs and inputs and outputs through MVB train unit bus and through RS485 car buses.

The Cab Terminals will also support the running of the train's PLC, which will be centralized. Both terminals will run the PLC program but only one of them will refresh the System's outputs. If a failure occurs in the active PLC, the PLC application of the other car with cab will take control of the train.

The Cab Terminals to be installed in the driving station desks of the cars with cab will have the following interface with the MVB bus:

- A class 4 interface with the MVB bus to communicate process variables and messages, as well as to perform the MVB Bus Administrator tasks.
- An Ethernet interface for connection to a PC to perform configuration and maintenance tasks.
- An RS485 interface to communicate with systems that can not be connected to the MVB bus.

The Centrals Units will have the following interface with the MVB bus:

- A class 1 interface with the MVB bus to communicate process variables.

The System includes the PC programmes for running, debugging and uploading the PLC programme, analysing and displaying recorded data, and converting the historical record file into a text format compatible with any commercial software such as Excel, or a database.

7.- FUNCTIONAL REQUIREMENTS OF THE SYSTEM

The functional requirements of the system are:

F.1. It will capture the state of a number of direct discrete inputs in each car. These inputs will come from the state of contacts fed at +BV, contacts fed at 0BV or contacts fed at 24Vdc. The corresponding debounce filtering will be applied to these discrete inputs.

For each discrete signal captured there will be a mask that allows the signal's standby state to be adjusted so that its activation is always presented by a logical 1 in memory.

The system will capture the following number of discrete inputs in each car per train unit:

CAR A	CAR B	CAR C	CAR D	CAR E	CAR F	CAR G
72	0	0	0	0	0	72

F.2. It will control the state of a number of direct relay outputs in each car by means of the corresponding PLC programme.

For each relay output there will be masks that allow the standby state of the relays to be defined.

The system will control the following number of discrete outputs in each car per train unit:

CAR A	CAR B	CAR C	CAR D	CAR E	CAR F	CAR G
48	0	0	0	0	0	48

F.3. It will capture the state of 4 analogue inputs in A and G cars.

F.4. The System will allow two emergency states to be defined for the relay outputs.

The System will switch to emergency state when the information in the MVB bus is not refreshed within a certain period of time. The emergency state -one or two- will be selected according to a special digital input, and the state of each output can be defined for each emergency state.

F.5. It will have the capacity to communicate data via serial line with other systems through the train network's MVB bus and/or through the RS485 buses. The data will be: discrete variables, analogue variables, driving parameters, configuration parameters, etc.

F.6. The System will permit the running, simulation and debugging of the train unit control PLC programmes. Running will be facilitated through a standard interface (ISaGRAF), simulation will be performed in a PC environment, and debugging will be in real time in direct connection with the systems installed in the trains and acting on them through the debugging tools (forcing of PLC variables).

F.7. The System will have the means for being able to upload the PLC programmes in the memory of the Terminals of each end car.

F.8. As there are two Terminals with PLC programme per train unit, the system will manage the redundancy of the system, in such a way that if one of them fails the other one takes control.

F.9. The SICAS System will provide the capacity to enable the PLC programme to evaluate the conditions of up to 5.000 events or incidents per train unit.

F.10. The SICAS System will show the abovementioned 5.000 events or incidents to the driver and/or maintenance staff through the Cab Terminal. Each fault can be identified with a text and associated with a graphic icon. The total number of incidents that can be represented in the terminal will be 5.000 per train unit.

F.11. Texts containing recommendations to be followed by the operator can be provided for each one of the events or incidents.

F.12. Each one of the abovementioned 5.000 events or incidents per train unit will be recorded together with the corresponding date and time, and a series of variables such as: environment variables, analogue variables, discrete input/output variables, parameters, etc., to be determined during the project.

It will be possible to fix the number of photos of the state of the variables that form part of the environment to be captured before and after the moment when the fault appears, with a maximum of 10 snapshots before and 10 after. The control and monitoring system will have 128 MB of Flash memory for recording variables and events.

F.13. The System will provide the necessary means for extracting data from the abovementioned historical record of events through an Ethernet interface.

F.14. The System will provide the necessary means for analysing and displaying the recorded data on a computer screen, making it possible to:

- See the car's serial number and the type of train to which the data under analysis belong.
- Show the information about the analogue and discrete signals belonging to an event's environment variables.
- Present the environment variables according to the date and time.
- Show the values of the analogue variables and the state of the discrete variables at a selected instant associated with an event.
- Show the value of the recorded parameters (Train Number, Driver Number, etc.) at the top of the PC screen at the instant selected with a cursor.
- Convert the recorded data on screen into a format that a commercial database can work with.

F.15. The Central Units will have appropriate man/system interface for showing the system's functioning/fault state (link with the MVB bus).

F.16. By using the man/machine interface obtained by connecting a computer to the Terminal's Ethernet port, it will be possible to:

- Configure the Serial Number and the type of train in which the Central Unit is installed.
- Change the date and time of the internal clock.
- Initialize and delete the historical record of events.
- Change the access code.

F.17. By using the Configuration and Maintenance Terminal TCM (laptop computer), the System will be able to:

- Show the versions of programmes running in the TCM.
- Insert the value of the parameters to be configured in the Terminal.
- Show the state of the captured discrete variables.
- Show the state of the output relays.
- Show the existing faults in the train.
- Show the train's running data: Train Number, Driver Number.
- Show the train event record.
- Upload the PLC control programmes.
- Extract the recorded data from the historical record.

F.18. By using the Cab Terminal it will be possible to:

- Display the versions of the programmes running in the Cab Terminal.
- Display and change the data and time of the system.
- Display the state of the captured discrete variables.
- Display the state of the output relays.
- Display the existing faults in the train.
- Display the data of the train's auxiliary systems connected to the MVB train bus. The time period in which these signals are refreshed will depend on the capacity of the bus.
- Display and select the train's running data: Train Number, Driver Number, Line on which it is running, Destination, etc.
- Adjust and communicate to the brake, traction and CESIS systems, etc. the wheel diameter of each one of the bogies that support the train.
- Change the date and time of the internal clock.

F.19. The most important man/machine interface of the SICAS System is the Cab Terminal.

F.20. The Cab Terminal will incorporate supervision of the execution of its processes (watchdog).

F.21. The Cab Terminal will be supported by a TFT screen and a functional keyboard.

F.22. The screens shown on the Cab Terminal will have a graphic format based on windows and menus.

F.23. All the system configuration operations will be protected with an access code, which will be adjustable.

F.24. The System will have the necessary means for preventing permanent blocking due to programme failure (watchdog).

F.25. The System will show, in the interface with the operator, its operating state and internal faults detected in its auto-check.

8.- TECHNICAL REQUIREMENTS OF THE SYSTEM

The technical requirements of the system are:

T.1. The systems will operate at battery voltage BV Vdc +25% -30%.

T.2. The working temperature for the system's control units will be T3 according to EN50155, and the storage temperature will be -25ºC < t < 85ºC.

T.3. The working temperature for the system's Cab Terminal will be -25ºC < t < 70ºC and -10ºC < t < 55ºC for its display, and the storage temperature will be -25ºC < t< 85ºC.

T.4. The degree of protection provided by the enclosure of the systems installed in cupboard (Centrals) will be IP20.

T.5. The degree of protection provided by the enclosure of the systems installed on the desks of the driver's cabs will be IP20. The front of the Cab Terminal will have degree of protection IP64.

T.6. The systems will withstand vibrations according to IEC 61373, Category 1 Class B.

T.7. The systems will withstand impacts according to IEC 61373, Category 1 Class B**.**

T.8. The dielectric rigidity of the systems will withstand 1000Vef 50Hz for 1 minute applied between the chassis and the connector terminals according to EN 50155.

T.9. The level of insulation between the chassis and the connector terminals will be greater than 20MΩ at 500Vdc according to EN 50155.

T.10. All the systems will meet the EMC requirements and the electric service conditions specified in section 3 of EN 50155 and in accordance with the tests referred to in section 10 of this standard.

T.11. The Control and Monitoring System will have a non-volatile memory with capacity to store 128 Mbytes of data in the terminals that run the PLC process for recording variables and for the historical record of events.

T.12. The recording memory will store the recorded information without switching on the power supply.

T.13. The screens and indicators to be used in the interface with the operator will incorporate the appropriate technology for providing the best display conditions. The control of these screens and that of the lighting system will have the necessary means for adjusting the light intensity according to the existing natural light, both manually and automatically.

These facilities must be accompanied by suitable installation conditions that prevent the screens from being exposed to excessive lighting.

T.14. The contacts of the output relays will have a current cut-off capacity of 0.4A at 110Vdc L/R<30ms. They will have an RC circuit for reducing excess currents.

T.15. For the direct relay output cards it will be possible to select for each output the standby state of the contact (NC or NA) and the relay states (excited or not excited) for each one of the two emergency states.

T.16. The direct discrete inputs will be able to detect contacts fed at battery voltage with a drain of 1mA and contacts fed at 24Vdc with a drain of 10mA. They will have a "contact cleaning" circuit.

T.17. The construction materials of the constituent parts of the system must meet the requirements of the NF N 16101 and NF F 16102 standards, grade A1 as regards fire resistance and emission of smoke (trains for service in tunnel).

T.18. The functional keyboard of the Cab Terminal will consist of a 10.4" screen, with touchscreen.

T.19. All the inputs and outputs of the SICAS system will be protected against short-circuits, excess currents, polarity inversions, overheating and EMC disturbances.

9.- SYSTEM SUPPLY LIST

If the scope of supply of this technical specification differs from that of the economic bid, that of the economic bid will prevail.

COPYING OF THIS DOCUMENT AND/OR USE OF THE CONTENTS ARE FORBIDDEN WITHOUT PERMISSION FROM SISTEMAS ELECTRONICOS DE POTENCIA S.A. ALL RIGHTS ARE RESERVED IN THE EVENT OF PATENT GRANTING OR REGISTRATION.

PROPIEDAD DE SISTEMAS ELECTRONICOS DE POTENCIA S.A. ESTE PLANO NO PODRA SER REPRODUCIDO TOTAL NI PARCIALMENTE, NI ENTREGADO A TERCEROS, SIN LA EXPRESA AUTORIZACION.

USB00000086_0699

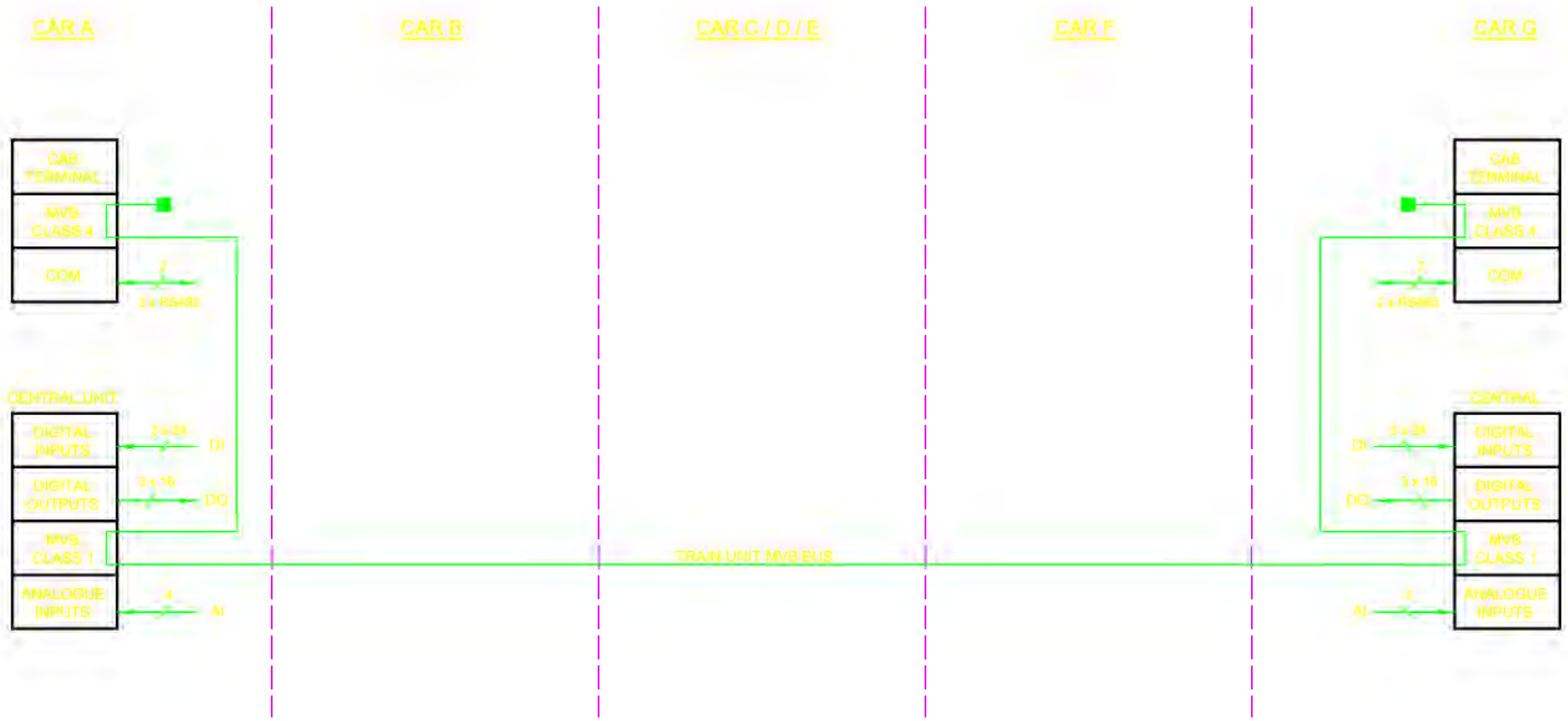

A	Created drawing.	06-10-02	M.V.R.	M.B.A.	M.B.A.
EDIC. ISSUE	MODIFICACION MODIFICATION	FECHA DATE	DIBUJADO DRAWN	COMPROBADO CHECKED	APROBADO APPROVED

TECHNICAL SPECIFICATION E-T1970

DENOMINACION DESCRIPTION: SICAS – EDINBURGH GENERAL DIAGRAM

SISTEMAS ELECTRONICOS DE POTENCIA, S.A.

MATERIAL MATERIAL	ESCALA SCALE	PESO WEIGHT	DIMENSIONES EN mm DIMENSIONS IN mm	Nº PLANO DRAWING NR.	HOJA SHEET	EDICION ISSUE
				S046779-E	1/1	A

DIN-A3

ISO 2768-c	TOLERANCIA DIMENSION LONGITUDINAL (mm)								TOLERANCIA DIMENSION ANGULAR				
	0,5–3	3–6	6–30	30–120	120–400	400–1000	1000–2000	2000–4000	0–10	10–50	50–120	120–400	>400
	±0,2	±0,3	±0,5	±0,8	±1,2	±2	±3	±4	±1°30'	±1°	±0°30'	±0°15'	±0°5'

USB00000086_0700

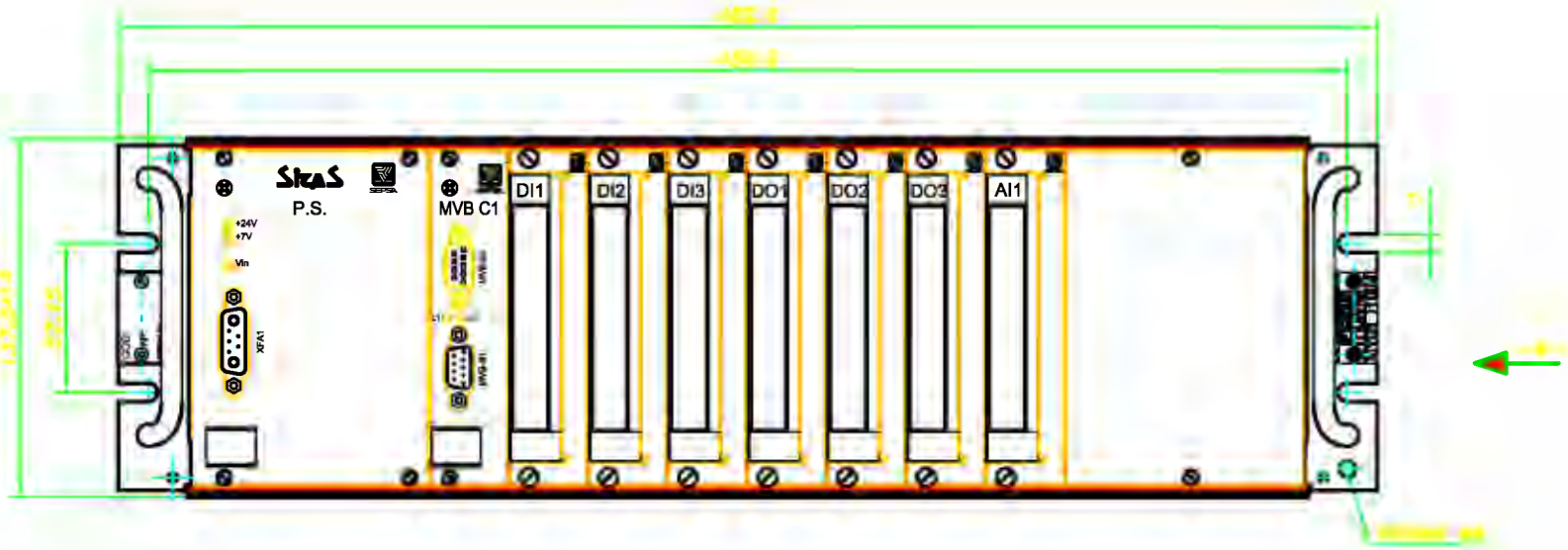

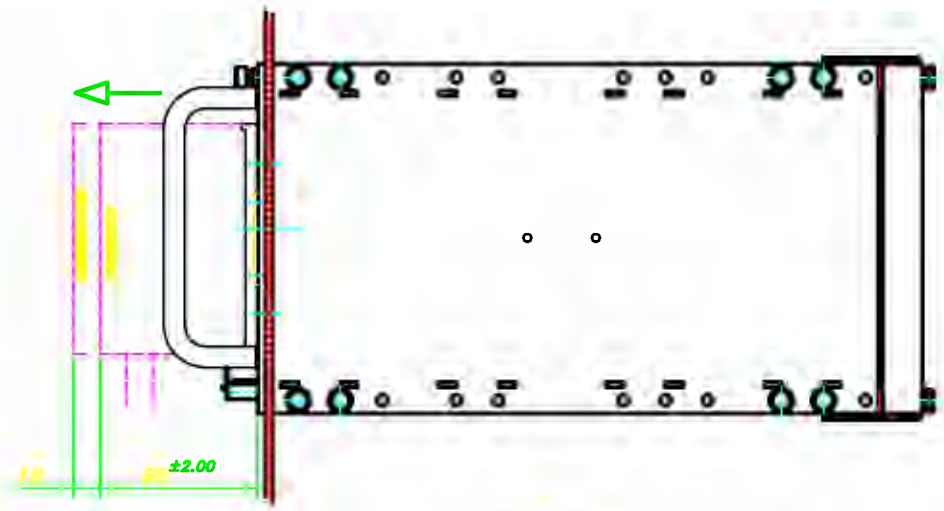

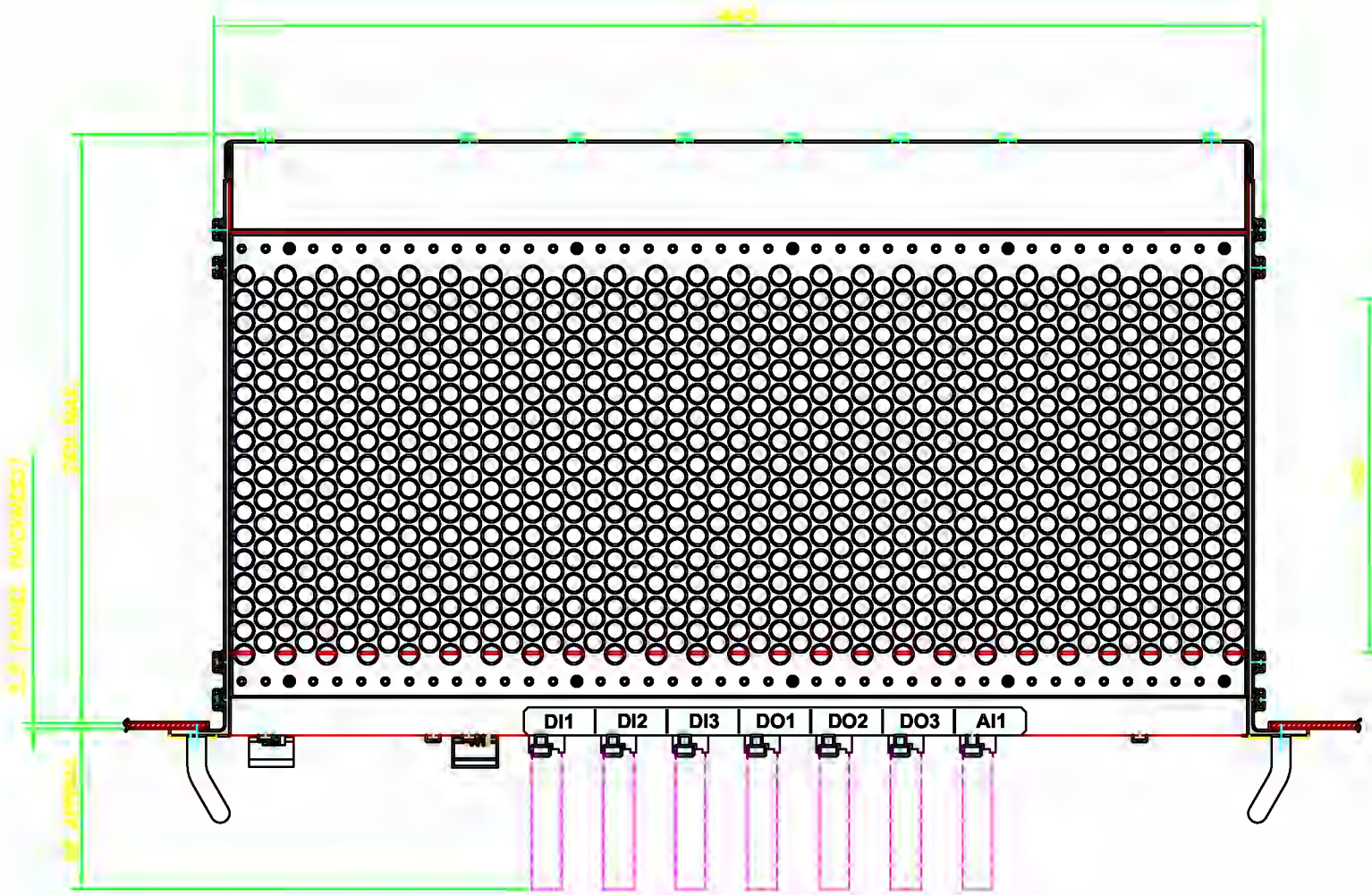

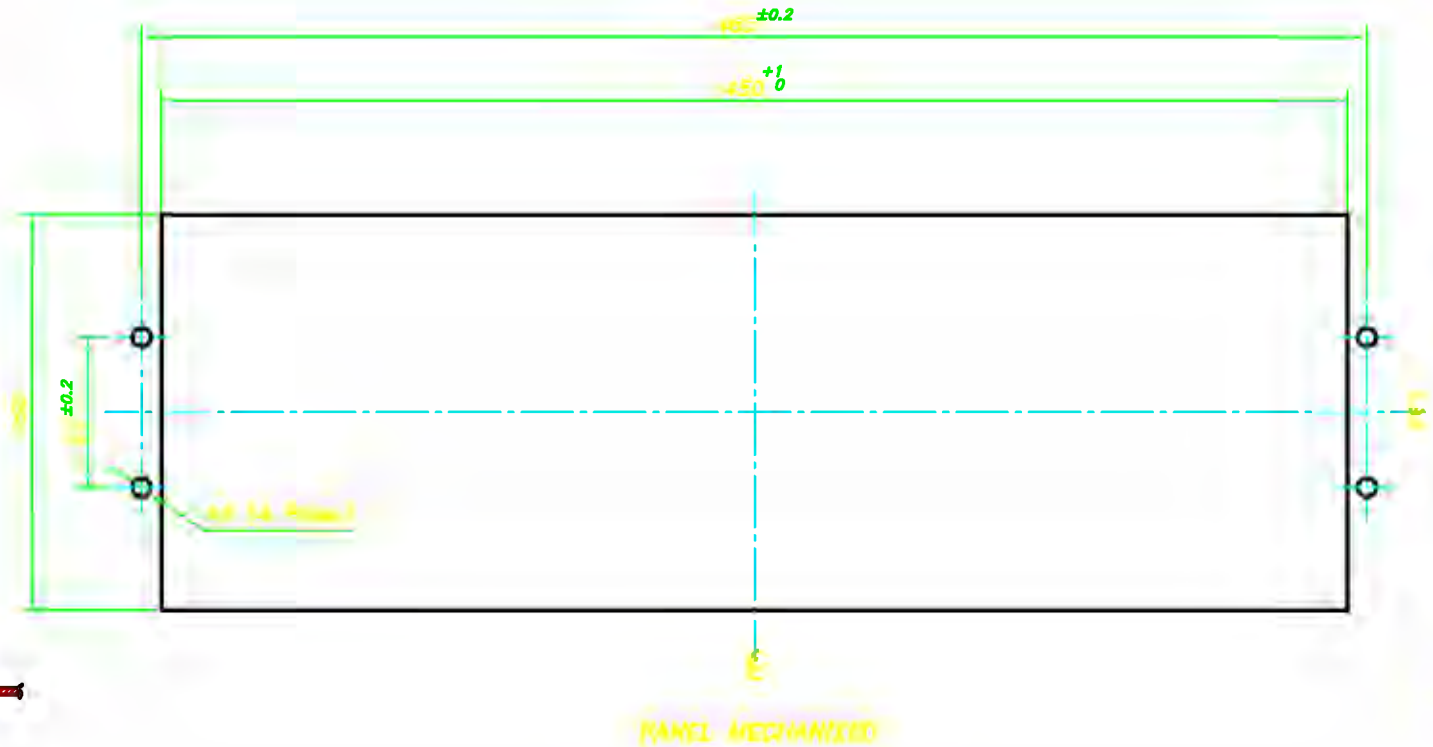

A	Created drawing.	06-10-02	M.V.R.	M.B.A.	M.B.A.
EDIC. ISSUE	MODIFICACION MODIFICATION	FECHA DATE	DIBUJADO DRAWN	REVISADO CHECK	APROBADO APPROVED

TECHNICAL SPECIFICATION E-T1970.

DENOMINACION DESCRIPTION: SICAS – EDINBURGH CENTRAL UNIT

SISTEMAS ELECTRONICOS DE POTENCIA, S.A.

MATERIAL MATERIAL	ESCALA SCALE	PESO WEIGHT	DIMENSIONES EN mm DIMENSIONS IN mm	Nº PLANO DRAWING NR.	HOJA SHEET	EDICION ISSUE
	1:2			5048780–	1/1	A

ISO 2768-c	TOLERANCIA DIMENSION LONGITUDINAL (mm)								TOLERANCIA DIMENSION ANGULAR				
	0,5–3	3–6	6–30	30–120	120–400	400–1000	1000–2000	2000–4000	0–10	10–50	50–120	120–400	>400
	±0,2	±0,3	±0,5	±0,8	±1,2	±2	±3	±4	±1°30'	±1°	±0°30'	±0°15'	±0°

USB00000086_0701

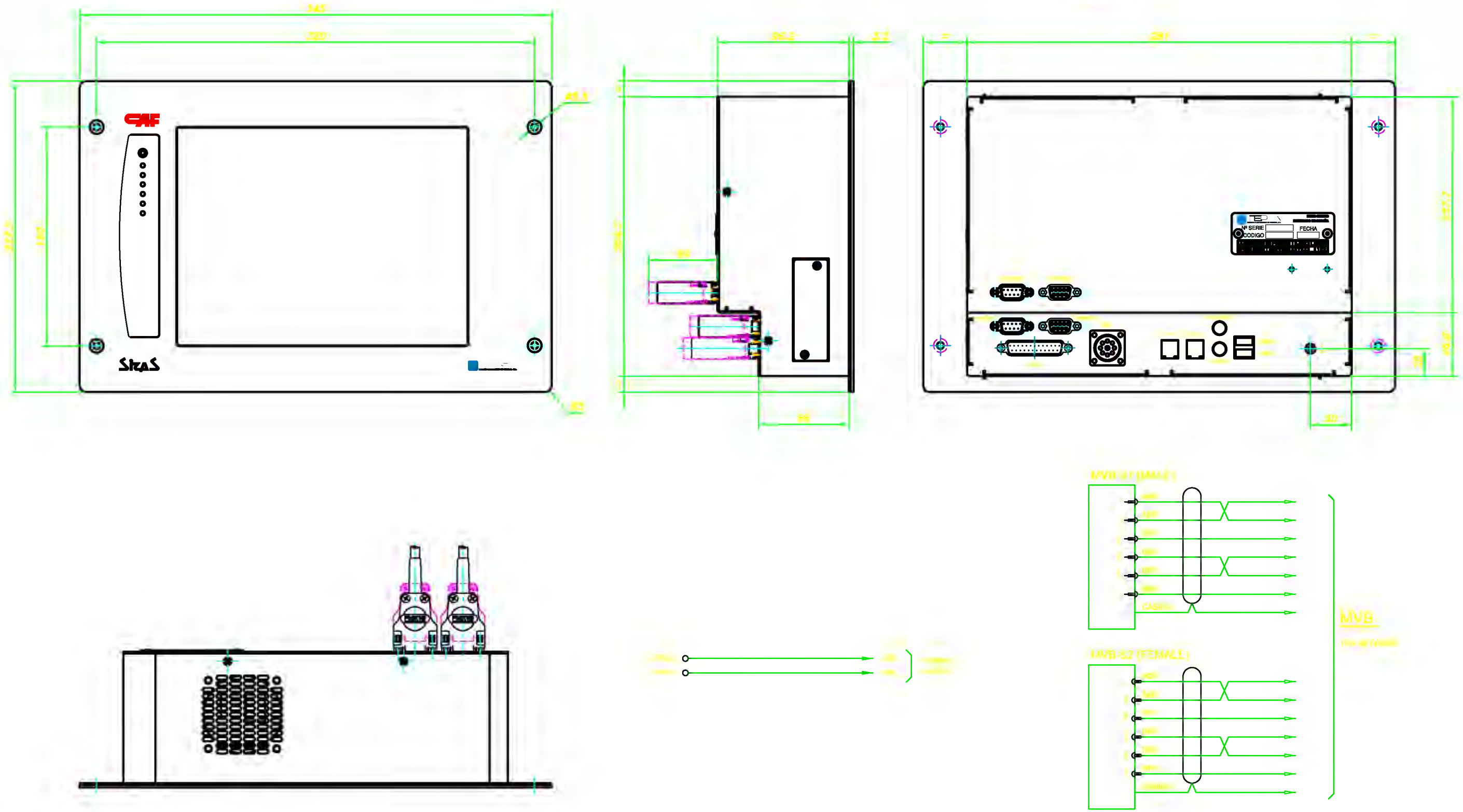

A	Created drawing.	06-10-02	M.V.R.	M.B.A.	M.B.A.
EDIC. ISSUE	MODIFICACION MODIFICATION	FECHA DATE	DIBUJADO DRAWN	REVISADO CHECK	APROBADO APPROVED

TECHNICAL SPECIFICATION E-T1970.

DENOMINACION DESCRIPTION: SICAS – EDINBURGH CAB TERMINAL -CT-

SISTEMAS ELECTRONICOS DE POTENCIA, S.A.

MATERIAL MATERIAL	ESCALA SCALE	PESO WEIGHT	DIMENSIONES EN mm DIMENSIONS IN mm	Nº PLANO DRAWING NR.	HOJA SHEET	EDICION ISSUE
	1:2	±5% 12,1 Lb.		5046825-E	1/1	A

DIN-A2

COSMOS

TECNICAL DESCRIPTION OF THE COSMOS SYSTEM FOR TRAM EDINBURGH

Code: CS.TRAM EDINBURGH.DT
Edition:00
Edition Date: 25.07.2007

© TRAINTIC, S.L. 2007
This document contains confidential information property of CAF, S.A. and TRAINTIC S.L., therefore cannot be used for any other purpose, other than those previously agree. The reproduction, distribution, transmission or used of this document or any of its contents by third parties is not permitted without written permission from CAF, S.A. and TRAINTIC S.L.

USB00000086_0702

1 REVISIONS REGISTRATION 3
2 DEFINTIONS AND ABBREVIATIONS 4
3 REFERENCES 4
4 INTRODUCTION 5
5 SYSTEM TOPOLOGY AND FUNCTION 6
6 TECHNICAL DESCRIPTION OF THE EQUIPMENT 9
6.1 COSMOS-IU.04 9
6.2 COSMOS-CU.04 10
6.3 COSMOS-IO.02 11
6.4 COSMOS-RP.02 12
6.5 COSMOS-GW.02 13
7 REDUNDANCY 14

1 REVISIONS REGISTRATION

Edition	Comments	Edition Date
00	Draft Version	25.07.2007

Prepared by:	Reviewed by:
Nerea Arrillaga	
Date: 25.07.2007	Date:

2 DEFINTIONS AND ABBREVIATIONS

COSMOS	Control and Supervision System of the Train
MVB	Multifunction Vehicle Bus
RENFE	Spanish Railway Network
TCN	Train Communication Network
WTB	Wired Train Bus

3 REFERENCES

[Ref. 1] IEC61375-1: Train Communication Network.

4 INTRODUCTION

Cosmos is a modular system for control and supervision of the train based on the train communication network standard [Ref. 1]. All of its modules have been designed and manufactured to work within railway rolling material, complying with the present railway standard.

The system has three fundamental functions:

1. Management of the communication between the elements (modules) of a unit and in between units. The System gives access to a TCN communication channel and manages all the transmission data at the bus level for both the Vehicle Bus (MVB) and the Train Bus (WTB).
2. Interface with the train through the input/output channels and implementation of the train logic. The COSMOS System contains IO modules with digital and analogical Input/Ouput connections and RS485/422 serial communication access. These modules are distributed throughout the train to capture its status and behave in agreement with the programmed automatism logic or control units.
3. Supervision, monitoring and registration of the train behaviour. From the drivers terminal, not only it can be used to insert driving parameters and to configure the train, but also it can be used to see the status of the different elements of the train. The different errors and faults that could occurred during the function of the system will be registered and recorded, for the drivers or maintenance employees further supervision and required action.

The modularity and flexibility of the system allows to cover the different requirements of each specific application by changing the modules configuration, each of which are form by a small number of basic elements. The purpose of this document is to described the technical aspects of the COSMOS System for Tram Edinburgh.

5 SYSTEM TOPOLOGY AND FUNCTION

The network topology of the control and supervision system of Electric multiple unit N Zelanda units is shown in Figure 5.1. It shows a train unit of two cars, which can be attached to a second unit two form standard unit of Electric multiple unit N Zelanda.
The Cosmos System is composed of the following modules:

1. **MVB Bus Administrator Module: CCU/BA**

   In each unit there is the need to manage the data exchange between all the modules connected to the bus. This is the function assume by the bus administrator modules BA1 and BA2, as specified in Chapter 3 from [Ref. 1]. The two administrators are completely independent, that is, once the configuration tables are loaded they execute periodically the commands to send data through MVB. The configuration tables from the BA modules contain the parameters from all the data transmitted through MVB, whether this transmission is between modules from the Cosmos System or between other equipment also with attached to the bus. The configuration of the Bus Administrator module must be in coherence with the configuration of all of the modules and equipment connected to the bus. The bus administrator (BA) equipment is integrated with the Control unit (CCU).

2. **Train Control Module: CCU/BA**

   The CCU modules are in charge of executing the logic of the global functioning of the train, of managing the redundancies in the system, and what signals must be used in each moment. In each unit, the active CCU (one of the two available) will detect the drivers position (whether he is in the same unit or another one coupled) and filter the commands, for the purpose of sending to the other modules only those commands coming from the active cabine, and not from any other cabine. The CCU operating system allows the execution of the applications in real time. The applications can be programmed to be executed cyclically. In each case or particular application the number of cyclic tasks and its periods will be different.

   In every moment, there will be only one active CCU, while the other is in passive state, waiting to be ask to intervene.

3. Cabine Display: HMI

The cabins display delivers the human machine interface (HMI) of the system. It is the interface point with the driver, the maintenance personal and the staff in charge for the commissioning of the system. It permits to graphically visualize the different train states, as well as notifying the alarms that may occur. An equipment will be present in the two extreme cars of the unit.

In N Zelanda's train, the HMI equipment will also include the diagnosis and monitoring functionalities for the maintenance of the history log for events and alarms.

4. Input/Output Modules

These modules contain different number of digital and analogical channels for inputs and outputs, and a RS485/422 communication channel per module.

Figure 5.1 describes the bus topology used for each UT at the bus level (MVB), for both basic and redundant configuration.

The COSMOS modules configuration for each EMU unit is fixed, and identical for all the units.

5. Gateway Module: GW

This module manages the communication at the train bus level. When the system is power up the different gateways of the system communicate between each other to determine the present train configuration. This process is called "Train's Inauguration". Once this process is finished, one of the gateways becomes the master and takes control and manages the communication in the WTB as determine by the gateways configuration.

For this project, there are two gateway (GW) included in each unit for redundancy.

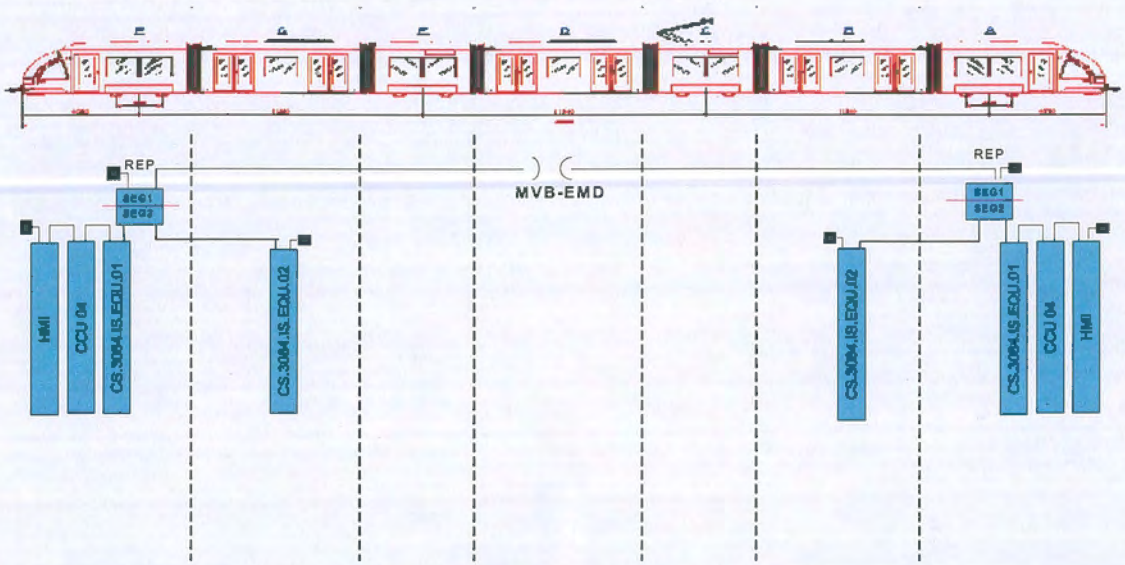

Cars A & F:
1 módulos CS.3084.IS.EQU.01 con: 4 DI, 6 DO, 1 AI, 2 RS485

Cars B & G:
1 módulo CS.3084.IS.EQU.02 con: 2 DI, 2 DO, 1 RS485

TRAM EDINBURGH

traintic

25/07/07

Figure 5.1: COSMOS System of a two car unit configuration.

6 TECHNICAL DESCRIPTION OF THE EQUIPMENT

6.1 *COSMOS-IU.04*

- Main Technical Characteristics:

- Screen 10,4 " TFT-Color, VGA 640X480 resolution.
- Integrated keyboard supported
- 256 Mbyte RAM
- 128 Mbyte Flash
- 4 Mbyte graphic memory
- Equipment Design complying with EN50155
- Connection to the MVB in compliance with IEC61375-1
- Working Temperature: -25 a 75 ºC
- Power Consumption: < 30 W
- IP 67 (front)

- Approx. Mechanical Characteristics:

Height x Width x Depth: 227mm x 345mm x 118mm

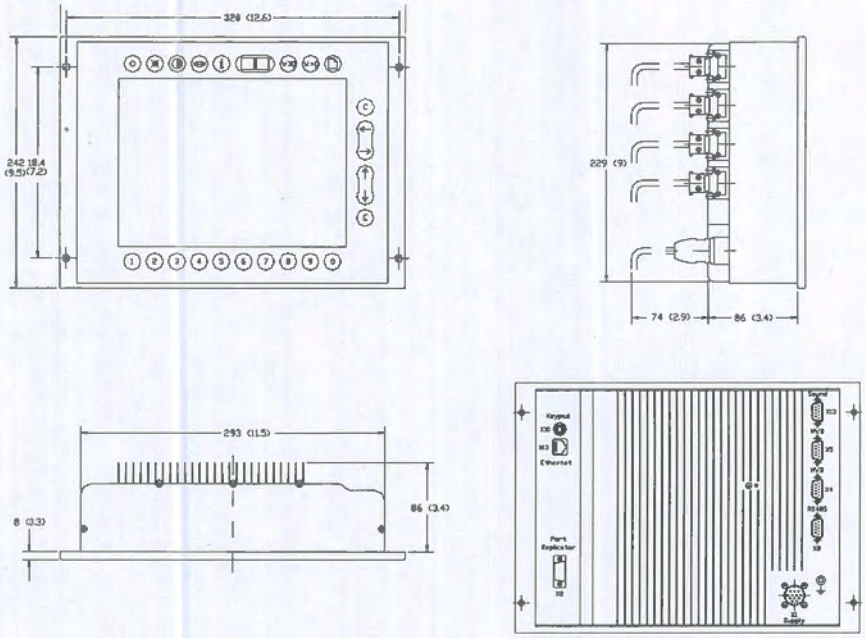

- Interfaces: MVB, RS485, USB, Ethernet, Sound output

USB00000086_0710

6.2 COSMOS-CU.04

- Main Technical Characteristics:

- 2 Mbyte RAM
- 2 Mbyte Flash
- Composed of one configuration interface and two MVB connectors.
- Provided with LEDs to detect failures and maintenance helping
- Equipment Design complying with IEC 31375 and EN50155
- Working Temperature: -25 to 85 ºC
- Supply voltage : 24-110 VDC
- Power Consumption: < 3 W

- Mechanical Characteristics:

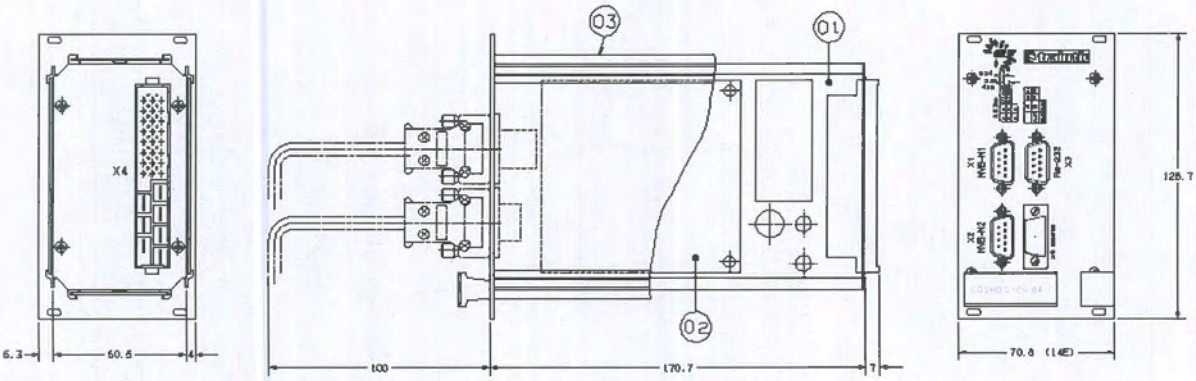

DIMENSIONS:

APROX. WEIGHT: 1 Kg.

6.3 COSMOS-IO.02

- Main Technical Characteristics:

- IO Module with flexible configuration: cards for digital or analogical inputs/outputs.
- 1 RS485 connection per module COSMOS-IO
- Equipment designed in compliance with IEC 61375-1 and EN50155
- Class 2 module
- Working Temperature: -25 a 85 ºC
- Protected against over current, inverse polarity, over voltage, ...
- Automatic self-test of each input/output channel
- Possibility to access status of the device from all points connected to the MVB bus
- Digital outputs use MOSFET (longer life and better reliability than mechanical relays)

- Mechanical Characteristics:

DIMENSIONS:

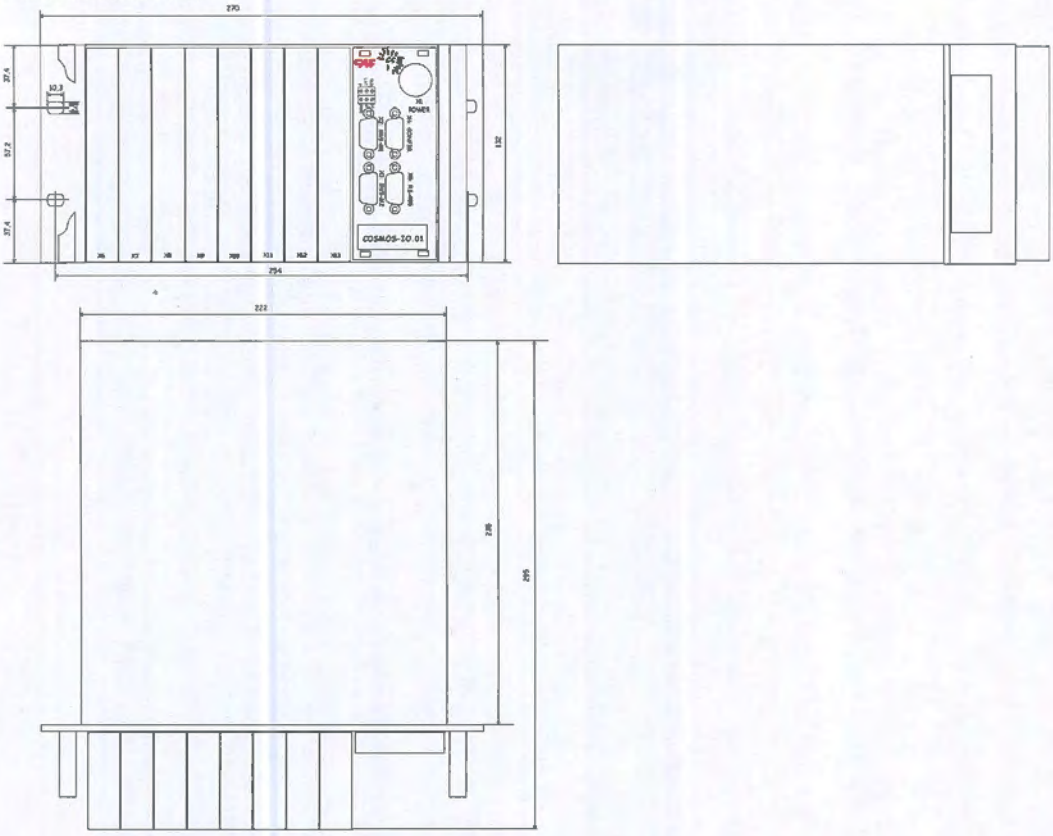

APROX. WEIGHT:5 Kg.

USB00000086_0712

6.4 COSMOS-RP.02

- Main Technical Characteristics:

- 2 Channel repeater (A and B) completely independent
- Provided with two MVB connectors per channel.
- Equipment designed in compliance with IEC 61375-1 and EN50155
- Working Temperature: -25 a 85 ºC
- Supply Voltage: 24-110 VDC
- Power Consumption: 10W Max.

- Mechanical Characteristics:

DIMENSIONS:

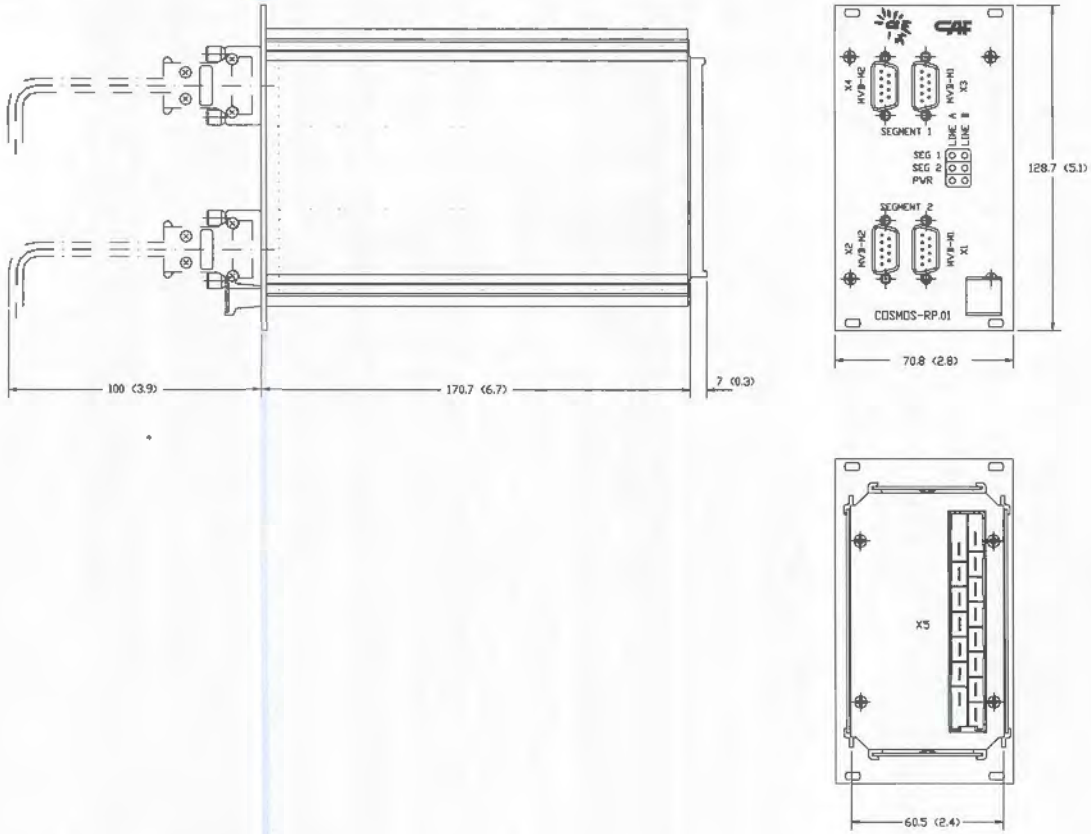

APROX. WEIGHT: 1 Kg.

USB00000086_0713

6.5 COSMOS-GW.02

- Main technical characteristics:

- It's provided with a configuration interface.
- It has 2 WTB connectors and 1 MVB connector per segment.
- Provided with LEDs to detect failures and maintenance helping
- Equipment Design in compliance with IEC 61375-1,UIC 556 and EN50155
- Working Temperature: -25 a 85 ºC
- Supply Voltage:24- 110 VDC
- Power Consumption: 20 W Máx.

- Mechanical Characteristics:

DIMENSIONS:

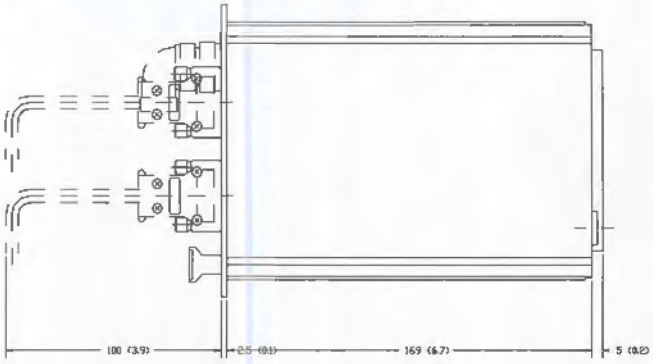

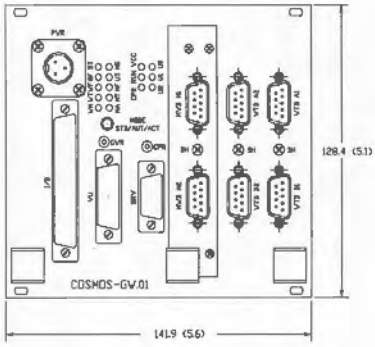

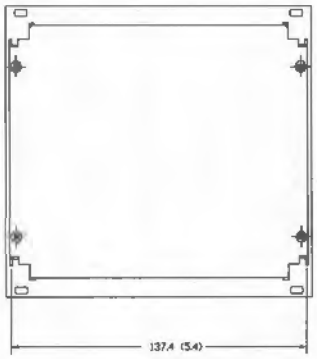

APROX. WEIGHT: 2 Kg.

USB00000086_0714

7 REDUNDANCY

The COSMOS system posses different levels of redundancy as define by the TCN normative [ref.1].

1) Line Redundancy (MVB bus).
2) Device Redundancy. The following redundant devices are independently power:
    a. Control Unit Function Module (CCU): a strategy is implemented so that both redundant modules, in a specific moment in time, can agree upon who will take the role to execute the active and passive task. Therefore, the active role will execute those tasks related to the train's control logic, while the CCU with the passive role stays on hold.
    b. Bus Administrator Function Module (BA): In each specific moment in time, one of the bus administrators will govern the communication in the MVB bus. Periodically, or in case of failure of the active administrator, the other will take the active role.
    c. Input/Output Function Module (IO): Each of the input and output channels can be made redundant. When the modules are configured, the redundant strategy to be followed must be decided for each input/output and it is treated automatically by software in accordance with certain criteria.
3) Data Redundancy: Different strategies can be followed by the equipment accessing to the data, in order to make decisions that allow differentiating among the redundant data transmitted through the bus, and take the most appropriate one at each moment in time.

USB00000086_0715

TECHNICAL SPECIFICATION OF THE EVENT RECORDER, DRIVER'S SAFETY DEVICE AND SPEEDOMETER

Prepared by:
Name: Sergio Gascón
Date: 13/03/08

INDICE

1. OBJECT 3

2. GENERAL TECHNICAL DESCRIPTION OF THE SYSTEM 3

3. EVENT RECORDER CENTRAL 3
   Driver's Safety Device 4
   Removable Recorder Module (MRE) 5

4. SPEEDOMETER AND ODOMETER 5

5. STANDARDS 5

1. OBJECT

[1.1] This Technical Specification defines the functional and technical requirements of the Event Recorder, Driver's Safety Device and Speedometer for Edinburgh Tram.

2. GENERAL TECHNICAL DESCRIPTION OF THE SYSTEM

[2.1] The System is made up of the following equipment:

a) One Event Recorder Central per tram, including Driver's Safety Device.
b) Two Speedometer per tram (one at each cab).
c) One odometer calibrated in km.
d) Software to download, display and analyzed the registered data.

3. EVENT RECORDER CENTRAL

[3.1] One cab of the Tram will be equipped with a Event Recorder Central.

[3.2] The Recorder Unit is the main element in the System and is responsible to managing and controlling the rest of the System's equipment, carrying out tasks of recording.

[3.3] The most important functions of the System are:

- Measurement of the speed and the distance covered by the train.
- Direct capture of the discrete and analogue variables through physical inputs.
- Capture of discrete and analogue variables through serial data MVB communications.
- Supervision of speed levels and activation of the corresponding relay outputs.
- Chronological register of events, speeds, distance, and time.
- Analysis and display of the recorded events.
- Configuration of functional parameters.
- Speedometer and Odometer control
- Self-check of operation.
- Real-time clock for the rest of the equipment.

[3.4] The System will register the following Tram configuration parameters:

- Tram number
- Line
- Driver identification
- Wheel diameter

[3.5] The System will register the following operation dates:

- Driver's Safety Device signals.
- Event Recorder failure.

- Driver's Safety Device failure.
- Driver's Safety Device by-pass.
- Distance
- Speed
- Date and time.

[3.6] Additionally, the start and end of the following events will be recorded at least: horn, bell, traction, brake, hazard brake, safety brake, track brake, door enable left present, door enable right present, manual sand command present, tram ready to start, hazard lights, left indicator, right indicator and passenger help point.

[3.7] The distance covered will be calculated based on the number of pulses received from the tachometer generators and the previously-configured wheel diameter and pulses per turn parameters.

[3.8] The Event Recorder Central is capable of providing time, speed and distance information at 1.0 m resolution for the last day's operations, and at 10.0 m resolution for the last seven day's operations.

[3.9] The speed will be calculated based on the distance covered and a precise internal time base (internal clock) and will be sent via MVB.

[3.10] The System will monitor the integrity of the signals received from the tachometer generators and will take advantage of their redundancy to obtain increased availability in case of failure.

[3.11] The Event Recorder Central will have 5 relays to define different speed levels.

[3.12] The System also includes the PC programs that allow the analysis, screen display and printing of recorded data.

[3.13] The software also enable all of the data to be exported into Microsoft Excel for further analysis.

[3.14] The Recorder Unit will provide the physical means in order to connect the System to the MVB bus of the train.

[3.15] The System will be capable of exchanging data via serial connection with other systems through the MVB bus.

[3.16] The Event Recorder Unit will allow the register to be extracted which a Laptop.

[3.17] The data to be exchanged over the MVB ports may include: discrete variables, analogue variables, driving parameters, and configuration parameters.

Driver's Safety Device

[3.18] The Event Recorder Central contains a Driver's Safety Device.

[3.19] The purpose of the Driver's Safety Device is to supervise the actions that the driver carries out in the traction unit, ensuring ideal vehicle control and conditions. In cases in which the driver does not carry out the necessary actions on the System, the Driver's Safety Device system will activate an emergency braking process.

[3.20] The driver's attention is monitored by activating/deactivating the button placed at the master controller. In this way it is possible to control the tram if the driver dies or falls asleep.

[3.21] The function carried out by the Driver's Safety Device system is called "Double Effect". The driver's attention is determined by the failure to press, or over pressing the corresponding cab control. It may comply with the UIC-641.

[3.22] When the system does not receive inputs during the time periods indicated, it begins an automatic

action. This consists of the activation in order of system outputs to alert the driver of a possible reduction in the level of alertness, and if the driver does not respond, the emergency braking of the train unit is triggered.

[3.23] There is an input allowing for the device to be cancelled in case that a system failure. This cancellation input and the failure output are sent to the recording equipment to be recorded.

Removable Recorder Module (MRE)

[3.24] This System will be equipped with a 32 MB non-volatile crash-protected memory.

[3.25] The data will be retained and be retrievable at least until 48 hours, after the Tram has been shut down.

[3.26] The Register will have a ring structure, overwriting the oldest information when the maximum size is reached.

[3.27] The removable recorder module will have a security locking device, that is not released by a Tram system key.

[3.28] All removable recorder module will be interchangeable between trams.

[3.29] The lack of the removable memory will be indicated as a failure.

4. SPEEDOMETER AND ODOMETER

[4.1] Each cab will be equipped with a Speedometer.

[4.2] The Speedometer acts as the System's main man-machine interface.

[4.3] The speedometer will have two different scales, calibrated in km/h and mph.

[4.4] The speedometer will have a indicator to signal a 90% occupancy of the memory.

[4.5] The speed and distance measurements will have a precision better than 1 % and a resolution of 1 m.

[4.6] The will be and odometer with 1 m resolution and with the displaying capacity up to 9.999.999 km by means of 7 digit display (1 km resolution).

5. STANDARDS

[5.1] The System will comply with the following standards:

EN 50121	Railway applications – Electromagnetic compatibility. Sep. 2000.
EN 50126	Railway applications – The specification and demostration of Reliability, Maintainability, and Safety.
EN 50128	Railway applications. Communications, signalling and processing system. Software for railway control protection systems.
EN 50129	Railway applications. Communications, signalling and processing systems. Safety related electronic systems for signalling.
EN 50155	Railway applications – Electric Equipment used on Rolling Stock
IEC 61373	Railway applications – Rolling Stock Equipment – Shock and Vibration Tests.

Director/Authorised Signatory
tie Limited

Director/Authorised Signatory
CONSTRUCCIONES Y AUXILIAR DE FERROCARRILES S.A

TECHNICAL SPECIFICATION OF CCTV

Prepared by:
Name: Olga Sisamón
Date: 13/03/08

INDICE

1. OBJECT 3
2. GENERAL DESCRIPTION 3
3. GENERAL DESCRIPTION OF THE REAR VIEW SYSTEM 3
4. FUNCTIONAL CHARACTERISTICS OF THE REAR VIEW SYSTEM 4
5. GENERAL DESCRIPTION OF THE VIDEO SURVEILLANCE SYSTEM 4
6. FUNCTIONAL CHARACTERISTICS OF THE VIDEO SURVEILLANCE SYSTEM 5

1. OBJECT

[1.1] This Technical Specification defines the functional and technical requirements of the CCTV for Edinburgh Tram.

2. GENERAL DESCRIPTION

[2.1] The **technical purposes** of the system shall be:

- Cab display of the images captured by the rear view cameras located on both sides of the driver cabs (Rear View System).
- To record the images captured by the interior and front cameras of each driver cab (Video Surveillance System).

[2.2] The system shall at least consist of the following items:

- One (1) Recording/Control Central Unit per Tram.
- Eight (8) Interior Cameras.
- Two (2) Front Cameras.
- Four (4) Rear View Cameras.
- Four (4) Cab Terminals.

3. GENERAL DESCRIPTION OF THE REAR VIEW SYSTEM

[3.1] The Rear View System of the Tram shall be based on a closed circuit television.

[3.2] The four (4) rear view cameras shall be installed on each side of both cabs, and these shall capture the images of the Tram sides and surroundings, serving as rear view mirrors.

[3.3] Two Terminals shall be fitted in each cab where the images captured by the rear view cameras shall be displayed, according to the operation mode selected at each moment.

[3.4] One Terminal shall be fitted on the right hand side of the driver desk and the other on the left hand side.

[3.5] The terminals screen shall be flat and large enough to provide for the correct operation of the Rear view system.

[3.6] The images displayed on the terminals shall be in colour.

[3.7] The terminal brightness shall be adjusted manually.

[3.8] The images displayed on the cab terminals must be visible to the driver, under all cab lighting conditions.

[3.9] The images must be clear enough to see a cyclist overtaking the tram, both in movement and at a standstill (at traffic lights, stops, etc...).

[3.10] The images shall be visible, regardless of the outside conditions (rain, dark, street lights, car lights in the rear view cameras, brught lights reflecting on damp or wet surfaces, etc...)

[3.11] The system shall cover the greatest angle of visibility possible.

[3.12] The system shall be prepared to deal with additional reflection generated on wet asphalted surfaces and the possible accumulation of rain water on the camera casings.

4. FUNCTIONAL CHARACTERISTICS OF THE REAR VIEW SYSTEM

[4.1] The rear view mirror shall have two operation modes:

- Normal.
- Stop.

[4.2] The Normal mode shall be automatically selected whenever the Train is in motion.

[4.3] In Normal mode, each cab terminal shall display the images captured by the rear view camera adjacent to the driver cab, as if looking through a rear view mirror. The right hand terminal shall display the images captured by the right camera and the left terminal those captured by the left camera. The images shall be laterally inverted for the “rear view mirror” effect.

[4.4] The Stop mode shall be automatically selected when the doors are enabled at the stop and until all the doors are closed.

[4.5] In Stop mode, the enabled side cab terminal shall display the same images as in Normal mode. The other terminal shall display the images of the rear view camera of the tail end cab enabled side (with no lateral inversion of the image). In this way, the driver can see the passengers boarding and alighting all the way along the Tram.

[4.6] The desk shall be fitted with an unlocked button to change from Stop to Normal mode when the button is activated. This shall allow the driver to ensure that nothing overtakes the Train whilst at the stop when the doors are closing.

5. GENERAL DESCRIPTION OF THE VIDEO SURVEILLANCE SYSTEM

[5.1] At least the eight (8) interior cameras shall be fitted inside the Tram so that there are images of the whole inside of the Tram, including the passenger assistance points, with adequate clarity and probative value for the identification of individuals.

[5.2] There shall be two (2) front cameras in the Tram cabs to provide images of the front/rear view from the cabs.

[5.3] The images captured by the front and interior cameras shall be recorded in the Control/Recording Unit.

[5.4] The Control/Recording Unit shall have a recording capacity to guarantee the images for at least the last 72 hours.

[5.5] The recorded images can be extracted from the Tram for analysis and conservation. For this reason, it is preferable that removable image storage hard drive be used.

[5.6] If the image storage hard drive is not on the Tram, this situation shall be clearly indicated to the driver and the maintenance personnel.

[5.7] The storage hard drive can only be removed using a security key, different to the Tram key system.

[5.8] All software (licences included) required to view, edit and analyse the images off the Tram, shall be included in the scope of supply of the system.

[5.9] All non-standard software (licences included) required to view, edit and analyse the images off the Tram, shall be included in the scope of supply of the system.

[5.10] As an option, the images relating to the Trams rear view system could be recorded.

6. FUNCTIONAL CHARACTERISTICS OF THE VIDEO SURVEILLANCE SYSTEM

[6.1] Each captured image shall at least be recorded with the following additional information:

- Time.
- Date.
- Camera number.
- Tram Number.

[6.2] Images shall be recorded in a loop. When the hard drive is full, the first images recorded shall be overwritten.

[6.3] The recording speed and resolution of the images captured by the interior and front cameras shall ensure that they can be used reliably as part of accident investigations.

[6.4] Regarding the images captured by saloon cameras, it shall be guaranteed that these can be used as proof for conviction should any illegal activity occur on the Tram.

[6.5] The minimum recording speed per camera shall be 16 fps.

[6.6] The front cameras allow the Tram to be reversed.

[6.7] The driver desk shall be equipped with a button that shall allow the driver to insert a quick search time line in the recorded images.

[6.8] The system shall be capable of processing digital alarm signals (passenger alarm, emergency handle, smoke detector, temperature sensor, selection by the driver, etc...).

[6.9] When a digital alarm signal is activated, the system shall display the camera images that best show the position of the activated alarm on a full screen on the enabled cab terminals.

[6.10] If a digital alarm signal is activated, the system can change the recording speed automatically.

[6.11] The alarm images shall be recorded permanently on an area of the image storage hard drive, until they are deleted on command.

[6.12] The images can also be extracted via data transfer, without having to remove the image storage hard drive.

[6.13] There shall be an interface between the Video Surveillance / Rear View System and the Entertainment Video system which shall permit the selected images of the Video Surveillance / Rear View System to be displayed on the Tram Interior screens.

WBR PANTOGRAPH
Maintenance Manual
Los Angeles Light Rail Vehicle

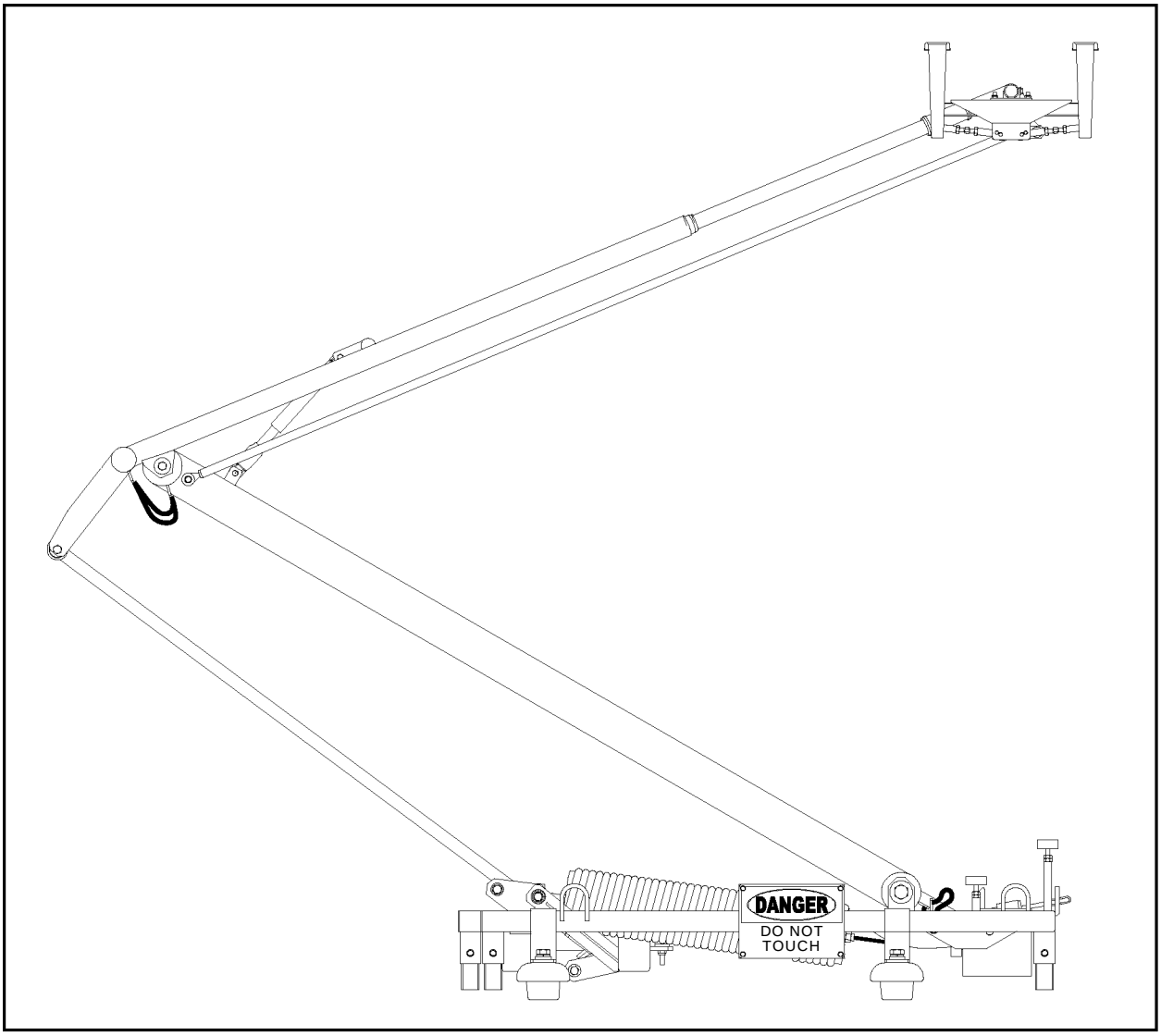

USB00000086_0726

SAFETY SUMMARY

WARNING: An operation or maintenance procedure, practice, condition, statement, etc., which if not strictly observed, could result in injury to or death of personnel.

CAUTION: An operation or maintenance procedure, practice, condition, statement, etc., which if not strictly observed, could result in damage to, or destruction of equipment, or loss of its effectiveness.

WARNING

Operating voltage and current in systems employing the pantograph are high enough to be lethal. Do not touch or even approach any part of the pantograph while the carbon strips are in contact with the overhead wire. Switch off the catenary before performing any maintenance on the pantograph.

Before working on a pantograph that is equipped with a safety system, always install the yellow safety pin. Leaning on the upper or lower frame or applying downward force in some other way could cause the shear pin to break. The pantograph would then collapse, injuring anyone who has a limb or other body part within the envelope of the pantograph.

To remove safety pin, reach under pantograph, keeping remainder of your body outside the envelope of the pantograph. The safety pin should be loose in hole. Do not force safety pin from hole. A tight safety pin could indicate that the shear pin is fractured, causing pantograph to collapse when safety pin is removed.

Attach an appropriate warning tag to the pantograph up/down switch in the cab if service work is to be performed on a pantograph. Unexpected lowering or raising of the pantograph while performing service work could cause serious injury.

CAUTION

Lift the pantograph only by the lifting lugs located on the base frame. Attempting to lift the pantograph at any other point could cause structural damage. Secure the latch down hook to the latch keeper on the upper frame with wire or rope to prevent accidental raising during lifting or moving.

The lowering cylinder must be extended before raising the pantograph. If the pantograph is allowed to be raised, without the air cylinder extended to restrict the speed, the spring force plus the raising inertia of the pantograph could cause damage or injury. To prevent this the air cylinder should be extended either by a "down" command from the vehicle controls or if air is not available by the manual reset lever

provided on the pantograph. When using the reset lever it should be pulled at a slow steady rate. Excessive force on the lever will not cause the air cylinder to extend faster and will only cause damage to the lever and it's linkage. By design the hydraulic system will only operate at a steady rate regardless of the force exerted.

USB00000086_0728

LIST OF EFFECTIVE PAGES

Insert latest changed pages and destroy superseded pages.

Page	Revision	Page	Revision	Page	Revision
i	New	27	New	61	New
ii	New	28	New	62	New
iii	New	29	New	63	New
iv	New	30	New	64	New
v	New	31	New	65	New
vi	New	32	New	66	New
vii	New	33	New		
viii	New	34	New		
1	New	35	New		
2	New	36	New		
3	New	37	New		
4	New	38	New		
5	New	39	New		
6	New	40	New		
7	New	41	New		
8	New	42	New		
9	New	43	New		
10	New	44	New		
11	New	45	New		
12	New	46	New		
13	New	47	New		
14	New	48	New		
15	New	49	New		
16	New	50	New		
17	New	51	New		
18	New	52	New		
19	New	53	New		
20	New	54	New		
21	New	55	New		
22	New	56	New		
23	New	57	New		
24	New	58	New		
25	New	59	New		
26	New	60	New		

This page intentionally left blank

TABLE OF CONTENTS

Title	Page
SAFETY SUMMARY	i
LIST OF EFFECTIVE PAGES	iii
TABLE OF CONTENTS	v
LIST OF ILLUSTRATIONS	vii
LIST OF TABLES	vii
1.0 GENERAL INFORMATION	1
1.1 How To Use Manual	1
2.0 FUNCTIONAL DESCRIPTION	3
2.1 Base Frame Assembly	3
2.2 Raising Springs	3
2.3 Air System	3
2.4 Lower Frame Assembly	4
2.5 Upper Frame Assembly	4
2.6 Coupling Rod Assembly	4
2.7 Pan Head Assembly	4
2.8 Pan Guide	5
2.9 Oscillation Damper	5
2.10 Safety System	5
3.0 SPECIAL TOOLS AND MATERIALS	7
3.1 Spanner Wrench	7
3.2 KM 11 Gauge	7
3.3 Grease	8
3.4 Electrical Contact Grease	8
3.5 Hydraulic Oil	8
3.6 Locktite	8
4.0 INSTALLATION	9
4.1 Installation	9
4.2 Pre-operational Checks	10
5.0 SCHEDULED MAINTENANCE	11
5.1 Ball Bearing Inspection	12
5.2 Bushing Inspection	13
5.3 Carbon Strip Inspection	13
5.4 Operation Inspection	14

USB00000086_0731

TABLE OF CONTENTS

Title **Page**

6.0 TROUBLESHOOTING 15

7.0 ADJUSTMENTS 17
- 7.1 Diagonal Cables 17
- 7.2 Pan Guide 17
- 7.3 Parallelism of Carbon Strips 17
- 7.4 Coupling Rod 18
- 7.5 Contact Force 18
- 7.6 Height of Pantograph 19
- 7.7 Raising and Lowering Speed 19

8.0 OVERHAUL AND REPAIR 21
- 8.1 Removal From Vehicle 58
- 8.2 Disassembly 58
- 8.2.1 Disassembly of Air Cylinder Assembly 59
- 8.3 Assembly 60
- 8.3.1 Assembly of Air Cylinder Assembly 64

LIST OF ILLUSTRATIONS

Reference **Page**

Figure 3.1-1: Spanner Wrench 7
Figure 3.2-1: Static Force Chart 7
Figure 5.1-1: Bearings 12
Figure 5.3-1: Carbon Wear 13
Figure 7.7-1: Raising and Lowering Speed 19
Figure 8.0-1: Pantograph 22
Figure 8.0-2: Base Frame Assembly 26
Figure 8.0-3: Lower Frame Assembly 28
Figure 8.0-4: Upper Frame Assembly 30
Figure 8.0-5: Raising Mechanism 32
Figure 8.0-6: Spring Assembly 34
Figure 8.0-7: Pneumatic System 36
Figure 8.0-8: Air Cylinder Assembly 40
Figure 8.0-9: Air Cylinder 42
Figure 8.0-10: Hydraulic Cylinder 44
Figure 8.0-11: Latch Assembly 46
Figure 8.0-12: Coupling Rod 48
Figure 8.0-13: Pan Guide Assembly 50
Figure 8.0-14: Pan Head 52
Figure 8.0-15: Safety System 56

LIST OF TABLES

Reference **Page**

Table 1.0-1: Specifications 2
Table 5.0-1: Scheduled Maintenance 12
Table 6.0-1: Troubleshooting 15
Table 8.3-1: Torque Chart 60

This page intentionally left blank

1.0 GENERAL INFORMATION

This maintenance manual is designed specifically to cover the single arm Pantograph, Part Number 351-05701, designed by Schunk Bahntechnik Ges.mbH, manufactured by UKM Co., Inc., Kulpsville, PA 19443.

The pantograph is designed for mounting on the roof of a locomotive or other electrically powered vehicle. Its function is to collect current from an overhead conductor wire and feed the current into the vehicle for distribution to the drive motors, utility circuits, and the environmental systems associated with the vehicle. The pantograph design allows travel in either direction.

Relative to its light weight, the pantograph is very durable and possesses a high current carrying capability. Its simple design means that the pantograph requires a minimum of periodic maintenance and few repairs in normal use. Incorporation of proven bearing technology and patented hydraulic damper are important factors in the low maintenance design.

1.1 How To Use Manual

To repair the Pantograph properly, a knowledge of the components, and how they are assembled is necessary. This manual is divided into chapters covering Functional Description, Installation, Scheduled Maintenance, Troubleshooting, Adjustments, and Overhaul and Repair.

The parts lists in this manual are represented in a breakdown format with major assemblies identified first followed by its attached subassemblies and detail parts. Assembly relationship is indicated by using an indenture system. The indenture system is illustrated as follows:

Section- Figure- Index	QTY	Description 1 2 3 4 5
		Major Assemblies
		• Attached Sub Assembly
		• • Detail Parts of Sub Assembly
		• Detail Parts of Major Assemblies

Table 1.0-1: Specifications

Minimum height with insulators	426 + 20 mm (16.77 + 0.8 in.)
Minimum working height	635 mm (25 in.)
Maximum working height	3800 mm (149.61 in.)
Pan head width	1981.2 mm (12 ft, 5.60 in.)
Maximum length in lowered position	2757 mm (9 ft 1in.)
Total weight	247 kg (545 lb)
Carbon strips	
Length	1371.6 mm (54.00 in.)
Material	Metalized graphite-carbon
Voltage	
Minimum	525 VDC
Nominal	750 VDC
Maximum	950 VDC
Current	
Running (maximum)	1200 A
Peak	1800 A
Static upward force on carbon strips	70 N ± 10 N (15.5 lb ± 2.25 lb)
Maximum operating speed	80 - 100 km/h (50 - 62 mph)
Type	Air
Lowering time	5 - 7 seconds
Rising time	5 - 7 seconds

2.0 FUNCTIONAL DESCRIPTION

The following paragraphs describe the function and operation of the component assemblies that comprise the pantograph.

2.1 Base Frame Assembly

The base frame provides the means of mounting the pantograph to the top of the vehicle, as well as the support for the pantograph. It is a welded structure, consisting of two longitudinal bars and two transverse bars.

The bearing assemblies that support the lower frame pivots are located in mounting blocks on either longitudinal bar. These bearings (two on each side) are retained in the mounting blocks using snap rings. A cap screw extends through the bearing mounting shaft on each side, and threads into the end of the lower frame main shaft, thus supporting the lower frame main shaft and effectively locking it to the bearings.

The base frame also provides the anchor points for the raising springs, lowering cylinder, and rubber stops which the pantograph lower and upper frames rest on when in the lowered position.

2.2 Raising Springs

The raising springs are anchored to the base frame and are connected to pivot brackets on the lower frame through lengths of steel cable.

The raising springs are extension type springs, which are pulled into their extended positions as the pantograph is lowered by the lowering cylinder. When the latch is released, the springs raise the pantograph. As the springs compress, they pull on the steel cables and cause the lower frame to pivot upward.

The compressing force of the raising springs is adjustable. The amount of spring compression determines the force of contact between the pan head carbon strips and the overhead wire.

2.3 Air System

The air system provides means to lower, latch, and raise the pantograph. An air cylinder, tandem mounted with a hydraulic cylinder for speed control, is used to lower the pantograph. The two cylinders are mounted in line with their piston rods attached together. The hydraulic cylinder is filled with aircraft hydraulic fluid. The front and rear ports are connected together through two flow control valves working in opposite directions. During operation fluid is displaced from one end of the cylinder to the other through these valves. One providing speed control in the raising direction and the other in the lowering direction. By adjusting the flow of these valves separate speed control is possible for each direction to any speed desired.

A latch mechanism mounted to the base frame is used to secure the pantograph in the lowered position. The upper frame has a latch keeper which strikes the latch hook when the

USB00000086_0737

pantograph is lowered. The hook is spring loaded and retracts over the keeper. To raise the pantograph an air cylinder is used to unlatch the hook. If there is no air supply the latch mechanism has a manual override. Attached to the hook is a loop that can be pulled with an insulated pole to unlatch the pantograph.

When raising the pantograph the air cylinder is also used to control the raising speed. As the lower frame rotates upwards it pushes on the air cylinder forcing it to retract. The retraction speed it restricted by the controlled flow of the hydraulic cylinder flow control valves. In the event that the air cylinder is not extended and the pantograph needs to be raised, a manual reset lever is mounted to the base frame. This lever connects to the air cylinder through a linkage. Pulling the lever at a slow steady rate will extend the cylinder. **Excessive force on the lever will not cause the air cylinder to extend faster and will only cause damage to the lever and it's linkage. By design the hydraulic system will only operate at a steady rate regardless of the force exerted.**

2.4 Lower Frame Assembly

The lower frame assembly is a welded tubular structure which is bearing mounted to the base frame. The top end of the lower frame is joined to the upper frame using bearings in an identical configuration as which the bottom end of the lower frame is mounted to the base frame. Provisions are also made to attach the hydraulic damper and pan guide rod.

2.5 Upper Frame Assembly

The upper frame assembly is also a welded tubular structure. It is attached to the top end of the lower frame. The pan head is mounted on the upper end of the upper frame. The hydraulic damper is connected between points on the upper and lower frames.

As the raising springs pull the lower frame upward, the upper frame assembly is pivoted upward simultaneously through the action of an adjustable coupling rod assembly. Refer to the following paragraph for a description of the coupling rod assembly.

2.6 Coupling Rod Assembly

The function of the coupling rod assembly is to cause the upper frame to pivot upward as the raising springs pull the lower frame assembly upward. On pantographs equipped with the safety system, the coupling rod assembly is also used to transmit the breakdown force from the upper frame to the breakdown safety device.

The coupling rod is mounted on each end using a double bearing arrangement similar to the one used to mount both ends of the lower frame. The yokes at each end of the coupling rod are held in place by a cap screw and nut. The bearings are retained in the coupling rod yokes by snap rings.

2.7 Pan Head Assembly

The pan (pantograph) head is attached to the top end of the upper frame. It includes the carbon strips and the suspension components that support the carbon strips and keep them in proper alignment with the overhead wire.

The pan head assembly pivots around a shaft (spindle) that is secured to the inside of the upper frame cross member by two keys.

Each carbon collector includes a metal impregnated graphite/carbon contact strip. The carbon strip is soldered to the carrier.

The carbon strips are suspended on each end by flat leaf springs. By attaching the leaf springs solidly in the center, the ends can flex independently and the actual effect of independent suspension is achieved. The ends of the leaf springs are joined to the carbon strip assemblies through clamps that are attached solidly to the ends of the leaf springs and are allowed to pivot around a hollow pin as the associated carbon strip assembly moves up and down.

The pan head horns are aluminum carriers which extend beyond the carbons on both sides of the pantograph. Their purpose is to conduct current from an overhead wire that is excessively non-centered over the car, and to prevent damage from the wire becoming caught under the pan head.

2.8 Pan Guide

The pan guide rod keeps the pan head parallel with the overhead wire. It is attached to a lever that is secured to one of the rocker suspensions that support the pan head suspensions. When properly adjusted, this rod will keep the pan head parallel during all movements.

2.9 Oscillation Damper

The oscillation damper is connected between the upper and lower frames. Its function is to dampen all oscillations that occur as the vehicle moves down the track. By absorbing these oscillations, the damper allows the carbon strips to maintain constant contact with the overhead wire.

2.10 Safety System

The safety device is designed to prevent severe damage to the pantograph or the overhead wire system as a result of extreme contact between the pan head and an overhead obstruction. If sufficient force should result from such contact, the force is transmitted through the coupling rod and into the safety system where a shear pin will break, by design. The safety system will activate, releasing tension from one spring, and the pantograph will collapse to its lowered position.

This page intentionally left blank

3.0 SPECIAL TOOLS AND MATERIALS

With the exception of the spanner wrench, no special tools are required to assemble the pantograph. All hardware used on the pantograph is metric DIN standard. Air and hydraulic fittings are U.S. inch size.

3.1 Spanner Wrench

The spanner wrench (UKM #351-05990) is used to secure the raising springs from rotating when turning the adjustment bolts. Each of the spring caps have two holes to accept the prongs of the spanner wrench.

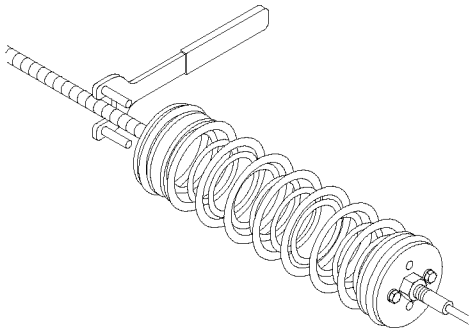

Figure 3.1-1: Spanner Wrench

WARNING

Do not use your hand to prevent the spring from rotating. As the spring contracts your fingers could get pinched between the coils.

3.2 KM 11 Gauge

The contact pressure of the pantograph, in its entire range of operation, is an important parameter, which has a direct effect on the life of the carbon strips and in particular the catenary. The KM 11 Gauge has been designed to measure the static force of pantographs,

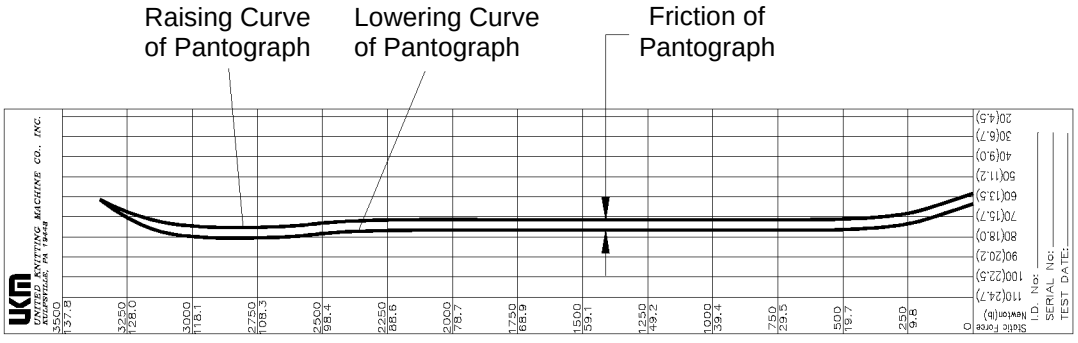

Figure 3.2-1: Static Force Chart

recording the upward force over the whole raising height during both raising and lowering of the pantograph. The Gauge can be used either stationary or as a mobile unit.

USB00000086_0741

3.3 Grease

Only the use of *AUTOL-TOP 2000* grease (referred to as *Top 2000* grease throughout this manual) is recommended. It can be supplied through UKM Co., Inc. It is a high quality synthetic waterproof grease that is used in underwater applications. This grease only needs to be applied when the pantograph is assembled and will not need to be reapplied until the next overhaul of the pantograph.

3.4 Electrical Contact Grease

The use of NOALOX®, manufactured by IDEAL INDUSTRIES, INC., Sycamore, IL 60178, (referred to as *electrical contact grease* throughout this manual) is recommended for all electrical connections e.g.: shunt connections, mating surfaces of horns and carbon strips to prevent corrosion and provide good electrical contact. Other products of equal or better quality may be used.

3.5 Hydraulic Oil

The oil used in the hydraulic cylinder is Texaco Aircraft Hydraulic Oil 5606G. This is the only oil that should be used. Aircraft Hydraulic Oil 5606G is a mineral oil based fluid. It contains a low viscosity base oil, oxidation inhibitors, and anti-wear agents. It is dyed a distinctive red color.

3.6 Locktite

Two types of loctite are used on the pantograph. The first is Loctite #242. It is a removable thread locker used in several places where other locking methods are not practical. The second is Loctite #592. It is a pipe thread sealant used on the hydraulic fittings.

4.0 INSTALLATION

WARNING

Before working on a pantograph that is equipped with a safety system, always install the yellow safety pin. Leaning on the upper or lower frame or applying downward force in some other way could cause the shear pin to break. The pantograph would then collapse, injuring anyone who has a limb or other body part within the envelope of the pantograph.

To remove safety pin, reach under pantograph, keeping remainder of your body outside the envelope of the pantograph. The safety pin should be loose in hole. Do not force safety pin from hole. A tight safety pin could indicate that the shear pin is fractured, causing pantograph to collapse when safety pin is removed.

Attach an appropriate warning tag to the pantograph up/down switch in the cab if service work is to be performed on a pantograph. Unexpected lowering or raising of the pantograph while performing service work could cause serious injury.

CAUTION

Lift the pantograph only by the lifting lugs located on the base frame. Attempting to lift the pantograph at any other point could cause structural damage. Secure the latch down hook to the latch keeper on the upper frame with wire or rope to prevent accidental raising during lifting or moving.

The lowering cylinder must be extended before raising the pantograph. If the pantograph is allowed to be raised, without the air cylinder extended to restrict the speed, the spring force plus the raising inertia of the pantograph could cause damage or injury. To prevent this the air cylinder should be extended either by a "down" command from the vehicle controls or if air is not available by the manual reset lever provided on the pantograph. When using the reset lever it should be pulled at a slow steady rate. Excessive force on the lever will not cause the air cylinder to extend faster and will only cause damage to the lever and it's linkage. By design the hydraulic system will only operate at a steady rate regardless of the force exerted.

4.1 Installation

1. Attach the insulators to the vehicle roof.

2. Install the pantograph on top of the insulators and fasten with 3/4" bolts, lock washers, and flat washers. Apply a thin coat of *Top2000* grease to the threads of the bolts to prevent rust. Torque the bolts to 140-150 ft.-lbs.

3. Attach the vehicle main power cables to the high voltage tap on the pantograph base frame. Apply electrical contact grease under the electrical connection to prevent corrosion.

4. Attach air lines to the lowering cylinder and latch air connections.

4.2 Pre-operational Checks

1. Remove rope or chain securing pan head in lowered position and any lifting straps or chains.

2. Raise the pantograph using the vehicle controls and inspect for proper operation. Check for proper raising time and adjust if necessary.

3. Check that the pantograph reaches the maximum operating height.

4. Check the contact force with a spring scale for quick checks or use the KM 11 gauge for more precise measurements. Adjust if necessary.

5. Check the pan head for free movement and suspension.

6. Place a straight edge across the carbon strips and check for parallelism. To assure uniform wear, and proper contact with the wire, it is important that any deviations are corrected.

7. Remove the yellow safety pin from the safety system and place in the storage bracket.

5.0 SCHEDULED MAINTENANCE

The pantograph requires a minimum of scheduled maintenance to keep it in good working order. The visual inspections, if carried out at the recommended intervals, as described below will reveal any impending problems. Corrective action can be taken before the problem becomes serious.

WARNING

Before working on a pantograph that is equipped with a safety system, always install the yellow safety pin. Leaning on the upper or lower frame or applying downward force in some other way could cause the shear pin to break. The pantograph would then collapse, injuring anyone who has a limb or other body part within the envelope of the pantograph.

To remove safety pin, reach under pantograph, keeping remainder of your body outside the envelope of the pantograph. The safety pin should be loose in hole. Do not force safety pin from hole. A tight safety pin could indicate that the shear pin is fractured, causing pantograph to collapse when safety pin is removed.

Attach an appropriate warning tag to the pantograph up/down switch in the cab if service work is to be performed on a pantograph. Unexpected lowering or raising of the pantograph while performing service work could cause serious injury.

CAUTION

Lift the pantograph only by the lifting lugs located on the base frame. Attempting to lift the pantograph at any other point could cause structural damage. Secure the latch down hook to the latch keeper on the upper frame with wire or rope to prevent accidental raising during lifting or moving.

The lowering cylinder must be extended before raising the pantograph. If the pantograph is allowed to be raised, without the air cylinder extended to restrict the speed, the spring force plus the raising inertia of the pantograph could cause damage or injury. To prevent this the air cylinder should be extended either by a "down" command from the vehicle controls or if air is not available by the manual reset lever provided on the pantograph. When using the reset lever it should be pulled at a slow steady rate. Excessive force on the lever will not cause the air cylinder to extend faster and will only cause damage to the lever and it's linkage. By design the hydraulic system will only operate at a steady rate regardless of the force exerted.

Table 5.0-1: Scheduled Maintenance	
Interval	**Inspection**
30 Days	Inspect carbon strips. See Section 5.3
	Check the base frame insulators for dirt accumulation.
	Check lowering cylinder assembly for air or oil leaks.
	Check oil level of the lowering cylinder assembly's hydraulic cylinder.
	Check ball bearings for excessive weeping or leaking seals.
	Check latch for proper latching and unlatching.
60 Days	Check all attaching screws and nuts for looseness or damage. Pay particular attention to the carbon strip assembly attaching screws.
	Inspect all shunt cables for breaks, corrosion or loose connections.
	Inspect raising springs for corrosion, distortion, cracks, or other defects. Also check the cable assemblies that connect the raising springs to the lower frame for breaks, corrosion, or loose attaching nuts.
90 Days	Check for proper operation. See Section 5.4
6 Months	Check contact force.
	Inspect ball bearings. See Section 5.1
	Inspect bushings. See Section 5.2
I Year	Inspect oscillation damper. Remove damper and check for leaks. Extend and compress through its stroke. The damper should extend freely and provide restriction when compressing.

5.1 Ball Bearing Inspection

The base frame and upper frame pivot bearings feature a fixed, and floating, sealed double bearing arrangement. The coupling rod also features fixed bearings at each end. These bearings require no lubrication or periodic maintenance. The space between the two bearings is packed with *Top 2000* grease to prevent condensation and rust. This space should be repacked with grease every 6 years or if bearing replacement is necessary.

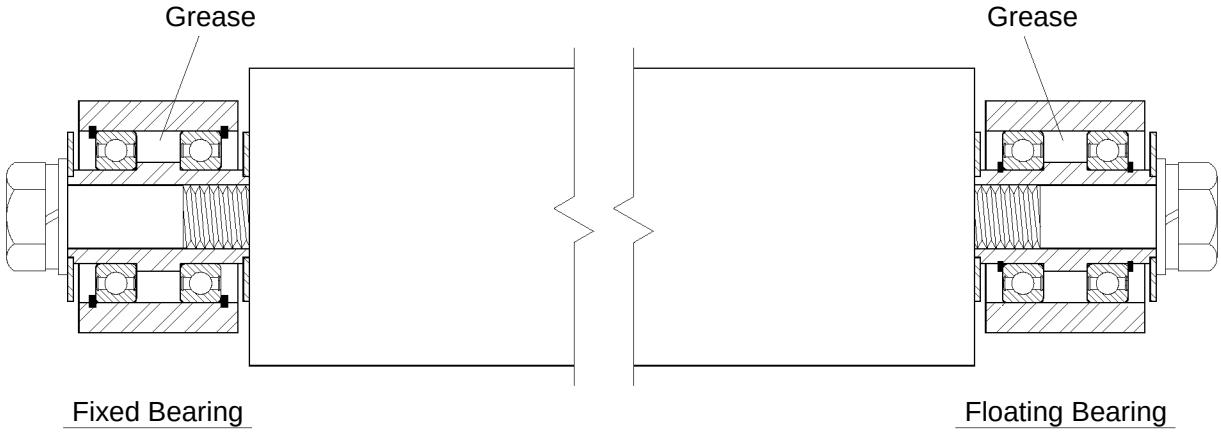

Figure 5.1-1: Bearings

To properly inspect the bearings would require disassembly of the pantograph, however the

following inspections can reveal problems in the bearings:

1. When checking the contact force using the KM 11 gauge, bad or rough rotating bearings will show on the graph. There will either be excessive variation between the raising and lowering forces or erratic waves in the chart. This should be checked every 6 months when checking the contact force or more frequently if necessary.

2. Check all bearing locations for excessive weeping or leaking seals every 30 days.

5.2 Bushing Inspection

Bushings used on the pantograph are made from non metallic material or Teflon coated bronze and are maintenance free. However they should be checked for damage, dirt, or wear. Any bushings with stiff movement should be inspected, cleaned, or replaced if necessary. When replacing bushings a coat of *Top 2000* grease should be appled.

5.3 Carbon Strip Inspection

Carbon strips should be checked at every vehicle inspection for damage and/or wear. Damage and abnormal wear can be detected in their early stages.

It is important that both carbon strips are parallel to each other to insure proper wear and good contact. A straight edge should be placed across the carbon strips. If they are not parallel adjustment is necessary. See Section 7.3

Even, gradual wear is normal since the carbon strips are in constant contact with the overhead wire. Normal wear will occur if the overhead wire system is in good condition, wire stagger is correct, and the two carbon strips are parallel. Excessive contact force will cause rapid premature wear.

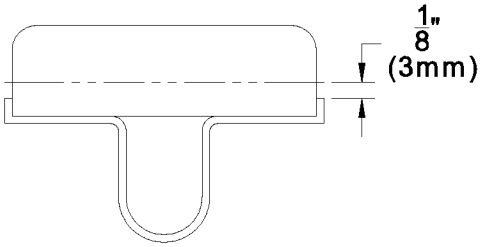

Figure 5.3-1: Carbon Wear

The minimum allowable carbon thickness is 1/8"(3mm) at any point on either carbon strip. A carbon thickness below this value will risk contact between the overhead wire and the metal carrier of the carbon strip. Contact between the overhead wire and any metal edge can cause damage or rapid wear to the wire.

If the carbon strips are chipped or cracked they must be replaced to prevent further damage. If there is excessive wearing on the end horns they should be replaced. Normally the end horns will need to be replaced once for every 2-3 sets of carbon strips.

When replacing carbon strips apply electrical contact grease between the carbon strips and horns. It may be necessary to grind a smooth transition between the carbon and horns in order to allow the overhead wire to run smoothly between them.

Both carbon strips need to be replaced at the same time. Replacing only one strip will cause uneven carbon height resulting in poor contact to the wire, rapid carbon wear, and possible arcing.

USB00000086_0747

5.4 Operation Inspection

At 90 day intervals raise and lower the pantograph several times and inspect for damage or improper operation. Pull down on pan head. Rotate and pivot the pan head suspension by hand. Check for rough operation or damage. Repair or replace any damaged components.

6.0 TROUBLESHOOTING

The following table is a guide for locating and correcting troubles with the pantograph.

Table 6.0-1: Troubleshooting		
DEFECT	**PROBABLE CAUSE**	**CORRECTION**
Pantograph does not raise or low	No current supply from the vehicle.	Check supply battery.
		Check electrical connections.
	The inner friction of the pantograph is too high.	Check pantograph for damage.
		Check for damaged bearings.
	Broken or weak springs.	Replace springs.
Pantograph raises or lowers slowly.	The inner friction of the pantograph is too high.	Check pantograph for damage.
		Check for damaged bearings.
	Flow control valves on lowering cylinder not adjusted properly.	Adjust valves.
Frequent interruption of current transmittal (strong arcing).	Contact force is too low.	Check contact force.
	The inner friction of the pantograph is too high.	Check pantograph for damage.
		Check for damaged bearings.
	Cracks or chips in carbon strip.	Replace carbon strip.
	Pan head suspension works too slow.	Check for damaged bushings and flat springs.
	Carbon strips are not adjusted parallel.	Adjust carbon strips so they are parallel.
	Pan guide not properly adjusted, restricting pan head rotation.	Adjust pan guide properly.
Uneven wear on carbon strip.	Carbon strips are not adjusted parallel.	Adjust carbon strips so they are parallel.
	Pan guide not properly adjusted, restricting pan head rotation.	Adjust pan guide properly.
Current flash over from base frame to vehicle roof.	Pantograph mounting insulators are dirty.	Clean insulators with mild non-abrasive detergent and rinse clean.
Pantograph does not latch.	Check for damage to latch.	Repair damage.

USB00000086_0749

Table 6.0-1: Troubleshooting		
DEFECT	**PROBABLE CAUSE**	**CORRECTION**
	Base frame bumpers not adjusted properly, preventing pantograph from lowering completely.	Adjust bumpers.

7.0 ADJUSTMENTS

With the exception of contact force, the following adjustments will not need to be re- adjusted unless performing some type of repair or service. All the following adjustments should be checked or performed after assembly and/or prior to putting the pantograph in service.

7.1 Diagonal Cables

The purpose of the diagonal cables is to provide stiffness to the upper frame and to center it to the pantograph.

Loosen turnbuckle jam nuts(9 & 10) and adjust turnbuckle(6) so that there is equal thread to allow adjustment. Mark the center of the upper frame, and the center of the base frame with pieces of masking tape. Tighten the cables until they are snug and the upper frame is centered. Do not over tighten. This will cause a twist in the upper frame. Tighten turnbuckle jam nuts. (Figure 8.0-4)

7.2 Pan Guide

Secure the pantograph at 65" above resting position with a rope or chain. Place a level across the carbon strips. If not level, adjust as follows. (Figure 8.0-13)

1. Remove locknut(8), washers(6 & 7), and socket(5).
2. Loosen jam nut(3).
3. Pull rod end(2) from bolt(4).
4. Turn rod end as necessary until pan head it level.
5. Replace socket(5), washers(6 & 7), and locknut(8).
6. Tighten jam nut(3).

7.3 Parallelism of Carbon Strips

Loosen jam nuts on guiding units. Place a straight edge across carbon strips. Adjust turnbuckles in or out as necessary until the contact strips are parallel throughout their entire length. Tighten jam nuts. (Figure 7.3-1)

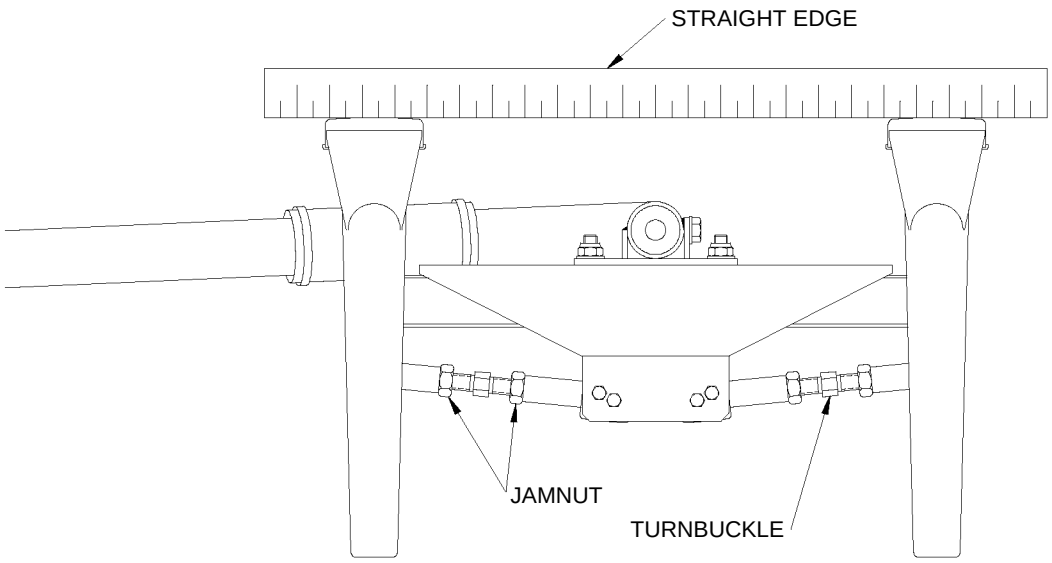

Figure 7.3-1: Parallelism of Carbon Strips

7.4 Coupling Rod

Adjustments to the coupling rod directly effect the contact force. Once set the coupling rod should not need readjustment. See section 7.5 for coupling rod adjustment.

7.5 Contact Force

Before checking or adjusting the contact force disconnect one end of the oscillation damper because in dynamic motion the damper causes an increase in the contact force. The contact force is a static measurement taken through a continuous motion.

1. Loosen jam nuts(4 & 5) and adjust the coupling rod turnbuckle(3) so that the upper frame and lower frame contact their respective bumpers simultaneously. Adjustment of the bumpers may be required. The base frame, lower frame, and upper frame should be fairly level to each other. (Figure 8.0-12)

2. Check the contact force throughout its entire range. To accurately check the contact force, it is recommended to use the Schunk KM 11 gauge. A spring scale can be used to get a quick, less accurate reading. The readings should be within +/-2.25Lbs. of the nominal value.

3. If the values are out of tolerance in the lower range the cam adjustment bolts(8) should be adjusted clockwise to increase or counter clockwise to decrease contact force. The bolts should be adjusted equally. Before adjusting bolts(8) loosen nuts(13). When finished tighten jam nuts(9) and nuts(13). (Figure 8.0-3)

4. If the values are still out of tolerance the coupling rod should be adjusted. Shortening the coupling rod will increase the contact force while lengthening the coupling rod will decrease the contact force. Tighten jam nuts(4 & 5) when finished. (Figure 8.0-12)

5. Check the contact force again through the entire range. It may be necessary to perform steps 3 and/or 4 again.

6. If necessary adjust the raising springs to achieve the proper nominal contact force.

7.6 Height of Pantograph

Loosen jam nut(7). Turning adjustment bolt(6) clockwise will lower the height or turning the adjustment bolt counterclockwise will raise the height. After proper height is achieved tighten jam nut(7) while holding adjustment bolt(6) to prevent it from turning. Recheck the height. (Figure 8.0-3)

7.7 Raising and Lowering Speed

The pantograph is shipped from the factory preset to raise at 7 seconds and lower at 7 seconds. Several factors such as contact force, oil viscosity, higher summer temperatures, lower winter temperatures, air pressure, and cylinder wear in can cause these values to change slightly, thus requiring adjustment.

To adjust the lowering speed loosen the locknut on the lowering control valve. Turn the adjustment screw clockwise to decrease the speed and counterclockwise to increase the speed. The screw provides very precise adjustment. Only turn the screw 1/4 turn or less at a time and then check the lowering speed. **Excessive adjustment can cause the flow through the valve to be too high and allow the pantograph to lower at a fast rate causing damage or injury.** After the speed is satisfactorily set tighten the locknut.

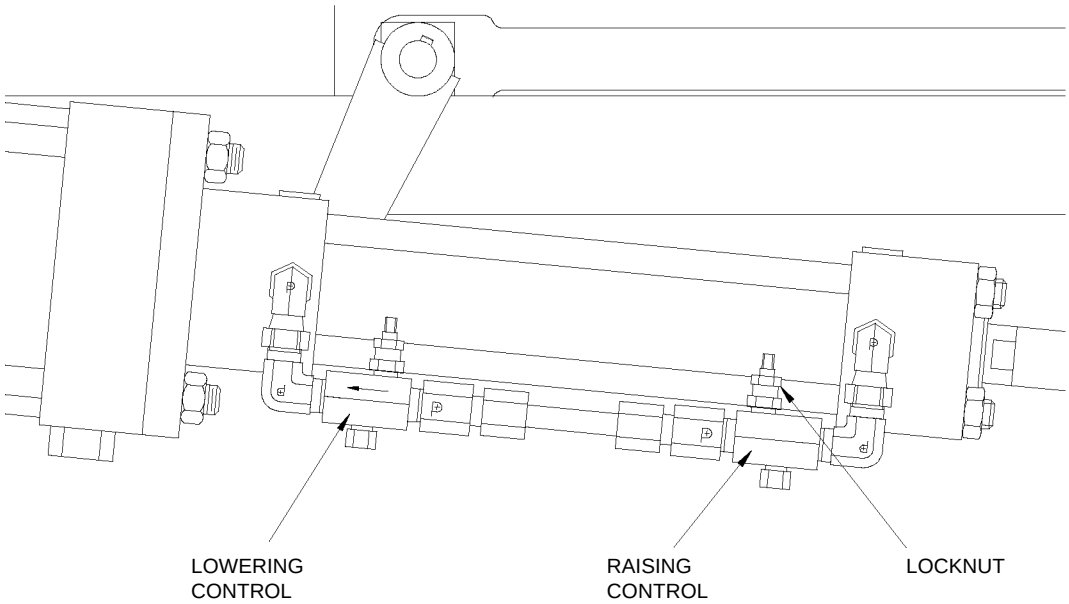

Figure 7.7-1: Raising and Lowering Speed

To adjust the raising speed loosen the locknut on the raising control valve. Turn the adjustment screw clockwise to decrease the speed and counterclockwise to increase the speed. The screw provides very precise adjustment. Only turn the screw 1/4 turn or less at a time and then check the lowering speed. **Excessive adjustment can cause the flow through the valve to be too high and allow the pantograph to lower at a fast rate causing damage or injury.** After the speed is satisfactorily set tighten the locknut.

When installing a new air cylinder assembly, or adjusting one where the speed setting is unknown, loosen the locknuts on both valves and turn the adjustment screws clockwise completely. This will close the valves, locking the cylinder in it's position, preventing damage or injury from fast raising or lowering. Back off the adjustment screws counterclockwise in 1/4 turn increments and check raising and lowering speed after each adjustment. Continue until the speed is satisfactory then tighten the locknuts.

8.0 OVERHAUL AND REPAIR

This section covers the procedures for overhaul and repair of the pantograph. If new parts are required only OEM or OEM approved parts should be used. Repair should only be required when there is damage to the pantograph. Overhaul of the pantograph should be performed every 8-10 years providing that scheduled inspection and maintenance has been performed regularly.

WARNING

Before working on a pantograph that is equipped with a safety system, always install the yellow safety pin. Leaning on the upper or lower frame or applying downward force in some other way could cause the shear pin to break. The pantograph would then collapse, injuring anyone who has a limb or other body part within the envelope of the pantograph.

To remove safety pin, reach under pantograph, keeping remainder of your body outside the envelope of the pantograph. The safety pin should be loose in hole. Do not force safety pin from hole. A tight safety pin could indicate that the shear pin is fractured, causing pantograph to collapse when safety pin is removed.

Attach an appropriate warning tag to the pantograph up/down switch in the cab if service work is to be performed on a pantograph. Unexpected lowering or raising of the pantograph while performing service work could cause serious injury.

CAUTION

Lift the pantograph only by the lifting lugs located on the base frame. Attempting to lift the pantograph at any other point could cause structural damage. Secure the latch down hook to the latch keeper on the upper frame with wire or rope to prevent accidental raising during lifting or moving.

The lowering cylinder must be extended before raising the pantograph. If the pantograph is allowed to be raised, without the air cylinder extended to restrict the speed, the spring force plus the raising inertia of the pantograph could cause damage or injury. To prevent this the air cylinder should be extended either by a "down" command from the vehicle controls or if air is not available by the manual reset lever provided on the pantograph. When using the reset lever it should be pulled at a slow steady rate. Excessive force on the lever will not cause the air cylinder to extend faster and will only cause damage to the lever and it's linkage. By design the hydraulic system will only operate at a steady rate regardless of the force exerted.

The following figures provide a detailed breakdown. Refer to these figures for a proper understanding of how the pantograph is assembled.

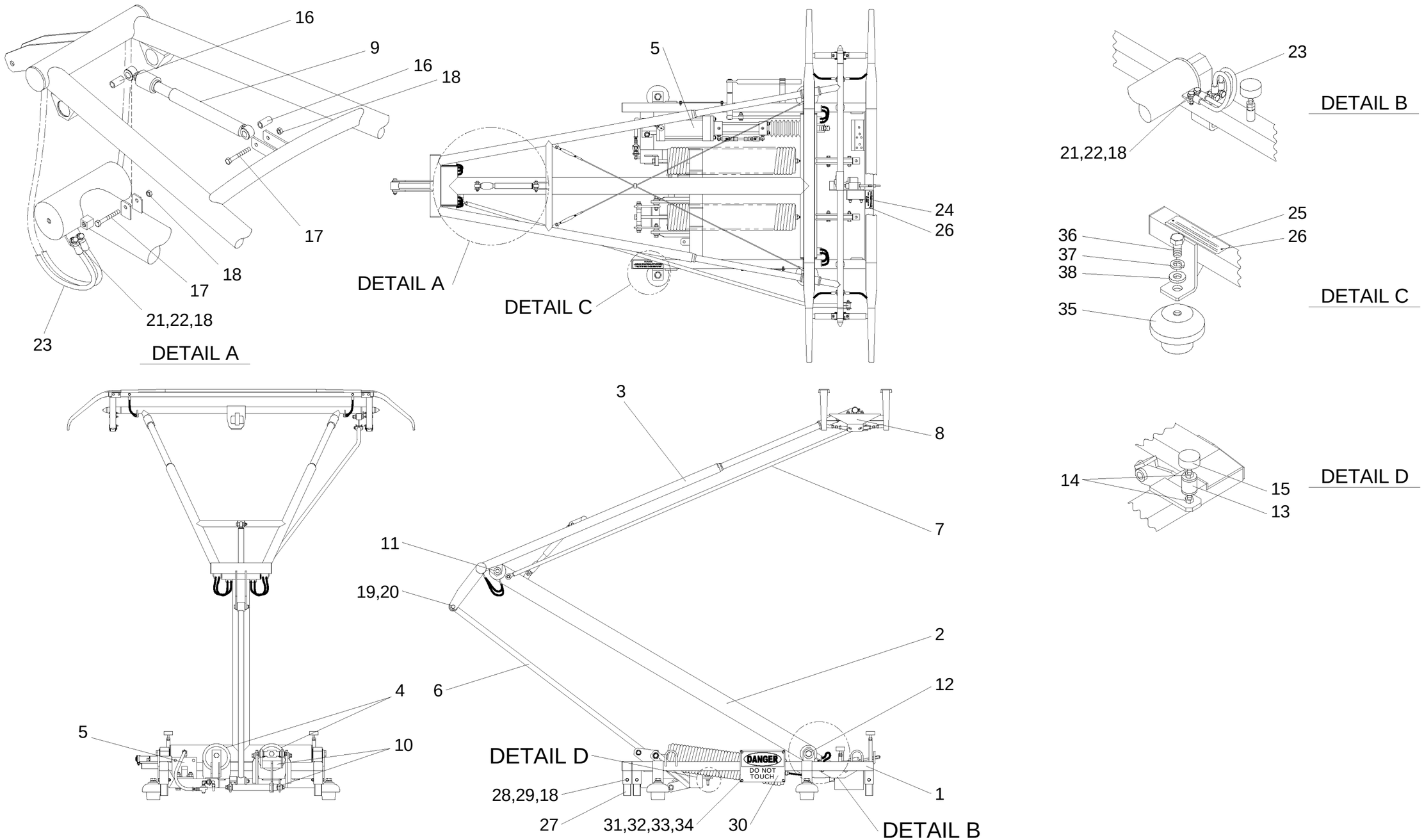

Figure 8.0-1: Pantograph

Section-Figure-Index	QTY	Description 1 2 3 4 5
8.0-1-		Pantograph
8.0-1-1	1	• Base Frame Assembly (See Figure 8.0-2)
8.0-1-2	1	• Lower Frame Assembly (See Figure 8.0-3)
8.0-1-3	1	• Upper Frame Assembly (See Figure 8.0-4)
8.0-1-4	1	• Raising Mechanism (See Figure 8.0-5)
8.0-1-5	1	• Pneumatic System (See Figure 8.0-7)
8.0-1-6	1	• Coupling Rod (See Figure 8.0-12)
8.0-1-7	1	• Pan Guide Assembly (See Figure 8.0-13)
8.0-1-8	1	• Pan Head (See Figure 8.0-14)
8.0-1--9	1	• Hydraulic Oscillation Damper
8.0-1-10	1	• Safety System (See Figure 8.0-15)
8.0-1-11	1	• Upper Frame Bearing Assembly (See Figure 8.0-4)
8.0-1-12	1	• Base Frame Bearing Assembly (See Figure 8.0-2)
8.0-1-13	1	• Bumper Mount
8.0-1-14	2	• Nut, Hex
8.0-1-15	1	• Bumper
8.0-1-16	2	• Axle
8.0-1-17	2	• Screw, Hex Cap
8.0-1-18	22	• Nut, Nylon Lock
8.0-1-19	2	• Nut, Nylon Lock
8.0-1-20	2	• Screw, Hex Cap
8.0-1-21	16	• Screw, Hex Cap
8.0-1-22	16	• Washer, Spring
8.0-1-23	8	• Shunt
8.0-1-24	1	• Name Tag, UKM/Schunk
8.0-1-25	1	• Name Tag, Safety Pin
8.0-1-26	4	• Drive Screw
8.0-1-27	4	• Leg
8.0-1-28	4	• Screw, Hex Cap
8.0-1-29	8	• Washer

Section-Figure-Index	QTY	Description 1 2 3 4 5
8.0-1-30	2	• Danger Sign
8.0-1-31	8	• Screw, Hex Cap
8.0-1-32	8	• Washer, Rubber Backed
8.0-1-33	8	• Washer
8.0-1-34	8	• Nut, Nylon Lock
8.0-1-35	4	• Insulator
8.0-1-36	4	• Screw, Hex Cap
8.0-1-37	4	• Washer, Lock
8.0-1-38	4	• Washer, Extra Thick

This page intentionally left blank

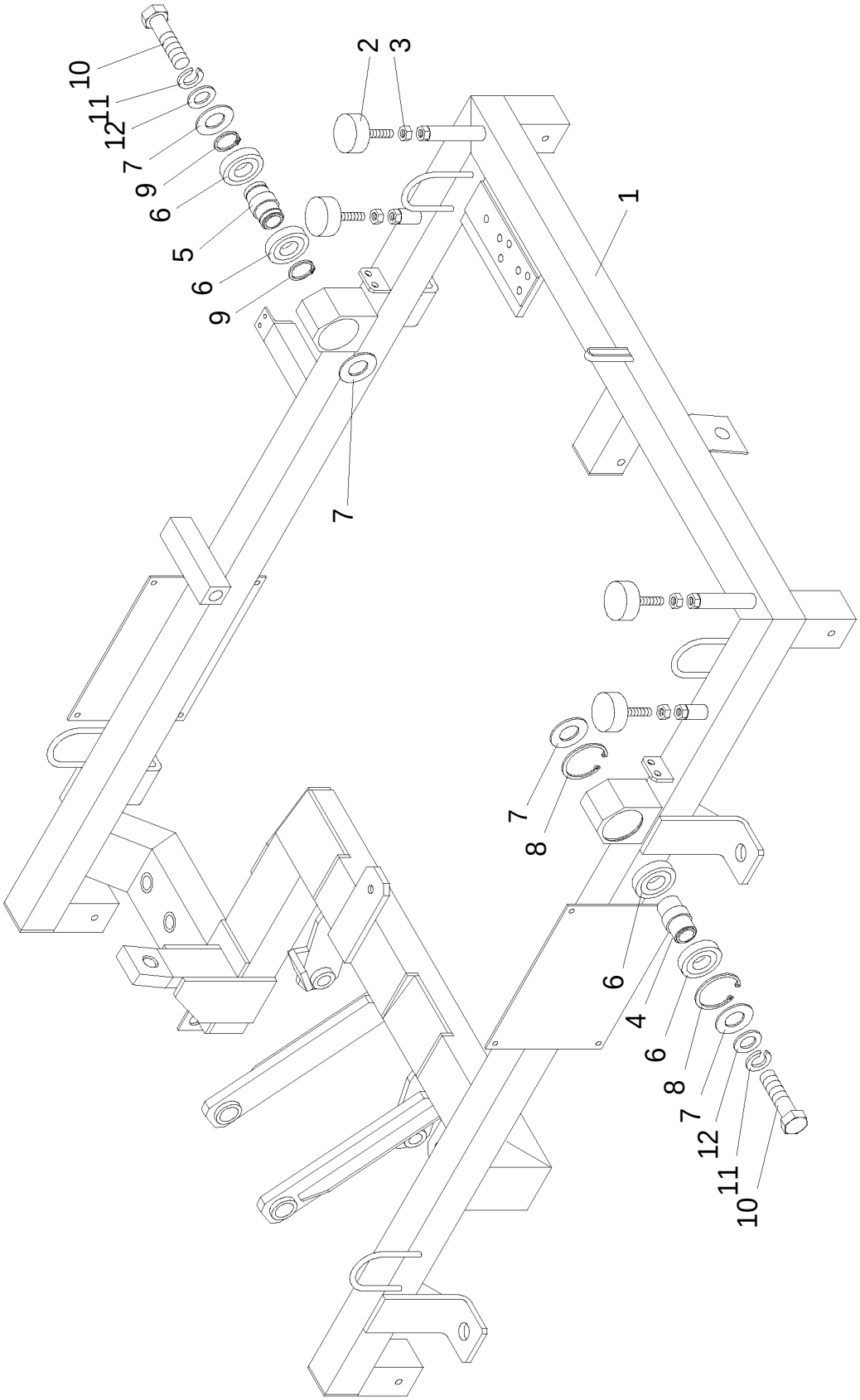

Figure 8.0-2: Base Frame Assembly

Section-Figure-Index	QTY	Description 1 2 3 4 5
8.0-2-		Base Frame Assembly
8.0-2-1	1	• Base Frame
8.0-2-2	4	• Bumper
8.0-2-3	4	• Nut, Hex
8.0-2-		Base Frame Bearing Assembly
8.0-2-4	1	• Bearing Shaft, Fixed
8.0-2-5	1	• Bearing Shaft, Floating
8.0-2-6	4	• Bearing
8.0-2-7	4	• Washer, Special
8.0-2-8	2	• Retaining Ring, Internal
8.0-2--9	2	• Retaining Ring, External
8.0-2-10	2	• Screw, Hex Cap
8.0-2-11	2	• Washer, Lock
8.0-2-12	2	• Washer, Flat

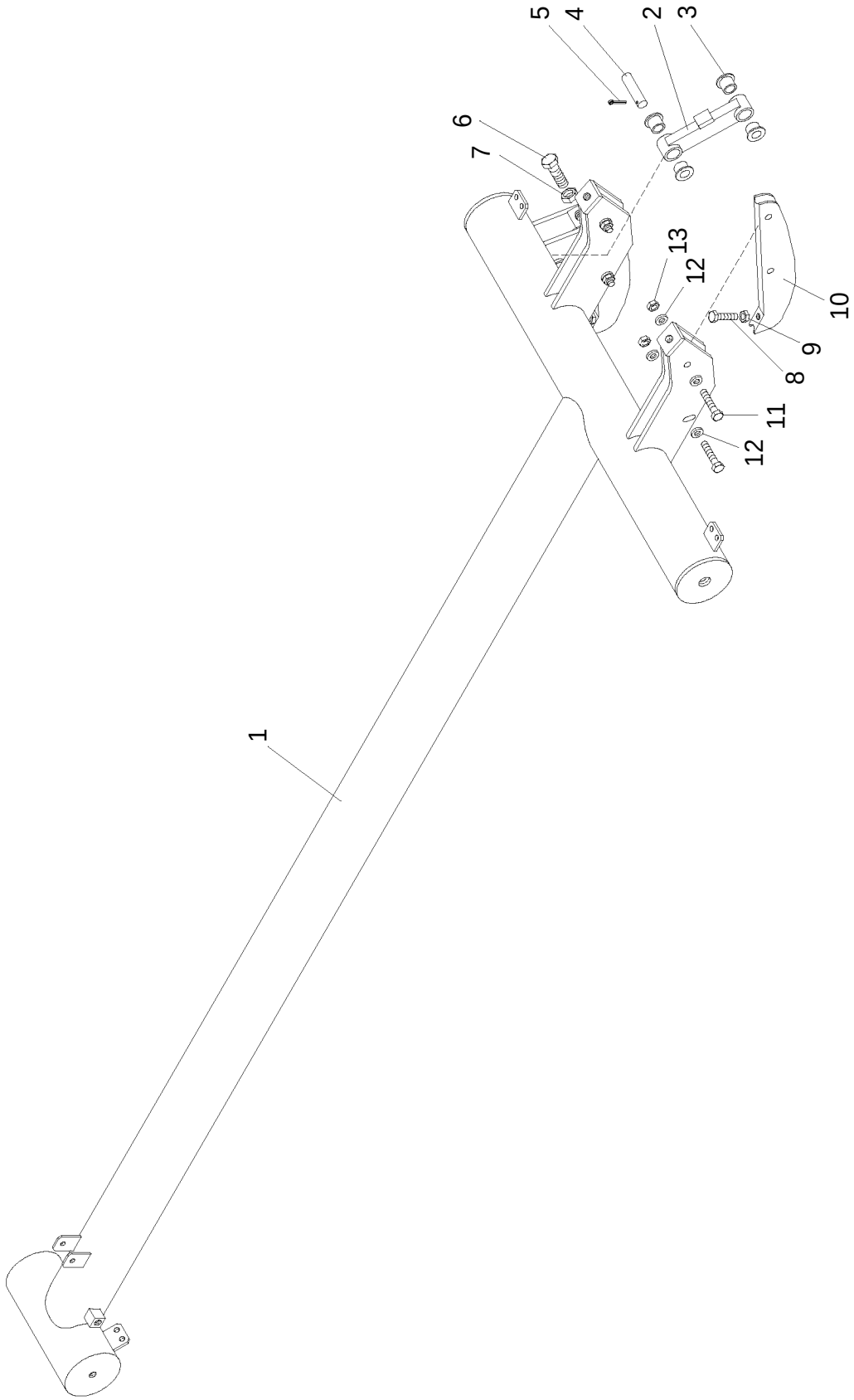

Figure 8.0-3: Lower Frame Assembly

Section-Figure-Index	QTY	Description 1 2 3 4 5
8.0-3-		Lower Frame Assembly
8.0-3-1	1	• Lower Frame
8.0-3-2	1	• Lever
8.0-3-3	4	• Flanged Bushing
8.0-3-4	1	• Shaft
8.0-3-5	1	• Pin, Cotter
8.0-3-6	1	• Screw, Hex Cap
8.0-3-7	1	• Nut, Hex
8.0-3-8	2	• Screw, Hex Cap
8.0-3-9	2	• Nut, Hex
8.0-3-10	2	• Cam
8.0-3-11	4	• Screw, Hex Cap
8.0-3-12	8	• Washer
8.0-3-13	4	• Nut, Nylon Lock

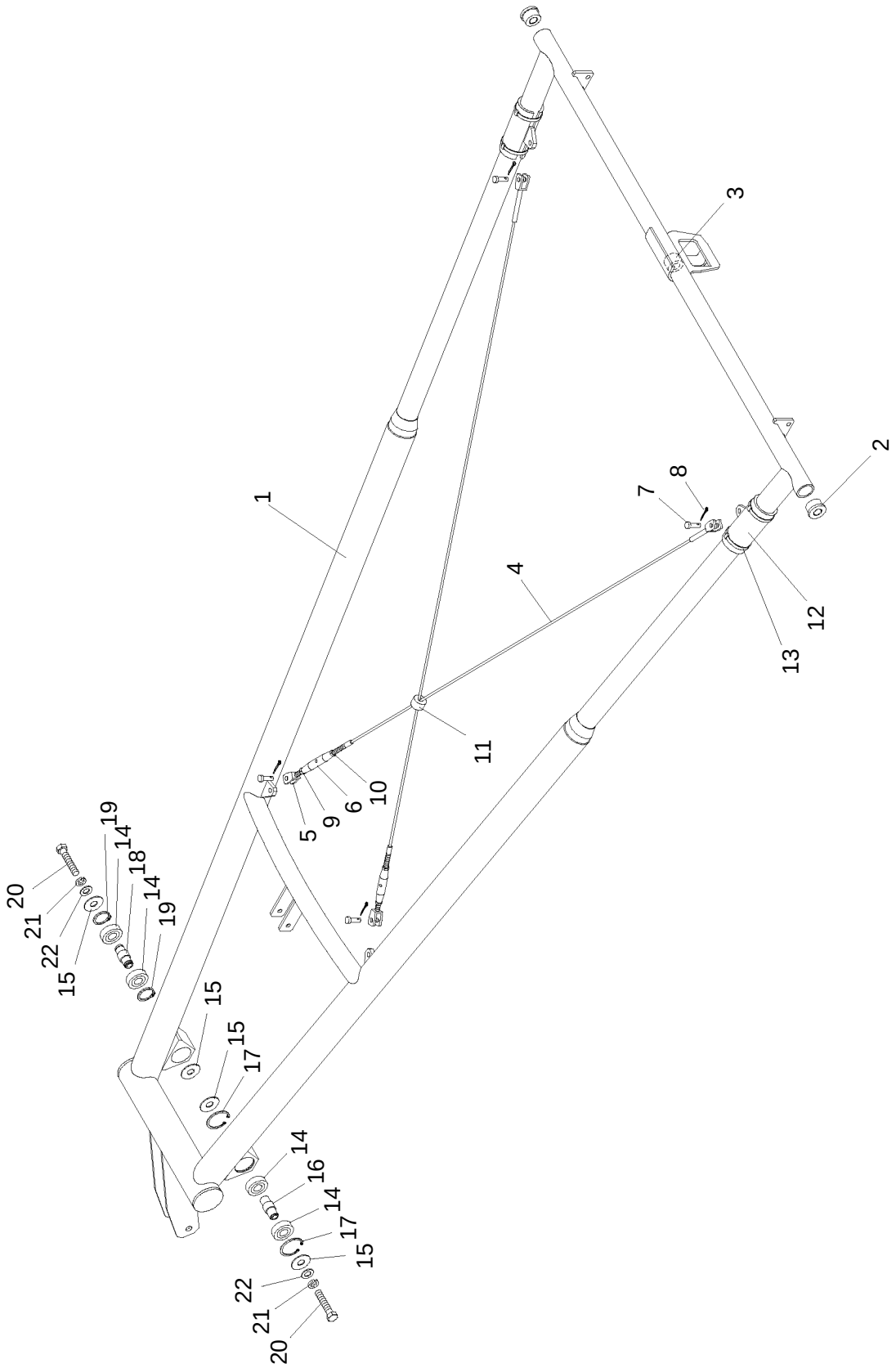

Figure 8.0-4: Upper Frame Assembly

Section-Figure-Index	QTY	Description 1 2 3 4 5
8.0-4-		Upper Frame Assembly
8.0-4-1	1	• Upper Frame
8.0-4-2	2	• Bushing
8.0-4-3	1	• Bushing
8.0-4-	2	• Diagonal Cable
8.0-4-4	1	• • Cable Assembly
8.0-4-5	1	• • Yoke
8.0-4-6	1	• • Turnbuckle
8.0-4-7	2	• • Clevis Pin
8.0-4-8	2	• • Pin, Cotter
8.0-4-9	1	• • Nut, Hex
8.0-4-10	1	• • Nut, Hex, Left Hand
8.0-4-11	1	• Protector
8.0-4-12	2	• Protector
8.0-4-13	1	• Cable Tie
8.0-4-		Upper Frame Bearing Assembly
8.0-4-14	4	• Bearing
8.0-4-15	4	• Washer, Special
8.0-4-16	1	• Bearing Shaft, Fixed
8.0-4-17	2	• Retaining Ring, Internal
8.0-4-18	1	• Bearing Shaft, Floating
8.0-4-19	2	• Retaining Ring
8.0-4-20	2	• Screw, Hex Cap
8.0-4-21	2	• Washer, Lock
8.0-4-22	2	• Washer

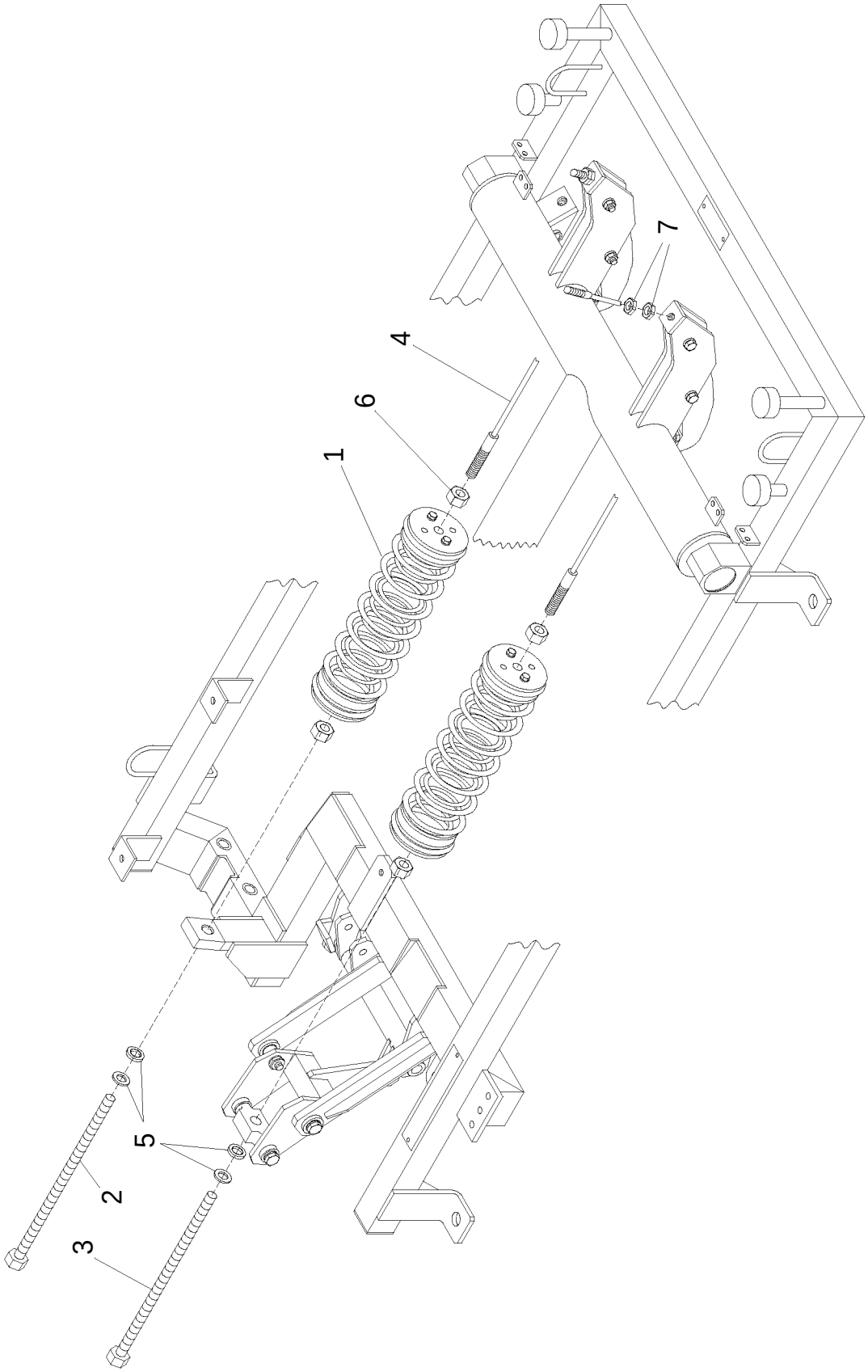

Figure 8.0-5: Raising Mechanism

Section-Figure-Index	QTY	Description 1 2 3 4 5
8.0-5-		Raising Mechanism
8.0-5-1	1	• Spring Assembly (See Figure 8.0-6)
8.0-5-2	1	• Bolt
8.0-5-3	1	• Bolt
8.0-5-4	2	• Cable
8.0-5-5	2	• Spherical Washer Set
8.0-5-6	4	• Nut, Hex
8.0-5-7	4	• Nut, Hex

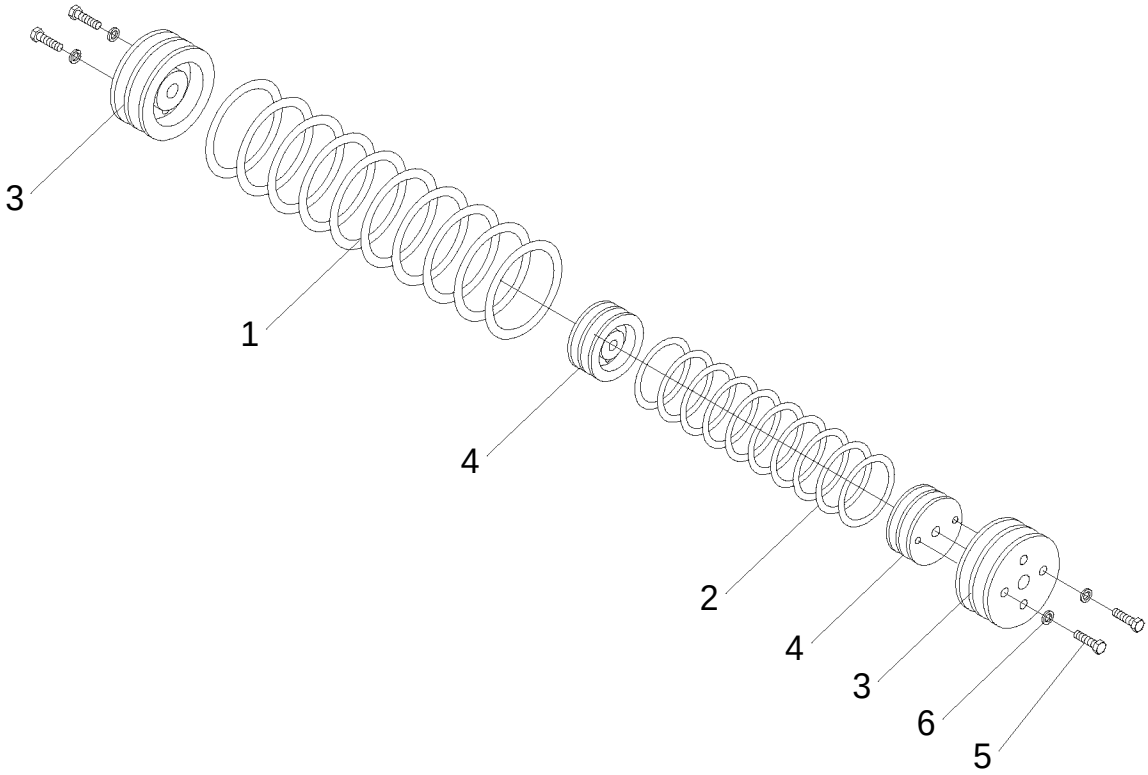

Figure 8.0-6: Spring Assembly

Section-Figure-Index	QTY	Description 1 2 3 4 5
8.0-6-		Spring Assembly
8.0-6-1	1	• Spring, Large
8.0-6-2	1	• Spring, Small
8.0-6-3	2	• Cap, Large
8.0-6-4	2	• Cap, Small
8.0-6-5	4	• Screw, Hex Cap
8.0-6-6	4	• Washer, Conical Spring

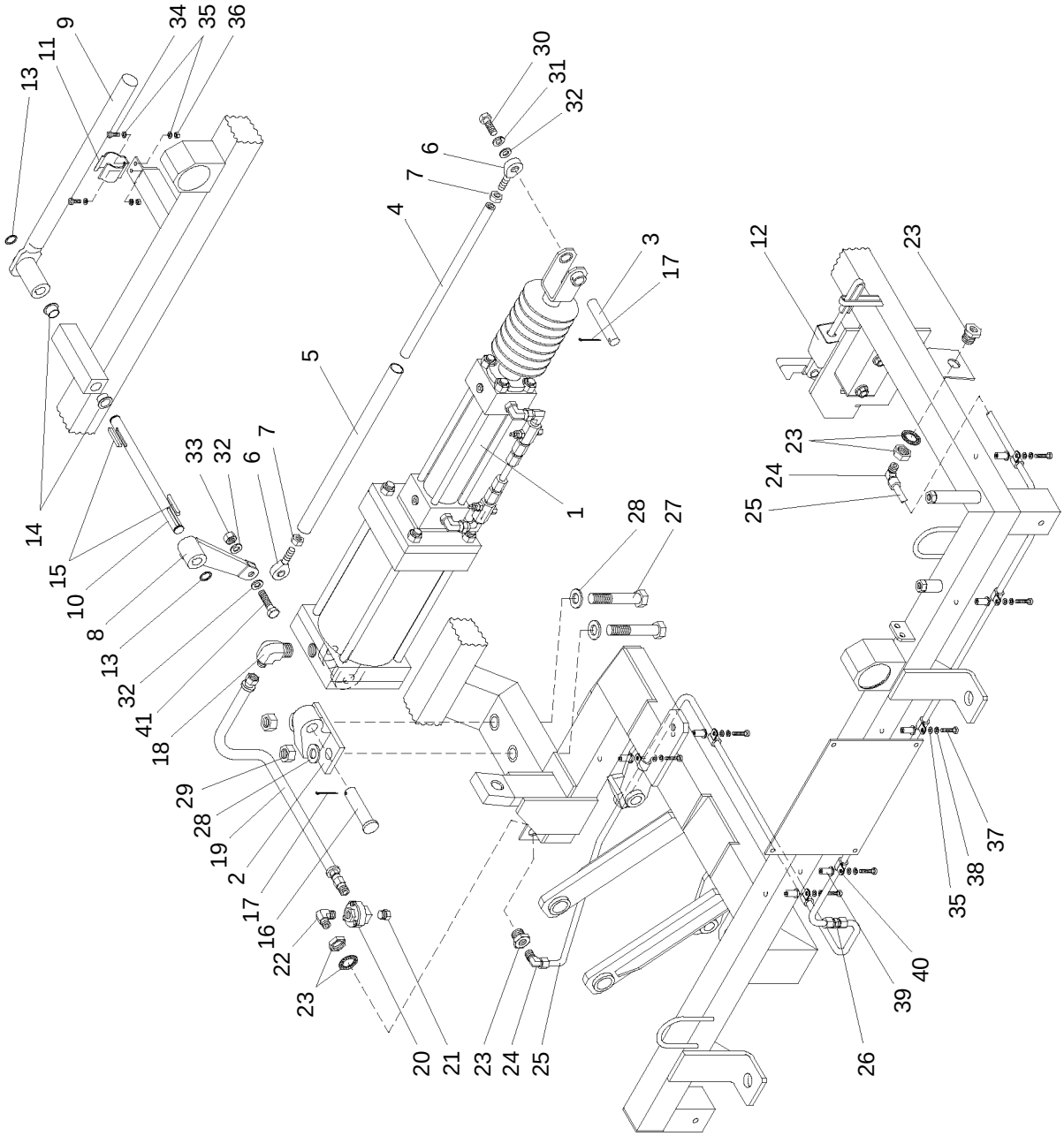

Figure 8.0-7: Pneumatic System

Section-Figure-Index	QTY	Description 1 2 3 4 5
8.0-7-		Pneumatic System
8.0-7-1	1	• Air Cylinder Assembly (See Figure 8.0-8)
8.0-7-2	1	• Pivot
8.0-7-3	1	• Shaft
8.0-7-	1	• Tie Rod
8.0-7-4	1	• • Rod
8.0-7-5	1	• • Tube
8.0-7-6	2	• • Rod End
8.0-7-7	1	• • Nut, Hex
8.0-7-8	1	• Lever
8.0-7-9	1	• Handle
8.0-7-10	1	• Shaft
8.0-7-11	1	• Clamp
8.0-7-12	1	• Latch Assembly (See Figure 8.0-11)
8.0-7-13	2	• Retaining Ring, External
8.0-7-14	2	• Flange Bushing
8.0-7-15	2	• Key
8.0-7-16	1	• Clevis Pin
8.0-7-17	2	• Cotter Pin
8.0-7-18	1	• Elbow, Male 90°
8.0-7-19	1	• Hose Assembly
8.0-7-20	1	• Quick Exhaust Valve
8.0-7-21	1	• Breather
8.0-7-22	1	• Elbow, Male
8.0-7-23	2	• Anchor Coupling
8.0-7-24	2	• Elbow, Male
8.0-7-25	N/A	• Tubing, Copper
8.0-7-26	1	• Union
8.0-7-27	2	• Bolt
8.0-7-28	4	• Washer
8.0-7-29	2	• Nut, Nylon Lock
8.0-7-30	1	• Screw, Hex Cap
8.0-7-31	1	• Washer, Lock
8.0-7-32	3	• Washer
8.0-7-33	1	• Nut, Nylon Lock
8.0-7-34	2	• Screw, Phillips Pan Head
8.0-7-35	11	• Washer

Section-Figure-Index	QTY	Description 1 2 3 4 5
8.0-7-36	2	• Nut, Nylon Lock
8.0-7-37	7	• Screw, Phillips Pan Head
8.0-7-38	7	• Washer, Lock
8.0-7-39	7	• Well Nut
8.0-7-40	7	• Clamp, Cushioned
8.0-7-41	1	• Screw, Hex Cap

This page intentionally left blank

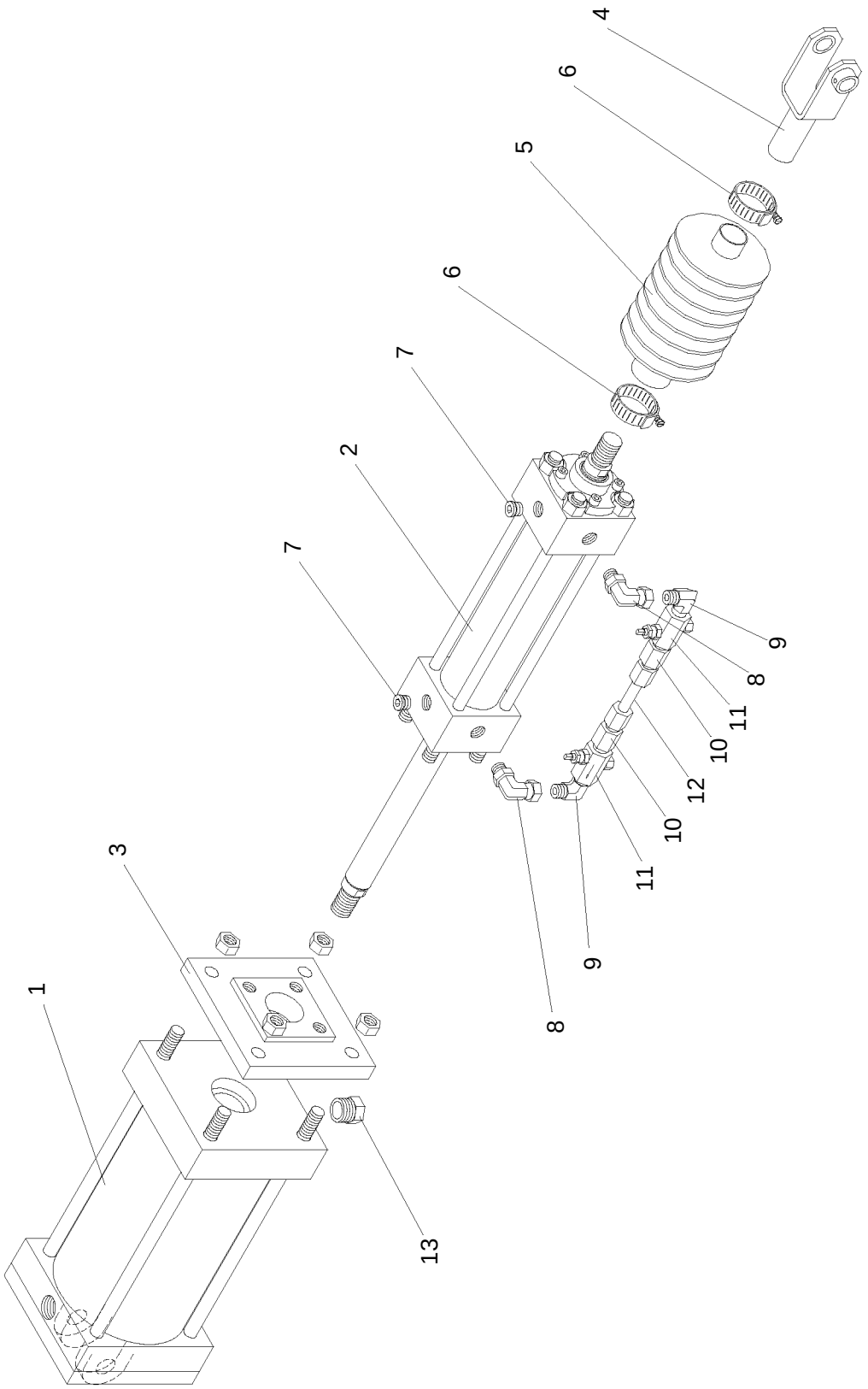

Figure 8.0-8: Air Cylinder Assembly

Section-Figure-Index	QTY	Description 1 2 3 4 5
8.0-8-		Air Cylinder Assembly
8.0-8-1	1	• Air Cylinder (See Figure 8.0-9)
8.0-8-2	1	• Hydraulic Cylinder (See Figure 8.0-10)
8.0-8-3	1	• Adapter Plate
8.0-8-4	1	• Clevis
8.0-8-5	1	• Bellows
8.0-8-6	1	• Hose Clamp
8.0-8-7	2	• Plug, Hollow Hex2
8.0-8-8	2	• Elbow, 90°
8.0-8-9	2	• Elbow, 90°
8.0-8-10	2	• Female Connector
8.0-8-11	2	• Flow Control Valve
8.0-8-12	N/A	• Tube, Steel

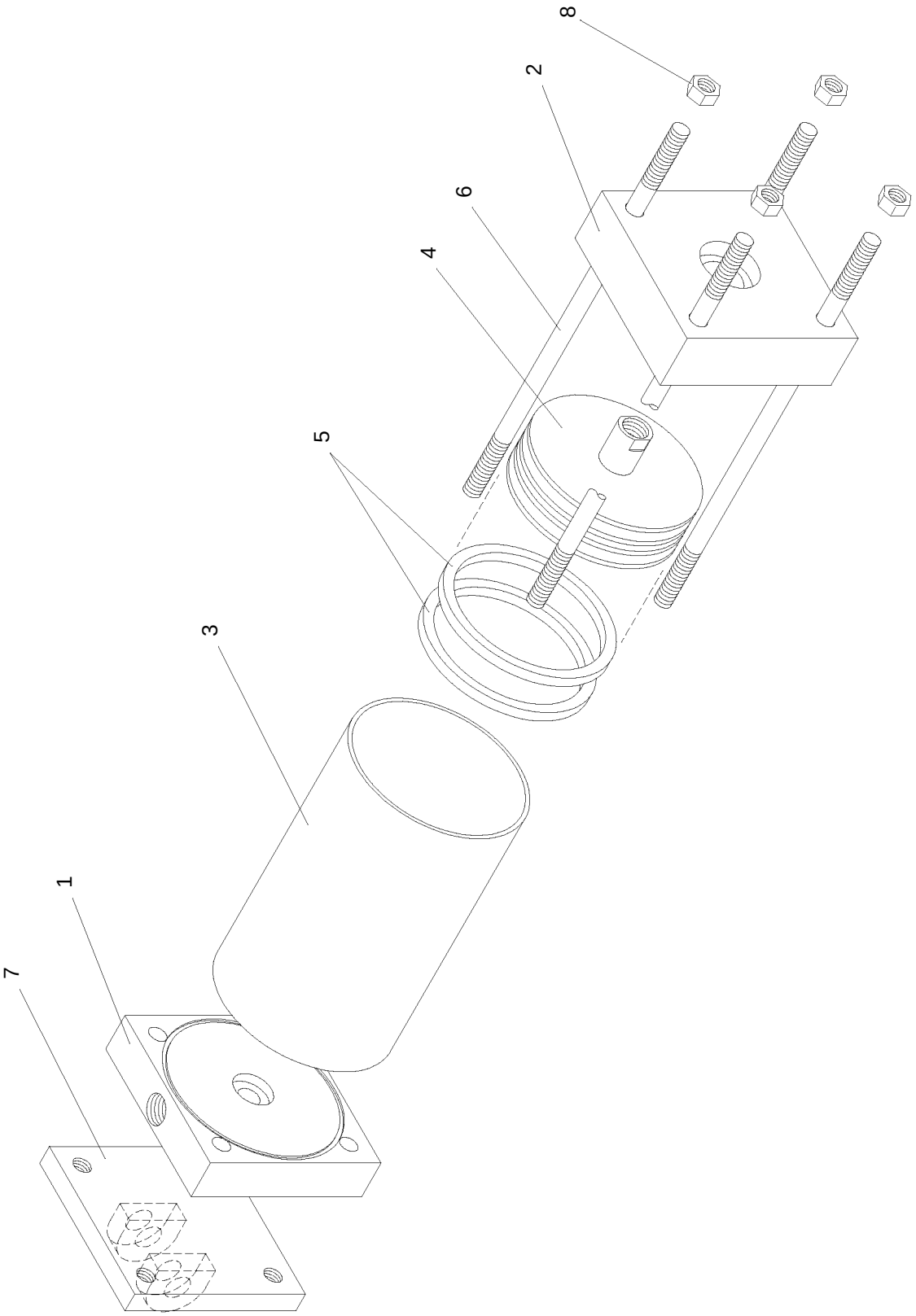

Figure 8.0-9: Air Cylinder

Section-Figure-Index	QTY	Description 1 2 3 4 5
8.0-9-		Air Cylinder
8.0-9-1	1	• Cap
8.0-9-2	1	• Head
8.0-9-3	1	• Tube
8.0-9-4	1	• Piston
8.0-9-5	1	• Piston Seal
8.0-9-6	4	• Tie Rod
8.0-9-7	1	• Mount
8.0-9-8	4	• Nut, Hex

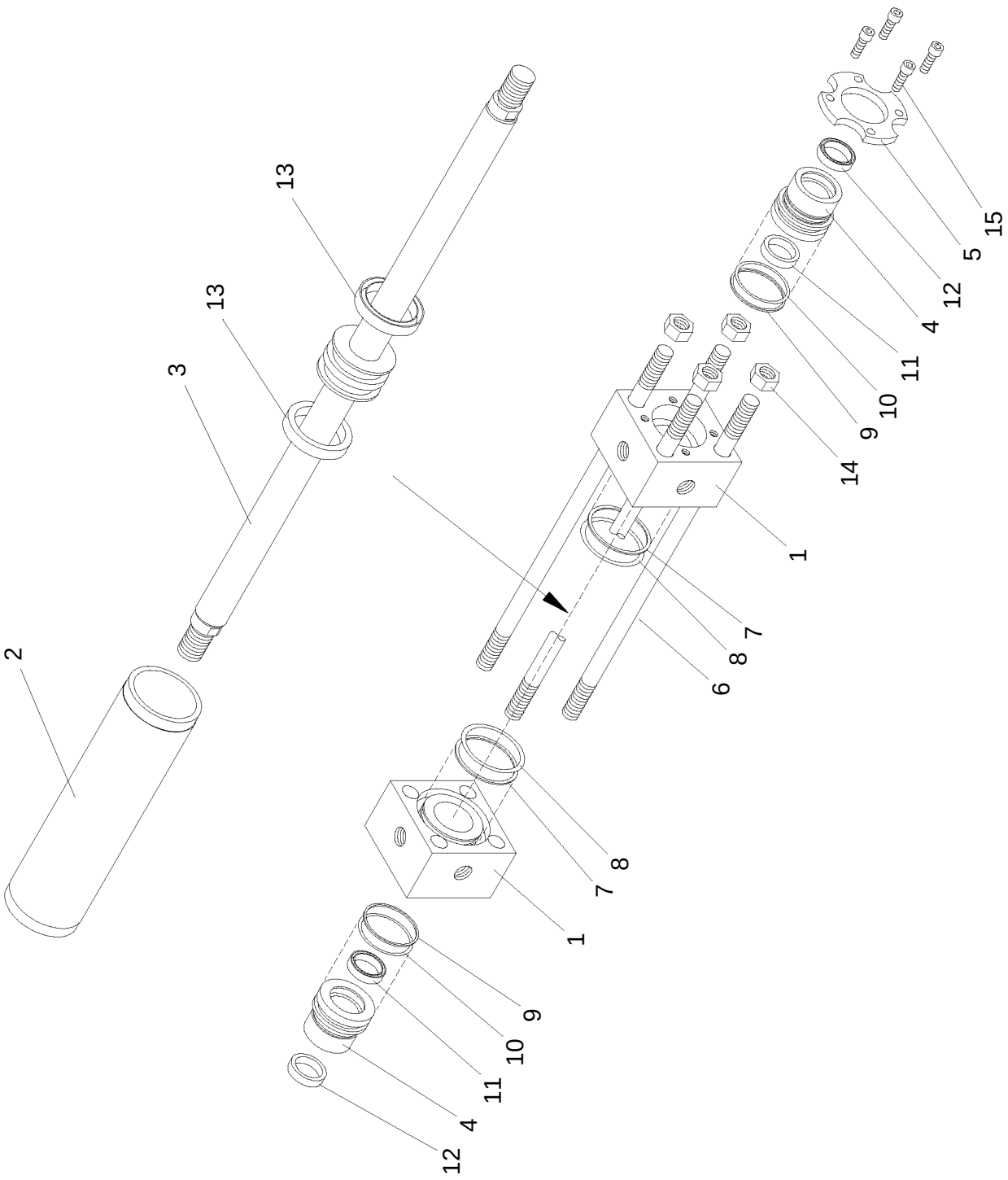

Figure 8.0-10: Hydraulic Cylinder

Section-Figure-Index	QTY	Description 1 2 3 4 5
8.0-10-		Hydraulic Cylinder
8.0-10-1	2	• Head
8.0-10-2	1	• Tube
8.0-10-3	1	• Piston
8.0-10-4	2	• Rod Gland Cartridge
8.0-10-5	1	• Retainer Plate
8.0-10-6	4	• Tie Rod
8.0-10-7	2	• Backup Ring
8.0-10-8	2	• O-Ring
8.0-10-9	2	• Backup Ring
8.0-10-10	2	• O-Ring
8.0-10-11	2	• Shaft Seal
8.0-10-12	2	• Rod Wiper
8.0-10-13	2	• Piston Seal
8.0-10-14	4	• Nut, Hex
8.0-10-15	4	• Screw, Socket Head Cap

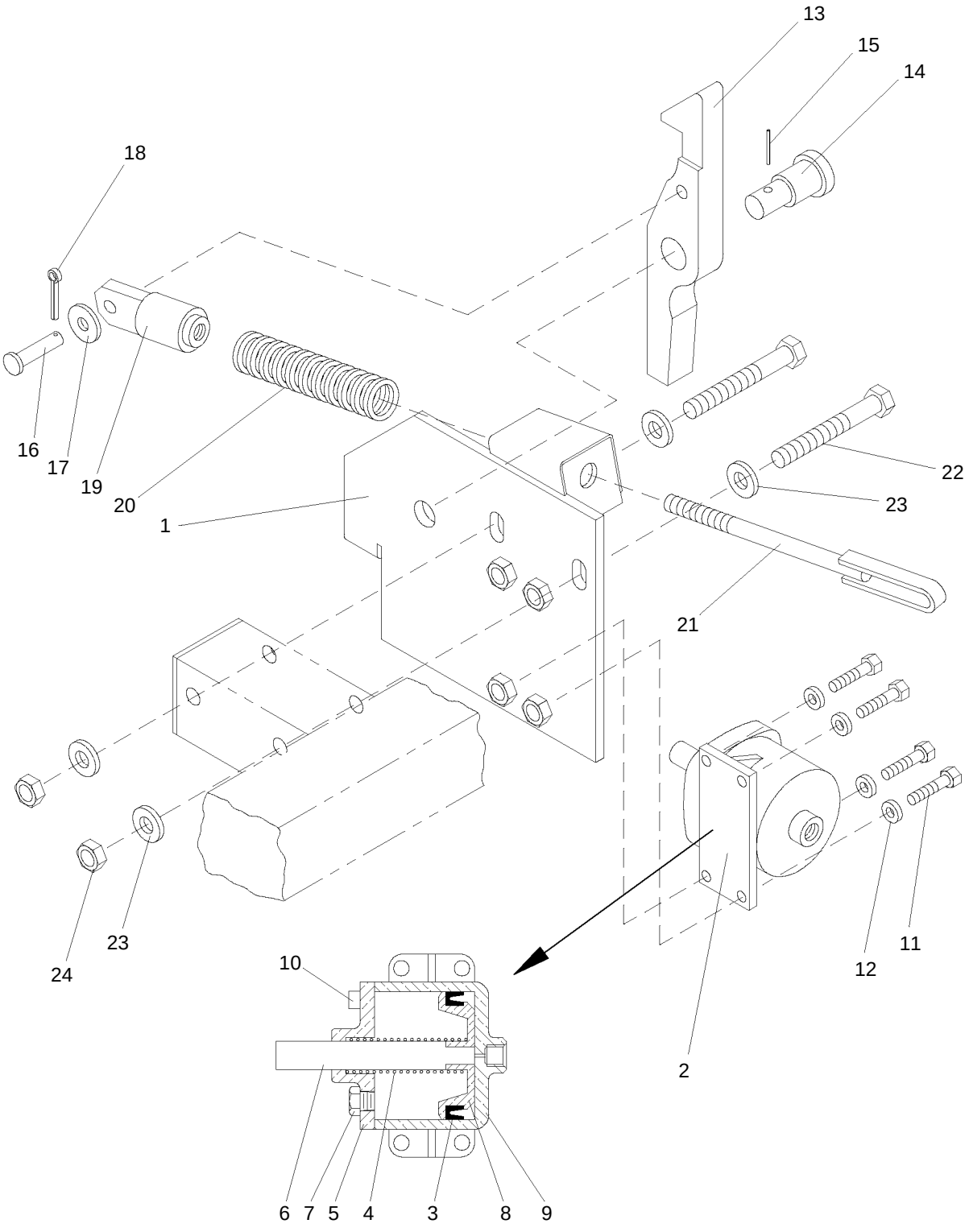

Figure 8.0-11: Latch Assembly

Section-Figure-Index	QTY	Description 1 2 3 4 5
8.0-11-		Latch Assembly
8.0-11-1	1	• Plate
8.0-11-2	1	• Air Cylinder
8.0-11-3	1	• • Piston Cup
8.0-11-4	1	• • Spring
8.0-11-5	1	• • Cover
8.0-11-6	1	• • Rod
8.0-11-7	1	• • Breather
8.0-11-8	1	• • Piston
8.0-11-9	1	• • Housing
8.0-11-10	1	• • Screw
8.0-11-11	4	• Screw, Hex Cap
8.0-11-12	4	• Washer
8.0-11-13	1	• Latch
8.0-11-14	1	• Pin
8.0-11-15	1	• Pin, Spring
8.0-11-16	1	• Pin
8.0-11-17	1	• Washer
8.0-11-18	1	• Pin, Cotter
8.0-11-19	1	• Latch Link
8.0-11-20	1	• Spring
8.0-11-21	1	• Lever Link
8.0-11-22	2	• Screw, Hex Cap
8.0-11-23	4	• Washer
8.0-11-24	2	• Nut, Nylon Lock

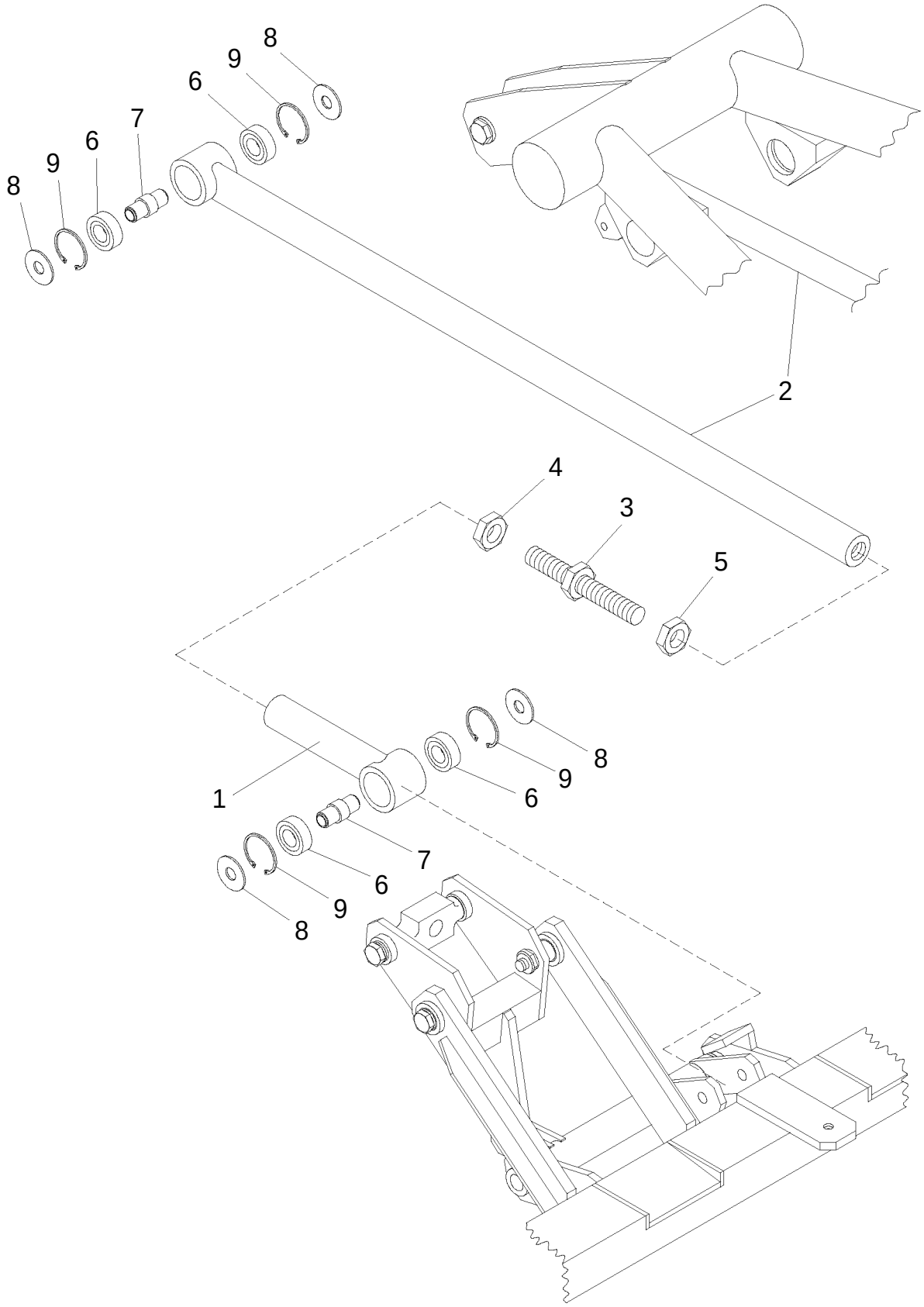

Figure 8.0-12: Coupling Rod

Section-Figure-Index	QTY	Description 1 2 3 4 5
8.0-12-		Coupling Rod
8.0-12-1	1	• Short End
8.0-12-2	1	• Long End
8.0-12-3	1	• Turnbuckle
8.0-12-4	1	• Nut, Hex, Left Hand
8.0-12-5	1	• Nut, Hex
8.0-12-6	4	• Bearing
8.0-12-7	2	• Bearing Shaft
8.0-12-8	4	• Washer, Special
8.0-12-9	4	• Retaining Ring, Internal

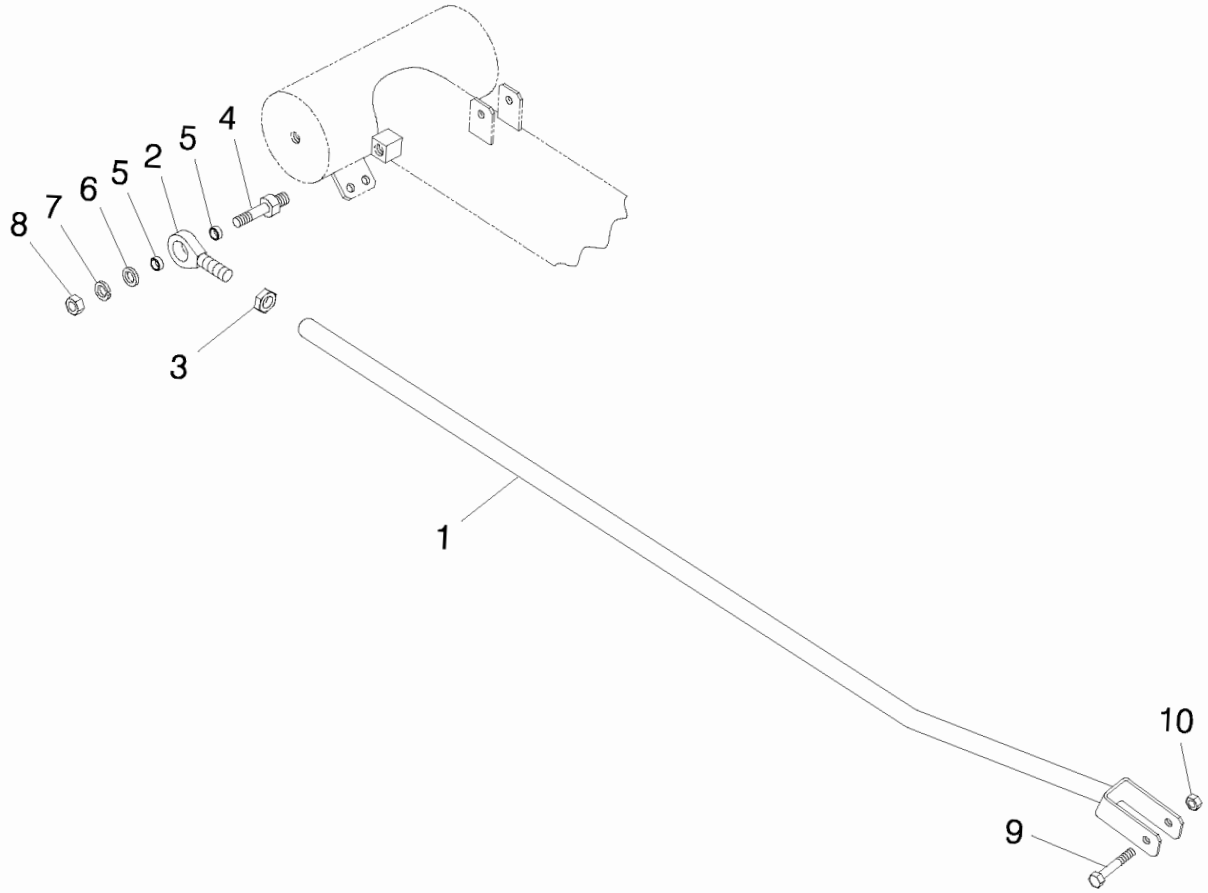

Figure 8.0-13: Pan Guide Assembly

Section-Figure-Index	QTY	Description 1 2 3 4 5
8.0-13-		Pan Guide Assembly
8.0-13-1	1	• Pan Guide
8.0-13-2	1	• Rod End
8.0-13-3	1	• Nut, Hex
8.0-13-4	1	• Bolt
8.0-13-5	2	• Socket
8.0-13-6	1	• Washer
8.0-13-7	1	• Washer, Lock
8.0-13-8	1	• Nut, Nylon Lock
8.0-13-9	1	• Screw, Hex Cap
8.0-13-10	1	• Nut, Nylon Lock

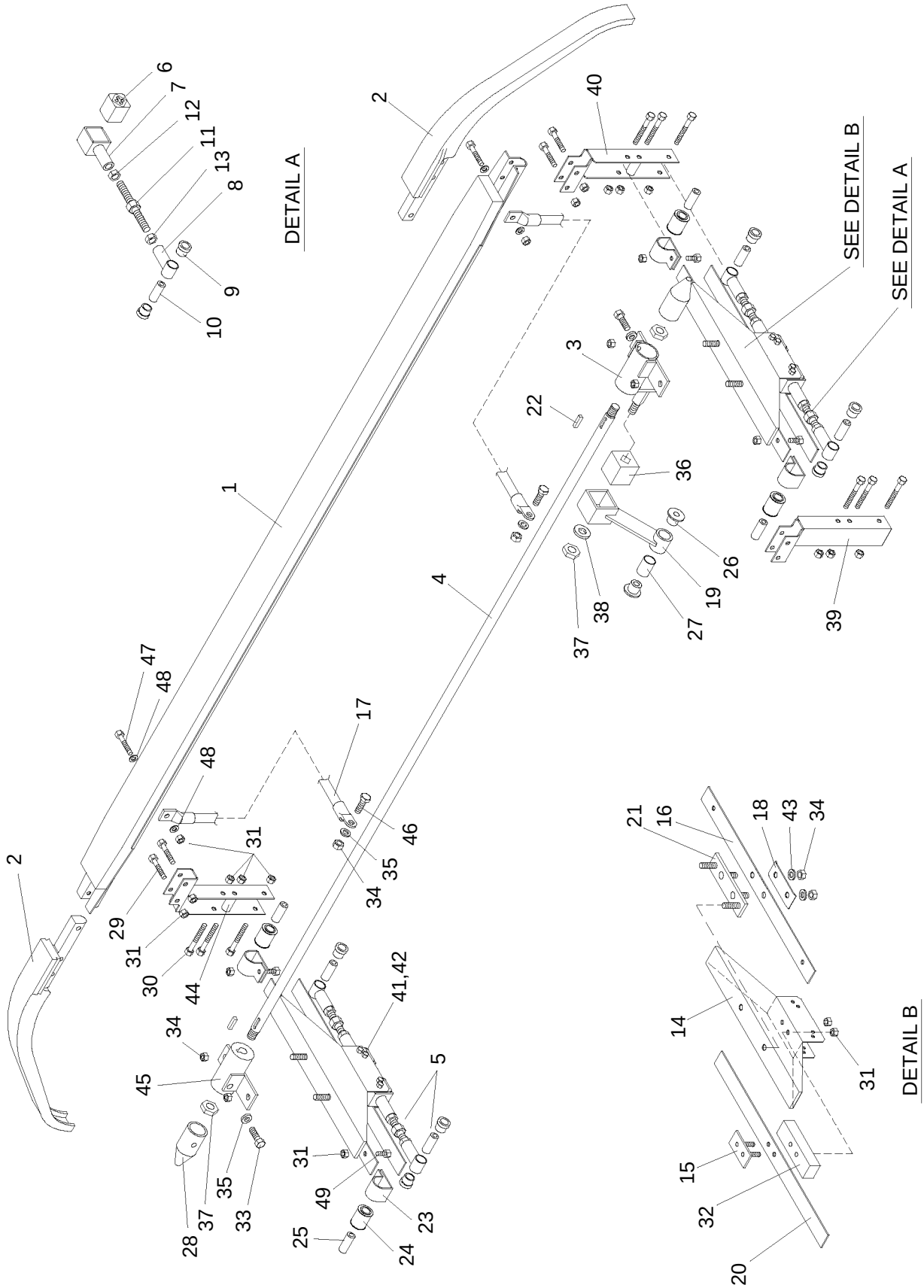

Figure 8.0-14: Pan Head

Section-Figure-Index	QTY	Description 1 2 3 4 5
8.0-14-		Pan Head
8.0-14-1	2	• Carbon Strip
8.0-14-2	4	• Horn
8.0-14-3	1	• Rocker Suspension
8.0-14-4	1	• Spindle
8.0-14-5	4	• Guiding Unit
8.0-14-6	1	• • Silent Block
8.0-14-7	1	• • Guiding Unit
8.0-14-8	1	• • Eye Bolt
8.0-14-9	2	• • Flange Bushing
8.0-14-10	1	• • Shaft
8.0-14-11	1	• • Turnbuckle
8.0-14-12	1	• • Nut, Hex
8.0-14-13	1	• • Nut, Hex, Left Hand
8.0-14-14	2	• Rocker Box
8.0-14-15	2	• Mounting Plate
8.0-14-16	2	• Flat Spring
8.0-14-17	4	• Shunt
8.0-14-18	2	• Underlying Spring
8.0-14-19	1	• Guiding Piece
8.0-14-20	2	• Limiting Spring
8.0-14-21	2	• Connecting Plate
8.0-14-22	2	• Shaft Key
8.0-14-23	4	• Clamp
8.0-14-24	4	• Bushing
8.0-14-25	4	• Axle
8.0-14-26	2	• Flange Bushing
8.0-14-27	1	• Bushing
8.0-14-28	2	• Stopper Plug
8.0-14-29	8	• Screw, Hex Cap
8.0-14-30	12	• Screw, Hex Cap
8.0-14-31	32	• Nut, Nylon Lock
8.0-14-32	2	• Intermediate Plate
8.0-14-33	2	• Screw, Hex Cap
8.0-14-34	12	• Nut, Nylon Lock
8.0-14-35	6	• Washer, Spring
8.0-14-36	1	• Silent Block
8.0-14-37	3	• Nut, Nylon Lock
8.0-14-38	1	• Washer, Spring

Section-Figure-Index	QTY	Description 1 2 3 4 5
8.0-14-39	2	• Rocker Holding Fixture
8.0-14-40	2	• Rocker Holding Fixture
8.0-14-41	8	• Screw, Hex Cap
8.0-14-42	8	• Nut, Nylon Lock
8.0-14-43	4	• Washer
8.0-14-44	4	• Bushing
8.0-14-45	1	• Rocker Suspension
8.0-14-46	4	• Screw, Hex Cap
8.0-14-47	4	• Screw, Hex Cap
8.0-14-48	8	• Washer
8.0-14-49	4	• Screw, Hex Cap

This page intentionally left blank

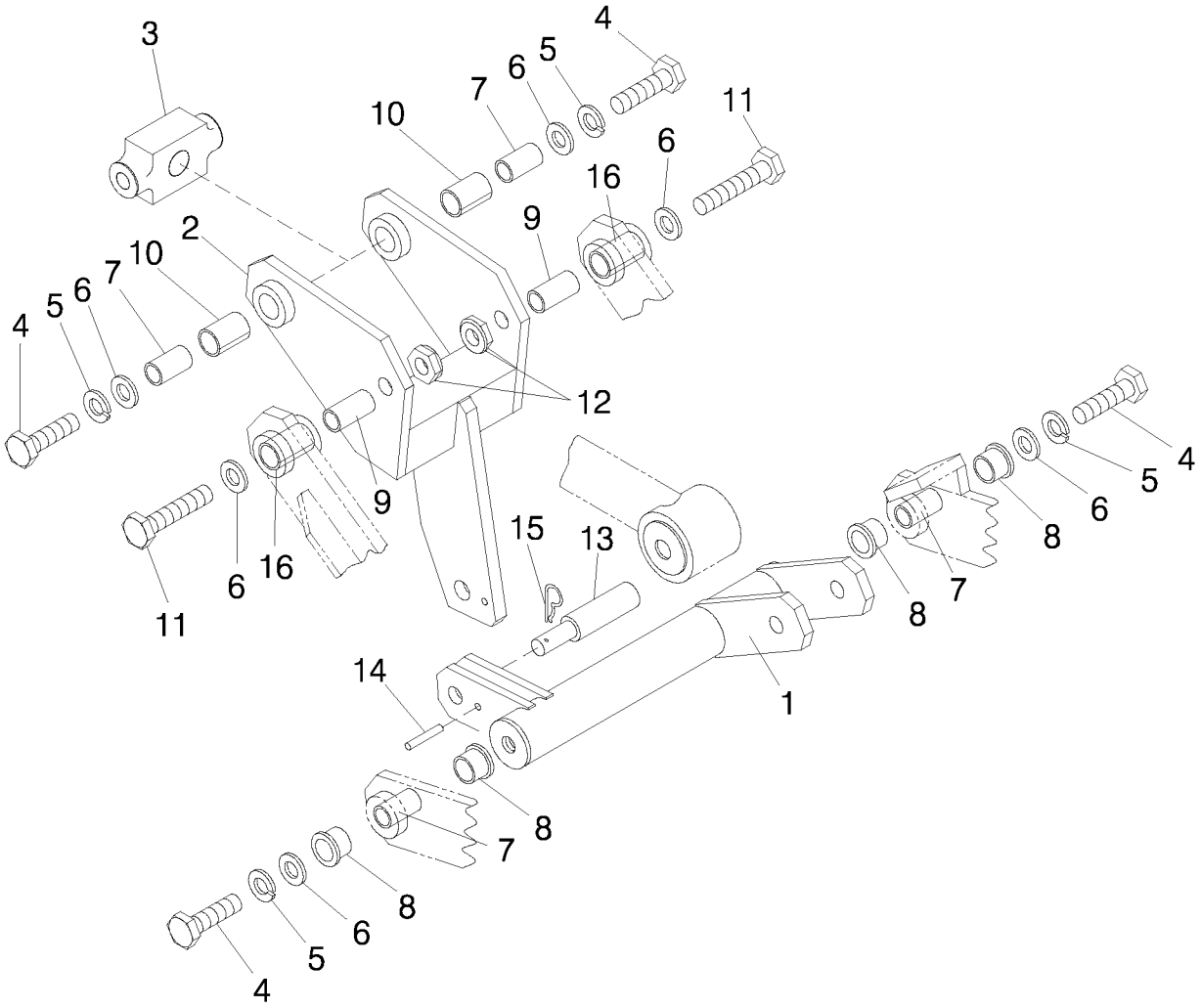

Figure 8.0-15: Safety System

Section-Figure-Index	QTY	Description 1 2 3 4 5
8.0-15-		Safety System
8.0-15-1	1	• Spindle
8.0-15-2	1	• Lever
8.0-15-3	1	• Trestle Block
8.0-15-4	4	• Screw, Hex Cap
8.0-15-5	4	• Washer, Lock
8.0-15-6	6	• Washer, Flat
8.0-15-7	4	• Shaft
8.0-15-8	4	• Bushing
8.0-15-9	2	• Shaft
8.0-15-10	2	• Bushing
8.0-15-11	2	• Screw, Hex Cap
8.0-15-12	2	• Nut, Nylon Lock
8.0-15-13	1	• Safety Pin
8.0-15-14	1	• Shear Pin
8.0-15-15	1	• Pin, Spring Cotter
8.0-15-16	2	• Bushing

8.1 Removal From Vehicle

1. Disconnect the air connections from the pantograph.

2. Disconnect the vehicle main power cables from the high voltage tap on the pantograph base frame.

3. Secure the latch down hook to the latch keeper on the upper frame with wire or rope to prevent accidental raising during lifting or moving.

4. Remove the pantograph mounting bolts from the insulators.

5. Lift the pantograph using the lifting lugs located on the base frame.

8.2 Disassembly

The pantograph should be completely disassembled and cleaned. Any components that are rusty or have poor paint coverage should primed and repainted. Prior to painting clean off all loose rust or paint with a pressure washer or by sand blasting. If sand blasting, mask off all machined surfaces.

Complete disassembly can be accomplished by one person with the help of a second person or overhead crane to lift the larger assemblies. Disassembly should begin with the pan head, and continue to the upper frame, lower frame, and base frame.

WARNING

Remove raising springs before disassembling any parts. Failure to do so could cause injury. The spanner wrench(351-05990) must always be used to prevent fingers from being pinched in the coils of the raising springs.

1. Back off spring tension bolts (2 & 3), using spanner wrench(351-05990) to prevent springs from rotating. Place supports under the springs to prevent them from dropping when bolts are removed. (Figure 8.0-5)

2. Remove the end horns(2) and contact strips(1) from the pan head. (Figure 8.0-14)

a. Remove pan guide from guiding piece(19).

b. Remove screws(33), stopper plugs(28), and locknuts(37) from rocker suspensions(3 & 45).

c. Slide the pan suspension assemblies off of the spindle(4).

3. Remove damper(9). (Figure 8.0-1)

4. Remove bolts(20) from the bearing assemblies. Disconnect shunts and coupling rod then remove upper frame from pantograph. (Figure 8.0-4)

a. Remove internal retaining rings(17) from the fixed bearing block.

b. Remove both bearing assemblies using a proper sized bearing extractor that only presses onto the bearings outer ring. **Pressing on the inner ring or seal of the bearing could cause damage.**

4. Place supports under the air cylinder assembly(1). Remove cotter pin(17), screw(30), and shaft(3). (Figure 8.0-7)

a. Disconnect hose(19) from air cylinder assembly(1).

b. Remove locknuts(29) and bolts (27) and remove air cylinder assembly(1).

c. See section 8.2.1 for disassembly of air cylinder assembly.

5. Disconnect air line to latch assembly air cylinder(2). (Figure 8.0-11)

a. Remove locknuts(24) and screws(22) and remove latch assembly.

6. Place supports under the lower frame to prevent it from dropping. (Figure 8.0-2)

a. Remove bolts(10) from the bearing assemblies. Disconnect shunts and remove lower frame from pantograph.

b. Remove internal retaining rings(8) from the fixed bearing block.

c. Remove both bearing assemblies using a proper sized bearing extractor that only presses onto the bearings outer ring. **Pressing on the inner ring or seal of the bearing could cause damage.**

7. Disassemble all parts and thoroughly clean. After parts are clean inspect carefully for signs of damage, cracks, stress, bending, etc. Repair minor damage if possible, otherwise replace damaged parts with new ones.

8. Inspect all bushings, axles, and shafts for wear or damage and replace if necessary. If wear or damage is questionable replace with new parts. Carefully check all ball bearings for rough rotation, damage, or leaking seals. If the condition of a bearing is questionable replace it with a new one.

9. Inspect all shunts for breaks or severe corrosion. Replace if necessary.

8.2.1 Disassembly of Air Cylinder Assembly

1. Remove nuts(8) from tie rods. (Figure 8.0-9)

2. Separate adapter plate(3) from air cylinder. (Figure 8.0-8)

3. The pistons of the air cylinder and the hydraulic cylinder are screwed together. Separate them by turning on the flats provided on the piston rods. **Do not clamp on the piston rods. Doing so will create nicks in the piston rods and cause damage to the seals.**

4. Remove clevis(4) and bellows(5) from hydraulic cylinder(2). (Figure 8.0-8)

5. Remove plugs(7) and drain hydraulic oil from the hydraulic cylinder(2). (Figure 8.0-8)

6. Loosen swivels on fittings(8) and remove fitting assembly. (Figure 8.0-8)

7. Remove screws(15) and retainer plate(5) from cylinder head(1). (Figure 8.0-10)

a. Remove nuts(14) from tie rods.

b. Separate heads(1) from tube(2).

c. Remove rod gland cartridges(4) from heads(1) by pushing on them from inside the heads.

d. Slide piston out from tube(2).

8. Remove and inspect all seals and o-rings. Replace any that are found to be cut, cracked, or hard. If their condition is questionable replace with new ones. If it has been several years since last overhaul it may be best to replace all seals and o-rings with new ones to insure long service life.

9. Wash all parts thoroughly using mild detergent to remove oil, grease, and dirt residue.

8.3 Assembly

NOTE: Most hardware on the pantograph is stainless steel. Do not use an impact wrench on any fasteners. Stainless steel fasteners tend to seize while being assembled, especially if an impact wrench is used. Use a light coat of Top 2000 grease on all threads to reduce the risk of seizing. This will also help prevent stainless steel fasteners that are threaded into carbon steel from rusting fast.

Table 8.3-1: Torque Chart

	M1.6	M2	M2.5	M3	M4	M5	M6	M8	M10	M12	M14	M16	M18	M20	M22	M24	M27
Nm	0.1	0.2	0.45	1	1.7	3.4	5.9	14.9	30	50	79	101	140	176	195	223	308
Ft.Lb	0.1	0.15	0.35	0.75	1.25	2.5	4.35	11	22	37	58	74	104	130	144	164	227
	#4	#6	#8	#10	1/4	5/16	3/8	7/16	1/2	9/16	5/8	3/4	7/8	1"	1-1/4		
In.Lb	8	12	21	30													
Ft.Lb					5	11	18	28	39	51	83	105	160	235	250		

1. Securely bolt the base frame to a table or pallet using the holes in the mounting feet.

2. Completely pack the space between each of the base frame bearing assemblies with Top 2000 grease.

a. Install the bearings into their proper bearing blocks, making sure the fixed bearing

assembly is in the fixed bearing block. (Refer to Figure 5.1-1) Use a proper sized bearing driver that only presses onto the bearings outer ring. **Pressing on the inner ring or seal of the bearing could cause damage.** The floating bearing assembly should be flush, or slightly inside, of its bearing housing. When tightening the bearing mounting bolts it will pull into place.

3. Install rubber bumpers onto base frame.

4. Mount cams(10) and lever(2) assembly to lower frame(1). Do not tighten cam mounting locknuts(13) completely. The cams will need to pivot later when adjusting the static force. (Figure 8.0-3)

a. Set the cam adjustment screws(8) to equal lengths.

5. The large washers(7) on each end of the bearing assemblies fit snugly into a groove on the bearing shafts. Applying grease to the groove helps the washers stay in place during assembly. (Figure 8.0-2)

a. Install lower frame to the base frame. Secure with bearing mounting screws(10).

6. Completely pack the space between each of the upper frame bearing assemblies with Top 2000 grease. (Figure 8.0-4)

a. Install the bearings into their proper bearing blocks, making sure the fixed bearing assembly is in the fixed bearing block. (Refer to Figure 5.1-1) Use a proper sized bearing driver that only presses onto the bearings outer ring. **Pressing on the inner ring or seal of the bearing could cause damage.** The floating bearing assembly should be flush, or slightly inside, of its bearing housing. When tightening the bearing mounting bolts it will pull into place.

b. The large washers(15) on each end of the bearing assemblies fit snugly into a groove on the bearing shafts. Applying grease to the groove helps the washers stay in place during assembly.

c. Install upper frame to the lower frame. Secure with bearing mounting screws(20).

d. Slide protector(11) over cable assemblies(4).

e. Thread turnbuckles(6) and yokes(5) onto cable assemblies(4) making sure there is equal thread engagement between the yoke and cable assembly to allow adjustment.

f. Install straight bushing(3) into upper frame cross member using a long rod or tube. Make sure the rod or tube are considerably larger than the bore of the bushing, otherwise it will push against and damage the bore of the bushing.

g. Install flange bushings(2) to upper frame.

7. Completely pack the space between the coupling rod bearing assemblies with Top 2000 grease. (Figure 8.0-12)

a. Install the bearings into the coupling rod ends. Use a proper sized bearing driver that

only presses onto the bearings outer ring. **Pressing on the inner ring or seal of the bearing could cause damage.** Secure with internal retaining rings(9).

8. Assemble safety system. (Figure 8.0-15)

a. Apply a coat of Top 2000 grease to housing bores of bushings(8,10,&16). This will prevent rusting and rust bleed-out of the steel surfaces.

b. Apply a coat of Top 2000 grease to the bores of bushings(8,10,&16).

c. Install shafts(7 & 9).

d. Attach coupling rod short end(it. 1, Figure 8.0-12) to spindle(1) using locknut(it. 19, Figure 8.0-1) and screw(it. 20, Figure 8.0-1).

e. Attach spindle(1) to base frame.

f. Attach lever(2) to base frame.

g. Check for free rotation of spindle(1), lever(2), and trestle block(3). These items should rotate very freely.

f. Line up holes between the spindle(1) and lever(2) then lightly tap shear pin(14) into place. Install and keep safety pin(13) in place throughout assembly.

9. Assemble pan head. (Figure 8.0-14)

a. Assemble rocker box assemblies. (Refer to Detail B)

b. Install spindle(4) into upper frame cross member.

c. Apply a coat of Top 2000 grease to shaft key(22) and install into spindle(4)

d. Mount rocker suspensions(3 & 45) to spindle and secure with locknuts(37). Make sure that the rocker suspension(3) is on the same side as the pan guide.

e. Attach rocker box assemblies to rocker suspensions(3 & 45) and secure with locknuts(34).

f. Install guiding piece(19) to rocker suspension(3) making sure that its arm is facing towards the pantograph.

g. Apply electrical contact grease to u-channel of carbon strips(1).

h. Install horns(2) into carbon strips(1) and secure to rocker holding fixtures(39 & 40).

i. If necessary grind a smooth transition between the horns and carbon strips.

10. Attach pan guide to lower frame and pan head guiding piece. Apply removable loctite #242 on end of bolt(4) which threads into the lower frame. (Figure 8.0-13)

11. Attach the coupling rod long end(2) to the short end(1) already attached to the safety system. (Figure 8.0-12)

a. Apply Top 2000 grease to threads of the coupling rods.

b. Adjust turnbuckle(3) to have equal engagement with both coupling rod ends.

c. Attach coupling rod to upper frame.

12. Assemble raising springs to pantograph. (Figure 8.0-5)

a. Apply a coat of Top 2000 grease to the grooves of cams(it. 10, Figure 8.0-3).

b. Attach smaller threads of cables(4) to the lower frame and the larger ends to springs(1).

c. Generously apply Top 2000 grease to bolts (2 & 3).

d. Thread bolts(2 & 3) into springs(1) making sure longer bolt(3) is on safety system side. Properly support the springs, in line with the bolts, and thread in by hand.

CAUTION

Do not allow the bolts to support the weight of the springs until they are tensioned. Doing so could damage the threads and cause failure. Only turn the bolts by hand, using a wrench, or with an air ratchet at slow rotation. Do not use an impact gun. Doing so could damage to the threads and cause failure.

e. Tension springs by turning bolts(2 & 3). Secure springs from rotating using spanner wrench(351-05990). The bolts should be adjusted to equal lengths, several inches at a time, alternating between the two bolts.

f. Tighten jam nuts(6) after contact force is properly adjusted.

13. Assembly Pneumatic System. (Figure 8.0-7)

a. Assemble and mount the latch assembly(12) to the base frame. Adjust height to properly catch the keeper plate located on the upper frame then tighten locknuts(it. 24, Figure 8.0-11)

b. Assemble air cylinder assembly(1). (See Section 8.3.1)

c. Attach pivot(2) to air cylinder assembly(1) using clevis pin(16). Secure clevis pin with cotter pin(17).

d. Mount air cylinder assembly to base frame using screws(27), washers(28), and locknuts(29). Do not completely tighten, allowing slight movement of the pivot(2).

e. Attach clevis of air cylinder assembly to the lower frame lever(it. 2, Figure 8.0-3) using shaft(3). Make sure holes in the clevis and shaft are aligned and install cotter pin(17).

f. Tighten locknuts(29) on pivot(2).

g. Apply Top 2000 grease to handle bushing housing. Install flange bushings(14).

f. Apply Top 2000 grease to flange bushings(14) and install shaft(10) making sure keyways are aligned properly.

g. Apply Top 2000 grease to keys(15) and place into keyways.

h. Apply Top 2000 grease to bores of handle(9) and lever(8). Attach handle(9) and lever(8) to shaft(10). Check that the lever and handle are in the proper location. The handle should be horizontal and secured in clamp(11) and the lever should be facing away from the pantograph. Secure with retaining rings(13).

i. Assemble tie rod(4-7). Adjust rod ends(6) to align with mounting holes of lever(8) and shaft(3) **when the air cylinder assembly(1) is completely retracted.**

14. Install all shunts making sure they are routed properly and not rubbing anywhere. Apply electrical contact grease under all shunts. The spring washers must be between the locknuts and the shunts to insure good electrical contact.

15. Refer to Section 7.0 for adjustments.

8.3.1 Assembly of Air Cylinder Assembly

1. Assemble hydraulic cylinder. (Figure 8.0-10)

a. Attach piston seals(13) to piston(3).

b. Install backup rings(7) and o-rings(8) into heads(1).

c. Install o-rings(10), backup rings(9), shaft seals(11), and rod wipers(12) into rod gland cartridges(4).

d. Install piston(3) into tube(2). Carefully work the piston seal into the tube. A light coat of oil will help. **Do not use any sharp objects to force the seal into the tube. Doing so could damage the seals.**

e. Slide heads(1) over piston(3) and press onto tube(2).

f. Slide rod gland cartridges(4) over piston(3) and press into heads(1).

g. Install tie rods(6) through heads(1) and attach to adapter plate(it. 3, Figure 8.0-8). Gradually tighten nuts(14), alternating between them, to 43 ft-lbs wet torque.

h. Attach retainer plate(5) and secure with screws(15).

2. Assembly air cylinder. (Figure 8.0-9)

a. Slide head(2) over hydraulic cylinder piston.

b. Attach air cylinder piston(4) to hydraulic cylinder piston. Apply loctite #242 to threads. Tighten by turning on the flats provided on the piston rods. **Do not clamp on the piston rods. Doing so will create nicks in the pistons rod and cause damage to the seals.**

c. Attach piston seals(5) to piston(4). Both seals should face the same direction. The cylinder is only pressurized from the rear cap.

d. Install piston(4) into tube(3). Carefully work the piston seal into the tube. A light coat of oil will help. **Do not use any sharp objects to force the seal into the tube. Doing so could damage the seals.**

e. Attach cap(1) to tube(3).

f. Check that all ports are in their proper locations.

g. Thread tie rods(6) into mount(7).

h. Install tie rods(6) through cap(1), head(2), and adapter plate. Gradually tighten nuts(8), alternating between them.

3. Finish assembly. (Figure 8.0-8)

a. Attach elbows(8) to hydraulic cylinder(2).

b. Assembly elbows(9), flow control valves(11), and female connectors(10). Use loctite #592 on pipe threads.

c. Attach elbows(9) to elbows(8) and hand tighten.

d. Measure and cut tube(12) to proper length to fit snugly between the seats of the female connectors(10). De-burr inside and outside of tube.

e. Slip nuts and ferrules of female connectors(10) onto tube. Make sure the long, straight end of the ferrules points toward tube ends.

f. Lightly lubricate the threads and ferrules with oil.

g. Hand tighten nuts onto female connectors(10).

h. Tighten swivel fittings of elbows(8) making sure both fitting assemblies remain in line with each other.

i. Tighten nuts onto female connectors(10).

j. Fill hydraulic cylinder with Texaco Oil 5606G using ports located in top of hydraulic cylinder. Install and tighten plugs(7).

k. Open flow control valves(11) completely buy turning adjustment screws counterclockwise.

l. Cycle air cylinder assembly several times by applying air to front and rear ports of air cylinder(1).

m. Open plugs(7) and check level of oil. Top off if necessary.

n. Repeat steps (l) and (m) until no air is remaining in hydraulic cylinder.

o. Attach bellows(5) and clevis(4) to hydraulic cylinder. Apply loctite #242 to threads of clevis. Tighten by turning on the flats provided on the piston rod. **Do not clamp on the piston rod. Doing so will cause nicks in the pistons rod and cause damage to the seals.**

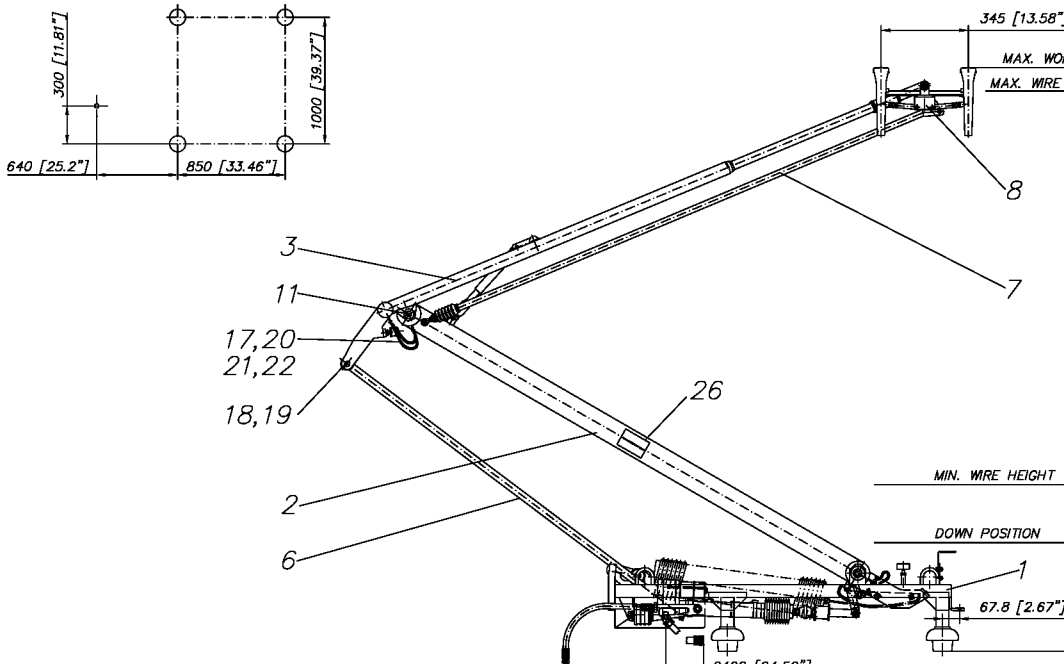

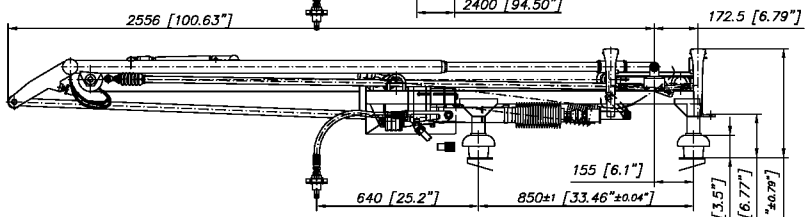

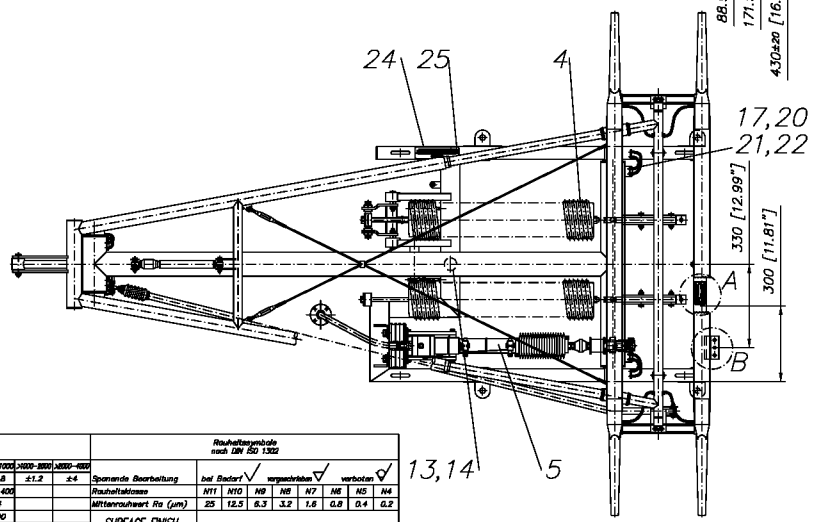

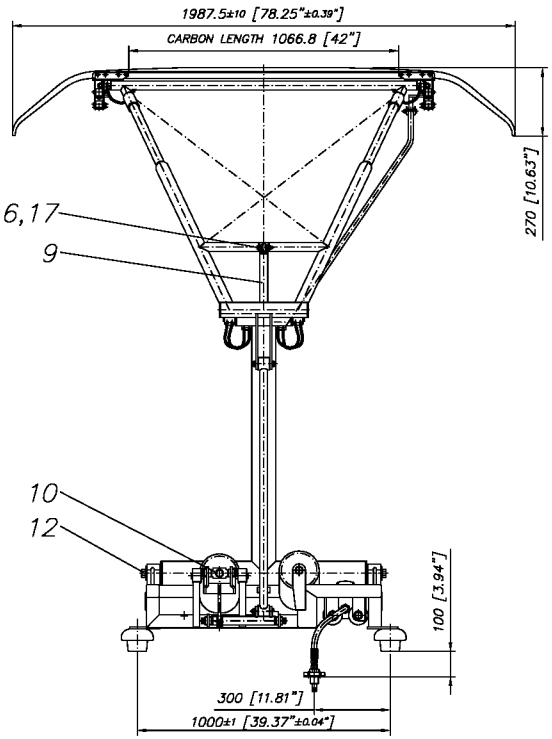

DETAIL A M1:3

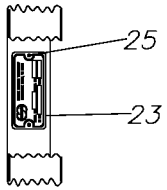

DETAIL B M1:3

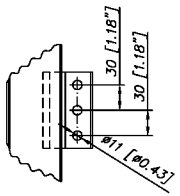

TECHNICAL DATA:

minimum voltage:	525VDC
rated voltage:	750VDC
peak voltage:	900VDC
rated current:	1800A
peak current:	2700A
nominal contact pressure:	80N
speed:	105 km/h (65mph)
weight:	237kg (523 lbs)
ambient temperature:	−30℃ − +60℃ (−22℉ − +140℉)
material of collector strips:	metal impregnated carbon
standards:	EN 50206−2

Current connection from base−frame to lower−frame, lower−frame to upper−frame and upper−frame to pan−head with four shunts in each case!

Use contact−grease for current connections!

Freimaßtoleranz nach DIN ISO 7168 mittel								
Längen−Maße	0.5−6	>6−30	>30−120	>120−400	>400−1000	>1000−2000	>2000−4000	
	±0.1	±0.2	±0.3	±0.5	±0.8	±1.2	±4	
Kanten−höhen Radien	0.5−3	>3−6	>6−30	>30−120	>120−400			
	±0.2	±0.5	±1	±2	±4			
Winkel tol. beim Kürz. Schenkel	−10	>10−50	>50−120	>120−400	>400			
	±1°	±0°30'	±0°20'	±0°10'	±0°5'			

Rauheitsangabe nach DIN ISO 1302								
Spanende Bearbeitung	bei Bedarf √		vorgeschrieben √			verboten √		
Rauheitsklasse	N11	N10	N9	N8	N7	N6	N5	N4
Mittenrauhwert Ra (µm)	25	12.5	6.3	3.2	1.6	0.8	0.4	0.2
SURFACE FINISH	---							

Die unbedeckte bzw. beschriftete Oberfläche Verwendung dieser Unterlagen ist nicht gestattet und wird gerichtlich verfolgt.

DARK GREY RAL7024

Verwendet für: WBR LACMTA

Masse ohne Toleranzangabe: DIN7168 mittel

Oberflächen DIN ISO 1302

A	151.75 WAS 141.57	08-23-05	OPC	
B	Various	07-06-06	JGL	
C	Up top of rail dim.	07-10-06	JGL	

	Datum	Name
Bearb.	03.10.00	Terry
Geprf.	03.10.00	Pardellier
Norm.		

Ausg.
Datum
Massstab 1:1

HERETO PARTSLIST SHEET 01−02.

PANTOGRAPH WBR
Stromabnehmer WBR

Schunk Bahntechnik GmbH
Postfach 1234 · D-35382 Gießen

1−11320.5291
S10−00−5291

Blatt 01
01 B

Zust. | Änderung | Datum | Name | Urspr. | Ers. f. | Ers. durch

USB00000086_0801

Identif. E-T02067	Edition 00	Date 07.07.11

TECHNICAL SPECIFICATION

30kVA STATIC CONVERTER
750Vdc / 400Vac, 50Hz

Albatros, 7 y 9 (Pol. Ind. La Estación)
Teléfs. 91 495 70 00
Telefax 91 692 64 22
28320 PINTO (Madrid)

CONTROL OF EDITIONS AND MODIFICATIONS

EDITION	MODIFICATIONS
00	First edition

00	07.07.11			
		N. HERREROS	I. GONZALEZ	P. DE LA ANTONIA
EDITION	DATE	PREPARED	REVIEWED	APPROVED

This information is property of **SEPSA.** All rights reserved

I N D E X

1 PURPOSE 1
2 REFERENCE STANDARDS AND DOCUMENTS 1
3 EQUIPMENT MAIN FUNCTION 1
4 ELECTRICAL CHARACTERISTICS 2
4.1 D.C. Input Line 2
4.2 A.C. Output 2
4.3 Control input supply 2
4.4 Common Characteristics 2
5 OTHER CHARACTERISTICS 3
5.1 Temperature 3
5.2 Humidity 3
5.3 Dust 3
5.4 Shocks and Vibrations 3
5.5 Fire resistance and smoke emission 3
5.6 Noise level 4
5.7 Level of protection and cooling 4
6 RELIABILITY 4
7 ELECTRICAL CONSTRUCTION 4
8 MONITORING SOFTWARE DESCRIPTION 5
9 MECHANICAL CONSTRUCTION 6
10 DIMENSIONS AND WEIGHT 6
11 BLOCK DIAGRAM 7

1 PURPOSE

This specification defines the design characteristics, construction and installation of the 30kVA Static Converters.

Train	Coach Builder	Railway Administration
	CAF	Edinburgh Tramway

The design and manufacturing of the equipment is done under quality assurance ISO 9001. SEPSA is a registered enterprise.

2 REFERENCE STANDARDS AND DOCUMENTS

EN 50124	Railway applications. Insulation coordination. Part 1. Clearances and creepage distances for all electrical and electronic equipment.
EN 50125	Railway applications. Environmental conditions for equipment. Part 1: Equipment on board Rolling Stock.
EN 50155	Railway applications. Electronic Equipment used on rolling stock..
ENV 50121-3-2	Railway applications. Electromagnetic compatibility. Part 3-2: requirement for rolling stock apparatus
EN 50207	Railway applications. Electronic power converters for rolling stock.
IEC 60146	Semiconductor convertors
IEC 60310	Traction transformers and inductors
IEC 60411	Single phase traction power convertors.
IEC 60529	Classification of degrees of protection provided by enclosures
IEC 60571	Electronic equipment used on rail vehicles
IEC 61287	Electronic power converters installed on rolling stock
IEC 61373	Railway applications. Rolling stock equipment. Shock and vibration test.
MIL-HDBK-472	Maintainability Prediction.
NF F 16101	Comportement au feu. Choix des matériaux.
NF F 16102	Comportement au feu. Choix des matériaux, applications aux équipements électriques.
UTE C 80-810	Recueil de données de fiabilité des composants electroniques.

3 EQUIPMENT MAIN FUNCTION

The equipment function is to provide LV energy for the Tramway auxiliary systems. It takes the energy from the HV catenary line.

The converter supplies energy to the a.c. load.

The a.c. output is not electrically isolated from the input line.

In case of using three-phase induction motors as loads that represents at least a 10% of the total AC output (kW), these shall be designed under design H according to EN 60034-12:2002 standard or under design C according to NEMA MG1 standard.

4 ELECTRICAL CHARACTERISTICS

4.1 D.C. Input Line

Nominal voltage	:	750Vdc
Voltage range	:	500Vdc to 1000Vdc
Nominal current	:	37A
Maximum overvoltages	:	IEC 61287-1
Input filter resonant frequency	:	≤45Hz
Dielectric strength test from the input to the frame and rest of circuits	:	2.5kV, 50/60 Hz, 1 min

4.2 A.C. Output

Nominal voltage	:	400Vac ±10% at HV>570Vdc
Nominal frequency	:	50Hz ±2%
Phase number	:	3
Total harmonic distortion	:	<15%
Nominal Power	:	30kVA, 25kW
Transient Power	:	60kVA, power factor <0.5,10 s
Shortcircuit protection	:	Yes
Dielectric strength test from the input to the frame and rest of circuits	:	2.5kV, 50/60 Hz, 1 min

With an input voltage of >570Vdc the voltage and the output frequency will be decreased at 360Vac and 45Hz in order to maintain motor torque to the compressor motors.

4.3 Control input supply

Nominal voltage	:	24Vdc
Voltage range	:	16.8Vdc to 30Vdc
Consumption	:	<50W

As an option: There is a power supply from HV line to start the static converter in case of dead battery.

4.4 Common Characteristics

Efficiency	:	>90% from 50% to 100% of load
Start up time after input voltage gap	:	< 3 sec

5 OTHER CHARACTERISTICS

5.1 Temperature

Internal temperature from -20ºC to +80ºC

The equipment can operate at full power with an external temperature from -20ºC to 50ºC.

The equipment can operate at lower power with higher external temperatures.

5.2 Humidity

Relative humidity : 35% to 95%

5.3 Dust

The converter can work in an ambient with the following dust particle size and composition.

- ***Size***

  less than 200µm 100% in weight
  less than 80µm 90 ÷100% in weight
  less than 20µm 40 ÷ 90% in weight

- ***Composition***

  Variable, with possibility of metallic particles presence.

5.4 Shocks and Vibrations

The converter withstands the following vibrations and accelerations typical of the railway services (IEC 61287-1):

- Longitudinal acceleration : 5 g - 10ms
- Vertical acceleration : 3 g - 10ms
- Transversal acceleration : 3 g - 10ms
- Sinusoidal vibrations :

  frequency = 1 ÷ 10Hz amplitude = 25/f mm
  frequency = 10 ÷ 100Hz amplitude = $250/f^2$ mm

5.5 Fire resistance and smoke emission

The equipment complies with the standards NF F 16101 and NF F 16102 degree A1 (Trains for under tunnel service).

5.6 Noise level

The average noise level in all directions, at a distance of 1 m from the converter and under normal running conditions, is less than 72dB (curve A).

5.7 Level of protection and cooling

The equipment electronic components are contained in a watertight enclosure with a protection level IP 65 (IEC 60529). The semiconductors are mounted on earthed heatsinks.

The magnetic elements are located in a forced ventilated cabinet. The degree of protection of this cabinet is IP 24 (IEC 60529). The elements fitted in this compartment are protected against dust and water.

The needed air flow is 600m^3/h. The air is taken from the outside.

The heatsinks are forced ventilated but the semiconductors are located in the watertight enclosure.

6 RELIABILITY

The mean time between faults (MTBF) shall be 36000 hours based on the following standards MIL-HDBK-217, IEEE 500, CNET and on the experience of the equipment in service.

The mean time to repair (MTTR) shall be 1.5 hours.

7 ELECTRICAL CONSTRUCTION

See block diagram

- ***Input Fuse*** ***100A, 750V***

  A fuse is used to protect the equipment when the other electronic protections fail or in the case of input circuit failure.

  The fuse is external to the equipment and it is not included in our supply.

- ***Input Filter*** ***750Vdc***

  It is composed of a series inductor and a parallel capacitor. The filter functions are the following ones:

  - To reduce the ripple voltage present at the input
  - To limit the harmonics in the input current with a high impedance.
  - To protect against the overvoltages and voltage drops

- ***Modulated Inverter*** ***750Vdc / 400Vac, 50Hz***

  There is an IGBT inverter with sine modulation connected at the output of the filter.

  This circuit transforms the non stabilized d.c. into three-phase alternating current

  The low frequency harmonics are eliminated with the inverter modulation.

  The output voltage is also regulated by means of this modulation.

- ***Alternating current filter*** ***400Vac***

  Its function is to reduce the high frequency harmonics produced by the converter so that the specified harmonic distortion can be achieved.

  It is formed by a series reactor and parallel capacitors.

- ***Ventilation System***

  The necessary elements for the forced ventilation, as blower motor and protections, are included in the equipment.

- ***Control circuit***

  This is based on a 16-bit microprocessor. This circuit measures the input voltages, output voltages, output currents, as well as a series of internal variables of the converter and generates all of the commands for the semiconductors and the electromechanical elements.

  It also has a series of warning detectors. In the case of a fault, the state bits are recorded in the EEPROM memory so that they can be analysed later using a portable PC. This helps equipment maintenance.

  Interface signals:

  - One input (+24V) : start-up signal
  - One relay output (+24V) : spare
  - One relay output (+24V) : failure
  - One relay output (+24V) : correct output voltage

8 MONITORING SOFTWARE DESCRIPTION

The equipment is connected to the PC through RS 232 serial line. It runs under Windows 95, 98, Me, 20000 and XP operating systems.

The software is a user-friendly visual and graphic tool to help in the system servicing.

Monitoring Software Functions

➔ Real time monitoring

- Equipment Internal and external status signals
- Analog variables (currents, voltages, etc)
- Software version installed in the equipment
- Availability to Stop/Start the equipment
- Equipment reset when it is locked out
- Availability to store a PC monitoring session into a file for later analysis using the same graphic interface.

➔ Download of events logged in the Converter Control PCB to be shown on the screen. The equipment can store up to 250 events (depending on record length).

➔ Updating of Converter Control Software

9 MECHANICAL CONSTRUCTION

The equipment is contained in a box, and is made out with easily removable subassemblies which perform clearly defined electrical functions, in order to help equipment maintenance,

The converter box is a structure made of welded steel and painted.

The covers are made from steel.

The inner brackets and frames are made of steel or of fibre glass reinforced polyester when electrical isolation is needed.

The main semiconductors are mounted on aluminium heatsinks.

Transformers and inductors are mounted on shock absorbers to reduce the mechanical stress due to vibrations of the railway.

The converter is to be mounted rigidly (without shock-absorbers) to the vehicle.

10 DIMENSIONS AND WEIGHT

The equipment will be mounted on the roof.

The estimated dimensions and weight are:

Length	Width	Height	Weight
600 mm	1600 mm	470 mm	350 kg

Exact dimensions and fixings to be defined throughout the project.

11 BLOCK DIAGRAM

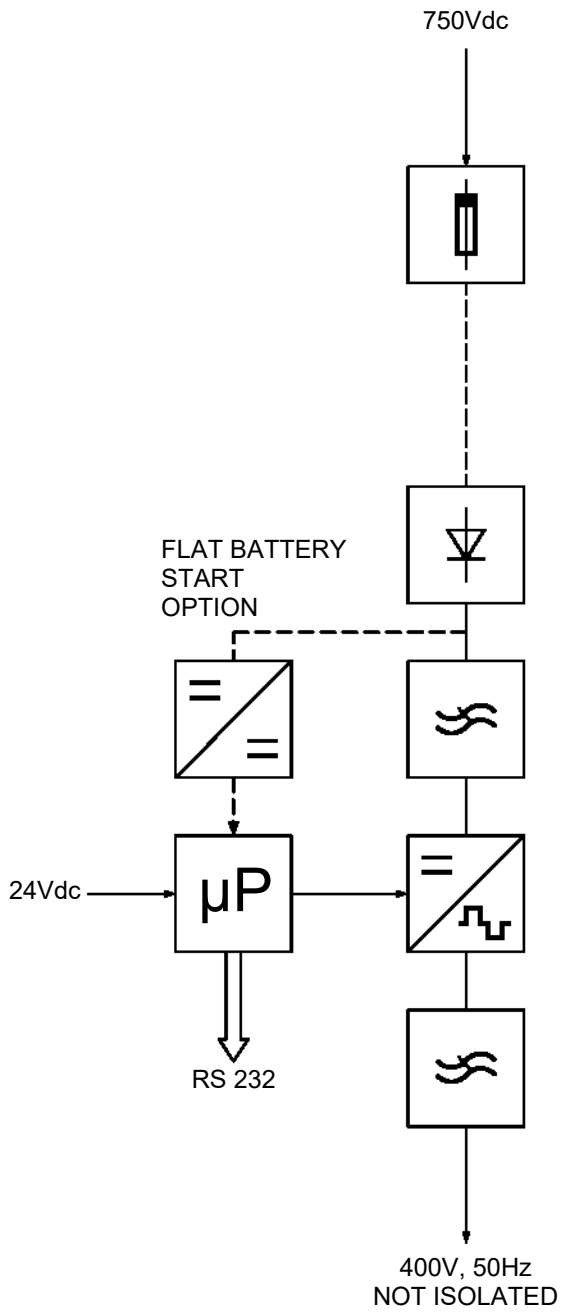

E-2067

Identif. E-T02068	Edition 00	Date 07.07.11

TECHNICAL SPECIFICATION

8kW BATTERY CHARGER
400Vac III 50Hz / 24Vdc

Albatros, 7 y 9 (Pol. Ind. La Estación)
Teléfs. 91 495 70 00
Telefax 91 692 64 22
28320 PINTO (Madrid)

CONTROL OF EDITIONS AND MODIFICATIONS

EDITION	MODIFICATIONS
00	First edition

00	07.07.11			
		N. HERREROS	I. GONZALEZ	P. DE LA ANTONIA
EDITION	DATE	PREPARED	REVIEWED	APPROVED

This information is property of **SEPSA.** All rights reserved

I N D E X

1 PURPOSE 1
2 REFERENCE STANDARDS AND DOCUMENTS 1
3 EQUIPMENT MAIN FUNCTION 1
4 ELECTRICAL CHARACTERISTICS 2
4.1 A.C. Input Line 2
4.2 D.C. Output 2
4.3 Control input supply 2
4.4 Common Characteristics 2
5 OTHER CHARACTERISTICS 2
5.1 Temperature 2
5.2 Humidity 3
5.3 Dust 3
5.4 Shocks and Vibrations 3
5.5 Fire resistance and smoke emission 3
5.6 Noise level 3
5.7 Level of protection and cooling 4
6 RELIABILITY 4
7 ELECTRICAL CONSTRUCTION 4
8 MECHANICAL CONSTRUCTION 5
9 DIMENSIONS AND WEIGHT 5
10 BLOCK DIAGRAM 6

1 PURPOSE

This specification defines the design characteristics, construction and installation of the 8kW Battery Chargers.

Train	Coach Builder	Railway Administration
	CAF	Edinburgh Tramway

The design and manufacturing of the equipment is done under quality assurance ISO 9001. SEPSA is a registered enterprise.

2 REFERENCE STANDARDS AND DOCUMENTS

EN 50124	Railway applications. Insulation coordination. Part 1. Clearances and creepage distances for all electrical and electronic equipment.
EN 50125	Railway applications. Environmental conditions for equipment. Part 1: Equipment on board Rolling Stock.
EN 50155	Railway applications. Electronic Equipment used on rolling stock.
ENV 50121-3-2	Railway applications. Electromagnetic compatibility. Part 3-2: requirement for rolling stock apparatus
EN 50207	Railway applications. Electronic power converters for rolling stock.
IEC 60146	Semiconductor convertors
IEC 60310	Traction transformers and inductors
IEC 60411	Single phase traction power convertors.
IEC 60529	Classification of degrees of protection provided by enclosures
IEC 60571	Electronic equipment used on rail vehicles
IEC 61287	Electronic power converters installed on rolling stock
IEC 61373	Railway applications. Rolling stock equipment. Shock and vibration test.
MIL-HDBK-472	Maintainability Prediction.
NF F 16101	Comportement au feu. Choix des matériaux.
NF F 16102	Comportement au feu. Choix des matériaux, applications aux équipements électriques.
UTE C 80-810	Recueil de données de fiabilité des composants electroniques.

3 EQUIPMENT MAIN FUNCTION

The equipment function is to provide LV energy for the Tramway auxiliary systems. It takes the energy from the 400Vac line of static converter.

The converter supplies energy to the d.c. load and battery charging.

The outputs are electrically isolated from the input line.

4 ELECTRICAL CHARACTERISTICS

4.1 A.C. Input Line

Nominal voltage	:	400Vac
Voltage range	:	360Vac to 440Vac
Nominal frequency	:	50Hz
Input voltage waveform	:	sinusoidal
Nominal current	:	18A
Power factor	:	≈0.8
Dielectric strength test from the input to the frame and rest of circuits	:	2.5kV, 50/60 Hz, 1 min

4.2 D.C. Output

Floating voltage	:	28.9Vdc
Voltage stability	:	±1%
Voltage adjustment	:	±5%
Ripple voltage	:	<1% rms
Maximum current limit	:	277A
Battery current limit	:	TBD
Permanent Power	:	8kW
Shortcircuit protection	:	Yes
Dielectric strength test from the output to the frame and rest of circuits	:	0.5kV, 50/60 Hz, 1 min

4.3 Control input supply

Nominal voltage	:	400Vac
Consumption	:	50W

4.4 Common Characteristics

Efficiency	:	>80% at 100% of load

5 OTHER CHARACTERISTICS

5.1 Temperature

Internal temperature from -20ºC to +80ºC

The equipment can operate at full power with an external temperature from -20ºC to 50ºC.

The equipment can operate at lower power with higher external temperatures.

5.2 Humidity

Relative humidity : 35% to 95%

5.3 Dust

The converter can work in an ambient with the following dust particle size and composition.

- ***Size***

  less than 200μm 100% in weight
  less than 80μm 90 ÷100% in weight
  less than 20μm 40 ÷ 90% in weight

- ***Composition***

  Variable, with possibility of metallic particles presence.

5.4 Shocks and Vibrations

The equipment withstands the following vibrations and accelerations typical of the railway services (IEC 61287-1):

- Longitudinal acceleration : 5 g - 10ms
- Vertical acceleration : 3 g - 10ms
- Transversal acceleration : 3 g - 10ms
- Sinusoidal vibrations :

  frequency = 1 ÷ 10Hz amplitude = 25/f mm
  frequency = 10 ÷ 100Hz amplitude = $250/f^2$ mm

5.5 Fire resistance and smoke emission

The equipment complies with the standards NF F 16101 and NF F 16102 degree A1 (Trains for under tunnel service).

5.6 Noise level

The average noise level in all directions, at a distance of 1 m from the converter and under normal running conditions, is less than 70dB (curve A).

5.7 Level of protection and cooling

The equipment electronic components are contained in a watertight enclosure with a protection level IP 65 (IEC 60529). The semiconductors are mounted on earthed heatsinks.

The magnetic elements are located in a forced ventilated cabinet. The degree of protection of this cabinet is IP 24 (IEC 60529). The elements fitted in this compartment are protected against dust and water.

The needed air flow is 500m^3/h. The air is taken from the outside.

The heatsinks are forced ventilated but the semiconductors are located in the watertight enclosure.

6 RELIABILITY

The mean time between faults (MTBF) shall be 80000 hours based on the following standards MIL-HDBK-217, IEEE 500, CNET and on the experience of the equipment in service.

The mean time to repair (MTTR) shall be 2 hours.

7 ELECTRICAL CONSTRUCTION

See block diagram

- ***Input circuit breaker*** ***60A, 500V***

  A circuit breaker is used to protect the equipment when the other electronic protections fail or in the case of input circuit failure.

  The circuit breaker is external to the equipment and it is not included in our supply.

- ***Isolation transformer*** ***400Vac / 27Vac***

  A transformer with 1 secondary adapts the voltage level between the input and output.

  It also provides the electrical isolation necessary among the different circuits.

- ***Rectifier*** ***27Vac / 24Vdc***

  It is supplied from an output of the transformer. It provides a d.c. regulated voltage.

  It is based on a controlled rectifier and an output filter.

- ***Ventilation System***

  The necessary elements for the forced ventilation, as blower motor and protections, are included in the equipment.

- ***Control circuit***

  This is based on electronic circuits of conventional software. This circuit measures the input voltages, output voltages, output currents, as well as a series of internal variables of the converter and generates all of the commands for the semiconductors and the electromechanical elements.

8 MECHANICAL CONSTRUCTION

The equipment is contained in a box, and is made out with easily removable subassemblies which perform clearly defined electrical functions, in order to help equipment maintenance,

The converter box is a structure made of welded steel and painted.

The covers are made from steel.

The inner brackets and frames are made of steel or of fibre glass reinforced polyester when electrical isolation is needed.

The main semiconductors are mounted on aluminium heatsinks.

Transformers and inductors are mounted on shock absorbers to reduce the mechanical stress due to vibrations of the railway.

The converter is to be mounted rigidly (without shock-absorbers) to the vehicle.

9 DIMENSIONS AND WEIGHT

The equipment will be mounted on the roof

The estimated dimensions and weight are:

Length	Width	Height	Weight
550 mm	850 mm	480 mm	200 kg

Exact dimensions and fixings to be defined throughout the project.

10 BLOCK DIAGRAM

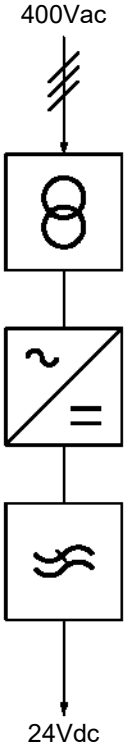

E-2068

INCT Innovative Noise Control Technologies

Applications for S&V wheel absorber on resilent wheels

Vehicle: Gt4 / SSB

8 absorber per wheel

Fixing holes 24 x M8

Pitch circle diameter 566 mm

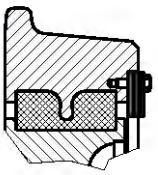

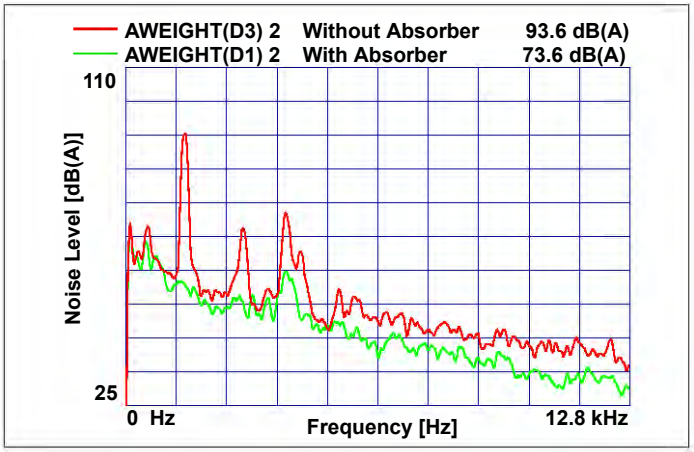

Vehicle: K4000 / KVB

4 absorber per wheel

Fixing holes 16 x M8

Pitch circle diameter 510 mm

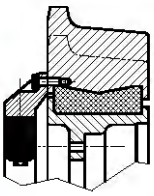

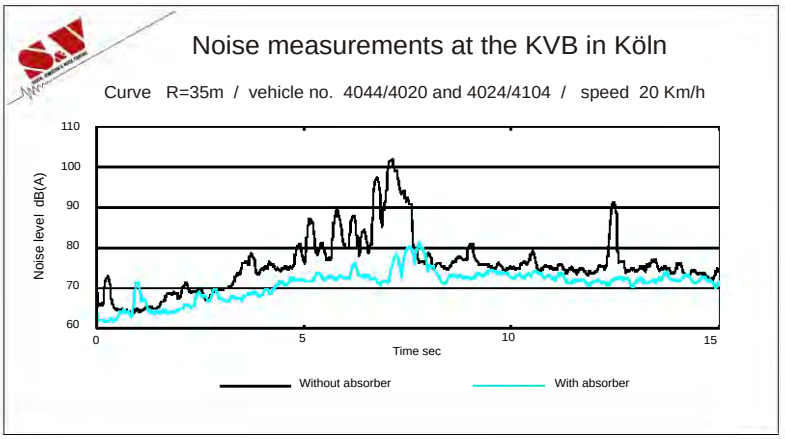

Vehicle: CITADIS / Orléans

4 absorber per wheel

Fixing holes 16 x M8

Pitch circle diameter 492 mm

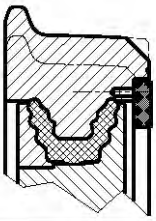

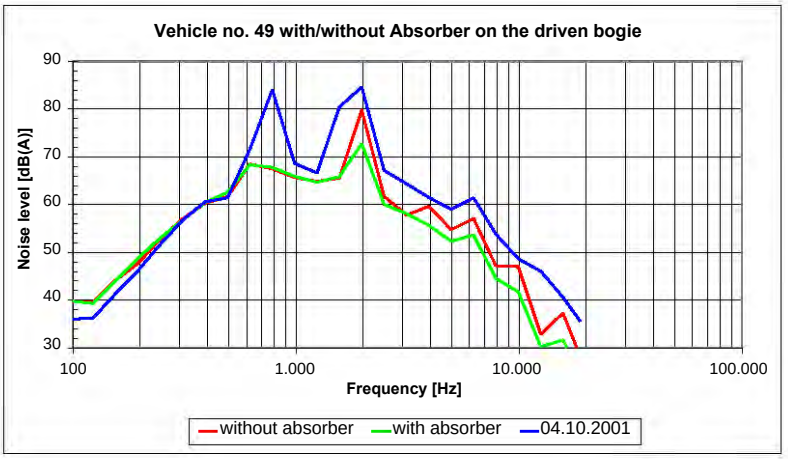

Schrey & Veit GmbH Zotzenheimer Str. 42 D-55576 Sprendlingen Tel. +49 6701 / 960170 Fax +49 6701 / 960171 www.sundv.de

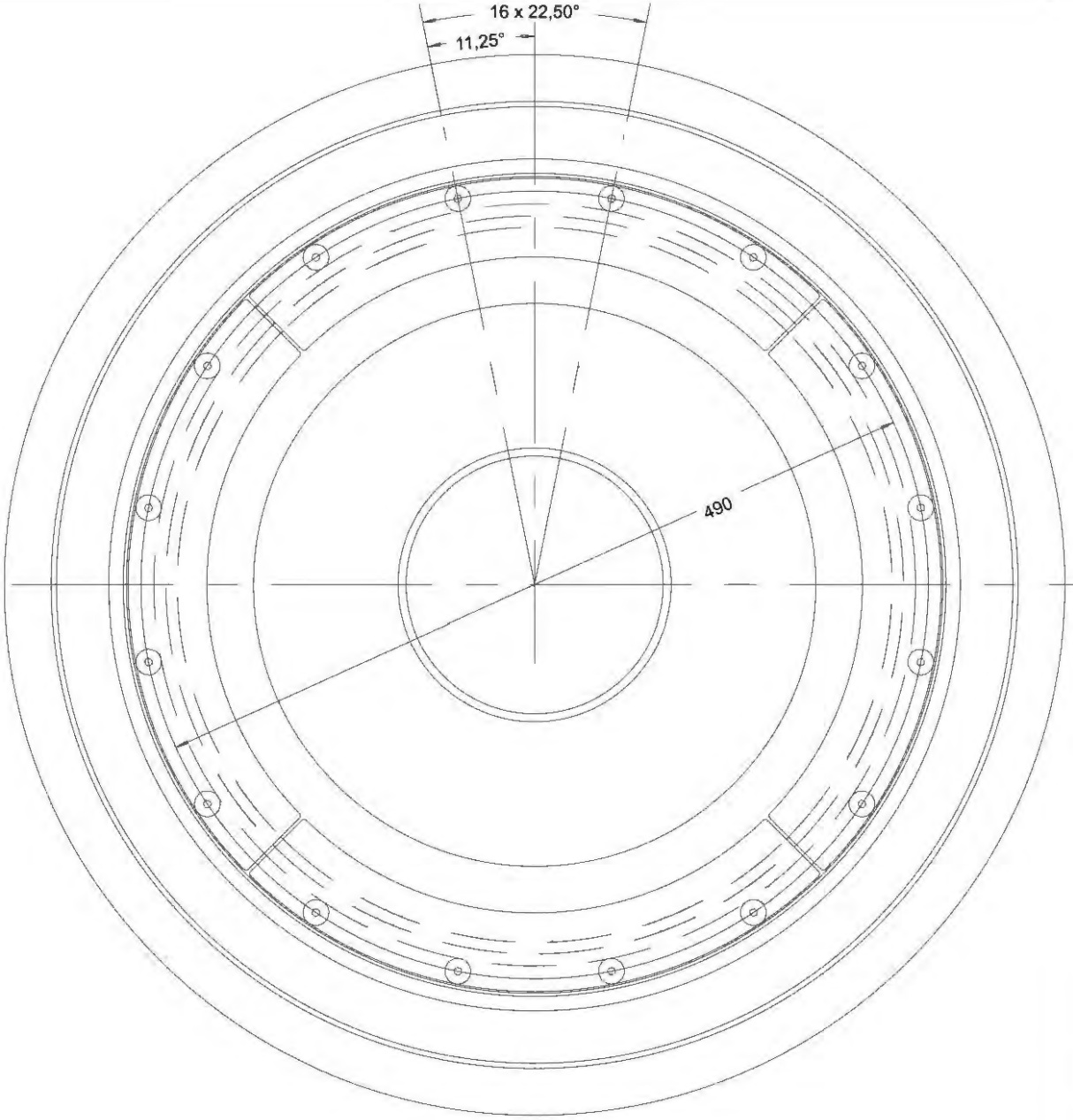

Ansicht A

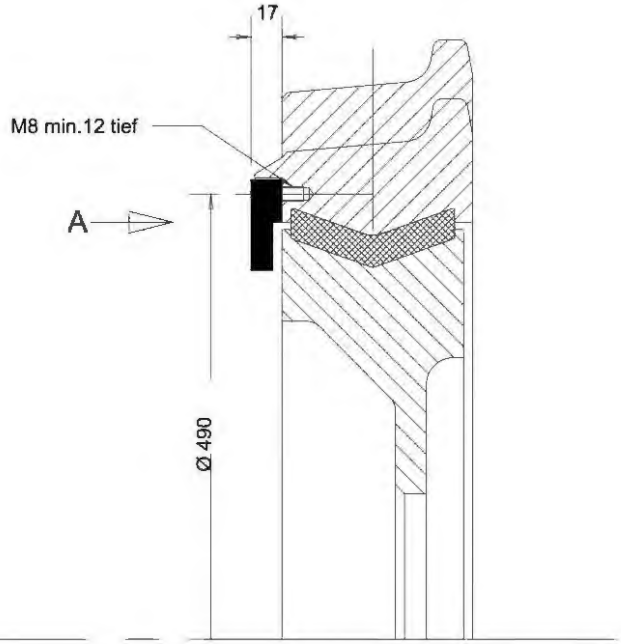

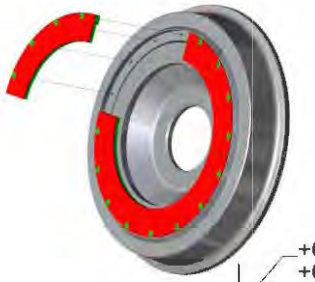

+0,5
+0,1

-0,1
-0,5

Schutzvermerk n. DIN 34 beachten

Werkstückkanten n. DIN 6784

(Zul. Abw.) Freimaßtoleranz DIN 7168-m	(Oberfläche) 6,3	(Maßstab) 1:4	(Gewicht)
		(Werkstoff)	(Oberflächenbehandlung)
	Datum / Name	(Benennung) Wheel Ø 610 Rotterdam	
Bearb.	22.08.04 / Jung		
Gepr.			
Norm			
Schrey & Veit GmbH, Zotzenheimerstr. 42, D-55576 Sprendlingen		(Zeichnungsnummer) 3-300319-1 USB00000086_0822	Blatt 1 / Blätter
		Ers. für:	Ers. durch:

Customer reference list for S&V Vibration Absorber

ADtranz GmbH
Wheel absorber for S-Bahn Berlin, Absorber to reduce gear noise of a metro

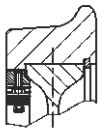

Bayerische Zugspitzbahn AG
Wheel absorber for DTW

Bochumer Verein Verkehrstechnik GmbH
Wheel absorber for trams of ADtranz

BOMBARDIER *TRANSPORTATION*
Wheel absorber for trams of Cologne (K4000), INCENTRO Nottingham

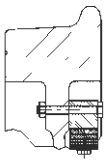

BONATRANS a.s.
Wheel absorber for locomotives

BVZ Zermatt-Bahn
Wheel absorber for coaches

HSL / NL Zermatt-Bahn
Absorber for the new highspeed line Amsterdam-Paris

MOB Montreux-Oberland Bernois
Wheel absorber for observation coaches, locomotives,
driving trailers and railcars.

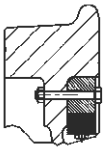

NS Technisch Onderzoek
Rail absorber for tracks in Roosendaal and Roermond / NL

Orléans
Wheel absorber for trams CITADIS / Alstom

ÖBB Österreichische Bundesbahnen
Absorber for a railway steel bridge in Vienna

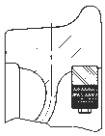

Radsatzfabrik Ilsenburg GmbH
Wheel absorber for Project "Low Noise Train" and “Appenzeller” Railway

RET Rotterdam
Wheel absorber for trams of Rotterdam CITADIS / Alstom

ROUES ET TRAINS MONTES RTM S.A.
High temperature absorber for freight cars of the Dolomiet Shuttle

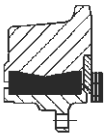

S-Bahn Berlin
Wheel absorber VICON-RSI for new vehicles BR 481/482

Siemens AG
Wheel absorber for the new Combino Tram of Amsterdam

Siemens Transportation Systems
Wheel absorber VICON-RASA for locomotive RH1016/1116 for die ÖBB and DB AG

SNCF
Rail damper and absorber for steel bridges

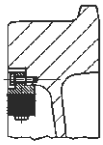

Stadler Bussnang AG
Wheel absorber VICON-RASA for coaches of AOMC in Aigle, BVB in Bex, BVZ in Visp und others

Stuttgarter Straßenbahnen AG
Wheel absorber VICON-RASA for old and new trams /GT4, DT8.8 and DT8.10 and the rack railway

WILSON, IHRIG & ASSOCIATES, INC.
Rail absorber for TCRP C3A Project in Portland

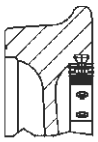

Total number of S&V absorber systems in practical operation:

Blockabsorber VICON-RASA	46.200 units on 8.250 wheels
New absorber system VICON-RSA(I)	8.250 units on 2.740 wheels
Rail and bridge absorber VICON-AMSA	31.550 units

Customer reference list for other applications:

Dornier GmbH, Dornier Luftfahrt, FairchildDornier, EADS LFK-Lenkflugkörpersysteme, HDW Howaltswerke-Deutsche Werft GmbH, Loggers, Noske-Kaeser, SEL Verteidigungssysteme, Socitec, Siemens Krauss-Maffei, ThyssenKrupp Marine Systems, Valeo Klimasysteme, ZEPPELIN Luftschifftechnik.